UNITED STATES PATENT AND TRADEMARK OFFICE

UNITED STATES DEPARTMENT OF COMMERCE
United States Patent and Trademark Office
Address: COMMISSIONER FOR PATENTS
P.O. Box 1450
Alexandria, Virginia 22313-1450
www.uspto.gov

APPLICATION NO.	FILING DATE	FIRST NAMED INVENTOR	ATTORNEY DOCKET NO.	CONFIRMATION NO.
16/900,963	06/14/2020	Pouya Taaghol	TAAG001CONT1	2579

112449 7590 08/12/2024
Roark IP
1438 Dahlia Loop
San Jose, CA 95126

EXAMINER
HIGA, BRENDAN Y

ART UNIT	PAPER NUMBER
2441	

MAIL DATE	DELIVERY MODE
08/12/2024	PAPER

Please find below and/or attached an Office communication concerning this application or proceeding.

The time period for reply, if any, is set in the attached communication.

PTOL-90A (Rev. 04/07)

Response to the Request for Certificate of Correction	Patent No. 10893095	Applicant(s) Taaghol et al.
	Issue Date 01/12/2021	Docket No. TAAG001CONT1

This is in response to the request for a Certificate of Correction filed 01 December 2022

☑ **Request Denied** - Consideration has been given to your request for the issuance of a Certificate of Correction under the provisions of 37 CFR 1.322 and/or 37 CFR 1.323. The Request is improper and denied for the reason(s) below:

1. ☑ Assignees' names and addresses (assignment data) printed in a patent, are based solely on information supplied in the appropriate space for identifying the assignment data on the Issue Fee Transmittal Form (PTOL-85b). Any request for a patent to be corrected to state the name of the assignee, must state that the assignment was submitted for recordation as set forth in in 37 CFR 3.11 before issuance of the patent. Petition under 3.81 is to be filed for consideration of correction to assignee. The petition fee set forth in 37 CFR 1.17(i)(1) (currently $140, $70, $35 for large, small and micro entities, respectively.

2. ☐ The alleged error in _____, is in fact an Amendment and/or Change made by the examiner and considered to be in accordance with the permissible amendments enumerated in the Manual of Patent Examining Procedure (MPEP) Section 1302.04. Applicant did not file objection or amendment under 37 CFR 1.312 prior to payment of the issue fee.

3. ☐ A petition under CFR 1.182 is required to correct the alleged errors in spelling or order of inventor's names, since inventor's names are printed solely in accordance with the type-written names, and in the order of the type-written names on the Application Data Sheet (ADS). The required fee currently under rule 1.17(f) (small entity $200, large entity $400, micro entity fee $100).

4. ☐ With respect to the alleged error in changing the inventor name on the patent due to clerical error in ADS/OATH of related patents. The inventors name is printed in accordance with the OATH/ADS submitted at the time of filing the application. However, your attention is directed to C.F.R. 1.324, wherein a request is being made to change, add or delete inventor(s), after issuance of the patent.

5. ☐ With respect to the alleged error in _____, comparison of the printed patent with the corresponding location in the application file reveals that there is no discrepancy.

6. ☐ With respect to 37 CFR 1.72, the title should be brief but technically accurate and descriptive and should contain fewer than 500 characters. Inasmuch as the words "new," "improved," "improvement of," and "improvement in" are not considered as part of the title of an invention, these words should not be included at the beginning of the title of the invention and will be deleted when the Office enters the title into the Offices computer records, and when any patent issues.

7. ☐ The fee for correction under 37 CFR 1.323 is set forth in 37 CFR 1.20(a). ☐ Partial fee ☐ No fee was received with your request. Full fee payment is required before further action is taken on this request.

8. ☐ With respect to the request for corrected Letters Patent (Grant), corrections to the original Letters Patent are made under the provisions of Rule 1.322(b), not Rule1.323, unless a petition is granted.

9. ☐ Other Comments: _____

Further correspondence concerning this matter should be filed and directed to the Certificates of Correction Branch.

Legal Instrument Examiner: /ENNIS L YOUNG/ Phone: (571)272-3435
LIE, ODMENNIS L YOUNG
Certificates of Correction Branch email: CustomerServiceCoC@uspto.gov CoC Central Phone Number: (703)756-1814

If applicable, information regarding a petition under 37 CFR 1.183 should be directed to the attention of the Commissioner for Patents using the FAX number (571) 273-8300

IN THE UNITED STATES PATENT AND TRADEMARK OFFICE

Patent No.: 10,893,095

Issued: January 12, 2021

In re Application of: Taaghol

Serial No.: 16/900,963

Filed: June 14, 2020

Attorney Docket No.: TAAGCONT1

For: DISTRIBUTED SOFTWARE DEFINED NETWORKING

Attention: Office of Petitions
Commissioner for Patents
PO Box 1450
Alexandria, VA 22313-1450

REQUEST UNDER 37 CFR §1.323 FOR CORRECTION DUE TO APPLICANT'S MISTAKE

Applicant hereby requests, pursuant to 37 CFR §1.323, that a new cover sheet be issued to correct Applicant's mistake with regard to the named Assignee on the cover of the patent.

The Assignee should be "Big Data Federation, Inc." and not "Acceptto Corporation". The error is a clerical error. The clerical error is apparent when the corrected patent cover sheet (attached) is compared with the assignment documents (attached). Applicant's attorney filled in the wrong name of the Assignee when paying the issue fee on the PTO-85B form filed on 12/1/2020 (attached).

The error occurred in good faith. Correction thereof does not involve such changes in the patent as would constitute new matter or would require re-examination. A certificate of correction is requested.

Submitted also is Form PTO/SB/44, suitable for printing. Please send the Certificate to the undersigned attorney at the address that appears below.

The required fee of $160.00 pursuant to 37 CFR 1.20(a) is being electronically submitted with this filing.

Respectfully submitted,
ROARK IP

By: /Christopher J. Horgan/

Christopher J. Horgan
Registration No. 40,394
1438 Dahlia Loop
San Jose, CA 95126
Telephone: (408) 687-8306

Date: December 1, 2022

US010893095B1

(12) **United States Patent**
Taaghol et al.

(10) **Patent No.: US 10,893,095 B1**
(45) **Date of Patent: *Jan. 12, 2021**

(54) **DISTRIBUTED SOFTWARE DEFINED NETWORKING**

(71) Applicant: **Big Data Federation, Inc.**, Santa Clara, CA (US)

(72) Inventors: **Pouya Taaghol**, San Jose, CA (US); **Vivek Ramanna**, San Jose, CA (US)

(73) Assignee: ~~**Acceptto Corporation**, Portland, OR (US)~~
Big Data Federation, Inc., San Jose, CA (US)

(*) Notice: Subject to any disclaimer, the term of this patent is extended or adjusted under 35 U.S.C. 154(b) by 0 days.

This patent is subject to a terminal disclaimer.

(21) Appl. No.: **16/900,963**

(22) Filed: **Jun. 14, 2020**

Related U.S. Application Data

(63) Continuation of application No. 15/836,824, filed on Dec. 9, 2017, now Pat. No. 10,686,871, which is a

(Continued)

(51) **Int. Cl.**
H04L 29/08 (2006.01)
G06F 9/4401 (2018.01)

(Continued)

(52) **U.S. Cl.**
CPC ***H04L 67/10*** (2013.01); ***G06F 9/4406*** (2013.01); ***G06F 21/44*** (2013.01); ***G06F 21/53*** (2013.01); ***G06F 21/57*** (2013.01); ***H04L 9/0822*** (2013.01); ***H04L 29/08135*** (2013.01); ***H04L 29/08459*** (2013.01); ***H04L 41/042*** (2013.01); ***H04L 41/0803*** (2013.01); ***H04L 41/0893*** (2013.01); ***H04L 45/563*** (2013.01); ***H04L 45/64*** (2013.01); ***H04L 63/0227*** (2013.01); ***H04L 67/1076*** (2013.01); ***H04L 67/34*** (2013.01); ***G06F 8/60*** (2013.01); ***G06F 8/70*** (2013.01); ***G06F 2009/45575*** (2013.01); ***G06F 2009/45587*** (2013.01); ***H04L 41/082*** (2013.01);

(Continued)

(58) **Field of Classification Search**
CPC G06F 8/60–61; G06F 8/65; G06F 8/70–71; G06F 8/76; G06F 9/4406; G06F 9/45533–45558; G06F 21/44–253; G06F 2009/45562–45595; H04L 9/08–0819; H04L 29/08135; H04L 29/0845–08459; H04L 41/08–082; H04L 41/0866–0893; H04L 41/45; H04L 41/563; H04L 41/64; H04L 63/0218; H04L 67/10; H04L 67/1074–1087
See application file for complete search history.

(56) **References Cited**

U.S. PATENT DOCUMENTS

7,114,021 B2 9/2006 Seshadri
7,630,706 B2 12/2009 Weigand

(Continued)

Primary Examiner — Brendan Y Higa
(74) *Attorney, Agent, or Firm* — Roark IP

(57) **ABSTRACT**

The Distributed Software Defined Network (dSDN) disclosed herein is an end-to-end architecture that enables secure and flexible programmability across a network with full lifecycle management of services and infrastructure applications (fxDeviceApp). The dSDN also harmonizes application deployment across the network independent of the hardware vendor. As a result, the dSDN simplifies the network deployment lifecycle from concept to design to implementation to decommissioning.

18 Claims, 18 Drawing Sheets

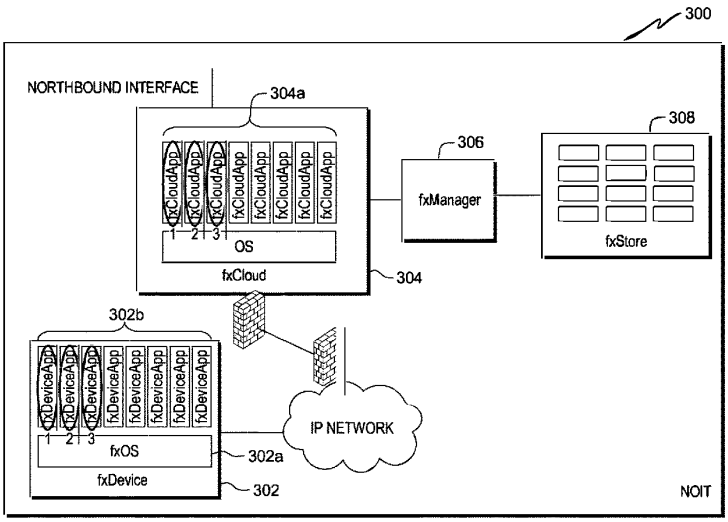

PATENT ASSIGNMENT COVER SHEET

Electronic Version v1.1
Stylesheet Version v1.2

EPAS ID: PAT3340286

SUBMISSION TYPE:	NEW ASSIGNMENT
NATURE OF CONVEYANCE:	ASSIGNMENT

CONVEYING PARTY DATA

Name	Execution Date
VIVEK RAMANNA	06/02/2014

RECEIVING PARTY DATA

Name:	POUYA TAAGHOL
Street Address:	1260 TRESTLEWOOD LANE
City:	SAN JOSE
State/Country:	CALIFORNIA
Postal Code:	95138

PROPERTY NUMBERS Total: 1

Property Type	Number
Application Number:	14295331

CORRESPONDENCE DATA

Fax Number:

Correspondence will be sent to the e-mail address first; if that is unsuccessful, it will be sent using a fax number, if provided; if that is unsuccessful, it will be sent via US Mail.

Phone:	408-687-8306
Email:	PRESTONIANPATENTS@GMAIL.COM
Correspondent Name:	CHRISTOPHER J. HORGAN
Address Line 1:	1438 DAHLIA LOOP
Address Line 2:	PRESTONIAN IP
Address Line 4:	SAN JOSE, CALIFORNIA 95126

ATTORNEY DOCKET NUMBER:	TAAG001
NAME OF SUBMITTER:	CHRISTOPHER J. HORGAN
SIGNATURE:	/Christopher J. Horgan/
DATE SIGNED:	05/05/2015

Total Attachments: 2

source=14295331_ASSIGNMENT_RECORDATION#page1.tif
source=14295331_ASSIGNMENT_RECORDATION#page2.tif

Exhibit 1002
Microsoft Corporation v. Edge Networking Systems, LLC
006

Form PTO-1595 (Rev. 03-11)
OMB No. 0651-0027 (exp. 04/30/2015)

U.S. DEPARTMENT OF COMMERCE
United States Patent and Trademark Office

RECORDATION FORM COVER SHEET
PATENTS ONLY

To the Director of the U.S. Patent and Trademark Office: Please record the attached documents or the new address(es) below.

1. Name of conveying party(ies)
Vivek Ramanna

Additional name(s) of conveying party(ies) attached? ☐ Yes ☒ No

2. Name and address of receiving party(ies)
Name: Pouya Taaghol
Internal Address:
Street Address: 1260 Trestlewood Lane
City: San Jose
State: CA
Country: US Zip: 95138
Additional name(s) & address(es) attached? ☐ Yes ☒ No

3. Nature of conveyance/Execution Date(s):
Execution Date(s) June 2, 2014
☒ Assignment ☐ Merger
☐ Security Agreement ☐ Change of Name
☐ Joint Research Agreement
☐ Government Interest Assignment
☐ Executive Order 9424, Confirmatory License
☐ Other

4. Application or patent number(s): ☐ This document is being filed together with a new application.
A. Patent Application No.(s)
14/295,331
B. Patent No.(s)
Additional numbers attached? ☐ Yes ☒ No

5. Name and address to whom correspondence concerning document should be mailed:
Name: Christopher Horgan
Internal Address: Prestonian IP
Street Address: 1438 Dahlia Loop
City: San Jose
State: CA Zip: 95126
Phone Number: 408-687-8306
Docket Number: TAAG001
Email Address: prestonianpatents@gmail.com

6. Total number of applications and patents involved: 1

7. Total fee (37 CFR 1.21(h) & 3.41) $ 0
☐ Authorized to be charged to deposit account
☐ Enclosed
☐ None required (government interest not affecting title)

8. Payment Information
Deposit Account Number
Authorized User Name

9. Signature:
/Christopher J. Horgan/
Signature
May 5, 2015
Date
Christopher J. Horgan
Name of Person Signing
Total number of pages including cover sheet, attachments, and documents: 2

Documents to be recorded (including cover sheet) should be faxed to (571) 273-0140, or mailed to:
Mail Stop Assignment Recordation Services, Director of the USPTO, P.O.Box 1450, Alexandria, V.A. 22313-1450

ASSIGNMENT OF PATENT APPLICATION

WHEREAS, INVENTOR Vivek Ramanna, located at 549 Manhattan Place, San Jose, CA 95136, hereinafter referred to as "Assignor," is the inventor of the invention described and set forth in the below-identified application for United States Letters Patent:

Title of Invention: DISTRIBUTED SOFTWARE DEFINED NETWORK

Filing Date: N/A;

Application No.: N/A; and

WHEREAS, Pouya Taaghol, located at 1260 Trestlewood Lane, San Jose, CA 95138, hereinafter referred to as "ASSIGNEE," is desirous of acquiring all U.S. and foreign rights in the invention and application and in any Letters Patent and Registrations which may be granted on the same;

For good and valuable consideration, receipt of which is hereby acknowledged by Assignor, Assignor has assigned, and by these presents do assign to Assignee all right, title and interest in and to the invention and application and to all foreign counterparts (including patent, utility model and industrial designs), and in and to any Letters Patent and Registrations which may hereafter be granted on the same in the United States and all countries throughout the world, and to claim the priority from the application as provided by the Paris Convention or other applicable treaties. The right, title and interest is to be held and enjoyed by Assignee and Assignee's successors and assigns as fully and exclusively as it would have been held and enjoyed by Assignor had this Assignment not been made, for the full term of any Letters Patent and Registrations which may be granted thereon, or of any division, renewal, continuation in whole or in part, substitution, conversion, reissue, prolongation or extension thereof.

Assignor further agrees that he will, without charge to Assignee, but at Assignee's expense, (a) cooperate with Assignee in the prosecution of U.S. Patent applications and foreign counterparts on the invention and any improvements, (b) execute, verify, acknowledge and deliver all such further papers, including patent applications and instruments of transfer, and (c) perform such other acts as Assignee lawfully may request to obtain or maintain Letters Patent and Registrations for the invention and improvements in any and all countries, and to vest title thereto in Assignee, or Assignee's successors and assigns.

IN TESTIMONY WHEREOF, Assignor has signed his name on the date indicated.

Dated: 06/02/14

Vivek Ramanna

PATENT ASSIGNMENT COVER SHEET

Electronic Version v1.1
Stylesheet Version v1.2

EPAS ID: PAT5812396

SUBMISSION TYPE:	NEW ASSIGNMENT
NATURE OF CONVEYANCE:	ASSIGNMENT

CONVEYING PARTY DATA

Name	Execution Date
POUYA TAAGHOL	11/07/2019

RECEIVING PARTY DATA

Name:	BIG DATA FEDERATION, INC.
Street Address:	990 LINDEN DRIVE
Internal Address:	#220
City:	SANTA CLARA
State/Country:	CALIFORNIA
Postal Code:	95050

PROPERTY NUMBERS Total: 1

Property Type	Number
Patent Number:	9843624

CORRESPONDENCE DATA

Fax Number:

Correspondence will be sent to the e-mail address first; if that is unsuccessful, it will be sent using a fax number, if provided; if that is unsuccessful, it will be sent via US Mail.

Phone:	408-687-8306
Email:	chris.horgan@roarkip.com
Correspondent Name:	ROARK IP
Address Line 1:	1438 DAHLIA LOOP
Address Line 4:	SAN JOSE, CALIFORNIA 95126

ATTORNEY DOCKET NUMBER:	TAAG001
NAME OF SUBMITTER:	CHRISTOPHER J. HORGAN
SIGNATURE:	/Christopher J. Horgan/
DATE SIGNED:	11/08/2019

Total Attachments: 3

source=BIG DATA ASSIGNMENT#page1.tif
source=BIG DATA ASSIGNMENT#page2.tif
source=BIG DATA ASSIGNMENT#page3.tif

Exhibit 1002
Microsoft Corporation v. Edge Networking Systems, LLC
009

ASSIGNMENT

This Assignment made by **Pouya Taaghol,** hereinafter referred to as assignor, with an address of 1260 Trestlewood Lane, San Jose, CA 95138;

WITNESSETH: That,

WHEREAS, the patent application(s) and patent(s) (hereinafter "the patents"), which are listed in attached Exhibit A, are hereby assigned to the assignor; and

WHEREAS, **Big Data Federation, Inc. ("Big Data Federation"),** a corporation having a place of business at 990 Linden Drive, #220, Santa Clara, CA 95050, hereinafter referred to as assignee, has acquired the entire right, title and interest in and to the patents;

NOW, THEREFORE, To All Whom It May Concern, be it known that for good and valuable consideration, the receipt and sufficiency of which is hereby acknowledged, assignor hereby sells, assigns, agrees to assign, transfers, and sets over unto the said assignee, its successors and assigns, the entire right, title and interest in and to the patents, and in any and to any and all continuations, continuations-in-part, substitutions, divisions or reissues, and to all foreign counterparts (including patent, utility model and industrial designs) of the patents, the same to be held and enjoyed by the said assignee, for its interest, and for its own use and behalf, and the use and behalf of its successors and assigns, to the full end of the term for which the patents may be granted as fully and entirely as the same would have been held and enjoyed by assignor had this assignment and sale not been made.

And for the consideration aforesaid, assignor hereby covenants and agrees to and with the said assignee, its successors and assigns, that at the time of the execution and delivery of these presents assignor is the sole and lawful owner of the entire right, title and interest in and to the patents and that the same are unencumbered, and that assignor has good right and lawful authority to sell and convey the same in the manner herein set forth.

And for the consideration aforesaid, assignor hereby covenants and agrees to and with the said assignee, its successors and assigns, that assignor will, whenever its counsel or the counsel of its successors and assigns, learned in the law, shall advise that an amendment, division, continuation, continuation-in-part, or substitution of, or any other proceeding in connection with said application, including interference proceedings, is lawful and desirable, sign all papers and drawings, take all rightful oaths, and do all acts necessary or required to be done for the procurement of valid Letters Patent for said invention, or for the reissue of the same without charge to assignee, its successors or assigns, but at its expense.

Said sale, conveyance, assignment, and transfer includes, without limitation, the rights to enforce, assert, and sue for past, present, and future infringement of the patents, and the rights to recover and collect for past, present, and future damages related to the patents.

IN WITNESS WHEREOF, the parties cause this document to be signed on their behalves:

For Pouya Taaghol:

Nov 7, 2019

Date -

Pouya Taaghol, Individual

For Big Data Federation, Inc.

Nov 7, 2019

Date -

Pouya Taaghol, CEO

PATENT
REEL: 050963 FRAME: 0056

Exhibit 1002
Microsoft Corporation v. Edge Networking Systems, LLC
011

Exhibit A

Ref. No.	Title	Serial No,	Filing Date	Patent No.
TAAG001	DISTRIBUTED SOFTWARE DEFINED NETWORKING	14/295,331	6/4/2014	9,843,624
TAAG001CONT1	DISTRIBUTED SOFTWARE DEFINED NETWORKING	15/836,824	12/9/2017	
TAAG003	SYSTEM AND METHOD FOR PROCESSING OF INTERNET BIG DATA	14/964,537	12/9/2015	
TAAG004	SYSTEM AND METHOD OF USING INTERNET AND MOBILITY BIG DATA TO ANALYZE MACRO AND ECONOMIC INDICATORS	14/998,072	12/23/2015	

PART B - FEE(S) TRANSMITTAL

Complete and send this form, together with applicable fee(s), by mail or fax, or via EFS-Web.

By mail, send to: Mail Stop ISSUE FEE
Commissioner for Patents
P.O. Box 1450
Alexandria, Virginia 22313-1450

By fax, send to: (571)-273-2885

INSTRUCTIONS: This form should be used for transmitting the ISSUE FEE and PUBLICATION FEE (if required). Blocks 1 through 5 should be completed where appropriate. All further correspondence including the Patent, advance orders and notification of maintenance fees will be mailed to the current correspondence address as indicated unless corrected below or directed otherwise in Block 1, by (a) specifying a new correspondence address; and/or (b) indicating a separate "FEE ADDRESS" for maintenance fee notifications.

CURRENT CORRESPONDENCE ADDRESS (Note: Use Block 1 for any change of address)

112449 7590 11/13/2020
Roark IP
1438 Dahlia Loop
San Jose, CA 95126

Note: A certificate of mailing can only be used for domestic mailings of the Fee(s) Transmittal. This certificate cannot be used for any other accompanying papers. Each additional paper, such as an assignment or formal drawing, must have its own certificate of mailing or transmission.

Certificate of Mailing or Transmission

I hereby certify that this Fee(s) Transmittal is being deposited with the United States Postal Service with sufficient postage for first class mail in an envelope addressed to the Mail Stop ISSUE FEE address above, or being transmitted to the USPTO via EFS-Web or by facsimile to (571) 273-2885, on the date below.

(Typed or printed name)

(Signature)

(Date)

APPLICATION NO.	FILING DATE	FIRST NAMED INVENTOR	ATTORNEY DOCKET NO.	CONFIRMATION NO.
16/900,963	06/14/2020	Pouya Taaghol	TAAG001CONT1	2579

TITLE OF INVENTION: Distributed Software Defined Networking

APPLN. TYPE	ENTITY STATUS	ISSUE FEE DUE	PUBLICATION FEE DUE	PREV. PAID ISSUE FEE	TOTAL FEE(S) DUE	DATE DUE
nonprovisional	SMALL	$600	$0.00	$0.00	$600	02/15/2021

EXAMINER	ART UNIT	CLASS-SUBCLASS
HIGA, BRENDAN Y	2441	709-201000

1. Change of correspondence address or indication of "Fee Address" (37 CFR 1.363).

❑ Change of correspondence address (or Change of Correspondence Address form PTO/SB/122) attached.

❑ "Fee Address" indication (or "Fee Address" Indication form PTO/SB/47; Rev 03-09 or more recent) attached. **Use of a Customer Number is required.**

2. For printing on the patent front page, list
(1) The names of up to 3 registered patent attorneys or agents OR, alternatively,
(2) The name of a single firm (having as a member a registered attorney or agent) and the names of up to 2 registered patent attorneys or agents. If no name is listed, no name will be printed.

1 ROARK IP
2
3

3. ASSIGNEE NAME AND RESIDENCE DATA TO BE PRINTED ON THE PATENT (print or type)

PLEASE NOTE: Unless an assignee is identified below, no assignee data will appear on the patent. If an assignee is identified below, the document must have been previously recorded, or filed for recordation, as set forth in 37 CFR 3.11 and 37 CFR 3.81(a). Completion of this form is NOT a substitute for filing an assignment.

(A) NAME OF ASSIGNEE: Acceptto Corporation

(B) RESIDENCE: (CITY and STATE OR COUNTRY): Portland, OR

Please check the appropriate assignee category or categories (will not be printed on the patent) : ❑ Individual ❑ Corporation or other private group entity ❑ Government

4a. Fees submitted: ☒ Issue Fee ❑ Publication Fee (if required) ❑ Advance Order - # of Copies _____

4b. Method of Payment: *(Please first reapply any previously paid fee shown above)*

☒ Electronic Payment via EFS-Web ❑ Enclosed check ❑ Non-electronic payment by credit card (Attach form PTO-2038)

❑ The Director is hereby authorized to charge the required fee(s), any deficiency, or credit any overpayment to Deposit Account No. _____

5. **Change in Entity Status** (from status indicated above)

❑ Applicant certifying micro entity status. See 37 CFR 1.29

☒ Applicant asserting small entity status. See 37 CFR 1.27

❑ Applicant changing to regular undiscounted fee status.

NOTE: Absent a valid certification of Micro Entity Status (see forms PTO/SB/15A and 15B), issue fee payment in the micro entity amount will not be accepted at the risk of application abandonment.
NOTE: If the application was previously under micro entity status, checking this box will be taken to be a notification of loss of entitlement to micro entity status.
NOTE: Checking this box will be taken to be a notification of loss of entitlement to small or micro entity status, as applicable.

NOTE: This form must be signed in accordance with 37 CFR 1.31 and 1.33. See 37 CFR 1.4 for signature requirements and certifications.

Authorized Signature /Christopher J. Horgan/ Date 12/1/2020

Typed or printed name Christopher J. Horgan Registration No. 40,394

PTOL-85 Part B (08-18) Approved for use through 01/31/2020 OMB 0651-0033 U.S. Patent and Trademark Office; U.S. DEPARTMENT OF COMMERCE

Exhibit 1002
Microsoft Corporation v. Edge Networking Systems, LLC
013

PTO/SB/44 (09-07)
Approved for use through 03/31/2023. OMB 0651-0033
U.S. Patent and Trademark Office; U.S. DEPARTMENT OF COMMERCE
Under the Paperwork Reduction Act of 1995, no persons are required to respond to a collection of information unless it displays a valid OMB control number.
(Also Form PTO-1050)

UNITED STATES PATENT AND TRADEMARK OFFICE
CERTIFICATE OF CORRECTION

PATENT NO. : 10,893,095

APPLICATION NO.: 16/900,963

ISSUE DATE : January 12, 2021

INVENTOR(S) : Pouya Taaghol and Vivek Ramanna

It is certified that an error appears or errors appear in the above-identified patent and that said Letters Patent is hereby corrected as shown below:

On the cover of the patent, the Assignee should be changed from "Acceptto Corporation, Portland, OR (US)" to -- Big Data Federation, Inc., Santa Clara, CA (US) --.

MAILING ADDRESS OF SENDER (Please do not use Customer Number below):
Christopher J. Horgan, Reg. No. 40,394
ROARK IP
1438 Dahlia Loop, San Jose, CA 95126

This collection of information is required by 37 CFR 1.322, 1.323, and 1.324. The information is required to obtain or retain a benefit by the public which is to file (and by the USPTO to process) an application. Confidentiality is governed by 35 U.S.C. 122 and 37 CFR 1.14. This collection is estimated to take 1.0 hour to complete, including gathering, preparing, and submitting the completed application form to the USPTO. Time will vary depending upon the individual case. Any comments on the amount of time you require to complete this form and/or suggestions for reducing this burden, should be sent to the Chief Information Officer, U.S. Patent and Trademark Office, U.S. Department of Commerce, P.O. Box 1450, Alexandria, VA 22313-1450. DO NOT SEND FEES OR COMPLETED FORMS TO THIS ADDRESS. **SEND TO: Attention Certificate of Corrections Branch, Commissioner for Patents, P.O. Box 1450, Alexandria, VA 22313-1450.**

If you need assistance in completing the form, call 1-800-PTO-9199 and select option 2.

Privacy Act Statement

The **Privacy Act of 1974 (P.L. 93-579)** requires that you be given certain information in connection with your submission of the attached form related to a patent application or patent. Accordingly, pursuant to the requirements of the Act, please be advised that: (1) the general authority for the collection of this information is 35 U.S.C. 2(b)(2); (2) furnishing of the information solicited is voluntary; and (3) the principal purpose for which the information is used by the U.S. Patent and Trademark Office is to process and/or examine your submission related to a patent application or patent. If you do not furnish the requested information, the U.S. Patent and Trademark Office may not be able to process and/or examine your submission, which may result in termination of proceedings or abandonment of the application or expiration of the patent.

The information provided by you in this form will be subject to the following routine uses:

1. The information on this form will be treated confidentially to the extent allowed under the Freedom of Information Act (5 U.S.C. 552) and the Privacy Act (5 U.S.C 552a). Records from this system of records may be disclosed to the Department of Justice to determine whether disclosure of these records is required by the Freedom of Information Act.
2. A record from this system of records may be disclosed, as a routine use, in the course of presenting evidence to a court, magistrate, or administrative tribunal, including disclosures to opposing counsel in the course of settlement negotiations.
3. A record in this system of records may be disclosed, as a routine use, to a Member of Congress submitting a request involving an individual, to whom the record pertains, when the individual has requested assistance from the Member with respect to the subject matter of the record.
4. A record in this system of records may be disclosed, as a routine use, to a contractor of the Agency having need for the information in order to perform a contract. Recipients of information shall be required to comply with the requirements of the Privacy Act of 1974, as amended, pursuant to 5 U.S.C. 552a(m).
5. A record related to an International Application filed under the Patent Cooperation Treaty in this system of records may be disclosed, as a routine use, to the International Bureau of the World Intellectual Property Organization, pursuant to the Patent Cooperation Treaty.
6. A record in this system of records may be disclosed, as a routine use, to another federal agency for purposes of National Security review (35 U.S.C. 181) and for review pursuant to the Atomic Energy Act (42 U.S.C. 218(c)).
7. A record from this system of records may be disclosed, as a routine use, to the Administrator, General Services, or his/her designee, during an inspection of records conducted by GSA as part of that agency's responsibility to recommend improvements in records management practices and programs, under authority of 44 U.S.C. 2904 and 2906. Such disclosure shall be made in accordance with the GSA regulations governing inspection of records for this purpose, and any other relevant (*i.e.*, GSA or Commerce) directive. Such disclosure shall not be used to make determinations about individuals.
8. A record from this system of records may be disclosed, as a routine use, to the public after either publication of the application pursuant to 35 U.S.C. 122(b) or issuance of a patent pursuant to 35 U.S.C. 151. Further, a record may be disclosed, subject to the limitations of 37 CFR 1.14, as a routine use, to the public if the record was filed in an application which became abandoned or in which the proceedings were terminated and which application is referenced by either a published application, an application open to public inspection or an issued patent.
9. A record from this system of records may be disclosed, as a routine use, to a Federal, State, or local law enforcement agency, if the USPTO becomes aware of a violation or potential violation of law or regulation.

Electronic Patent Application Fee Transmittal

Application Number:	16900963
Filing Date:	14-Jun-2020
Title of Invention:	Distributed Software Defined Networking
First Named Inventor/Applicant Name:	Pouya Taaghol
Filer:	Christopher James Horgan
Attorney Docket Number:	TAAG001CONT1

Filed as Small Entity

Filing Fees for Utility under 35 USC 111(a)

Description	Fee Code	Quantity	Amount	Sub-Total in USD($)
Basic Filing:				
Pages:				
Claims:				
Miscellaneous-Filing:				
Petition:				
Patent-Appeals-and-Interference:				
Post-Allowance-and-Post-Issuance:				
CERTIFICATE OF CORRECTION	2811	1	160	160

Description	Fee Code	Quantity	Amount	Sub-Total in USD($)
Extension-of-Time:				
Miscellaneous:				
		Total in USD ($)		**160**

Electronic Acknowledgement Receipt	
EFS ID:	47130374
Application Number:	16900963
International Application Number:	
Confirmation Number:	2579
Title of Invention:	Distributed Software Defined Networking
First Named Inventor/Applicant Name:	Pouya Taaghol
Customer Number:	112449
Filer:	Christopher James Horgan
Filer Authorized By:	
Attorney Docket Number:	TAAG001CONT1
Receipt Date:	01-DEC-2022
Filing Date:	14-JUN-2020
Time Stamp:	23:32:11
Application Type:	Utility under 35 USC 111(a)

Payment information:

Submitted with Payment	yes
Payment Type	CARD
Payment was successfully received in RAM	$160
RAM confirmation Number	E2022B1N34380112
Deposit Account	
Authorized User	
The Director of the USPTO is hereby authorized to charge indicated fees and credit any overpayment as follows:	

File Listing:

Document Number	Document Description	File Name	File Size(Bytes)/ Message Digest	Multi Part /.zip	Pages (if appl.)
1	Petition for review by the Office of Petitions	TAAG001CONT1_PETITION_CORRECTION_____.pdf	946032 c2acd7f9d99146b4bb7db61541fbc3def97651aa	no	13
Warnings:					
Information:					
2	Fee Worksheet (SB06)	fee-info.pdf	37898 da4b41884f0665a3cc47590753b5eb7c1f1e153a	no	2
Warnings:					
Information:					
		Total Files Size (in bytes):	983930		

This Acknowledgement Receipt evidences receipt on the noted date by the USPTO of the indicated documents, characterized by the applicant, and including page counts, where applicable. It serves as evidence of receipt similar to a Post Card, as described in MPEP 503.

<u>New Applications Under 35 U.S.C. 111</u>
If a new application is being filed and the application includes the necessary components for a filing date (see 37 CFR 1.53(b)-(d) and MPEP 506), a Filing Receipt (37 CFR 1.54) will be issued in due course and the date shown on this Acknowledgement Receipt will establish the filing date of the application.
<u>National Stage of an International Application under 35 U.S.C. 371</u>
If a timely submission to enter the national stage of an international application is compliant with the conditions of 35 U.S.C. 371 and other applicable requirements a Form PCT/DO/EO/903 indicating acceptance of the application as a national stage submission under 35 U.S.C. 371 will be issued in addition to the Filing Receipt, in due course.
<u>New International Application Filed with the USPTO as a Receiving Office</u>
If a new international application is being filed and the international application includes the necessary components for an international filing date (see PCT Article 11 and MPEP 1810), a Notification of the International Application Number and of the International Filing Date (Form PCT/RO/105) will be issued in due course, subject to prescriptions concerning national security, and the date shown on this Acknowledgement Receipt will establish the international filing date of the application.

UNITED STATES PATENT AND TRADEMARK OFFICE

UNITED STATES DEPARTMENT OF COMMERCE
United States Patent and Trademark Office
Address: COMMISSIONER FOR PATENTS
P.O. Box 1450
Alexandria, Virginia 22313-1450
www.uspto.gov

APPLICATION NO.	ISSUE DATE	PATENT NO.	ATTORNEY DOCKET NO.	CONFIRMATION NO.
16/900,963	01/12/2021	10893095	TAAG001CONT1	2579

112449 7590 12/22/2020

Roark IP
1438 Dahlia Loop
San Jose, CA 95126

ISSUE NOTIFICATION

The projected patent number and issue date are specified above.

Determination of Patent Term Adjustment under 35 U.S.C. 154 (b)
(application filed on or after May 29, 2000)

The Patent Term Adjustment is 0 day(s). Any patent to issue from the above-identified application will include an indication of the adjustment on the front page.

If a Continued Prosecution Application (CPA) was filed in the above-identified application, the filing date that determines Patent Term Adjustment is the filing date of the most recent CPA.

Applicant will be able to obtain more detailed information by accessing the Patent Application Information Retrieval (PAIR) WEB site (http://pair.uspto.gov).

Any questions regarding the Patent Term Extension or Adjustment determination should be directed to the Office of Patent Legal Administration at (571)-272-7702. Questions relating to issue and publication fee payments should be directed to the Application Assistance Unit (AAU) of the Office of Data Management (ODM) at (571)-272-4200.

APPLICANT(s) (Please see PAIR WEB site http://pair.uspto.gov for additional applicants):

Pouya Taaghol, San Jose, CA;
Big Data Federation, Inc., Santa Clara, CA;
Vivek Ramanna, San Jose, CA;

The United States represents the largest, most dynamic marketplace in the world and is an unparalleled location for business investment, innovation, and commercialization of new technologies. The USA offers tremendous resources and advantages for those who invest and manufacture goods here. Through SelectUSA, our nation works to encourage and facilitate business investment. To learn more about why the USA is the best country in the world to develop technology, manufacture products, and grow your business, visit SelectUSA.gov.

IR103 (Rev. 10/09)

Electronic Patent Application Fee Transmittal

Application Number:	16900963
Filing Date:	14-Jun-2020
Title of Invention:	Distributed Software Defined Networking
First Named Inventor/Applicant Name:	Pouya Taaghol
Filer:	Christopher James Horgan
Attorney Docket Number:	TAAG001CONT1

Filed as Small Entity

Filing Fees for Utility under 35 USC 111(a)

Description	Fee Code	Quantity	Amount	Sub-Total in USD($)
Basic Filing:				
Pages:				
Claims:				
Miscellaneous-Filing:				
Petition:				
Patent-Appeals-and-Interference:				
Post-Allowance-and-Post-Issuance:				
UTILITY APPL ISSUE FEE	2501	1	600	600

Description	Fee Code	Quantity	Amount	Sub-Total in USD($)
Extension-of-Time:				
Miscellaneous:				
		Total in USD ($)		**600**

Electronic Acknowledgement Receipt	
EFS ID:	41265202
Application Number:	16900963
International Application Number:	
Confirmation Number:	2579
Title of Invention:	Distributed Software Defined Networking
First Named Inventor/Applicant Name:	Pouya Taaghol
Customer Number:	112449
Filer:	Christopher James Horgan
Filer Authorized By:	
Attorney Docket Number:	TAAG001CONT1
Receipt Date:	01-DEC-2020
Filing Date:	14-JUN-2020
Time Stamp:	17:48:27
Application Type:	Utility under 35 USC 111(a)

Payment information:

Submitted with Payment	yes
Payment Type	CARD
Payment was successfully received in RAM	$600
RAM confirmation Number	E2020B1H49335396
Deposit Account	
Authorized User	
The Director of the USPTO is hereby authorized to charge indicated fees and credit any overpayment as follows:	

File Listing:

Document Number	Document Description	File Name	File Size(Bytes)/ Message Digest	Multi Part /.zip	Pages (if appl.)
1	Issue Fee Payment (PTO-85B)	TAAG001CONT_ISSUE_FEE____.pdf	102861 fe9b12fb927c26af5b75c0f7841ccb63692aad9f	no	2
Warnings:					
Information:					
2	Fee Worksheet (SB06)	fee-info.pdf	30351 5e372560387dfa725ece9038835baf7c2e401e88	no	2
Warnings:					
Information:					
		Total Files Size (in bytes):	133212		

This Acknowledgement Receipt evidences receipt on the noted date by the USPTO of the indicated documents, characterized by the applicant, and including page counts, where applicable. It serves as evidence of receipt similar to a Post Card, as described in MPEP 503.

New Applications Under 35 U.S.C. 111
If a new application is being filed and the application includes the necessary components for a filing date (see 37 CFR 1.53(b)-(d) and MPEP 506), a Filing Receipt (37 CFR 1.54) will be issued in due course and the date shown on this Acknowledgement Receipt will establish the filing date of the application.
National Stage of an International Application under 35 U.S.C. 371
If a timely submission to enter the national stage of an international application is compliant with the conditions of 35 U.S.C. 371 and other applicable requirements a Form PCT/DO/EO/903 indicating acceptance of the application as a national stage submission under 35 U.S.C. 371 will be issued in addition to the Filing Receipt, in due course.
New International Application Filed with the USPTO as a Receiving Office
If a new international application is being filed and the international application includes the necessary components for an international filing date (see PCT Article 11 and MPEP 1810), a Notification of the International Application Number and of the International Filing Date (Form PCT/RO/105) will be issued in due course, subject to prescriptions concerning national security, and the date shown on this Acknowledgement Receipt will establish the international filing date of the application.

PART B - FEE(S) TRANSMITTAL

Complete and send this form, together with applicable fee(s), by mail or fax, or via EFS-Web.

By mail, send to: Mail Stop ISSUE FEE
Commissioner for Patents
P.O. Box 1450
Alexandria, Virginia 22313-1450

By fax, send to: (571)-273-2885

INSTRUCTIONS: This form should be used for transmitting the ISSUE FEE and PUBLICATION FEE (if required). Blocks 1 through 5 should be completed where appropriate. All further correspondence including the Patent, advance orders and notification of maintenance fees will be mailed to the current correspondence address as indicated unless corrected below or directed otherwise in Block 1, by (a) specifying a new correspondence address; and/or (b) indicating a separate "FEE ADDRESS" for maintenance fee notifications.

CURRENT CORRESPONDENCE ADDRESS (Note: Use Block 1 for any change of address)

112449 7590 11/13/2020
Roark IP
1438 Dahlia Loop
San Jose, CA 95126

Note: A certificate of mailing can only be used for domestic mailings of the Fee(s) Transmittal. This certificate cannot be used for any other accompanying papers. Each additional paper, such as an assignment or formal drawing, must have its own certificate of mailing or transmission.

Certificate of Mailing or Transmission

I hereby certify that this Fee(s) Transmittal is being deposited with the United States Postal Service with sufficient postage for first class mail in an envelope addressed to the Mail Stop ISSUE FEE address above, or being transmitted to the USPTO via EFS-Web or by facsimile to (571) 273-2885, on the date below.

(Typed or printed name)

(Signature)

(Date)

APPLICATION NO.	FILING DATE	FIRST NAMED INVENTOR	ATTORNEY DOCKET NO.	CONFIRMATION NO.
16/900,963	06/14/2020	Pouya Taaghol	TAAG001CONT1	2579

TITLE OF INVENTION: Distributed Software Defined Networking

APPLN. TYPE	ENTITY STATUS	ISSUE FEE DUE	PUBLICATION FEE DUE	PREV. PAID ISSUE FEE	TOTAL FEE(S) DUE	DATE DUE
nonprovisional	SMALL	$600	$0.00	$0.00	$600	02/15/2021

EXAMINER	ART UNIT	CLASS-SUBCLASS
HIGA, BRENDAN Y	2441	709-201000

1. Change of correspondence address or indication of "Fee Address" (37 CFR 1.363).

❑ Change of correspondence address (or Change of Correspondence Address form PTO/SB/122) attached.

❑ "Fee Address" indication (or "Fee Address" Indication form PTO/SB/47; Rev 03-09 or more recent) attached. **Use of a Customer Number is required.**

2. For printing on the patent front page, list
(1) The names of up to 3 registered patent attorneys or agents OR, alternatively,
(2) The name of a single firm (having as a member a registered attorney or agent) and the names of up to 2 registered patent attorneys or agents. If no name is listed, no name will be printed.

1 ROARK IP
2
3

3. ASSIGNEE NAME AND RESIDENCE DATA TO BE PRINTED ON THE PATENT (print or type)

PLEASE NOTE: Unless an assignee is identified below, no assignee data will appear on the patent. If an assignee is identified below, the document must have been previously recorded, or filed for recordation, as set forth in 37 CFR 3.11 and 37 CFR 3.81(a). Completion of this form is NOT a substitute for filing an assignment.

(A) NAME OF ASSIGNEE: Acceptto Corporation

(B) RESIDENCE: (CITY and STATE OR COUNTRY): Portland, OR

Please check the appropriate assignee category or categories (will not be printed on the patent) : ❑ Individual ❑ Corporation or other private group entity ❑ Government

4a. Fees submitted: ☒ Issue Fee ❑ Publication Fee (if required) ❑ Advance Order - # of Copies _____

4b. Method of Payment: *(Please first reapply any previously paid fee shown above)*

☒ Electronic Payment via EFS-Web ❑ Enclosed check ❑ Non-electronic payment by credit card (Attach form PTO-2038)

❑ The Director is hereby authorized to charge the required fee(s), any deficiency, or credit any overpayment to Deposit Account No. _____

5. **Change in Entity Status** (from status indicated above)

❑ Applicant certifying micro entity status. See 37 CFR 1.29

☒ Applicant asserting small entity status. See 37 CFR 1.27

❑ Applicant changing to regular undiscounted fee status.

NOTE: Absent a valid certification of Micro Entity Status (see forms PTO/SB/15A and 15B), issue fee payment in the micro entity amount will not be accepted at the risk of application abandonment.
NOTE: If the application was previously under micro entity status, checking this box will be taken to be a notification of loss of entitlement to micro entity status.
NOTE: Checking this box will be taken to be a notification of loss of entitlement to small or micro entity status, as applicable.

NOTE: This form must be signed in accordance with 37 CFR 1.31 and 1.33. See 37 CFR 1.4 for signature requirements and certifications.

Authorized Signature /Christopher J. Horgan/ Date 12/1/2020

Typed or printed name Christopher J. Horgan Registration No. 40,394

PTOL-85 Part B (08-18) Approved for use through 01/31/2020 OMB 0651-0033 U.S. Patent and Trademark Office; U.S. DEPARTMENT OF COMMERCE

Exhibit 1002
Microsoft Corporation v. Edge Networking Systems, LLC
025

IN THE UNITED STATES PATENT AND TRADEMARK OFFICE

In re Application of: Taaghol | Examiner: Higa

Serial No.: 16/900,963 | Art Unit:2441

Filed: 6 / 1 4 / 2 0 2 0

Attorney Docket No.: TAAG001CONT2

For: DISTRIBUTED SOFTWARE DEFINED NETWORKING

Mail Stop ISSUE FEE
Commissioner for Patents
PO Box 1450
Alexandria, VA 22313-1450

Dear Sir:

APPLICANT'S COMMENTS ON EXAMINER'S STATEMENT OF REASONS FOR ALLOWANCE

The Applicant acknowledges the Examiner's Statement of Reasons for Allowance of the above-referenced patent application and agrees that the claimed subject matter is patentable. However, the Applicant takes no position regarding the Reasons for Allowance presented by the Examiner other than the positions the applicant may have previously taken during prosecution. Therefore, the Examiner's Reasons for Allowance should not be attributed to the Applicant as an indication of the basis for Applicant's belief that the claims are patentable. Furthermore, the Applicant respectfully asserts that there may also be additional reasons for patentability of the claimed subject matter not explicitly stated in this record and the Applicant does not waive its rights to such arguments by not further addressing such reasons herein.

Respecfully submitted,

ROARK IP

By: /Christopher J. Horgan/

Christopher J. Horgan
Reg. No. 40,394
1438 Dahlia Loop
San Jose, CA 95126
408-687-8306
Date: December 1, 2020

UNITED STATES PATENT AND TRADEMARK OFFICE

UNITED STATES DEPARTMENT OF COMMERCE
United States Patent and Trademark Office
Address: COMMISSIONER FOR PATENTS
P.O. Box 1450
Alexandria, Virginia 22313-1450
www.uspto.gov

NOTICE OF ALLOWANCE AND FEE(S) DUE

112449 7590 11/13/2020
Roark IP
1438 Dahlia Loop
San Jose, CA 95126

EXAMINER
HIGA, BRENDAN Y

ART UNIT	PAPER NUMBER
2441	

DATE MAILED: 11/13/2020

APPLICATION NO.	FILING DATE	FIRST NAMED INVENTOR	ATTORNEY DOCKET NO.	CONFIRMATION NO.
16/900,963	06/14/2020	Pouya Taaghol	TAAG001CONT1	2579

TITLE OF INVENTION: Distributed Software Defined Networking

APPLN. TYPE	ENTITY STATUS	ISSUE FEE DUE	PUBLICATION FEE DUE	PREV. PAID ISSUE FEE	TOTAL FEE(S) DUE	DATE DUE
nonprovisional	SMALL	$600	$0.00	$0.00	$600	02/15/2021

THE APPLICATION IDENTIFIED ABOVE HAS BEEN EXAMINED AND IS ALLOWED FOR ISSUANCE AS A PATENT. PROSECUTION ON THE MERITS IS CLOSED. THIS NOTICE OF ALLOWANCE IS NOT A GRANT OF PATENT RIGHTS. THIS APPLICATION IS SUBJECT TO WITHDRAWAL FROM ISSUE AT THE INITIATIVE OF THE OFFICE OR UPON PETITION BY THE APPLICANT. SEE 37 CFR 1.313 AND MPEP 1308.

THE ISSUE FEE AND PUBLICATION FEE (IF REQUIRED) MUST BE PAID WITHIN THREE MONTHS FROM THE MAILING DATE OF THIS NOTICE OR THIS APPLICATION SHALL BE REGARDED AS ABANDONED. THIS STATUTORY PERIOD CANNOT BE EXTENDED. SEE 35 U.S.C. 151. THE ISSUE FEE DUE INDICATED ABOVE DOES NOT REFLECT A CREDIT FOR ANY PREVIOUSLY PAID ISSUE FEE IN THIS APPLICATION. IF AN ISSUE FEE HAS PREVIOUSLY BEEN PAID IN THIS APPLICATION (AS SHOWN ABOVE), THE RETURN OF PART B OF THIS FORM WILL BE CONSIDERED A REQUEST TO REAPPLY THE PREVIOUSLY PAID ISSUE FEE TOWARD THE ISSUE FEE NOW DUE.

HOW TO REPLY TO THIS NOTICE:

I. Review the ENTITY STATUS shown above. If the ENTITY STATUS is shown as SMALL or MICRO, verify whether entitlement to that entity status still applies.

If the ENTITY STATUS is the same as shown above, pay the TOTAL FEE(S) DUE shown above.

If the ENTITY STATUS is changed from that shown above, on PART B - FEE(S) TRANSMITTAL, complete section number 5 titled "Change in Entity Status (from status indicated above)".

For purposes of this notice, small entity fees are 1/2 the amount of undiscounted fees, and micro entity fees are 1/2 the amount of small entity fees.

II. PART B - FEE(S) TRANSMITTAL, or its equivalent, must be completed and returned to the United States Patent and Trademark Office (USPTO) with your ISSUE FEE and PUBLICATION FEE (if required). If you are charging the fee(s) to your deposit account, section "4b" of Part B - Fee(s) Transmittal should be completed and an extra copy of the form should be submitted. If an equivalent of Part B is filed, a request to reapply a previously paid issue fee must be clearly made, and delays in processing may occur due to the difficulty in recognizing the paper as an equivalent of Part B.

III. All communications regarding this application must give the application number. Please direct all communications prior to issuance to Mail Stop ISSUE FEE unless advised to the contrary.

IMPORTANT REMINDER: Maintenance fees are due in utility patents issuing on applications filed on or after Dec. 12, 1980. It is patentee's responsibility to ensure timely payment of maintenance fees when due. More information is available at www.uspto.gov/PatentMaintenanceFees.

PTOL-85 (Rev. 02/11)

PART B - FEE(S) TRANSMITTAL

Complete and send this form, together with applicable fee(s), by mail or fax, or via EFS-Web.

By mail, send to: Mail Stop ISSUE FEE
Commissioner for Patents
P.O. Box 1450
Alexandria, Virginia 22313-1450

By fax, send to: (571)-273-2885

INSTRUCTIONS: This form should be used for transmitting the ISSUE FEE and PUBLICATION FEE (if required). Blocks 1 through 5 should be completed where appropriate. All further correspondence including the Patent, advance orders and notification of maintenance fees will be mailed to the current correspondence address as indicated unless corrected below or directed otherwise in Block 1, by (a) specifying a new correspondence address; and/or (b) indicating a separate "FEE ADDRESS" for maintenance fee notifications.

CURRENT CORRESPONDENCE ADDRESS (Note: Use Block 1 for any change of address)

112449 7590 11/13/2020
Roark IP
1438 Dahlia Loop
San Jose, CA 95126

Note: A certificate of mailing can only be used for domestic mailings of the Fee(s) Transmittal. This certificate cannot be used for any other accompanying papers. Each additional paper, such as an assignment or formal drawing, must have its own certificate of mailing or transmission.

Certificate of Mailing or Transmission

I hereby certify that this Fee(s) Transmittal is being deposited with the United States Postal Service with sufficient postage for first class mail in an envelope addressed to the Mail Stop ISSUE FEE address above, or being transmitted to the USPTO via EFS-Web or by facsimile to (571) 273-2885, on the date below.

(Typed or printed name)

(Signature)

(Date)

APPLICATION NO.	FILING DATE	FIRST NAMED INVENTOR	ATTORNEY DOCKET NO.	CONFIRMATION NO.
16/900,963	06/14/2020	Pouya Taaghol	TAAG001CONT1	2579

TITLE OF INVENTION: Distributed Software Defined Networking

APPLN. TYPE	ENTITY STATUS	ISSUE FEE DUE	PUBLICATION FEE DUE	PREV. PAID ISSUE FEE	TOTAL FEE(S) DUE	DATE DUE
nonprovisional	SMALL	$600	$0.00	$0.00	$600	02/15/2021

EXAMINER	ART UNIT	CLASS-SUBCLASS
HIGA, BRENDAN Y	2441	709-201000

1. Change of correspondence address or indication of "Fee Address" (37 CFR 1.363).

❑ Change of correspondence address (or Change of Correspondence Address form PTO/SB/122) attached.

❑ "Fee Address" indication (or "Fee Address" Indication form PTO/SB/47; Rev 03-09 or more recent) attached. **Use of a Customer Number is required.**

2. For printing on the patent front page, list
(1) The names of up to 3 registered patent attorneys or agents OR, alternatively,
(2) The name of a single firm (having as a member a registered attorney or agent) and the names of up to 2 registered patent attorneys or agents. If no name is listed, no name will be printed.

1_____
2_____
3_____

3. ASSIGNEE NAME AND RESIDENCE DATA TO BE PRINTED ON THE PATENT (print or type)

PLEASE NOTE: Unless an assignee is identified below, no assignee data will appear on the patent. If an assignee is identified below, the document must have been previously recorded, or filed for recordation, as set forth in 37 CFR 3.11 and 37 CFR 3.81(a). Completion of this form is NOT a substitute for filing an assignment.

(A) NAME OF ASSIGNEE (B) RESIDENCE: (CITY and STATE OR COUNTRY)

Please check the appropriate assignee category or categories (will not be printed on the patent) : ❑ Individual ❑ Corporation or other private group entity ❑ Government

4a. Fees submitted: ❑Issue Fee ❑Publication Fee (if required) ❑Advance Order - # of Copies _____

4b. Method of Payment: *(Please first reapply any previously paid fee shown above)*

❑ Electronic Payment via EFS-Web ❑ Enclosed check ❑ Non-electronic payment by credit card (Attach form PTO-2038)

❑ The Director is hereby authorized to charge the required fee(s), any deficiency, or credit any overpayment to Deposit Account No. _____

5. **Change in Entity Status** (from status indicated above)

❑ Applicant certifying micro entity status. See 37 CFR 1.29

❑ Applicant asserting small entity status. See 37 CFR 1.27

❑ Applicant changing to regular undiscounted fee status.

NOTE: Absent a valid certification of Micro Entity Status (see forms PTO/SB/15A and 15B), issue fee payment in the micro entity amount will not be accepted at the risk of application abandonment.
NOTE: If the application was previously under micro entity status, checking this box will be taken to be a notification of loss of entitlement to micro entity status.
NOTE: Checking this box will be taken to be a notification of loss of entitlement to small or micro entity status, as applicable.

NOTE: This form must be signed in accordance with 37 CFR 1.31 and 1.33. See 37 CFR 1.4 for signature requirements and certifications.

Authorized Signature _____ Date _____

Typed or printed name _____ Registration No. _____

Exhibit 1002
Microsoft Corporation v. Edge Networking Systems, LLC
028

UNITED STATES PATENT AND TRADEMARK OFFICE

UNITED STATES DEPARTMENT OF COMMERCE
United States Patent and Trademark Office
Address: COMMISSIONER FOR PATENTS
P.O. Box 1450
Alexandria, Virginia 22313-1450
www.uspto.gov

APPLICATION NO.	FILING DATE	FIRST NAMED INVENTOR	ATTORNEY DOCKET NO.	CONFIRMATION NO.
16/900,963	06/14/2020	Pouya Taaghol	TAAG001CONT1	2579

112449 7590 11/13/2020
Roark IP
1438 Dahlia Loop
San Jose, CA 95126

EXAMINER
HIGA, BRENDAN Y

ART UNIT	PAPER NUMBER
2441	

DATE MAILED: 11/13/2020

Determination of Patent Term Adjustment under 35 U.S.C. 154 (b)
(Applications filed on or after May 29, 2000)

The Office has discontinued providing a Patent Term Adjustment (PTA) calculation with the Notice of Allowance.

Section 1(h)(2) of the AIA Technical Corrections Act amended 35 U.S.C. 154(b)(3)(B)(i) to eliminate the requirement that the Office provide a patent term adjustment determination with the notice of allowance. See Revisions to Patent Term Adjustment, 78 Fed. Reg. 19416, 19417 (Apr. 1, 2013). Therefore, the Office is no longer providing an initial patent term adjustment determination with the notice of allowance. The Office will continue to provide a patent term adjustment determination with the Issue Notification Letter that is mailed to applicant approximately three weeks prior to the issue date of the patent, and will include the patent term adjustment on the patent. Any request for reconsideration of the patent term adjustment determination (or reinstatement of patent term adjustment) should follow the process outlined in 37 CFR 1.705.

Any questions regarding the Patent Term Extension or Adjustment determination should be directed to the Office of Patent Legal Administration at (571)-272-7702. Questions relating to issue and publication fee payments should be directed to the Customer Service Center of the Office of Patent Publication at 1-(888)-786-0101 or (571)-272-4200.

PTOL-85 (Rev. 02/11)

Exhibit 1002
Microsoft Corporation v. Edge Networking Systems, LLC
029

OMB Clearance and PRA Burden Statement for PTOL-85 Part B

The Paperwork Reduction Act (PRA) of 1995 requires Federal agencies to obtain Office of Management and Budget approval before requesting most types of information from the public. When OMB approves an agency request to collect information from the public, OMB (i) provides a valid OMB Control Number and expiration date for the agency to display on the instrument that will be used to collect the information and (ii) requires the agency to inform the public about the OMB Control Number's legal significance in accordance with 5 CFR 1320.5(b).

The information collected by PTOL-85 Part B is required by 37 CFR 1.311. The information is required to obtain or retain a benefit by the public which is to file (and by the USPTO to process) an application. Confidentiality is governed by 35 U.S.C. 122 and 37 CFR 1.14. This collection is estimated to take 30 minutes to complete, including gathering, preparing, and submitting the completed application form to the USPTO. Time will vary depending upon the individual case. Any comments on the amount of time you require to complete this form and/or suggestions for reducing this burden, should be sent to the Chief Information Officer, U.S. Patent and Trademark Office, U.S. Department of Commerce, P.O. Box 1450, Alexandria, Virginia 22313-1450. DO NOT SEND FEES OR COMPLETED FORMS TO THIS ADDRESS. SEND TO: Commissioner for Patents, P.O. Box 1450, Alexandria, Virginia 22313-1450. Under the Paperwork Reduction Act of 1995, no persons are required to respond to a collection of information unless it displays a valid OMB control number.

Privacy Act Statement

The Privacy Act of 1974 (P.L. 93-579) requires that you be given certain information in connection with your submission of the attached form related to a patent application or patent. Accordingly, pursuant to the requirements of the Act, please be advised that: (1) the general authority for the collection of this information is 35 U.S.C. 2(b)(2); (2) furnishing of the information solicited is voluntary; and (3) the principal purpose for which the information is used by the U.S. Patent and Trademark Office is to process and/or examine your submission related to a patent application or patent. If you do not furnish the requested information, the U.S. Patent and Trademark Office may not be able to process and/or examine your submission, which may result in termination of proceedings or abandonment of the application or expiration of the patent.

The information provided by you in this form will be subject to the following routine uses:

1. The information on this form will be treated confidentially to the extent allowed under the Freedom of Information Act (5 U.S.C. 552) and the Privacy Act (5 U.S.C 552a). Records from this system of records may be disclosed to the Department of Justice to determine whether disclosure of these records is required by the Freedom of Information Act.
2. A record from this system of records may be disclosed, as a routine use, in the course of presenting evidence to a court, magistrate, or administrative tribunal, including disclosures to opposing counsel in the course of settlement negotiations.
3. A record in this system of records may be disclosed, as a routine use, to a Member of Congress submitting a request involving an individual, to whom the record pertains, when the individual has requested assistance from the Member with respect to the subject matter of the record.
4. A record in this system of records may be disclosed, as a routine use, to a contractor of the Agency having need for the information in order to perform a contract. Recipients of information shall be required to comply with the requirements of the Privacy Act of 1974, as amended, pursuant to 5 U.S.C. 552a(m).
5. A record related to an International Application filed under the Patent Cooperation Treaty in this system of records may be disclosed, as a routine use, to the International Bureau of the World Intellectual Property Organization, pursuant to the Patent Cooperation Treaty.
6. A record in this system of records may be disclosed, as a routine use, to another federal agency for purposes of National Security review (35 U.S.C. 181) and for review pursuant to the Atomic Energy Act (42 U.S.C. 218(c)).
7. A record from this system of records may be disclosed, as a routine use, to the Administrator, General Services, or his/her designee, during an inspection of records conducted by GSA as part of that agency's responsibility to recommend improvements in records management practices and programs, under authority of 44 U.S.C. 2904 and 2906. Such disclosure shall be made in accordance with the GSA regulations governing inspection of records for this purpose, and any other relevant (i.e., GSA or Commerce) directive. Such disclosure shall not be used to make determinations about individuals.
8. A record from this system of records may be disclosed, as a routine use, to the public after either publication of the application pursuant to 35 U.S.C. 122(b) or issuance of a patent pursuant to 35 U.S.C. 151. Further, a record may be disclosed, subject to the limitations of 37 CFR 1.14, as a routine use, to the public if the record was filed in an application which became abandoned or in which the proceedings were terminated and which application is referenced by either a published application, an application open to public inspection or an issued patent.
9. A record from this system of records may be disclosed, as a routine use, to a Federal, State, or local law enforcement agency, if the USPTO becomes aware of a violation or potential violation of law or regulation.

Notice of Allowability	Application No. 16/900,963	Applicant(s) Taaghol et al.	
	Examiner BRENDAN HIGA	Art Unit 2441	AIA (FITF) Status Yes

-- The MAILING DATE of this communication appears on the cover sheet with the correspondence address--

All claims being allowable, PROSECUTION ON THE MERITS IS (OR REMAINS) CLOSED in this application. If not included herewith (or previously mailed), a Notice of Allowance (PTOL-85) or other appropriate communication will be mailed in due course. **THIS NOTICE OF ALLOWABILITY IS NOT A GRANT OF PATENT RIGHTS.** This application is subject to withdrawal from issue at the initiative of the Office or upon petition by the applicant. See 37 CFR 1.313 and MPEP 1308.

1. ☑ This communication is responsive to the application filed on 06/14/2020.
   ☐ A declaration(s)/affidavit(s) under **37 CFR 1.130(b)** was/were filed on _____.

2. ☐ An election was made by the applicant in response to a restriction requirement set forth during the interview on _____; the restriction requirement and election have been incorporated into this action.

3. ☑ The allowed claim(s) is/are 1-18 . As a result of the allowed claim(s), you may be eligible to benefit from the **Patent Prosecution Highway** program at a participating intellectual property office for the corresponding application. For more information, please see **http://www.uspto.gov/patents/init_events/pph/index.jsp** or send an inquiry to **PPHfeedback@uspto.gov.**

4. ☐ Acknowledgment is made of a claim for foreign priority under 35 U.S.C. § 119(a)-(d) or (f).

   Certified copies:

   a) ☐ All b) ☐ Some *c) ☐ None of the:

   1. ☐ Certified copies of the priority documents have been received.
   2. ☐ Certified copies of the priority documents have been received in Application No. _____ .
   3. ☐ Copies of the certified copies of the priority documents have been received in this national stage application from the International Bureau (PCT Rule 17.2(a)).

   * Certified copies not received: _____ .

Applicant has THREE MONTHS FROM THE "MAILING DATE" of this communication to file a reply complying with the requirements noted below. Failure to timely comply will result in ABANDONMENT of this application.
THIS THREE-MONTH PERIOD IS NOT EXTENDABLE.

5. ☐ CORRECTED DRAWINGS (as "replacement sheets") must be submitted.
   ☐ including changes required by the attached Examiner's Amendment / Comment or in the Office action of Paper No./Mail Date _____ .

   Identifying indicia such as the application number (see 37 CFR 1.84(c)) should be written on the drawings in the front (not the back) of each sheet. Replacement sheet(s) should be labeled as such in the header according to 37 CFR 1.121(d).

6. ☐ DEPOSIT OF and/or INFORMATION about the deposit of BIOLOGICAL MATERIAL must be submitted. Note the attached Examiner's comment regarding REQUIREMENT FOR THE DEPOSIT OF BIOLOGICAL MATERIAL.

Attachment(s)

1. ☑ Notice of References Cited (PTO-892)
2. ☑ Information Disclosure Statements (PTO/SB/08), Paper No./Mail Date 08/17/2020.
3. ☐ Examiner's Comment Regarding Requirement for Deposit of Biological Material _____.
4. ☑ Interview Summary (PTO-413), Paper No./Mail Date. 10/29/2020.
5. ☐ Examiner's Amendment/Comment
6. ☑ Examiner's Statement of Reasons for Allowance
7. ☐ Other _____.

/BRENDAN Y HIGA/
Primary Examiner, Art Unit 2441

Exhibit 1002
Microsoft Corporation v. Edge Networking Systems, LLC
031

DETAILED ACTION

This Office action is in response to the application filed on June 14, 2020.

Claims 1-18 are pending.

Terminal Disclaimer

The terminal disclaimers filed on November 04, 2020 disclaiming the terminal portion of any patent granted on this application which would extend beyond the expiration date of US Patent No. 9,843,624 and 10,686,871 have been reviewed and is accepted. The terminal disclaimers have been recorded.

Allowable Subject Matter

Claims 1-18 are allowed.

Closest Prior Art:

Spivak et al. (US 2012/0266156) teaches a deployment system with the ability to perform lifecycle management operation of a multi-node distributed application (*see abstract and ¶0066*). In particular, Spivak teaches rolling (e.g., staggering) updates to reduce the impact of upgrades and/or changes on the multi-node distributed application (*see ¶0066*).

However, the prior art does not teach or render obvious, before the earliest effective filing date of the claimed invention, in the specific combinations and manner recited within the claims, the features of:

"… a programmable network device hosting a plurality of first network applications;

a programmable cloud device hosting a plurality of second network applications;

wherein at least one of the plurality of first network applications in the programmable network device and at least one of the plurality of second network applications in the programmable cloud device are in secure communication with each other to form a distributed application;

the programmable network device and programmable cloud device are each powered by a sandboxing operating system which facilitates deployment of the plurality of first and second network applications and facilitates upgrades of the first and second network applications with substantially no interruption to operation of the programmable network device and programmable cloud device;

wherein the programmable network device verifies authenticity of the upgrades to the plurality of first network applications and the programmable cloud device verifies authenticity of the upgrades to the plurality of second network applications and wherein the verification is based on unique security keys associated with each of the plurality of first and second network applications;

an application repository storing distributed applications which have been tested for installation in the programmable network device and programmable cloud device; and

an application management portal coupled to the programmable network device, programmable cloud device and the application repository, wherein the application

management portal manages usage of the distributed applications on the programmable network device and programmable cloud device."

Conclusion

Any inquiry concerning this communication or earlier communications from the examiner should be directed to BRENDAN HIGA whose telephone number is (571)272-5823. The examiner can normally be reached on Monday - Friday 8:30 AM - 5:00 PM.

If attempts to reach the examiner by telephone are unsuccessful, the examiner's supervisor, Wing Chan can be reached on (571)272-7493. The fax phone number for the organization where this application or proceeding is assigned is 571-273-8300.

Information regarding the status of an application may be obtained from the Patent Application Information Retrieval (PAIR) system. Status information for published applications may be obtained from either Private PAIR or Public PAIR. Status information for unpublished applications is available through Private PAIR only. For more information about the PAIR system, see http://pair-direct.uspto.gov. Should you have questions on access to the Private PAIR system, contact the Electronic Business Center (EBC) at 866-217-9197 (toll-free). If you would like assistance from a USPTO Customer Service Representative or access to the automated information system, call 800-786-9199 (IN USA OR CANADA) or 571-272-1000.

/BRENDAN Y HIGA/
Primary Examiner, Art Unit 2441

Examiner-Initiated Interview Summary	Application No. 16/900,963	Applicant(s) Taaghol et al.	
	Examiner BRENDAN HIGA	Art Unit 2441	AIA (FITF) Status Yes

All participants (applicant, applicant's representative, PTO personnel):

(1) Brendan Higa. (3) _____.

(2) Christopher J. Horgan (Reg. No. 40,394). (4) _____.

Date of Interview: 29 October 2020.

Type: ☑ Telephonic ☐ Video Conference
☐ Personal [copy given to: ☐ applicant ☐ applicant's representative]

Exhibit shown or demonstration conducted: ☐ Yes ☑ No.
If Yes, brief description: _____.

Issues Discussed ☐ 101 ☐ 112 ☐ 102 ☐ 103 ☑ Others
(For each of the checked box(es) above, please describe below the issue and detailed description of the discussion)

Claim(s) discussed: 1-18.

Identification of prior art discussed: n/a.

Substance of Interview
(For each issue discussed, provide a detailed description and indicate if agreement was reached. Some topics may include: identification or clarification of a reference or a portion thereof, claim interpretation, proposed amendments, arguments of any applied references etc...)

Discussed the double patenting rejection of the claims in view of US Patent No. 10,686,871 and 9,843,624. Applicant's representative, Christopher Horgan, agreed to the filing of the terminal disclaimers to obviate the double patenting rejections..

Applicant recordation instructions: It is not necessary for applicant to provide a separate record of the substance of interview.

Examiner recordation instructions: Examiners must summarize the substance of any interview of record. A complete and proper recordation of the substance of an interview should include the items listed in MPEP 713.04 for complete and proper recordation including the identification of the general thrust of each argument or issue discussed, a general indication of any other pertinent matters discussed regarding patentability and the general results or outcome of the interview, to include an indication as to whether or not agreement was reached on the issues raised.

☐ Attachment

/BRENDAN Y HIGA/ Primary Examiner, Art Unit 2441	

Notice of References Cited	Application/Control No. 16/900,963	Applicant(s)/Patent Under Reexamination Taaghol et al.	
	Examiner BRENDAN HIGA	Art Unit 2441	Page 1 of 1

U.S. PATENT DOCUMENTS

*		Document Number Country Code-Number-Kind Code	Date MM-YYYY	Name	CPC Classification	US Classification
*	A	US-8495611-B2	07-2013	McCarthy; Christopher	G06F9/5072	717/169
*	B	US-20120266156-A1	10-2012	SPIVAK; Vadim	H04L67/34	717/172
*	C	US-20060271341-A1	11-2006	Brown; Mathilde C.	G06F8/20	703/1
	D					
	E					
	F					
	G					
	H					
	I					
	J					
	K					
	L					
	M					

FOREIGN PATENT DOCUMENTS

*		Document Number Country Code-Number-Kind Code	Date MM-YYYY	Country	Name	CPC Classification
	N					
	O					
	P					
	Q					
	R					
	S					
	T					

NON-PATENT DOCUMENTS

*		Include as applicable: Author, Title Date, Publisher, Edition or Volume, Pertinent Pages)
	U	
	V	
	W	
	X	

*A copy of this reference is not being furnished with this Office action. (See MPEP § 707.05(a).)
Dates in MM-YYYY format are publication dates. Classifications may be US or foreign.

Search Notes	Application/Control No.	Applicant(s)/Patent Under Reexamination
	16/900,963	Taaghol et al.
	Examiner	**Art Unit**
	BRENDAN HIGA	2441

CPC - Searched*		
Symbol	**Date**	**Examiner**
G06F 8/60-61, 65, 70-71, 76; 9/4406, 45533-45558; 21/44-53; 2009/45562-45595	11/06/2020	BH
H04L 9/08-0819; 29/08135, 0845-08459; 41/08-082, 0866-0893; 45/563, 64; 63/0218; 67/10,1074-1087	11/06/2020	BH

CPC Combination Sets - Searched*		
Symbol	**Date**	**Examiner**

US Classification - Searched*			
Class	**Subclass**	**Date**	**Examiner**

* See search history printout included with this form or the SEARCH NOTES box below to determine the scope of the search.

Search Notes		
Search Notes	**Date**	**Examiner**
see EAST search history	11/06/2020	BH
IP.com (NPL+Patents) (see search history)	11/06/2020	BH

Interference Search			
US Class/CPC Symbol	**US Subclass/CPC Group**	**Date**	**Examiner**
G06F	8/60-61, 65, 70-71, 76; 9/4406, 45533-45558; 21/44-53; 2009/45562-45595	11/06/2020	BH
H04L	9/08-0819; 29/08135, 0845-08459; 41/08-082, 0866-0893; 45/563, 64; 63/0218; 67/10,1074-1087	11/06/2020	BH

Exhibit 1002
Microsoft Corporation v. Edge Networking Systems, LLC
037

Search Notes	Application/Control No.	Applicant(s)/Patent Under Reexamination
	16/900,963	Taaghol et al.
	Examiner	**Art Unit**
	BRENDAN HIGA	2441

Exhibit 1002
Microsoft Corporation v. Edge Networking Systems, LLC
038

Index of Claims	Application/Control No.	Applicant(s)/Patent Under Reexamination
	16/900,963	Taaghol et al.
	Examiner	**Art Unit**
	BRENDAN HIGA	2441

✓	Rejected	-	Cancelled	N	Non-Elected	A	Appeal
=	Allowed	÷	Restricted	I	Interference	O	Objected

CLAIMS

☑ Claims renumbered in the same order as presented by applicant ☐ CPA ☑ T.D. ☐ R.1.47

CLAIM		DATE								
Final	Original	11/06/2020								
	1	=								
	2	=								
	3	=								
	4	=								
	5	=								
	6	=								
	7	=								
	8	=								
	9	=								
	10	=								
	11	=								
	12	=								
	13	=								
	14	=								
	15	=								
	16	=								
	17	=								
	18	=								

Issue Classification	Application/Control No.	Applicant(s)/Patent Under Reexamination
	16/900,963	Taaghol et al.
	Examiner	**Art Unit**
	BRENDAN HIGA	2441

CPC

Symbol					Type	Version
H04L	/	67	/	10	F	2013-01-01
G06F	/	9	/	4406	I	2013-01-01
H04L	/	41	/	042	I	2013-01-01
G06F	/	21	/	44	I	2013-01-01
H04L	/	67	/	34	I	2013-01-01
H04L	/	41	/	0803	I	2013-01-01
H04L	/	63	/	0227	I	2013-01-01
G06F	/	21	/	53	I	2013-01-01
H04L	/	9	/	0822	I	2013-01-01
H04L	/	29	/	08135	I	2013-01-01
H04L	/	29	/	08459	I	2013-01-01
H04L	/	41	/	0893	I	2013-01-01
H04L	/	45	/	563	I	2013-01-01
H04L	/	45	/	64	I	2013-01-01
H04L	/	67	/	1076	I	2013-01-01
G06F	/	21	/	57	I	2013-01-01
G06F	/	2009	/	45575	A	2013-01-01
H04W	/	4	/	00	A	2013-01-01
H04L	/	63	/	0218	A	2013-01-01
G06F	/	8	/	60	A	2013-01-01
H04L	/	41	/	509	A	2013-01-01
H04L	/	41	/	082	A	2013-01-01
H04L	/	41	/	0833	A	2013-01-01
H04L	/	41	/	5019	A	2013-01-01
G06F	/	8	/	70	A	2013-01-01
G06F	/	2009	/	45587	A	2013-01-01

CPC Combination Sets

Symbol					Type	Set	Ranking	Version
	/		/					

NONE (Assistant Examiner)	(Date)	**Total Claims Allowed:** 18	
/BRENDAN Y HIGA/ Primary Examiner, Art Unit 2441 (Primary Examiner)	06 November 2020 (Date)	O.G. Print Claim(s) 1	O.G. Print Figure 3

U.S. Patent and Trademark Office

Part of Paper No.: 20201028

Exhibit 1002
Microsoft Corporation v. Edge Networking Systems, LLC
040

Issue Classification	Application/Control No.	Applicant(s)/Patent Under Reexamination
	16/900,963	Taaghol et al.
	Examiner	**Art Unit**
	BRENDAN HIGA	2441

INTERNATIONAL CLASSIFICATION				
CLAIMED				
H04L29/08	/	29	/	08
G06F9/4401	/	9	/	4401
H04L12/24	/	12	/	24
G06F21/44	/	21	/	44
H04L29/06	/	29	/	06
G06F21/53	/	21	/	53
H04L9/08	/	9	/	08
H04L12/771	/	12	/	771
H04L12/715	/	12	/	715
G06F21/57	/	21	/	57
G06F9/455	/	9	/	455
H04W4/00	/	4	/	00
G06F8/60	/	8	/	60
G06F8/70	/	8	/	70

NON-CLAIMED				
H04L	/	29	/	08
G06F	/	9	/	4401
H04L	/	12	/	24
G06F	/	21	/	44
H04L	/	29	/	06
G06F	/	21	/	53
H04L	/	9	/	08
H04L	/	12	/	771
H04L	/	12	/	715
G06F	/	21	/	57
G06F	/	9	/	455
H04W	/	4	/	00
G06F	/	8	/	60
G06F	/	8	/	60

NONE (Assistant Examiner)	(Date)	**Total Claims Allowed:** 18	
/BRENDAN Y HIGA/ Primary Examiner, Art Unit 2441 (Primary Examiner)	06 November 2020 (Date)	O.G. Print Claim(s) 1	O.G. Print Figure 3

U.S. Patent and Trademark Office

Part of Paper No.: 20201028

Exhibit 1002
Microsoft Corporation v. Edge Networking Systems, LLC
041

Issue Classification	Application/Control No.	Applicant(s)/Patent Under Reexamination
	16/900,963	Taaghol et al.
	Examiner	**Art Unit**
	BRENDAN HIGA	2441

US ORIGINAL CLASSIFICATION	
CLASS	**SUBCLASS**

CROSS REFERENCES(S)						
CLASS	**SUBCLASS (ONE SUBCLASS PER BLOCK)**					

NONE (Assistant Examiner) (Date)	**Total Claims Allowed:** 18	
/BRENDAN Y HIGA/ Primary Examiner, Art Unit 2441 (Primary Examiner) 06 November 2020 (Date)	O.G. Print Claim(s) 1	O.G. Print Figure 3

U.S. Patent and Trademark Office Part of Paper No.: 20201028

Exhibit 1002
Microsoft Corporation v. Edge Networking Systems, LLC
042

Issue Classification	Application/Control No.	Applicant(s)/Patent Under Reexamination
	16/900,963	Taaghol et al.
	Examiner	**Art Unit**
	BRENDAN HIGA	2441

☑ Claims renumbered in the same order as presented by applicant ☐ CPA ☑ T.D. ☐ R.1.47

CLAIMS

Final	Original	Final	Original	Final	Original	Final	Original	Final	Original	Final	Original	Final	Original	Final	Original

NONE (Assistant Examiner) (Date)		**Total Claims Allowed:** 18	
/BRENDAN Y HIGA/ Primary Examiner, Art Unit 2441 (Primary Examiner) (Date)	06 November 2020	O.G. Print Claim(s) 1	O.G. Print Figure 3

U.S. Patent and Trademark Office Part of Paper No.: 20201028

Exhibit 1002
Microsoft Corporation v. Edge Networking Systems, LLC
043

IN THE UNITED STATES PATENT AND TRADEMARK OFFICE

In re Application of: Taaghol
Serial No.: 16/900,963
Filed: June 14, 2020
Attorney Docket No.: TAAG001CONT2

Examiner:
Art Unit:

For: Distributed Software Defined Networking

Commissioner for Patents
PO Box 1450
Alexandria, VA 22313-1450

Dear Sir:

INFORMATION DISCLOSURE STATEMENT

Applicant is submitting the accompanying Information Disclosure Statement under 37 CFR 1.97(b) and no fee is due.

Respectfully submitted,
ROARK IP
By: /Christopher J. Horgan/

Christopher J. Horgan
Registration No. 40,394
1438 Dahlia Loop
San Jose, CA 95126
Telephone: (408) 687-8306

Date: August 17, 2020

ALL REFERENCES CONSIDERED EXCEPT WHERE LINED THROUGH. /B.Y.H/

Exhibit 1002
Microsoft Corporation v. Edge Networking Systems, LLC
044

PTO/SB/08a (07-09)
Approved for use through 11/30/2020. OMB 0651-0031
U.S. Patent and Trademark Office; U.S. DEPARTMENT OF COMMERCE
Under the Paperwork Reduction Act of 1995, no persons are required to respond to a collection of information unless it contains a valid OMB control number.

Substitute for form 1449/PTO

INFORMATION DISCLOSURE STATEMENT BY APPLICANT

(Use as many sheets as necessary)

Sheet 1 of 2

Complete if Known	
Application Number	16/900,963
Filing Date	6/14/20
First Named Inventor	Taaghol
Art Unit	2441
Examiner Name	
Attorney Docket Number	TAAG001CONT2

U. S. PATENT DOCUMENTS

Examiner Initials*	Cite No.[1]	Document Number Number-Kind Code[2] (if known)	Publication Date MM-DD-YYYY	Name of Patentee or Applicant of Cited Document	Pages, Columns, Lines, Where Relevant Passages or Relevant Figures Appear
		US- 7114021	9-2006	Seshadri	
		US- 7630706	12-2009	Weigand	
		US- 8132166	3-2012	DeHaan	
		US- 8528108	9-2013	Ammer	
		US- 8650299	2-2014	Huang	
		US- 8756595	6-2014	Arcilla	
		US- 8843933	9-2014	Holler	
		US- 9226333	12-2015	Steiner	
		US- 20020016954	2-2002	Charisius	
		US- 20040107417	6-2004	Chia	
		US- 20040237081	11-2004	Homiller	
		US- 20050246703	11-2005	Ahonen	
		US- 20070078988	4-2007	Miloushev	
		US- 20080209491	8-2008	Hasek	
		US- 20090007091	1-2009	Appiah	
		US- 20090113327	4-2009	Pogrebinsky	
		US- 20090276771	11-2009	Nickolov	
		US- 20090300057	12-2009	Friedman	
		US- 20110075611	3-2011	Choi	

FOREIGN PATENT DOCUMENTS

Examiner Initials*	Cite No.[1]	Foreign Patent Document Country Code[3]-Number[4]-Kind Code[5] (if known)	Publication Date MM-DD-YYYY	Name of Patentee or Applicant of Cited Document	Pages, Columns, Lines, Where Relevant Passages Or Relevant Figures Appear	T[6]

Examiner Signature	/BRENDAN Y HIGA/	Date Considered	10/20/2020

*EXAMINER: Initial if reference considered, whether or not citation is in conformance with MPEP 609. Draw line through citation if not in conformance and not considered. Include copy of this form with next communication to applicant. [1] Applicant's unique citation designation number (optional). [2] See Kinds Codes of USPTO Patent Documents at www.uspto.gov or MPEP 901.04. [3] Enter Office that issued the document, by the two-letter code (WIPO Standard ST.3). [4] For Japanese patent documents, the indication of the year of the reign of the Emperor must precede the serial number of the patent document. [5] Kind of document by the appropriate symbols as indicated on the document under WIPO Standard ST.16 if possible. [6] Applicant is to place a check mark here if English language Translation is attached.

This collection of information is required by 37 CFR 1.97 and 1.98. The information is required to obtain or retain a benefit by the public which is to file (and by the USPTO to process) an application. Confidentiality is governed by 35 U.S.C. 122 and 37 CFR 1.14. This collection is estimated to take 2 hours to complete, including gathering, preparing, and submitting the completed application form to the USPTO. Time will vary depending upon the individual case. Any comments on the amount of time you require to complete this form and/or suggestions for reducing this burden, should be sent to the Chief Information Officer, U.S. Patent and Trademark Office, P.O. Box 1450, Alexandria, VA 22313-1450. DO NOT SEND FEES OR COMPLETED FORMS TO THIS ADDRESS. **SEND TO: Commissioner for Patents, P.O. Box 1450, Alexandria, VA 22313-1450.**

If you need assistance in completing the form, call 1-800-PTO-9199 (1-800-786-9199) and select option 2.

ALL REFERENCES CONSIDERED EXCEPT WHERE LINED THROUGH. /B.Y.H/

PTO/SB/08a (07-09)
Approved for use through 11/30/2020. OMB 0651-0031
U.S. Patent and Trademark Office; U.S. DEPARTMENT OF COMMERCE
Under the Paperwork Reduction Act of 1995, no persons are required to respond to a collection of information unless it contains a valid OMB control number.

Substitute for form 1449/PTO

INFORMATION DISCLOSURE STATEMENT BY APPLICANT

(Use as many sheets as necessary)

Sheet 2 of 2

Complete if Known	
Application Number	16/900,963
Filing Date	6/14/20
First Named Inventor	Taaghol
Art Unit	2441
Examiner Name	
Attorney Docket Number	TAAG001CONT2

U. S. PATENT DOCUMENTS

Examiner Initials*	Cite No.[1]	Document Number Number-Kind Code[2] (if known)	Publication Date MM-DD-YYYY	Name of Patentee or Applicant of Cited Document	Pages, Columns, Lines, Where Relevant Passages or Relevant Figures Appear
		US- 20120300615	11-2012	Kempf	
		US- 20130007254	01-2013	Fries	
		US- 20130160147	06-2013	Draluk	
		US- 20130263104	10-2013	Baset	
		US- 20140052976	02-2014	Marino	
		US- 20140241158	08-2014	Anthony, Jr.	
		US- 20140254373	09-2014	Varma	
		US- 20140259012	09-2014	Nandlall	
		US- 20140317293	10-2014	Shatzkamer	
		US- 20150173121	06-2015	Miklos	
		US- 20110265077	10-2011	Collison	
		US- 20120066665	03-2012	Kunze	
		US- 20120096071	04-2012	Murphey	
		US- 20130223442	08-2013	Narayanan	
		US- 20150160877	06-2015	Larkin	
		US- 20150242237	08-2015	Spivak	
		US- 20160224460	08-2016	Bryant	
		US- 20190165997	05-2019	Shaikh	
		US-			

FOREIGN PATENT DOCUMENTS

Examiner Initials*	Cite No.[1]	Foreign Patent Document Country Code[3]-Number[4]-Kind Code[5] (if known)	Publication Date MM-DD-YYYY	Name of Patentee or Applicant of Cited Document	Pages, Columns, Lines, Where Relevant Passages Or Relevant Figures Appear	T[6]

Examiner Signature	/BRENDAN Y HIGA/	Date Considered	10/20/2020

*EXAMINER: Initial if reference considered, whether or not citation is in conformance with MPEP 609. Draw line through citation if not in conformance and not considered. Include copy of this form with next communication to applicant. [1] Applicant's unique citation designation number (optional). [2] See Kinds Codes of USPTO Patent Documents at www.uspto.gov or MPEP 901.04. [3] Enter Office that issued the document, by the two-letter code (WIPO Standard ST.3). [4] For Japanese patent documents, the indication of the year of the reign of the Emperor must precede the serial number of the patent document. [5] Kind of document by the appropriate symbols as indicated on the document under WIPO Standard ST.16 if possible. [6] Applicant is to place a check mark here if English language Translation is attached.

This collection of information is required by 37 CFR 1.97 and 1.98. The information is required to obtain or retain a benefit by the public which is to file (and by the USPTO to process) an application. Confidentiality is governed by 35 U.S.C. 122 and 37 CFR 1.14. This collection is estimated to take 2 hours to complete, including gathering, preparing, and submitting the completed application form to the USPTO. Time will vary depending upon the individual case. Any comments on the amount of time you require to complete this form and/or suggestions for reducing this burden, should be sent to the Chief Information Officer, U.S. Patent and Trademark Office, P.O. Box 1450, Alexandria, VA 22313-1450. DO NOT SEND FEES OR COMPLETED FORMS TO THIS ADDRESS. **SEND TO: Commissioner for Patents, P.O. Box 1450, Alexandria, VA 22313-1450.**

If you need assistance in completing the form, call 1-800-PTO-9199 (1-800-786-9199) and select option 2.

ALL REFERENCES CONSIDERED EXCEPT WHERE LINED THROUGH. /B.Y.H/

Bibliographic Data

Application No: 16/900,963

Foreign Priority claimed: ○ Yes ◉ No

35 USC 119 (a-d) conditions met: ☐ Yes ☑ No | ☐ Met After Allowance

Verified and Acknowledged: /BRENDAN Y HIGA/ (Examiner's Signature) | BH (Initials)

Title: Distributed Software Defined Networking

FILING or 371(c) DATE	CLASS	GROUP ART UNIT	ATTORNEY DOCKET NO.
06/14/2020 **RULE**	709	2441	TAAG001CONT1

APPLICANTS

Big Data Federation, Inc., Santa Clara, CA,

INVENTORS

Pouya Taaghol, San Jose, CA, UNITED STATES

Vivek Ramanna, San Jose, CA, UNITED STATES

CONTINUING DATA

This application is a CON of 15836824 12/09/2017 PAT 10686871

15836824 is a CON of 14295331 06/04/2014 PAT 9843624

14295331 has PRO of 61834807 06/13/2013

FOREIGN APPLICATIONS

IF REQUIRED, FOREIGN LICENSE GRANTED**

06/22/2020

**** SMALL ENTITY ****

STATE OR COUNTRY

UNITED STATES

ADDRESS

Roark IP
1438 Dahlia Loop
San Jose, CA 95126
UNITED STATES

FILING FEE RECEIVED

$785

EAST Search History

EAST Search History (Prior Art)

Ref #	Hits	Search Query	DBs	Default Operator	Plurals	Time Stamp
L1	107,809	(H04L41/08-082 H04L45/563 H04L67/34).cpc.	US-PGPUB; USPAT; USOCR; FPRS; EPO; JPO; DERWENT; IBM_TDB	OR	ON	2020/11/06 14:59
L3	300,695	(open$1flow $3SDN software adj2 network$3 mobile$1flow)	US-PGPUB; USPAT; USOCR; FPRS; EPO; JPO; DERWENT; IBM_TDB	OR	ON	2020/11/06 15:00
L4	1,087,180	(VM cloud server) adj10 (application web$1app app service)	US-PGPUB; USPAT; USOCR; FPRS; EPO; JPO; DERWENT; IBM_TDB	OR	ON	2020/11/06 15:01
L8	3,433	1 and 3 and 4 and (@pd @ptad @prad @ad @rlad)<"20130613"	US-PGPUB; USPAT; USOCR; FPRS; EPO; JPO; DERWENT; IBM_TDB	OR	ON	2020/11/06 15:02
L9	157,425	4 same (version$3 updat$3 recent$3 up$1grad$3)	US-PGPUB; USPAT; USOCR; FPRS; EPO; JPO; DERWENT; IBM_TDB	OR	ON	2020/11/06 15:02
L10	1,286	8 and 9	US-PGPUB; USPAT; USOCR; FPRS; EPO; JPO; DERWENT; IBM_TDB	OR	ON	2020/11/06 15:02

L12	23,527	(key hash$3 token authenticat$3 authoriz$3 authorization) same 9	US-PGPUB; USPAT; USOCR; FPRS; EPO; JPO; DERWENT; IBM_TDB	OR	ON	2020/11/06 15:06
L13	319	10 and 12	US-PGPUB; USPAT; USOCR; FPRS; EPO; JPO; DERWENT; IBM_TDB	OR	ON	2020/11/06 15:06
L20	3	(("20120266156") or ("7890543") or ("20060271341")).PN.	US-PGPUB; USPAT; USOCR	OR	OFF	2020/11/06 16:46
S58	90	("20020016954" | "20040107417" | "20040237081" | "20050246703" | "20070078988" | "20080209491" | "20090007091" | "20090113327" | "20090276771" | "20090300057" | "20110075611" | "20110265077" | "20120066665" | "20120096071" | "20120300615" | "20130007254" | "20130160147" | "20130223442" | "20130263104" | "20140052976" | "20140241158" | "20140254373" | "20140259012" | "20140317293" | "20150160877" | "20150173121" | "20150242237" | "20160224460" | "20190165997" | "7114021" | "7630706" | "8132166" | "8528108" | "8650299" | "8756595" | "8843933" | "9226333").PN.	US-PGPUB; USPAT; USOCR; FPRS; EPO; JPO; DERWENT; IBM_TDB	OR	ON	2020/10/27 18:48
S59	4	((("Ramanna") near3 ("Vivek"))).INV.	US-PGPUB; USPAT; USOCR	OR	ON	2020/10/27 18:48
S60	1,635	distribut$3 adj2 (Software adj2 defin$3 adj2 Network (SDN)) d$1sdn	US-PGPUB; USPAT; USOCR; FPRS; EPO; JPO; DERWENT; IBM_TDB	OR	ON	2020/10/27 18:48
S61	4	(S58 S59) and S60	US-PGPUB; USPAT; USOCR	OR	ON	2020/10/27 18:48
S62	0	S61 and (@pd @ptad @prad @ad @rlad)<"20130613"	US-PGPUB; USPAT;	OR	ON	2020/10/27 18:49

			USOCR; FPRS; EPO; JPO; DERWENT; IBM_TDB			
S64	1,250	(hyper$2visor virutal$10 VM container sandbox$4) adj25 (application web$1app app service) same (open$1flow $3SDN software adj2 network$3 mobile$1flow)	US-PGPUB; USPAT; USOCR; FPRS; EPO; JPO; DERWENT; IBM_TDB	OR	ON	2020/10/29 11:01
S65	80,277	(H04L67/10 H04L29/08135).cpc.	US-PGPUB; USPAT; USOCR; FPRS; EPO; JPO; DERWENT; IBM_TDB	OR	ON	2020/10/29 11:02
S66	177,028	(H04L41/08-082 H04L45/563 H04L67/34 G06F8/60-61,65,70-71,76).cpc.	US-PGPUB; USPAT; USOCR; FPRS; EPO; JPO; DERWENT; IBM_TDB	OR	ON	2020/10/29 11:02
S67	148,851	(version$3 updat$3 recent$3 up$1grad$3) adj15 (authenticat$3 password authentic key check$1sum authoriz$6)	US-PGPUB; USPAT; USOCR; FPRS; EPO; JPO; DERWENT; IBM_TDB	OR	ON	2020/10/29 11:03
S68	7	S63 and S66 and S67	US-PGPUB; USPAT; USOCR; FPRS; EPO; JPO; DERWENT; IBM_TDB	OR	ON	2020/10/29 11:05
S69	1	S68 and (@pd @ptad @prad @ad @rlad)<"20130613"	US-PGPUB; USPAT; USOCR; FPRS; EPO; JPO; DERWENT; IBM_TDB	OR	ON	2020/10/29 11:05
S70	191,079	(hyper$2visor virutal$10 VM container sandbox$4) adj25 (application web$1app app service)	US-PGPUB; USPAT; USOCR;	OR	ON	2020/10/29 11:06

			FPRS; EPO; JPO; DERWENT; IBM_TDB			
S71	290	S65 and S66 and S70 and S67	US-PGPUB; USPAT; USOCR; FPRS; EPO; JPO; DERWENT; IBM_TDB	OR	ON	2020/10/29 11:07
S72	106	S71 and (@pd @ptad @prad @ad @rlad)<"20130613"	US-PGPUB; USPAT; USOCR; FPRS; EPO; JPO; DERWENT; IBM_TDB	OR	ON	2020/10/29 11:07
S73	300,195	(open$1flow $3SDN software adj2 network$3 mobile$1flow)	US-PGPUB; USPAT; USOCR; FPRS; EPO; JPO; DERWENT; IBM_TDB	OR	ON	2020/10/29 11:10
S74	217,529	(hyper$2visor virutal$10 VM container sandbox$4) adj25 (instance application web$1app app service)	US-PGPUB; USPAT; USOCR; FPRS; EPO; JPO; DERWENT; IBM_TDB	OR	ON	2020/10/29 11:11
S75	351	S74 same S67	US-PGPUB; USPAT; USOCR; FPRS; EPO; JPO; DERWENT; IBM_TDB	OR	ON	2020/10/29 11:12
S76	62	S73 and S75	US-PGPUB; USPAT; USOCR; FPRS; EPO; JPO; DERWENT; IBM_TDB	OR	ON	2020/10/29 11:12
S77	35	S76 and (@pd @ptad @prad @ad @rlad)<"20130613"	US-PGPUB; USPAT; USOCR; FPRS; EPO;	OR	ON	2020/10/29 11:12

			JPO; DERWENT; IBM_TDB			
S78	3	distribut$3 adj2 (Software adj2 defin$3 adj2 Network (SDN)) near d$1sdn	US-PGPUB; USPAT; USOCR; FPRS; EPO; JPO; DERWENT; IBM_TDB	OR	ON	2020/10/29 11:23
S79	1,124,509	(portal web web$1sit$3 web$1pag$3 store merchant market$1place) adj15 (instance application web$1app app service)	US-PGPUB; USPAT; USOCR; FPRS; EPO; JPO; DERWENT; IBM_TDB	OR	ON	2020/10/29 11:25
S80	576,468	(version$3 updat$3 recent$3 up$1grad$3) adj15 (instance application web$1app app service)	US-PGPUB; USPAT; USOCR; FPRS; EPO; JPO; DERWENT; IBM_TDB	OR	ON	2020/10/29 11:26
S81	68,247	S79 same S80	US-PGPUB; USPAT; USOCR; FPRS; EPO; JPO; DERWENT; IBM_TDB	OR	ON	2020/10/29 11:26
S82	1,471	S73 and S74 and S81	US-PGPUB; USPAT; USOCR; FPRS; EPO; JPO; DERWENT; IBM_TDB	OR	ON	2020/10/29 11:27
S83	197	S65 and S82 and (@pd @ptad @prad @ad @rlad)<"20130613"	US-PGPUB; USPAT; USOCR; FPRS; EPO; JPO; DERWENT; IBM_TDB	OR	ON	2020/10/29 11:27

EAST Search History (Interference)

Ref #	Hits	Search Query	DBs	Default Operator	Plurals	Time Stamp
L2	39,880	(H04L41/08-082 H04L45/563 H04L67/34).cpc.	US-PGPUB; USPAT	OR	ON	2020/11/06 14:59
L5	112,790	(VM cloud server) adj10 (application web$1app app service).clm.	US-PGPUB; USPAT	OR	ON	2020/11/06 15:01
L6	13,114	(open$1flow $3SDN software adj2 network$3 mobile$1flow).clm.	US-PGPUB; USPAT	OR	ON	2020/11/06 15:01
L11	522,289	(key hash$3 token authenticat$3 authoriz$3 authorization).clm.	US-PGPUB; USPAT	OR	ON	2020/11/06 15:06
L14	28	2 and 5 and 6 and 11	US-PGPUB; USPAT	OR	ON	2020/11/06 15:07
L15	17	14 and (@pd @ptad @prad @ad @rlad)<"20130613"	US-PGPUB; USPAT	OR	ON	2020/11/06 15:07

11/6/2020 5:14:12 PM
C:\Users\bhiga\Documents\EAST\Workspaces\16900963.wsp

IQQueryQuickExport-202011062144

Main Concept Document
==========
US10686871
Title: Distributed software defined networking

Concept Modifiers (1)
==========
1. More Like Text: deploying and upgrading distributed applications

Filters (1)
==========
Publication Date: To 2013-06-13

Options
=======
De-dup: None
Cut-off: None
Sort: Relevance

Content: Patents + NPL (189)
==========
US Patents
US Designs
US Applications
EPO Patents
EPO Applications
China Patents
China Applications
Japan Patents
Japan Applications
Korea Patents
Korea Applications
WIPO Applications
Argentina Patents
Argentina Applications
Brazil Patents
Brazil Applications
Canada Patents
Canada Applications
Chile Patents
Chile Applications
Colombia Applications

Costa Rica Applications
Cuba Patents
Cuba Applications
Dominican Republic Applications
Ecuador Patents
Ecuador Applications
El Salvador Applications
Guatemala Applications
Honduras Applications
Mexico Patents
Mexico Applications
Nicaragua Patents
Panama Applications
Peru Applications
Trinidad & Tobago Patents
Uruguay Applications
Austria Patents
Austria Applications
Belarus Patents
Belgium Patents
Belgium Applications
Bosnia & Herzegovina Patents
Bosnia & Herzegovina Applications
Bulgaria Patents
Bulgaria Applications
Croatia Patents
Croatia Applications
Czech Republic Patents
Czech Republic Applications
Czechoslovakia Patents
Czechoslovakia Applications
Denmark Patents
Denmark Applications
Estonia Patents
Estonia Applications
EUIPO Patents
Finland Patents
Finland Applications
France Patents
France Applications
Germany Patents
Germany Applications
Great Britain Patents
Great Britain Applications
Greece Patents
Greece Applications
Hungary Patents
Hungary Applications

Iceland Patents
Iceland Applications
Ireland Patents
Ireland Applications
Italy Patents
Italy Applications
Latvia Patents
Latvia Applications
Lithuania Patents
Lithuania Applications
Luxembourg Patents
Malta Patents
Monaco Patents
Montenegro Patents
Montenegro Applications
Netherlands Patents
Netherlands Applications
Norway Patents
Norway Applications
Poland Patents
Poland Applications
Portugal Patents
Portugal Applications
Republic of Moldova Patents
Republic of Moldova Applications
Romania Patents
Romania Applications
San Marino Patents
San Marino Applications
Serbia Patents
Serbia Applications
Slovakia Patents
Slovakia Applications
Slovenia Patents
Spain Patents
Spain Applications
Sweden Patents
Sweden Applications
Switzerland Patents
Switzerland Applications
Ukraine Patents
Yugoslavia/Serbia and Montenegro Patents
Yugoslavia/Serbia and Montenegro Applications
Armenia Patents
Australia Patents
Australia Applications
Cyprus Patents
Gulf Cooperation Council Patents

Hong Kong Patents
India Patents
India Applications
Indonesia Patents
Indonesia Applications
Israel Applications
Jordan Patents
Kyrgyzstan Patents
Macao Applications
Malaysia Patents
Mongolia Patents
New Zealand Patents
Philippines Patents
Philippines Applications
Saudi Arabia Patents
Singapore Patents
Singapore Applications
Taiwan Patents
Taiwan Applications
Tajikistan Patents
Tajikistan Applications
Thailand Applications
Uzbekistan Patents
Vietnam Patents
Algeria Patents
ARIPO Patents
ARIPO Applications
Egypt Patents
Kenya Patents
Malawi Patents
Morocco Patents
Morocco Applications
OAPI Patents
South Africa Patents
Tunisia Applications
Zambia Patents
Zimbabwe Patents
EAPO Patents
EAPO Applications
Georgia Patents
Georgia Applications
Kazakhstan Patents
Kazakhstan Applications
Russia Patents
Russia Applications
Turkey Patents
Turkey Applications
IEEE Xplore Publications: IEEE Periodicals

IQQueryQuickExport-202011062144
IEEE Xplore Publications: IEEE Conferences
IEEE Xplore Publications: IEEE Standards
IEEE Xplore Publications: IEEE Early Access
IEEE Xplore Publications: IET Periodicals
IEEE Xplore Publications: IET Conferences
IEEE Xplore Publications: SMPTE Periodicals
IEEE Xplore Publications: SMPTE Conferences
IEEE Xplore Publications: SMPTE Standards
IEEE Xplore Publications: MIT Press eBooks
IEEE Xplore Publications: Wiley-IEEE eBooks
IEEE Xplore Publications: IBM Periodicals
IEEE Xplore Publications: URSI Periodicals
IEEE Xplore Publications: VDE Conferences
IEEE Xplore Publications: Periodicals from China
IP.com Prior Art Database: The IP.com Journal
IP.com Prior Art Database: Internet Society RFC
IP.com Prior Art Database: IBM TDB Archive
IP.com Prior Art Database: Legacy Journals
IP.com Prior Art Database: Software Patent Institute
OnePetro.org: Periodicals at OnePetro.org
OnePetro.org: Conferences at OnePetro.org
OnePetro.org: Standards at OnePetro.org
Other Literature: IBM Redbooks
Other Literature: PubMed Central

Application Number	Application/Control No.	Applicant(s)/Patent under Reexamination	
* 16/900,963 *	16/900,963	Taaghol et al.	
	Examiner	**Art Unit**	
	HIGA, BRENDAN Y	2441	

Document Code - DISQ	**Internal Document - DO NOT MAIL**

TERMINAL DISCLAIMER	☑ APPROVED	☐ DISAPPROVED
Date Filed: **04 November 2020**	**This patent is subject to a Terminal Disclaimer**	

Approved/Disapproved by:

2/Tds both approved.
/LAWANA R HIXON/

Technology Center: OPLC

Telephone: (571)272-6074

_____

PTO/AIA/26 (04-14)
Approved for use through 11/30/2020. OMB 0651-0031
U.S. Patent and Trademark Office; U.S. DEPARTMENT OF COMMERCE
Under the Paperwork Reduction Act of 1995, no persons are required to respond to a collection of information unless it displays a valid OMB control number.

TERMINAL DISCLAIMER TO OBVIATE A DOUBLE PATENTING REJECTION OVER A "PRIOR" PATENT	Docket Number (Optional)

In re Application of: TAAGHOL

Application No.: 16/900,963

Filed: 6/14/2020

For: Distributed Software Defined Networking

The applicant, Big Data Federation, Inc., owner of 100 percent interest in the instant application hereby disclaims, except as provided below, the terminal part of the statutory term of any patent granted on the instant application which would extend beyond the expiration date of the full statutory term of **prior patent** No. 9,843,624 as the term of said **prior patent** is presently shortened by any terminal disclaimer. The applicant hereby agrees that any patent so granted on the instant application shall be enforceable only for and during such period that it and the **prior patent** are commonly owned. This agreement runs with any patent granted on the instant application and is binding upon the grantee, its successors or assigns.

In making the above disclaimer, the applicant does not disclaim the terminal part of the term of any patent granted on the instant application that would extend to the expiration date of the full statutory term of the **prior patent**, "as the term of said **prior patent** is presently shortened by any terminal disclaimer," in the event that said **prior patent** later:

expires for failure to pay a maintenance fee;
is held unenforceable;
is found invalid by a court of competent jurisdiction;
is statutorily disclaimed in whole or terminally disclaimed under 37 CFR 1.321;
has all claims canceled by a reexamination certificate;
is reissued; or
is in any manner terminated prior to the expiration of its full statutory term as presently shortened by any terminal disclaimer.

Check either box 1 or 2 below, if appropriate.

1. ☐ The undersigned is the applicant. If the applicant is an assignee, the undersigned is authorized to act on behalf of the assignee.

I hereby acknowledge that any willful false statements made are punishable under 18 U.S.C. 1001 by fine or imprisonment of not more than five (5) years, or both.

2. ☑ The undersigned is an attorney or agent of record. Reg. No. 40,394

/Christopher J. Horgan/	11/4/2020
Signature	Date

Christopher J. Horgan
Typed or printed name

Attorney for Applicant	408-687-8306
Title	Telephone Number

☑ Terminal disclaimer fee under 37 CFR 1.20(d) included.

WARNING: Information on this form may become public. Credit card information should not be included on this form. Provide credit card information and authorization on PTO-2038.

This collection of information is required by 37 CFR 1.321. The information is required to obtain or retain a benefit by the public which is to file (and by the USPTO to process) an application. Confidentiality is governed by 35 U.S.C. 122 and 37 CFR 1.11 and 1.14. This collection is estimated to take 12 minutes to complete, including gathering, preparing, and submitting the completed application form to the USPTO. Time will vary depending upon the individual case. Any comments on the amount of time you require to complete this form and/or suggestions for reducing this burden, should be sent to the Chief Information Officer, U.S. Patent and Trademark Office, U.S. Department of Commerce, P.O. Box 1450, Alexandria, VA 22313-1450. DO NOT SEND FEES OR COMPLETED FORMS TO THIS ADDRESS. **SEND TO: Commissioner for Patents, P.O. Box 1450, Alexandria, VA 22313-1450.**

If you need assistance in completing the form, call 1-800-PTO-9199 and select option 2.

PTO/AIA/26 (04-14)
Approved for use through 11/30/2020. OMB 0651-0031
U.S. Patent and Trademark Office; U.S. DEPARTMENT OF COMMERCE
Under the Paperwork Reduction Act of 1995, no persons are required to respond to a collection of information unless it displays a valid OMB control number.

TERMINAL DISCLAIMER TO OBVIATE A DOUBLE PATENTING REJECTION OVER A "PRIOR" PATENT

Docket Number (Optional)

In re Application of: TAAGHOL

Application No.: 16/900,963

Filed: 6/14/2020

For: Distributed Software Defined Networking

The applicant, Big Data Federation, Inc., owner of 100 percent interest in the instant application hereby disclaims, except as provided below, the terminal part of the statutory term of any patent granted on the instant application which would extend beyond the expiration date of the full statutory term of **prior patent** No. 10,686,871 as the term of said **prior patent** is presently shortened by any terminal disclaimer. The applicant hereby agrees that any patent so granted on the instant application shall be enforceable only for and during such period that it and the **prior patent** are commonly owned. This agreement runs with any patent granted on the instant application and is binding upon the grantee, its successors or assigns.

In making the above disclaimer, the applicant does not disclaim the terminal part of the term of any patent granted on the instant application that would extend to the expiration date of the full statutory term of the **prior patent**, "as the term of said **prior patent** is presently shortened by any terminal disclaimer," in the event that said **prior patent** later:

expires for failure to pay a maintenance fee;
is held unenforceable;
is found invalid by a court of competent jurisdiction;
is statutorily disclaimed in whole or terminally disclaimed under 37 CFR 1.321;
has all claims canceled by a reexamination certificate;
is reissued; or
is in any manner terminated prior to the expiration of its full statutory term as presently shortened by any terminal disclaimer.

Check either box 1 or 2 below, if appropriate.

1. ☐ The undersigned is the applicant. If the applicant is an assignee, the undersigned is authorized to act on behalf of the assignee.

I hereby acknowledge that any willful false statements made are punishable under 18 U.S.C. 1001 by fine or imprisonment of not more than five (5) years, or both.

2. ☑ The undersigned is an attorney or agent of record. Reg. No. 40,394

/Christopher J. Horgan/	11/4/2020
Signature	Date
Christopher J. Horgan	
Typed or printed name	
Attorney for Applicant	408-687-8306
Title	Telephone Number

☑ Terminal disclaimer fee under 37 CFR 1.20(d) included.

WARNING: Information on this form may become public. Credit card information should not be included on this form. Provide credit card information and authorization on PTO-2038.

This collection of information is required by 37 CFR 1.321. The information is required to obtain or retain a benefit by the public which is to file (and by the USPTO to process) an application. Confidentiality is governed by 35 U.S.C. 122 and 37 CFR 1.11 and 1.14. This collection is estimated to take 12 minutes to complete, including gathering, preparing, and submitting the completed application form to the USPTO. Time will vary depending upon the individual case. Any comments on the amount of time you require to complete this form and/or suggestions for reducing this burden, should be sent to the Chief Information Officer, U.S. Patent and Trademark Office, U.S. Department of Commerce, P.O. Box 1450, Alexandria, VA 22313-1450. DO NOT SEND FEES OR COMPLETED FORMS TO THIS ADDRESS. **SEND TO: Commissioner for Patents, P.O. Box 1450, Alexandria, VA 22313-1450.**

If you need assistance in completing the form, call 1-800-PTO-9199 and select option 2.

Electronic Acknowledgement Receipt

EFS ID:	41036130
Application Number:	16900963
International Application Number:	
Confirmation Number:	2579
Title of Invention:	Distributed Software Defined Networking
First Named Inventor/Applicant Name:	Pouya Taaghol
Customer Number:	112449
Filer:	Christopher James Horgan
Filer Authorized By:	
Attorney Docket Number:	TAAG001CONT1
Receipt Date:	04-NOV-2020
Filing Date:	14-JUN-2020
Time Stamp:	15:51:12
Application Type:	Utility under 35 USC 111(a)

Payment information:

Submitted with Payment	no

File Listing:

Document Number	Document Description	File Name	File Size(Bytes)/ Message Digest	Multi Part /.zip	Pages (if appl.)
1	Terminal Disclaimer Filed	TAAG001CONT2_TD1v2.pdf	141579 ae683b5d5123e73f2b518f6a04afe2a6e51d13fb	no	1

Warnings:

Information:					
2	Terminal Disclaimer Filed	TAAG001CONT2_TD2v2.pdf	141573 072ea5379fd7ee20cc5501fd643c19dba74a2436	no	1
Warnings:					
Information:					
		Total Files Size (in bytes):	283152		

This Acknowledgement Receipt evidences receipt on the noted date by the USPTO of the indicated documents, characterized by the applicant, and including page counts, where applicable. It serves as evidence of receipt similar to a Post Card, as described in MPEP 503.

New Applications Under 35 U.S.C. 111
If a new application is being filed and the application includes the necessary components for a filing date (see 37 CFR 1.53(b)-(d) and MPEP 506), a Filing Receipt (37 CFR 1.54) will be issued in due course and the date shown on this Acknowledgement Receipt will establish the filing date of the application.
National Stage of an International Application under 35 U.S.C. 371
If a timely submission to enter the national stage of an international application is compliant with the conditions of 35 U.S.C. 371 and other applicable requirements a Form PCT/DO/EO/903 indicating acceptance of the application as a national stage submission under 35 U.S.C. 371 will be issued in addition to the Filing Receipt, in due course.
New International Application Filed with the USPTO as a Receiving Office
If a new international application is being filed and the international application includes the necessary components for an international filing date (see PCT Article 11 and MPEP 1810), a Notification of the International Application Number and of the International Filing Date (Form PCT/RO/105) will be issued in due course, subject to prescriptions concerning national security, and the date shown on this Acknowledgement Receipt will establish the international filing date of the application.

Application Number	Application/Control No.	Applicant(s)/Patent under Reexamination	
* 16/900,963 *	16/900,963	Taaghol et al.	
	Examiner	**Art Unit**	
	HIGA, BRENDAN Y	2441	

Document Code - DISQ	**Internal Document - DO NOT MAIL**

TERMINAL DISCLAIMER	☐ APPROVED	☑ DISAPPROVED
Date Filed: **29 October 2020**	**This patent is subject to a Terminal Disclaimer**	

Approved/Disapproved by:

/JEAN PROCTOR/

Technology Center: OPLC

Telephone: (571)272-1040

2 td's The application number of the application being examined (or the number of the patent under ree~am or reissue) is not
identified or incorrect. (16/908,963)

UNITED STATES PATENT AND TRADEMARK OFFICE

UNITED STATES DEPARTMENT OF COMMERCE
United States Patent and Trademark Office
Address: COMMISSIONER FOR PATENTS
P.O. Box 1450
Alexandria, Virginia 22313-1450
www.uspto.gov

APPLICATION NUMBER	FILING OR 371(C) DATE	FIRST NAMED APPLICANT	ATTY. DOCKET NO./TITLE
16/900,963	06/14/2020	Pouya Taaghol	TAAG001CONT1

CONFIRMATION NO. 2579

112449
Roark IP
1438 Dahlia Loop
San Jose, CA 95126

POA ACCEPTANCE LETTER

OC000000121045823

Date Mailed: 11/02/2020

NOTICE OF ACCEPTANCE OF POWER OF ATTORNEY

This is in response to the Power of Attorney filed 10/29/2020.

The Power of Attorney in this application is accepted. Correspondence in this application will be mailed to the above address as provided by 37 CFR 1.33.

Questions about the contents of this notice and the requirements it sets forth should be directed to the Office of Data Management, Application Assistance Unit, at **(571) 272-4000** or **(571) 272-4200** or **1-888-786-0101**.

/sleutchit/

Doc Code: PA..
Document Description: Power of Attorney

PTO/AIA/82A (07-13)
Approved for use through 03/31/2021. OMB 0651-0035
U.S. Patent and Trademark Office; U.S. DEPARTMENT OF COMMERCE
Under the Paperwork Reduction Act of 1995, no persons are required to respond to a collection of information unless it displays a valid OMB control number.

TRANSMITTAL FOR POWER OF ATTORNEY TO ONE OR MORE REGISTERED PRACTITIONERS

NOTE: This form is to be submitted with the Power of Attorney by Applicant form (PTO/AIA/82B) to identify the application to which the Power of Attorney is directed, in accordance with 37 CFR 1.5, unless the application number and filing date are identified in the Power of Attorney by Applicant form. If neither form PTO/AIA/82A nor form PTO/AIA82B identifies the application to which the Power of Attorney is directed, the Power of Attorney will not be recognized in the application.

Application Number	15/836,824
Filing Date	12/9/2017
First Named Inventor	Taaghol
Title	Distributed Software Defined Networking
Art Unit	2441
Examiner Name	Higa
Attorney Docket Number	TAAG001CONT1

SIGNATURE of Applicant or Patent Practitioner

Signature	/Christopher J. Horgan/	Date (Optional)	April 17, 2020
Name	Christopher J. Horgan	Registration Number	40,394
Title (if Applicant is a juristic entity)			
Applicant Name (if Applicant is a juristic entity)			

NOTE: This form must be signed in accordance with 37 CFR 1.33. See 37 CFR 1.4(d) for signature requirements and certifications. If more than one applicant, use multiple forms.

☑ *Total of 1 forms are submitted.

This collection of information is required by 37 CFR 1.131, 1.32, and 1.33. The information is required to obtain or retain a benefit by the public which is to file (and by the USPTO to process) an application. Confidentiality is governed by 35 U.S.C. 122 and 37 CFR 1.11 and 1.14. This collection is estimated to take 3 minutes to complete, including gathering, preparing, and submitting the completed application form to the USPTO. Time will vary depending upon the individual case. Any comments on the amount of time you require to complete this form and/or suggestions for reducing this burden, should be sent to the Chief Information Officer, U.S. Patent and Trademark Office, U.S. Department of Commerce, P.O. Box 1450, Alexandria, VA 22313-1450. DO NOT SEND FEES OR COMPLETED FORMS TO THIS ADDRESS. **SEND TO: Commissioner for Patents, P.O. Box 1450, Alexandria, VA 22313-1450.**

If you need assistance in completing the form, call 1-800-PTO-9199 and select option 2.

Doc Code: PA..
Document Description: Power of Attorney

PTO/AIA/82B (07-13)
Approved for use through 03/31/2021. OMB 0651-0035
U.S. Patent and Trademark Office; U.S. DEPARTMENT OF COMMERCE
Under the Paperwork Reduction Act of 1995, no persons are required to respond to a collection of information unless it displays a valid OMB control number

POWER OF ATTORNEY BY APPLICANT

I hereby revoke all previous powers of attorney given in the application identified in either the attached transmittal letter or the boxes below.

Application Number	Filing Date
15/836,824	12/9/2017

(Note: The boxes above may be left blank if information is provided on form PTO/AIA/82A.)

☑ I hereby appoint the Patent Practitioner(s) associated with the following Customer Number as my/our attorney(s) or agent(s), and to transact all business in the United States Patent and Trademark Office connected therewith for the application referenced in the attached transmittal letter (form PTO/AIA/82A) or identified above: 112449

OR

☐ I hereby appoint Practitioner(s) named in the attached list (form PTO/AIA/82C) as my/our attorney(s) or agent(s), and to transact all business in the United States Patent and Trademark Office connected therewith for the patent application referenced in the attached transmittal letter (form PTO/AIA/82A) or identified above. (Note: Complete form PTO/AIA/82C.)

Please recognize or change the correspondence address for the application identified in the attached transmittal letter or the boxes above to:

☑ The address associated with the above-mentioned Customer Number

OR

☐ The address associated with Customer Number:

OR

☐ Firm or Individual Name					
Address					
City		State		Zip	
Country					
Telephone		Email			

I am the Applicant (if the Applicant is a juristic entity, list the Applicant name in the box):

Big Data Federation, Inc.

☐ Inventor or Joint Inventor (title not required below)

☐ Legal Representative of a Deceased or Legally Incapacitated Inventor (title not required below)

☑ Assignee or Person to Whom the Inventor is Under an Obligation to Assign (provide signer's title if applicant is a juristic entity)

☐ Person Who Otherwise Shows Sufficient Proprietary Interest (e.g., a petition under 37 CFR 1.46(b)(2) was granted in the application or is concurrently being filed with this document) (provide signer's title if applicant is a juristic entity)

SIGNATURE of Applicant for Patent

The undersigned (whose title is supplied below) is authorized to act on behalf of the applicant (e.g., where the applicant is a juristic entity).

Signature		Date (Optional)	1/26/2020
Name	Pouya Taaghol		
Title	CEO, Big Data Federation, Inc.		

NOTE: Signature - This form must be signed by the applicant in accordance with 37 CFR 1.33. See 37 CFR 1.4 for signature requirements and certifications. If more than one applicant, use multiple forms.

☑ Total of 1 forms are submitted.

This collection of information is required by 37 CFR 1.131, 1.32, and 1.33. The information is required to obtain or retain a benefit by the public which is to file (and by the USPTO to process) an application. Confidentiality is governed by 35 U.S.C. 122 and 37 CFR 1.11 and 1.14. This collection is estimated to take 3 minutes to complete, including gathering, preparing, and submitting the completed application form to the USPTO. Time will vary depending upon the individual case. Any comments on the amount of time you require to complete this form and/or suggestions for reducing this burden, should be sent to the Chief Information Officer, U.S. Patent and Trademark Office, U.S. Department of Commerce, P.O. Box 1450, Alexandria, VA 22313-1450. DO NOT SEND FEES OR COMPLETED FORMS TO THIS ADDRESS. **SEND TO: Commissioner for Patents, P.O. Box 1450, Alexandria, VA 22313-1450.**

If you need assistance in completing the form, call 1-800-PTO-9199 and select option 2.

PTO/AIA/26 (04-14)
Approved for use through 11/30/2020. OMB 0651-0031
U.S. Patent and Trademark Office; U.S. DEPARTMENT OF COMMERCE
Under the Paperwork Reduction Act of 1995, no persons are required to respond to a collection of information unless it displays a valid OMB control number.

TERMINAL DISCLAIMER TO OBVIATE A DOUBLE PATENTING REJECTION OVER A "PRIOR" PATENT

Docket Number (Optional) TAAG001CONT2

In re Application of: TAAGHOL

Application No.: 16/908,963

Filed: 6/14/2020

For: DISTRIBUTED SOFTWARE DEFINED NETWORKING

The applicant, Big Data Federation, Inc., owner of 100 percent interest in the instant application hereby disclaims, except as provided below, the terminal part of the statutory term of any patent granted on the instant application which would extend beyond the expiration date of the full statutory term of **prior patent** No. 9,843,624 as the term of said **prior patent** is presently shortened by any terminal disclaimer. The applicant hereby agrees that any patent so granted on the instant application shall be enforceable only for and during such period that it and the **prior patent** are commonly owned. This agreement runs with any patent granted on the instant application and is binding upon the grantee, its successors or assigns.

In making the above disclaimer, the applicant does not disclaim the terminal part of the term of any patent granted on the instant application that would extend to the expiration date of the full statutory term of the **prior patent**, "as the term of said **prior patent** is presently shortened by any terminal disclaimer," in the event that said **prior patent** later:

expires for failure to pay a maintenance fee;
is held unenforceable;
is found invalid by a court of competent jurisdiction;
is statutorily disclaimed in whole or terminally disclaimed under 37 CFR 1.321;
has all claims canceled by a reexamination certificate;
is reissued; or
is in any manner terminated prior to the expiration of its full statutory term as presently shortened by any terminal disclaimer.

Check either box 1 or 2 below, if appropriate.

1. ☐ The undersigned is the applicant. If the applicant is an assignee, the undersigned is authorized to act on behalf of the assignee.

I hereby acknowledge that any willful false statements made are punishable under 18 U.S.C. 1001 by fine or imprisonment of not more than five (5) years, or both.

2. ☑ The undersigned is an attorney or agent of record. Reg. No. 40,394

/Christopher J. Horgan/	10/29/2020
Signature	Date
Christopher J. Horgan	
Typed or printed name	
Attorney for Applicant	408-687-8306
Title	Telephone Number

☑ Terminal disclaimer fee under 37 CFR 1.20(d) included.

WARNING: Information on this form may become public. Credit card information should not be included on this form. Provide credit card information and authorization on PTO-2038.

This collection of information is required by 37 CFR 1.321. The information is required to obtain or retain a benefit by the public which is to file (and by the USPTO to process) an application. Confidentiality is governed by 35 U.S.C. 122 and 37 CFR 1.11 and 1.14. This collection is estimated to take 12 minutes to complete, including gathering, preparing, and submitting the completed application form to the USPTO. Time will vary depending upon the individual case. Any comments on the amount of time you require to complete this form and/or suggestions for reducing this burden, should be sent to the Chief Information Officer, U.S. Patent and Trademark Office, U.S. Department of Commerce, P.O. Box 1450, Alexandria, VA 22313-1450. DO NOT SEND FEES OR COMPLETED FORMS TO THIS ADDRESS. **SEND TO: Commissioner for Patents, P.O. Box 1450, Alexandria, VA 22313-1450.**

If you need assistance in completing the form, call 1-800-PTO-9199 and select option 2.

PTO/AIA/26 (04-14)
Approved for use through 11/30/2020. OMB 0651-0031
U.S. Patent and Trademark Office; U.S. DEPARTMENT OF COMMERCE
Under the Paperwork Reduction Act of 1995, no persons are required to respond to a collection of information unless it displays a valid OMB control number.

TERMINAL DISCLAIMER TO OBVIATE A DOUBLE PATENTING REJECTION OVER A "PRIOR" PATENT

Docket Number (Optional) TAAG001CONT2

In re Application of: TAAGHOL

Application No.: 16/908,963

Filed: 6/14/2020

For: DISTRIBUTED SOFTWARE DEFINED NETWORKING

The applicant, Big Data Federation, Inc., owner of 100 percent interest in the instant application hereby disclaims, except as provided below, the terminal part of the statutory term of any patent granted on the instant application which would extend beyond the expiration date of the full statutory term of **prior patent** No. 10,686,871 as the term of said **prior patent** is presently shortened by any terminal disclaimer. The applicant hereby agrees that any patent so granted on the instant application shall be enforceable only for and during such period that it and the **prior patent** are commonly owned. This agreement runs with any patent granted on the instant application and is binding upon the grantee, its successors or assigns.

In making the above disclaimer, the applicant does not disclaim the terminal part of the term of any patent granted on the instant application that would extend to the expiration date of the full statutory term of the **prior patent**, "as the term of said **prior patent** is presently shortened by any terminal disclaimer," in the event that said **prior patent** later:

expires for failure to pay a maintenance fee;
is held unenforceable;
is found invalid by a court of competent jurisdiction;
is statutorily disclaimed in whole or terminally disclaimed under 37 CFR 1.321;
has all claims canceled by a reexamination certificate;
is reissued; or
is in any manner terminated prior to the expiration of its full statutory term as presently shortened by any terminal disclaimer.

Check either box 1 or 2 below, if appropriate.

1. ☐ The undersigned is the applicant. If the applicant is an assignee, the undersigned is authorized to act on behalf of the assignee.

I hereby acknowledge that any willful false statements made are punishable under 18 U.S.C. 1001 by fine or imprisonment of not more than five (5) years, or both.

2. ☑ The undersigned is an attorney or agent of record. Reg. No. 40,394

/Christopher J. Horgan/	10/29/2020
Signature	Date
Christopher J. Horgan	
Typed or printed name	
Attorney for Applicant	408-687-8306
Title	Telephone Number

☑ Terminal disclaimer fee under 37 CFR 1.20(d) included.

WARNING: Information on this form may become public. Credit card information should not be included on this form. Provide credit card information and authorization on PTO-2038.

This collection of information is required by 37 CFR 1.321. The information is required to obtain or retain a benefit by the public which is to file (and by the USPTO to process) an application. Confidentiality is governed by 35 U.S.C. 122 and 37 CFR 1.11 and 1.14. This collection is estimated to take 12 minutes to complete, including gathering, preparing, and submitting the completed application form to the USPTO. Time will vary depending upon the individual case. Any comments on the amount of time you require to complete this form and/or suggestions for reducing this burden, should be sent to the Chief Information Officer, U.S. Patent and Trademark Office, U.S. Department of Commerce, P.O. Box 1450, Alexandria, VA 22313-1450. DO NOT SEND FEES OR COMPLETED FORMS TO THIS ADDRESS. **SEND TO: Commissioner for Patents, P.O. Box 1450, Alexandria, VA 22313-1450.**

If you need assistance in completing the form, call 1-800-PTO-9199 and select option 2.

Electronic Patent Application Fee Transmittal

Application Number:	16900963
Filing Date:	14-Jun-2020
Title of Invention:	Distributed Software Defined Networking
First Named Inventor/Applicant Name:	Pouya Taaghol
Filer:	Christopher James Horgan
Attorney Docket Number:	TAAG001CONT2

Filed as Small Entity

Filing Fees for Utility under 35 USC 111(a)

Description	Fee Code	Quantity	Amount	Sub-Total in USD($)
Basic Filing:				
Pages:				
Claims:				
Miscellaneous-Filing:				
Petition:				
Patent-Appeals-and-Interference:				
Post-Allowance-and-Post-Issuance:				
Extension-of-Time:				

Description	Fee Code	Quantity	Amount	Sub-Total in USD($)
Miscellaneous:				
STATUTORY OR TERMINAL DISCLAIMER	2814	2	170	340
		Total in USD ($)		**340**

Electronic Acknowledgement Receipt

EFS ID:	40990390
Application Number:	16900963
International Application Number:	
Confirmation Number:	2579
Title of Invention:	Distributed Software Defined Networking
First Named Inventor/Applicant Name:	Pouya Taaghol
Customer Number:	112449
Filer:	Christopher James Horgan
Filer Authorized By:	
Attorney Docket Number:	TAAG001CONT2
Receipt Date:	29-OCT-2020
Filing Date:	14-JUN-2020
Time Stamp:	22:24:35
Application Type:	Utility under 35 USC 111(a)

Payment information:

Submitted with Payment	yes
Payment Type	CARD
Payment was successfully received in RAM	$340
RAM confirmation Number	E20200SM28260754
Deposit Account	
Authorized User	
The Director of the USPTO is hereby authorized to charge indicated fees and credit any overpayment as follows:	

File Listing:

Document Number	Document Description	File Name	File Size(Bytes)/ Message Digest	Multi Part /.zip	Pages (if appl.)
1	Power of Attorney	TAAG001CONT2_POA.pdf	113482 c0c18c704e54487cae11054224f4673bffccd d28	no	2
Warnings:					
Information:					
2	Terminal Disclaimer Filed	TAAG001CONT2_TD1.pdf	141777 925be30b5c38627725006ab4c638ff1512ff 6331	no	1
Warnings:					
Information:					
3	Terminal Disclaimer Filed	TAAG001CONT2_TD2.pdf	141788 725fd685dfb4bf4ec7353ff6d205fc696f97c 944	no	1
Warnings:					
Information:					
4	Fee Worksheet (SB06)	fee-info.pdf	30596 a5470cdfa08c48fd244fe121728f738f86d6b 5df	no	2
Warnings:					
Information:					
		Total Files Size (in bytes):	427643		

This Acknowledgement Receipt evidences receipt on the noted date by the USPTO of the indicated documents, characterized by the applicant, and including page counts, where applicable. It serves as evidence of receipt similar to a Post Card, as described in MPEP 503.

New Applications Under 35 U.S.C. 111
If a new application is being filed and the application includes the necessary components for a filing date (see 37 CFR 1.53(b)-(d) and MPEP 506), a Filing Receipt (37 CFR 1.54) will be issued in due course and the date shown on this Acknowledgement Receipt will establish the filing date of the application.
National Stage of an International Application under 35 U.S.C. 371
If a timely submission to enter the national stage of an international application is compliant with the conditions of 35 U.S.C. 371 and other applicable requirements a Form PCT/DO/EO/903 indicating acceptance of the application as a national stage submission under 35 U.S.C. 371 will be issued in addition to the Filing Receipt, in due course.
New International Application Filed with the USPTO as a Receiving Office
If a new international application is being filed and the international application includes the necessary components for an international filing date (see PCT Article 11 and MPEP 1810), a Notification of the International Application Number and of the International Filing Date (Form PCT/RO/105) will be issued in due course, subject to prescriptions concerning national security, and the date shown on this Acknowledgement Receipt will establish the international filing date of the application.

IN THE UNITED STATES PATENT AND TRADEMARK OFFICE

In re Application of: Taaghol
Serial No.: 16/900,963
Filed: June 14, 2020
Attorney Docket No.: TAAG001CONT2

Examiner:
Art Unit:

For: Distributed Software Defined Networking

Commissioner for Patents
PO Box 1450
Alexandria, VA 22313-1450

Dear Sir:

INFORMATION DISCLOSURE STATEMENT

Applicant is submitting the accompanying Information Disclosure Statement under 37 CFR 1.97(b) and no fee is due.

Respectfully submitted,
ROARK IP
By: /Christopher J. Horgan/

Christopher J. Horgan
Registration No. 40,394
1438 Dahlia Loop
San Jose, CA 95126
Telephone: (408) 687-8306

Date: August 17, 2020

Exhibit 1002
Microsoft Corporation v. Edge Networking Systems, LLC
075

PTO/SB/08a (07-09)
Approved for use through 11/30/2020. OMB 0651-0031
U.S. Patent and Trademark Office; U.S. DEPARTMENT OF COMMERCE
Under the Paperwork Reduction Act of 1995, no persons are required to respond to a collection of information unless it contains a valid OMB control number.

Substitute for form 1449/PTO

INFORMATION DISCLOSURE STATEMENT BY APPLICANT

(Use as many sheets as necessary)

Sheet 1 of 2

Complete if Known	
Application Number	16/900,963
Filing Date	6/14/20
First Named Inventor	Taaghol
Art Unit	2441
Examiner Name	
Attorney Docket Number	TAAG001CONT2

U. S. PATENT DOCUMENTS

Examiner Initials*	Cite No.[1]	Document Number Number-Kind Code[2] (if known)	Publication Date MM-DD-YYYY	Name of Patentee or Applicant of Cited Document	Pages, Columns, Lines, Where Relevant Passages or Relevant Figures Appear
		US- 7114021	9-2006	Seshadri	
		US- 7630706	12-2009	Weigand	
		US- 8132166	3-2012	DeHaan	
		US- 8528108	9-2013	Ammer	
		US- 8650299	2-2014	Huang	
		US- 8756595	6-2014	Arcilla	
		US- 8843933	9-2014	Holler	
		US- 9226333	12-2015	Steiner	
		US- 20020016954	2-2002	Charisius	
		US- 20040107417	6-2004	Chia	
		US- 20040237081	11-2004	Homiller	
		US- 20050246703	11-2005	Ahonen	
		US- 20070078988	4-2007	Miloushev	
		US- 20080209491	8-2008	Hasek	
		US- 20090007091	1-2009	Appiah	
		US- 20090113327	4-2009	Pogrebinsky	
		US- 20090276771	11-2009	Nickolov	
		US- 20090300057	12-2009	Friedman	
		US- 20110075611	3-2011	Choi	

FOREIGN PATENT DOCUMENTS

Examiner Initials*	Cite No.[1]	Foreign Patent Document Country Code[3]-Number[4]-Kind Code[5] (if known)	Publication Date MM-DD-YYYY	Name of Patentee or Applicant of Cited Document	Pages, Columns, Lines, Where Relevant Passages Or Relevant Figures Appear	T[6]

Examiner Signature		Date Considered	

*EXAMINER: Initial if reference considered, whether or not citation is in conformance with MPEP 609. Draw line through citation if not in conformance and not considered. Include copy of this form with next communication to applicant. [1] Applicant's unique citation designation number (optional). [2] See Kinds Codes of USPTO Patent Documents at www.uspto.gov or MPEP 901.04. [3] Enter Office that issued the document, by the two-letter code (WIPO Standard ST.3). [4] For Japanese patent documents, the indication of the year of the reign of the Emperor must precede the serial number of the patent document. [5] Kind of document by the appropriate symbols as indicated on the document under WIPO Standard ST.16 if possible. [6] Applicant is to place a check mark here if English language Translation is attached.

This collection of information is required by 37 CFR 1.97 and 1.98. The information is required to obtain or retain a benefit by the public which is to file (and by the USPTO to process) an application. Confidentiality is governed by 35 U.S.C. 122 and 37 CFR 1.14. This collection is estimated to take 2 hours to complete, including gathering, preparing, and submitting the completed application form to the USPTO. Time will vary depending upon the individual case. Any comments on the amount of time you require to complete this form and/or suggestions for reducing this burden, should be sent to the Chief Information Officer, U.S. Patent and Trademark Office, P.O. Box 1450, Alexandria, VA 22313-1450. DO NOT SEND FEES OR COMPLETED FORMS TO THIS ADDRESS. **SEND TO: Commissioner for Patents, P.O. Box 1450, Alexandria, VA 22313-1450.**

If you need assistance in completing the form, call 1-800-PTO-9199 (1-800-786-9199) and select option 2.

PTO/SB/08a (07-09)
Approved for use through 11/30/2020. OMB 0651-0031
U.S. Patent and Trademark Office; U.S. DEPARTMENT OF COMMERCE
Under the Paperwork Reduction Act of 1995, no persons are required to respond to a collection of information unless it contains a valid OMB control number.

Substitute for form 1449/PTO

INFORMATION DISCLOSURE STATEMENT BY APPLICANT

(Use as many sheets as necessary)

Sheet 2 of 2

Complete if Known	
Application Number	16/900,963
Filing Date	6/14/20
First Named Inventor	Taaghol
Art Unit	2441
Examiner Name	
Attorney Docket Number	TAAG001CONT2

U. S. PATENT DOCUMENTS

Examiner Initials*	Cite No.[1]	Document Number Number-Kind Code[2] (if known)	Publication Date MM-DD-YYYY	Name of Patentee or Applicant of Cited Document	Pages, Columns, Lines, Where Relevant Passages or Relevant Figures Appear
		US- 20120300615	11-2012	Kempf	
		US- 20130007254	01-2013	Fries	
		US- 20130160147	06-2013	Draluk	
		US- 20130263104	10-2013	Baset	
		US- 20140052976	02-2014	Marino	
		US- 20140241158	08-2014	Anthony, Jr.	
		US- 20140254373	09-2014	Varma	
		US- 20140259012	09-2014	Nandlall	
		US- 20140317293	10-2014	Shatzkamer	
		US- 20150173121	06-2015	Miklos	
		US- 20110265077	10-2011	Collison	
		US- 20120066665	03-2012	Kunze	
		US- 20120096071	04-2012	Murphey	
		US- 20130223442	08-2013	Narayanan	
		US- 20150160877	06-2015	Larkin	
		US- 20150242237	08-2015	Spivak	
		US- 20160224460	08-2016	Bryant	
		US- 20190165997	05-2019	Shaikh	
		US-			

FOREIGN PATENT DOCUMENTS

Examiner Initials*	Cite No.[1]	Foreign Patent Document Country Code[3]-Number[4]-Kind Code[5] (if known)	Publication Date MM-DD-YYYY	Name of Patentee or Applicant of Cited Document	Pages, Columns, Lines, Where Relevant Passages Or Relevant Figures Appear	T[6]

Examiner Signature		Date Considered	

*EXAMINER: Initial if reference considered, whether or not citation is in conformance with MPEP 609. Draw line through citation if not in conformance and not considered. Include copy of this form with next communication to applicant. [1] Applicant's unique citation designation number (optional). [2] See Kinds Codes of USPTO Patent Documents at www.uspto.gov or MPEP 901.04. [3] Enter Office that issued the document, by the two-letter code (WIPO Standard ST.3). [4] For Japanese patent documents, the indication of the year of the reign of the Emperor must precede the serial number of the patent document. [5] Kind of document by the appropriate symbols as indicated on the document under WIPO Standard ST.16 if possible. [6] Applicant is to place a check mark here if English language Translation is attached.

This collection of information is required by 37 CFR 1.97 and 1.98. The information is required to obtain or retain a benefit by the public which is to file (and by the USPTO to process) an application. Confidentiality is governed by 35 U.S.C. 122 and 37 CFR 1.14. This collection is estimated to take 2 hours to complete, including gathering, preparing, and submitting the completed application form to the USPTO. Time will vary depending upon the individual case. Any comments on the amount of time you require to complete this form and/or suggestions for reducing this burden, should be sent to the Chief Information Officer, U.S. Patent and Trademark Office, P.O. Box 1450, Alexandria, VA 22313-1450. DO NOT SEND FEES OR COMPLETED FORMS TO THIS ADDRESS. **SEND TO: Commissioner for Patents, P.O. Box 1450, Alexandria, VA 22313-1450.**

If you need assistance in completing the form, call 1-800-PTO-9199 (1-800-786-9199) and select option 2.

Electronic Acknowledgement Receipt

EFS ID:	40308720
Application Number:	16900963
International Application Number:	
Confirmation Number:	2579
Title of Invention:	Distributed Software Defined Networking
First Named Inventor/Applicant Name:	Pouya Taaghol
Customer Number:	112449
Filer:	Christopher James Horgan
Filer Authorized By:	
Attorney Docket Number:	TAAG001CONT2
Receipt Date:	17-AUG-2020
Filing Date:	14-JUN-2020
Time Stamp:	22:02:25
Application Type:	Utility under 35 USC 111(a)

Payment information:

Submitted with Payment	no

File Listing:

Document Number	Document Description	File Name	File Size(Bytes)/ Message Digest	Multi Part /.zip	Pages (if appl.)
1	Information Disclosure Statement (IDS) Form (SB08)	TAAG002CONT2_IDS___.pdf	240555 743de2e79434a5dc5a09e3f496d7712256ce4456	no	3

Warnings:

Information:	
This is not an USPTO supplied IDS fillable form	
Total Files Size (in bytes):	240555

This Acknowledgement Receipt evidences receipt on the noted date by the USPTO of the indicated documents, characterized by the applicant, and including page counts, where applicable. It serves as evidence of receipt similar to a Post Card, as described in MPEP 503.

New Applications Under 35 U.S.C. 111
If a new application is being filed and the application includes the necessary components for a filing date (see 37 CFR 1.53(b)-(d) and MPEP 506), a Filing Receipt (37 CFR 1.54) will be issued in due course and the date shown on this Acknowledgement Receipt will establish the filing date of the application.
National Stage of an International Application under 35 U.S.C. 371
If a timely submission to enter the national stage of an international application is compliant with the conditions of 35 U.S.C. 371 and other applicable requirements a Form PCT/DO/EO/903 indicating acceptance of the application as a national stage submission under 35 U.S.C. 371 will be issued in addition to the Filing Receipt, in due course.
New International Application Filed with the USPTO as a Receiving Office
If a new international application is being filed and the international application includes the necessary components for an international filing date (see PCT Article 11 and MPEP 1810), a Notification of the International Application Number and of the International Filing Date (Form PCT/RO/105) will be issued in due course, subject to prescriptions concerning national security, and the date shown on this Acknowledgement Receipt will establish the international filing date of the application.

UNITED STATES PATENT AND TRADEMARK OFFICE

UNITED STATES DEPARTMENT OF COMMERCE
United States Patent and Trademark Office
Address: COMMISSIONER FOR PATENTS
P.O. Box 1450
Alexandria, Virginia 22313-1450
www.uspto.gov

APPLICATION NUMBER	FILING or 371(c) DATE	GRP ART UNIT	FIL FEE REC'D	ATTY.DOCKET.NO	TOT CLAIMS	IND CLAIMS
16/900,963	06/14/2020	2425	785	TAAG001CONT2	18	3

CONFIRMATION NO. 2579

FILING RECEIPT

112449
Roark IP
1438 Dahlia Loop
San Jose, CA 95126

OC000000117922818

Date Mailed: 06/22/2020

Receipt is acknowledged of this non-provisional utility patent application. The application will be taken up for examination in due course. Applicant will be notified as to the results of the examination. Any correspondence concerning the application must include the following identification information: the U.S. APPLICATION NUMBER, FILING DATE, NAME OF FIRST INVENTOR, and TITLE OF INVENTION. Fees transmitted by check or draft are subject to collection.

Please verify the accuracy of the data presented on this receipt. If an error is noted on this Filing Receipt, please submit a written request for a corrected Filing Receipt, including a properly marked-up ADS showing the changes with strike-through for deletions and underlining for additions. If you received a "Notice to File Missing Parts" or other Notice requiring a response for this application, please submit any request for correction to this Filing Receipt with your reply to the Notice. When the USPTO processes the reply to the Notice, the USPTO will generate another Filing Receipt incorporating the requested corrections provided that the request is grantable.

Inventor(s)

Pouya Taaghol, San Jose, CA;
Vivek Ramanna, San Jose, CA;

Applicant(s)

Big Data Federation, Inc., Santa Clara, CA;

Power of Attorney: None

Domestic Priority data as claimed by applicant

This application is a CON of 15/836,824 12/09/2017 PAT 10686871
which is a CON of 14/295,331 06/04/2014 PAT 9843624
which claims benefit of 61/834,807 06/13/2013

Foreign Applications for which priority is claimed (You may be eligible to benefit from the **Patent Prosecution Highway** program at the USPTO. Please see http://www.uspto.gov for more information.) - None.
Foreign application information must be provided in an Application Data Sheet in order to constitute a claim to foreign priority. See 37 CFR 1.55 and 1.76.

Permission to Access Application via Priority Document Exchange: No

Permission to Access Search Results: No

Applicant may provide or rescind an authorization for access using Form PTO/SB/39 or Form PTO/SB/69 as appropriate.

If Required, Foreign Filing License Granted: 06/22/2020

The country code and number of your priority application, to be used for filing abroad under the Paris Convention, is **US 16/900,963**

Projected Publication Date: Request for Non-Publication Acknowledged

Non-Publication Request: Yes

Early Publication Request: No
**** SMALL ENTITY ****
Title

Distributed Software Defined Networking

Preliminary Class

725

Statement under 37 CFR 1.55 or 1.78 for AIA (First Inventor to File) Transition Applications: No

PROTECTING YOUR INVENTION OUTSIDE THE UNITED STATES

Since the rights granted by a U.S. patent extend only throughout the territory of the United States and have no effect in a foreign country, an inventor who wishes patent protection in another country must apply for a patent in a specific country or in regional patent offices. Applicants may wish to consider the filing of an international application under the Patent Cooperation Treaty (PCT). An international (PCT) application generally has the same effect as a regular national patent application in each PCT-member country. The PCT process **simplifies** the filing of patent applications on the same invention in member countries, but **does not result** in a grant of "an international patent" and does not eliminate the need of applicants to file additional documents and fees in countries where patent protection is desired.

Almost every country has its own patent law, and a person desiring a patent in a particular country must make an application for patent in that country in accordance with its particular laws. Since the laws of many countries differ in various respects from the patent law of the United States, applicants are advised to seek guidance from specific foreign countries to ensure that patent rights are not lost prematurely.

Applicants also are advised that in the case of inventions made in the United States, the Director of the USPTO must issue a license before applicants can apply for a patent in a foreign country. The filing of a U.S. patent application serves as a request for a foreign filing license. The application's filing receipt contains further information and guidance as to the status of applicant's license for foreign filing.

Applicants may wish to consult the USPTO booklet, "General Information Concerning Patents" (specifically, the section entitled "Treaties and Foreign Patents") for more information on timeframes and deadlines for filing foreign patent applications. The guide is available either by contacting the USPTO Contact Center at 800-786-9199, or it can be viewed on the USPTO website at http://www.uspto.gov/web/offices/pac/doc/general/index.html.

For information on preventing theft of your intellectual property (patents, trademarks and copyrights), you may wish to consult the U.S. Government website, http://www.stopfakes.gov. Part of a Department of Commerce initiative, this website includes self-help "toolkits" giving innovators guidance on how to protect intellectual property in specific

countries such as China, Korea and Mexico. For questions regarding patent enforcement issues, applicants may call the U.S. Government hotline at 1-866-999-HALT (1-866-999-4258).

LICENSE FOR FOREIGN FILING UNDER

Title 35, United States Code, Section 184

Title 37, Code of Federal Regulations, 5.11 & 5.15

GRANTED

The applicant has been granted a license under 35 U.S.C. 184, if the phrase "IF REQUIRED, FOREIGN FILING LICENSE GRANTED" followed by a date appears on this form. Such licenses are issued in all applications where the conditions for issuance of a license have been met, regardless of whether or not a license may be required as set forth in 37 CFR 5.15. The scope and limitations of this license are set forth in 37 CFR 5.15(a) unless an earlier license has been issued under 37 CFR 5.15(b). The license is subject to revocation upon written notification. The date indicated is the effective date of the license, unless an earlier license of similar scope has been granted under 37 CFR 5.13 or 5.14.

This license is to be retained by the licensee and may be used at any time on or after the effective date thereof unless it is revoked. This license is automatically transferred to any related applications(s) filed under 37 CFR 1.53(d). This license is not retroactive.

The grant of a license does not in any way lessen the responsibility of a licensee for the security of the subject matter as imposed by any Government contract or the provisions of existing laws relating to espionage and the national security or the export of technical data. Licensees should apprise themselves of current regulations especially with respect to certain countries, of other agencies, particularly the Office of Defense Trade Controls, Department of State (with respect to Arms, Munitions and Implements of War (22 CFR 121-128)); the Bureau of Industry and Security, Department of Commerce (15 CFR parts 730-774); the Office of Foreign AssetsControl, Department of Treasury (31 CFR Parts 500+) and the Department of Energy.

NOT GRANTED

No license under 35 U.S.C. 184 has been granted at this time, if the phrase "IF REQUIRED, FOREIGN FILING LICENSE GRANTED" DOES NOT appear on this form. Applicant may still petition for a license under 37 CFR 5.12, if a license is desired before the expiration of 6 months from the filing date of the application. If 6 months has lapsed from the filing date of this application and the licensee has not received any indication of a secrecy order under 35 U.S.C. 181, the licensee may foreign file the application pursuant to 37 CFR 5.15(b).

SelectUSA

The United States represents the largest, most dynamic marketplace in the world and is an unparalleled location for business investment, innovation, and commercialization of new technologies. The U.S. offers tremendous resources and advantages for those who invest and manufacture goods here. Through SelectUSA, our nation works to promote and facilitate business investment. SelectUSA provides information assistance to the international investor community; serves as an ombudsman for existing and potential investors; advocates on behalf of U.S. cities, states, and regions competing for global investment; and counsels U.S. economic development organizations on investment attraction best practices. To learn more about why the United States is the best country in the world to develop

technology, manufacture products, deliver services, and grow your business, visit http://www.SelectUSA.gov or call +1-202-482-6800.

PATENT APPLICATION FEE DETERMINATION RECORD

Substitute for Form PTO-875

Application or Docket Number
16/900,963

APPLICATION AS FILED - PART I

FOR	(Column 1) NUMBER FILED	(Column 2) NUMBER EXTRA	SMALL ENTITY RATE($)	SMALL ENTITY FEE($)	OR	OTHER THAN SMALL ENTITY RATE($)	OTHER THAN SMALL ENTITY FEE($)
BASIC FEE (37 CFR 1.16(a), (b), or (c))	N/A	N/A	N/A	75		N/A	
SEARCH FEE (37 CFR 1.16(k), (i), or (m))	N/A	N/A	N/A	330		N/A	
EXAMINATION FEE (37 CFR 1.16(o), (p), or (q))	N/A	N/A	N/A	380		N/A	
TOTAL CLAIMS (37 CFR 1.16(i))	18 minus 20 =	*	x 50 =	0.00	OR		
INDEPENDENT CLAIMS (37 CFR 1.16(h))	3 minus 3 =	*	x 230 =	0.00			
APPLICATION SIZE FEE (37 CFR 1.16(s))	If the specification and drawings exceed 100 sheets of paper, the application size fee due is $310 ($155 for small entity) for each additional 50 sheets or fraction thereof. See 35 U.S.C. 41(a)(1)(G) and 37 CFR 1.16(s).			0.00			
MULTIPLE DEPENDENT CLAIM PRESENT (37 CFR 1.16(j))				0.00			
* If the difference in column 1 is less than zero, enter "0" in column 2.			TOTAL	785		TOTAL	

APPLICATION AS AMENDED - PART II

		(Column 1) CLAIMS REMAINING AFTER AMENDMENT		(Column 2) HIGHEST NUMBER PREVIOUSLY PAID FOR	(Column 3) PRESENT EXTRA	SMALL ENTITY RATE($)	SMALL ENTITY ADDITIONAL FEE($)	OR	OTHER THAN SMALL ENTITY RATE($)	OTHER THAN SMALL ENTITY ADDITIONAL FEE($)
AMENDMENT A	Total (37 CFR 1.16(i))	*	Minus	**	=	x =		OR	x =	
AMENDMENT A	Independent (37 CFR 1.16(h))	*	Minus	***	=	x =		OR	x =	
AMENDMENT A	Application Size Fee (37 CFR 1.16(s))									
AMENDMENT A	FIRST PRESENTATION OF MULTIPLE DEPENDENT CLAIM (37 CFR 1.16(j))							OR		
						TOTAL ADD'L FEE		OR	TOTAL ADD'L FEE	

		(Column 1) CLAIMS REMAINING AFTER AMENDMENT		(Column 2) HIGHEST NUMBER PREVIOUSLY PAID FOR	(Column 3) PRESENT EXTRA	RATE($)	ADDITIONAL FEE($)		RATE($)	ADDITIONAL FEE($)
AMENDMENT B	Total (37 CFR 1.16(i))	*	Minus	**	=	x =		OR	x =	
AMENDMENT B	Independent (37 CFR 1.16(h))	*	Minus	***	=	x =		OR	x =	
AMENDMENT B	Application Size Fee (37 CFR 1.16(s))									
AMENDMENT B	FIRST PRESENTATION OF MULTIPLE DEPENDENT CLAIM (37 CFR 1.16(j))							OR		
						TOTAL ADD'L FEE		OR	TOTAL ADD'L FEE	

* If the entry in column 1 is less than the entry in column 2, write "0" in column 3.
** If the "Highest Number Previously Paid For" IN THIS SPACE is less than 20, enter "20".
*** If the "Highest Number Previously Paid For" IN THIS SPACE is less than 3, enter "3".
The "Highest Number Previously Paid For" (Total or Independent) is the highest found in the appropriate box in column 1.

PTO/AIA/01 (06-12)
Approved for use through 01/31/2014. OMB 0651-0032
U.S. Patent and Trademark Office; U.S. DEPARTMENT OF COMMERCE
Under the Paperwork Reduction Act of 1995, no persons are required to respond to a collection of information unless it displays a valid OMB control number.

DECLARATION (37 CFR 1.63) FOR UTILITY OR DESIGN APPLICATION USING AN APPLICATION DATA SHEET (37 CFR 1.76)

Title of Invention	Distributed Software Defined Networking

As the below named inventor, I hereby declare that:

This declaration is directed to:

- [x] The attached application, or
- [ ] United States application or PCT international application number _____

  filed on _____.

The above-identified application was made or authorized to be made by me.

I believe that I am the original inventor or an original joint inventor of a claimed invention in the application.

I hereby acknowledge that any willful false statement made in this declaration is punishable under 18 U.S.C. 1001 by fine or imprisonment of not more than five (5) years, or both.

WARNING:

Petitioner/applicant is cautioned to avoid submitting personal information in documents filed in a patent application that may contribute to identity theft. Personal information such as social security numbers, bank account numbers, or credit card numbers (other than a check or credit card authorization form PTO-2038 submitted for payment purposes) is never required by the USPTO to support a petition or an application. If this type of personal information is included in documents submitted to the USPTO, petitioners/applicants should consider redacting such personal information from the documents before submitting them to the USPTO. Petitioner/applicant is advised that the record of a patent application is available to the public after publication of the application (unless a non-publication request in compliance with 37 CFR 1.213(a) is made in the application) or issuance of a patent. Furthermore, the record from an abandoned application may also be available to the public if the application is referenced in a published application or an issued patent (see 37 CFR 1.14). Checks and credit card authorization forms PTO-2038 submitted for payment purposes are not retained in the application file and therefore are not publicly available.

LEGAL NAME OF INVENTOR

Inventor: Vivek Ramanna Date (Optional) June 2, 2014

Signature: _____

Note: An application data sheet (PTO/SB/14 or equivalent), including naming the entire inventive entity, must accompany this form or must have been previously filed. Use an additional PTO/AIA/01 form for each additional inventor.

This collection of information is required by 35 U.S.C. 115 and 37 CFR 1.63. The information is required to obtain or retain a benefit by the public which is to file (and by the USPTO to process) an application. Confidentiality is governed by 35 U.S.C. 122 and 37 CFR 1.11 and 1.14. This collection is estimated to take 1 minute to complete, including gathering, preparing, and submitting the completed application form to the USPTO. Time will vary depending upon the individual case. Any comments on the amount of time you require to complete this form and/or suggestions for reducing this burden, should be sent to the Chief Information Officer, U.S. Patent and Trademark Office, U.S. Department of Commerce, P.O. Box 1450, Alexandria, VA 22313-1450. DO NOT SEND FEES OR COMPLETED FORMS TO THIS ADDRESS. **SEND TO: Commissioner for Patents, P.O. Box 1450, Alexandria, VA 22313-1450.**

If you need assistance in completing the form, call 1-800-PTO-9199 and select option 2.

PTO/AIA/01 (06-12)
Approved for use through 01/31/2014. OMB 0651-0032
U.S. Patent and Trademark Office; U.S. DEPARTMENT OF COMMERCE
Under the Paperwork Reduction Act of 1995, no persons are required to respond to a collection of information unless it displays a valid OMB control number.

DECLARATION (37 CFR 1.63) FOR UTILITY OR DESIGN APPLICATION USING AN APPLICATION DATA SHEET (37 CFR 1.76)

Title of Invention	Distributed Software Defined Networking

As the below named inventor, I hereby declare that:

This declaration is directed to:

- [x] The attached application, or
- [ ] United States application or PCT international application number _____

filed on _____.

The above-identified application was made or authorized to be made by me.

I believe that I am the original inventor or an original joint inventor of a claimed invention in the application.

I hereby acknowledge that any willful false statement made in this declaration is punishable under 18 U.S.C. 1001 by fine or imprisonment of not more than five (5) years, or both.

WARNING:

Petitioner/applicant is cautioned to avoid submitting personal information in documents filed in a patent application that may contribute to identity theft. Personal information such as social security numbers, bank account numbers, or credit card numbers (other than a check or credit card authorization form PTO-2038 submitted for payment purposes) is never required by the USPTO to support a petition or an application. If this type of personal information is included in documents submitted to the USPTO, petitioners/applicants should consider redacting such personal information from the documents before submitting them to the USPTO. Petitioner/applicant is advised that the record of a patent application is available to the public after publication of the application (unless a non-publication request in compliance with 37 CFR 1.213(a) is made in the application) or issuance of a patent. Furthermore, the record from an abandoned application may also be available to the public if the application is referenced in a published application or an issued patent (see 37 CFR 1.14). Checks and credit card authorization forms PTO-2038 submitted for payment purposes are not retained in the application file and therefore are not publicly available.

LEGAL NAME OF INVENTOR

Inventor: Pouya Taaghol Date (Optional): June 2, 2014

Signature: _____

Note: An application data sheet (PTO/SB/14 or equivalent), including naming the entire inventive entity, must accompany this form or must have been previously filed. Use an additional PTO/AIA/01 form for each additional inventor.

This collection of information is required by 35 U.S.C. 115 and 37 CFR 1.63. The information is required to obtain or retain a benefit by the public which is to file (and by the USPTO to process) an application. Confidentiality is governed by 35 U.S.C. 122 and 37 CFR 1.11 and 1.14. This collection is estimated to take 1 minute to complete, including gathering, preparing, and submitting the completed application form to the USPTO. Time will vary depending upon the individual case. Any comments on the amount of time you require to complete this form and/or suggestions for reducing this burden, should be sent to the Chief Information Officer, U.S. Patent and Trademark Office, U.S. Department of Commerce, P.O. Box 1450, Alexandria, VA 22313-1450. DO NOT SEND FEES OR COMPLETED FORMS TO THIS ADDRESS. **SEND TO: Commissioner for Patents, P.O. Box 1450, Alexandria, VA 22313-1450.**

If you need assistance in completing the form, call 1-800-PTO-9199 and select option 2.

PTO/AIA/14 (03-13)
Approved for use through 01/31/2014. OMB 0651-0032
U.S. Patent and Trademark Office; U.S. DEPARTMENT OF COMMERCE
Under the Paperwork Reduction Act of 1995, no persons are required to respond to a collection of information unless it contains a valid OMB control number.

Application Data Sheet 37 CFR 1.76	Attorney Docket Number	TAAG001CONT2
	Application Number	
Title of Invention	Distributed Software Defined Networking	

The application data sheet is part of the provisional or nonprovisional application for which it is being submitted. The following form contains the bibliographic data arranged in a format specified by the United States Patent and Trademark Office as outlined in 37 CFR 1.76. This document may be completed electronically and submitted to the Office in electronic format using the Electronic Filing System (EFS) or the document may be printed and included in a paper filed application.

Secrecy Order 37 CFR 5.2

☐ Portions or all of the application associated with this Application Data Sheet may fall under a Secrecy Order pursuant to 37 CFR 5.2 (Paper filers only. Applications that fall under Secrecy Order may not be filed electronically.)

Inventor Information:

Inventor 1 Remove

Legal Name

Prefix	Given Name	Middle Name	Family Name	Suffix
	Pouya		Taaghol	

Residence Information (Select One) ◉ US Residency ○ Non US Residency ○ Active US Military Service

City	San Jose	State/Province	CA	Country of Residence	US

Mailing Address of Inventor:

Address 1	1260 Trestlewood Lane
Address 2	
City	San Jose
State/Province	CA
Postal Code	95138
Country i	US

Inventor 2 Remove

Legal Name

Prefix	Given Name	Middle Name	Family Name	Suffix
	Vivek		Ramanna	

Residence Information (Select One) ◉ US Residency ○ Non US Residency ○ Active US Military Service

City	San Jose	State/Province	CA	Country of Residence	US

Mailing Address of Inventor:

Address 1	549 Manhattan Place
Address 2	
City	San Jose
State/Province	CA
Postal Code	95126
Country i	US

All Inventors Must Be Listed - Additional Inventor Information blocks may be generated within this form by selecting the **Add** button. Add

Correspondence Information:

Enter either Customer Number or complete the Correspondence Information section below. For further information see 37 CFR 1.33(a).

PTO/AIA/14 (03-13)
Approved for use through 01/31/2014. OMB 0651-0032
U.S. Patent and Trademark Office; U.S. DEPARTMENT OF COMMERCE
Under the Paperwork Reduction Act of 1995, no persons are required to respond to a collection of information unless it contains a valid OMB control number.

Application Data Sheet 37 CFR 1.76	Attorney Docket Number	TAAG001CONT2
	Application Number	
Title of Invention	Distributed Software Defined Networking	

☐ **An Address is being provided for the correspondence Information of this application.**

Customer Number	112449	
Email Address	chris.horgan@roarkip.com	Add Email / Remove Email

Application Information:

Title of the Invention	Distributed Software Defined Networking		
Attorney Docket Number	TAAG001CONT2	**Small Entity Status Claimed** ☒	
Application Type	Nonprovisional		
Subject Matter	Utility		
Total Number of Drawing Sheets (if any)	18	**Suggested Figure for Publication (if any)**	3

Publication Information:

☐ Request Early Publication (Fee required at time of Request 37 CFR 1.219)

☒ **Request Not to Publish.** I hereby request that the attached application not be published under 35 U.S.C. 122(b) and certify that the invention disclosed in the attached application **has not and will not** be the subject of an application filed in another country, or under a multilateral international agreement, that requires publication at eighteen months after filing.

Representative Information:

Representative information should be provided for all practitioners having a power of attorney in the application. Providing this information in the Application Data Sheet does not constitute a power of attorney in the application (see 37 CFR 1.32). Either enter Customer Number or complete the Representative Name section below. If both sections are completed the customer Number will be used for the Representative Information during processing.

Please Select One:	◉ Customer Number	○ US Patent Practitioner	○ Limited Recognition (37 CFR 11.9)
Customer Number	112449		

Domestic Benefit/National Stage Information:

This section allows for the applicant to either claim benefit under 35 U.S.C. 119(e), 120, 121, or 365(c) or indicate National Stage entry from a PCT application. Providing this information in the application data sheet constitutes the specific reference required by 35 U.S.C. 119(e) or 120, and 37 CFR 1.78.

Prior Application Status	Pending	Remove	
Application Number	Continuity Type	Prior Application Number	Filing Date (YYYY-MM-DD)
	Continuation of	15836824	2017-12-09
Prior Application Status	Pending	Remove	

Under the Paperwork Reduction Act of 1995, no persons are required to respond to a collection of information unless it contains a valid OMB control number.

Application Data Sheet 37 CFR 1.76	Attorney Docket Number	TAAG001CONT2
	Application Number	
Title of Invention	Distributed Software Defined Networking	

Application Number	Continuity Type	Prior Application Number	Filing Date (YYYY-MM-DD)
15836824	Continuation of	14295331	2014-06-04
Prior Application Status	Pending		Remove
Application Number	Continuity Type	Prior Application Number	Filing Date (YYYY-MM-DD)
14295331	non provisional of	61834807	2013-06-13

Additional Domestic Benefit/National Stage Data may be generated within this form by selecting the **Add** button.

Foreign Priority Information:

This section allows for the applicant to claim priority to a foreign application. Providing this information in the application data sheet constitutes the claim for priority as required by 35 U.S.C. 119(b) and 37 CFR 1.55(d). When priority is claimed to a foreign application that is eligible for retrieval under the priority document exchange program (PDX)[1] the information will be used by the Office to automatically attempt retrieval pursuant to 37 CFR 1.55(h)(1) and (2). Under the PDX program, applicant bears the ultimate responsibility for ensuring that a copy of the foreign application is received by the Office from the participating foreign intellectual property office, or a certified copy of the foreign priority application is filed, within the time period specified in 37 CFR 1.55(g)(1).

Remove

Application Number	Country[1]	Filing Date (YYYY-MM-DD)	Access Code[1] (if applicable)

Additional Foreign Priority Data may be generated within this form by selecting the **Add** button.

Statement under 37 CFR 1.55 or 1.78 for AIA (First Inventor to File) Transition Applications

☐ This application (1) claims priority to or the benefit of an application filed before March 16, 2013 and (2) also contains, or contained at any time, a claim to a claimed invention that has an effective filing date on or after March 16, 2013.
NOTE: By providing this statement under 37 CFR 1.55 or 1.78, this application, with a filing date on or after March 16, 2013, will be examined under the first inventor to file provisions of the AIA.

Authorization to Permit Access:

☐ Authorization to Permit Access to the Instant Application by the Participating Offices

PTO/AIA/14 (03-13)
Approved for use through 01/31/2014. OMB 0651-0032
U.S. Patent and Trademark Office; U.S. DEPARTMENT OF COMMERCE
Under the Paperwork Reduction Act of 1995, no persons are required to respond to a collection of information unless it contains a valid OMB control number.

Application Data Sheet 37 CFR 1.76	Attorney Docket Number	TAAG001CONT2
	Application Number	
Title of Invention	Distributed Software Defined Networking	

If checked, the undersigned hereby grants the USPTO authority to provide the European Patent Office (EPO), the Japan Patent Office (JPO), the Korean Intellectual Property Office (KIPO), the World Intellectual Property Office (WIPO), and any other intellectual property offices in which a foreign application claiming priority to the instant patent application is filed access to the instant patent application. See 37 CFR 1.14(c) and (h). This box should not be checked if the applicant does not wish the EPO, JPO, KIPO, WIPO, or other intellectual property office in which a foreign application claiming priority to the instant patent application is filed to have access to the instant patent application.

In accordance with 37 CFR 1.14(h)(3), access will be provided to a copy of the instant patent application with respect to: 1) the instant patent application-as-filed; 2) any foreign application to which the instant patent application claims priority under 35 U.S.C. 119(a)-(d) if a copy of the foreign application that satisfies the certified copy requirement of 37 CFR 1.55 has been filed in the instant patent application; and 3) any U.S. application-as-filed from which benefit is sought in the instant patent application.

In accordance with 37 CFR 1.14(c), access may be provided to information concerning the date o f filing this Authorization.

Applicant Information:

Providing assignment information in this section does not substitute for compliance with any requirement of part 3 of Title 37 of CFR to have an assignment recorded by the Office.

Applicant 1

If the applicant is the inventor (or the remaining joint inventor or inventors under 37 CFR 1.45), this section should not be completed. The information to be provided in this section is the name and address of the legal representative who is the applicant under 37 CFR 1.43; or the name and address of the assignee, person to whom the inventor is under an obligation to assign the invention, or person who otherwise shows sufficient proprietary interest in the matter who is the applicant under 37 CFR 1.46. If the applicant is an applicant under 37 CFR 1.46 (assignee, person to whom the inventor is obligated to assign, or person who otherwise shows sufficient proprietary interest) together with one or more joint inventors, then the joint inventor or inventors who are also the applicant should be identified in this section.

Clear

(●) Assignee ( ) Legal Representative under 35 U.S.C. 117 ( ) Joint Inventor

( ) Person to whom the inventor is obligated to assign. ( ) Person who shows sufficient proprietary interest

If applicant is the legal representative, indicate the authority to file the patent application, the inventor is:

Name of the Deceased or Legally Incapacitated Inventor :

If the Applicant is an Organization check here. ☒

Organization Name	Big Data Federation, Inc.		
Mailing Address Information For Applicant:			
Address 1	990 Linden Drive, #220		
Address 2			
City	Santa Clara	**State/Province**	CA
Country	US	Postal Code	95050
Phone Number	408-623-8529	Fax Number	

PTO/AIA/14 (03-13)
Approved for use through 01/31/2014. OMB 0651-0032
U.S. Patent and Trademark Office; U.S. DEPARTMENT OF COMMERCE
Under the Paperwork Reduction Act of 1995, no persons are required to respond to a collection of information unless it contains a valid OMB control number.

Application Data Sheet 37 CFR 1.76	Attorney Docket Number	TAAG001CONT2
	Application Number	
Title of Invention	Distributed Software Defined Networking	

Email Address	pouya@bigdatafeed.com

Additional Applicant Data may be generated within this form by selecting the Add button.

Non-Applicant Assignee Information:

Providing assignment information in this section does not subsitute for compliance with any requirement of part 3 of Title 37 of CFR to have an assignment recorded by the Office.

Assignee 1

Complete this section only if non-applicant assignee information is desired to be included on the patent application publication in accordance with 37 CFR 1.215(b). Do not include in this section an applicant under 37 CFR 1.46 (assignee, person to whom the inventor is obligated to assign, or person who otherwise shows sufficient proprietary interest), as the patent application publication will include the name of the applicant(s).

If the Assignee is an Organization check here. ☐

Prefix	**Given Name**	Middle Name	**Family Name**	Suffix

Mailing Address Information For Non-Applicant Assignee:

Address 1			
Address 2			
City		**State/Province**	
Country i		Postal Code	
Phone Number		Fax Number	
Email Address			

Additional Assignee Data may be generated within this form by selecting the Add button.

Signature:

NOTE: This form must be signed in accordance with 37 CFR 1.33. See 37 CFR 1.4 for signature requirements and certifications.

Signature	/Christopher J. Horgan/			Date (YYYY-MM-DD)	2020-06-14
First Name	Christopher	Last Name	Horgan	Registration Number	40394

Additional Signature may be generated within this form by selecting the Add button.

Exhibit 1002
Microsoft Corporation v. Edge Networking Systems, LLC
092

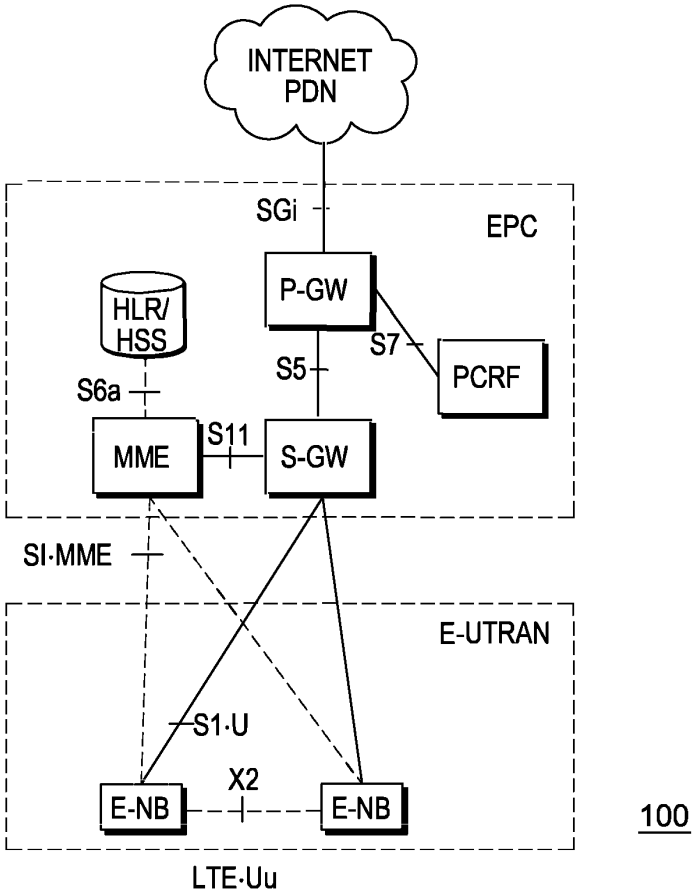

FIG. 1

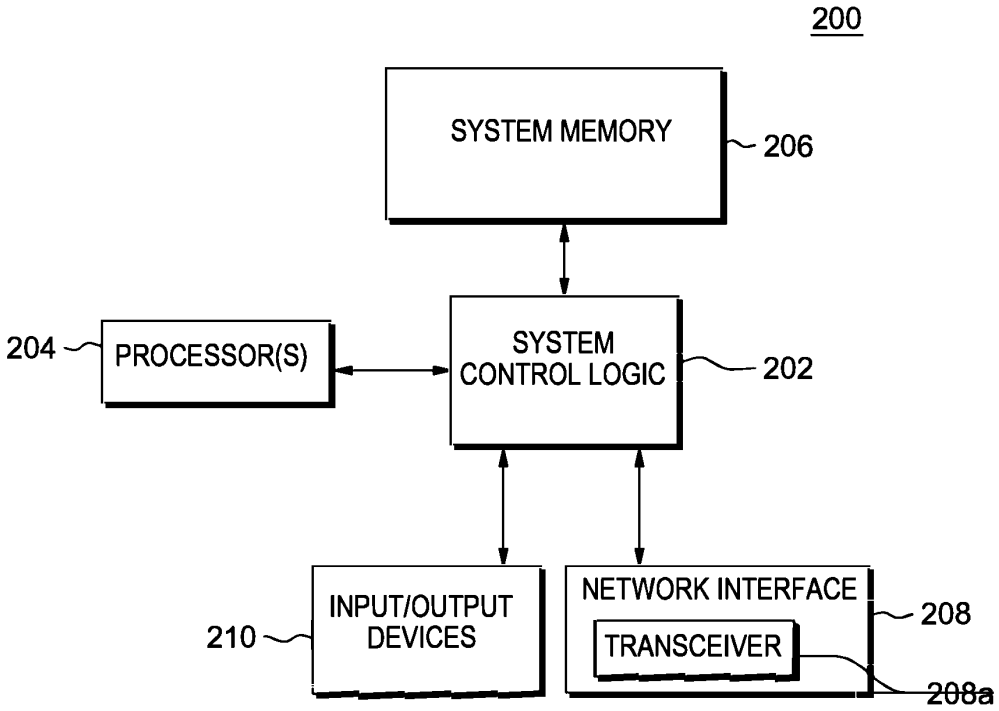
200
SYSTEM MEMORY
206
204
PROCESSOR(S)
SYSTEM
CONTROL LOGIC
202
210
INPUT/OUTPUT
DEVICES
NETWORK INTERFACE
208
TRANSCEIVER
208a

FIG. 2

Exhibit 1002
Microsoft Corporation v. Edge Networking Systems, LLC
094

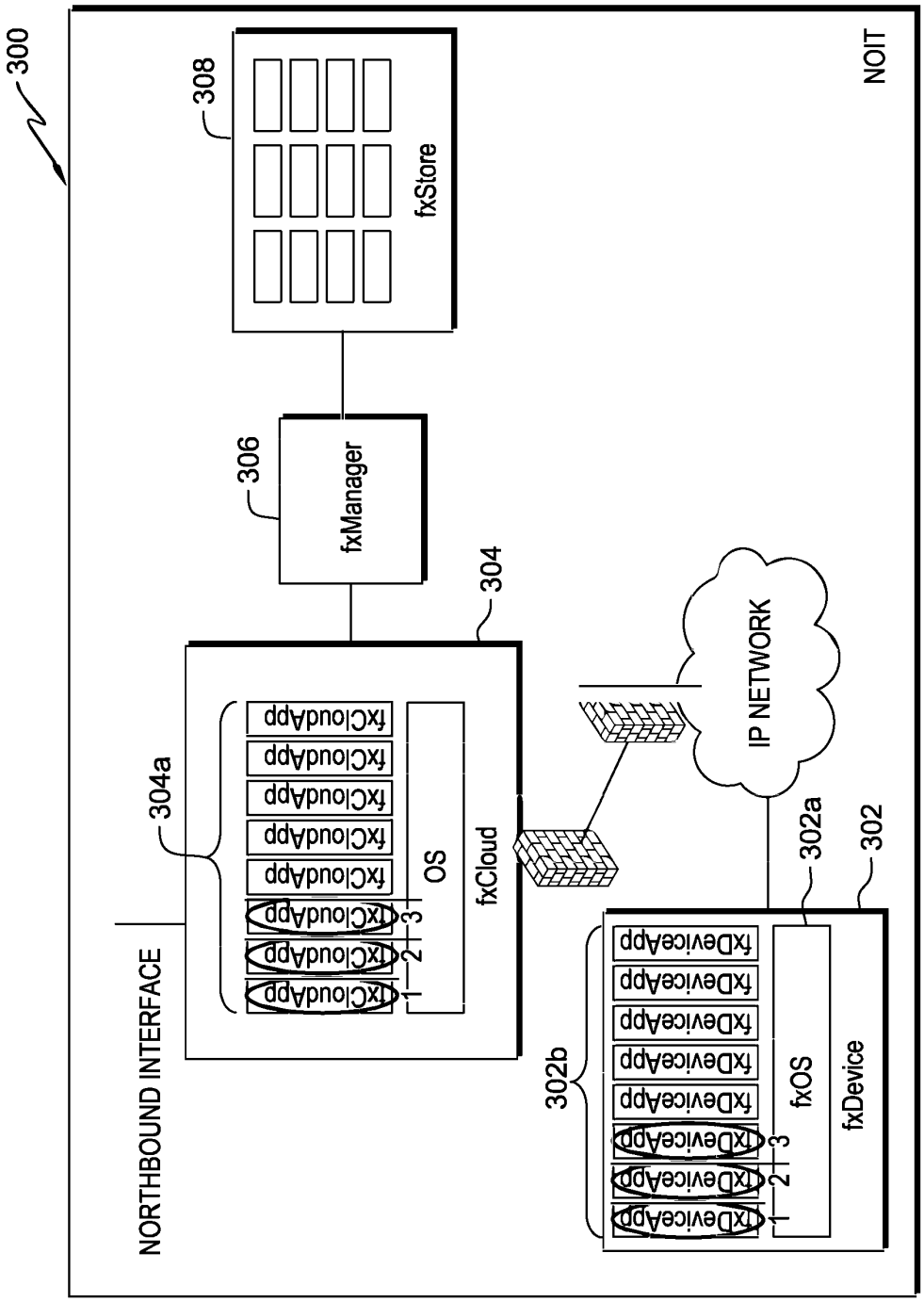

FIG. 3

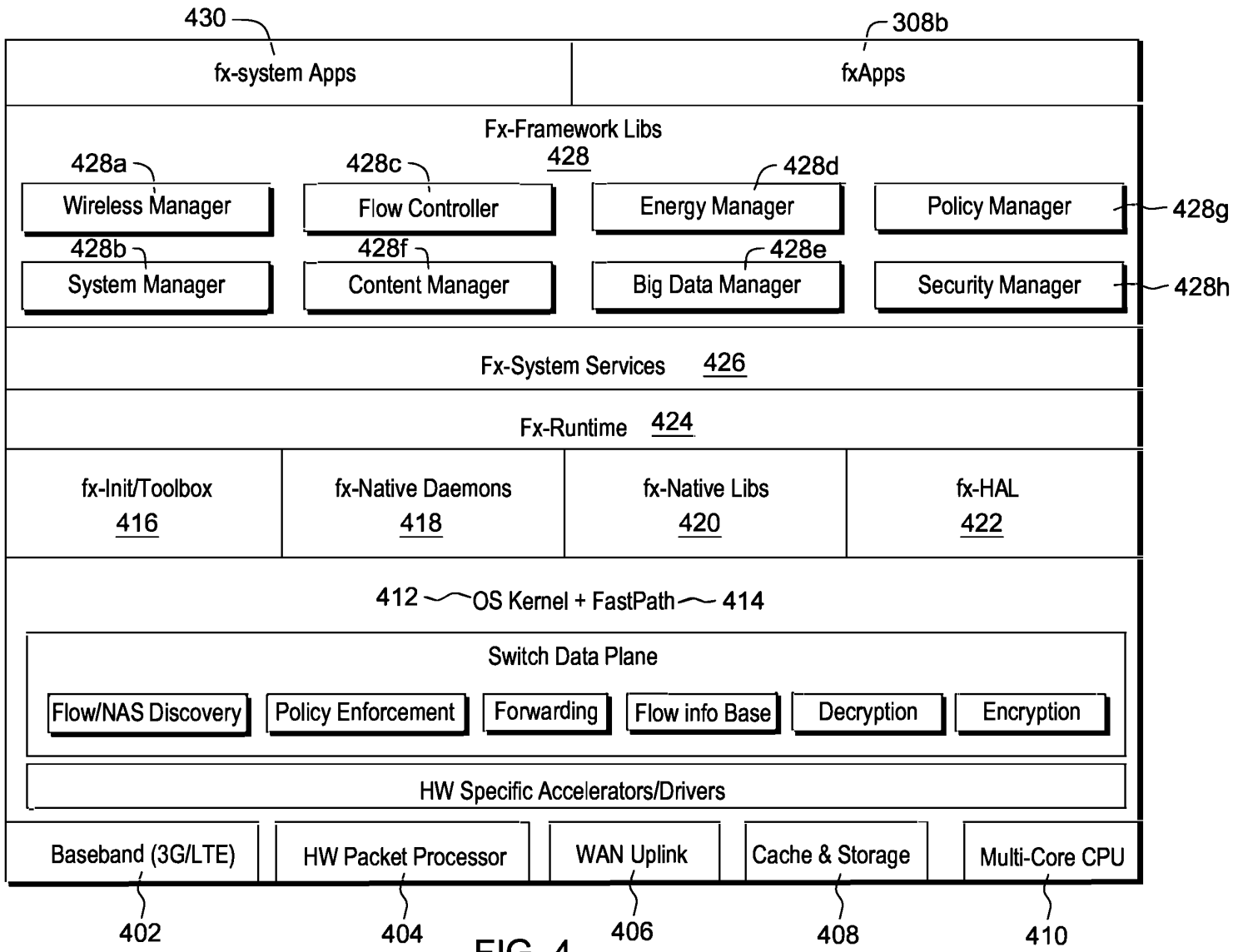
430
fx-system Apps
308b
fxApps
Fx-Framework Libs
428
428a
Wireless Manager
428c
Flow Controller
428d
Energy Manager
Policy Manager
428g
428b
System Manager
428f
Content Manager
428e
Big Data Manager
Security Manager
428h
Fx-System Services 426
Fx-Runtime 424
fx-Init/Toolbox
416
fx-Native Daemons
418
fx-Native Libs
420
fx-HAL
422
412
OS Kernel + FastPath
414
Switch Data Plane
Flow/NAS Discovery
Policy Enforcement
Forwarding
Flow info Base
Decryption
Encryption
HW Specific Accelerators/Drivers
Baseband (3G/LTE)
HW Packet Processor
WAN Uplink
Cache & Storage
Multi-Core CPU
402
404
406
408
410

FIG. 4

Exhibit 1002
Microsoft Corporation v. Edge Networking Systems, LLC
096

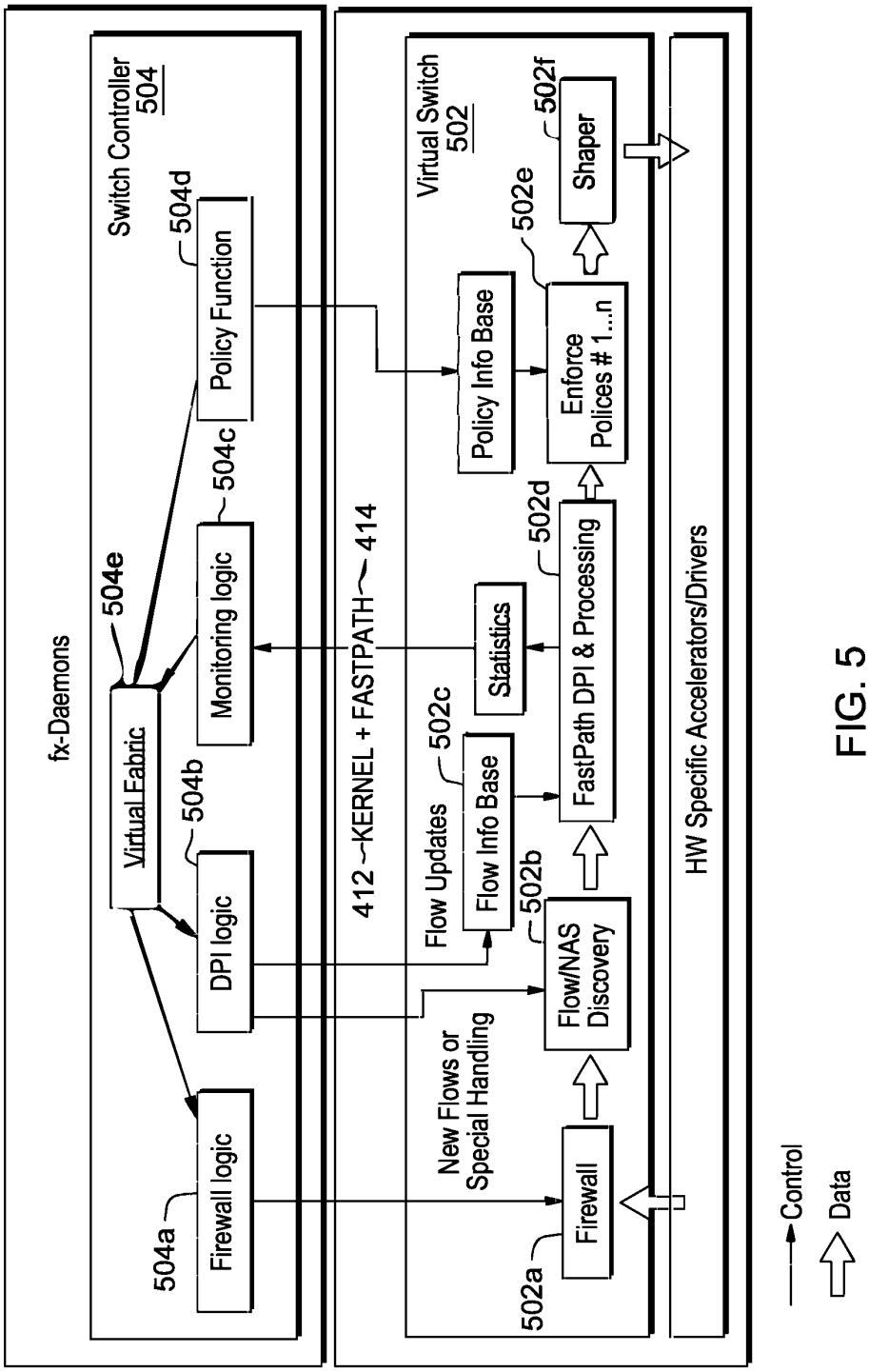

FIG. 5

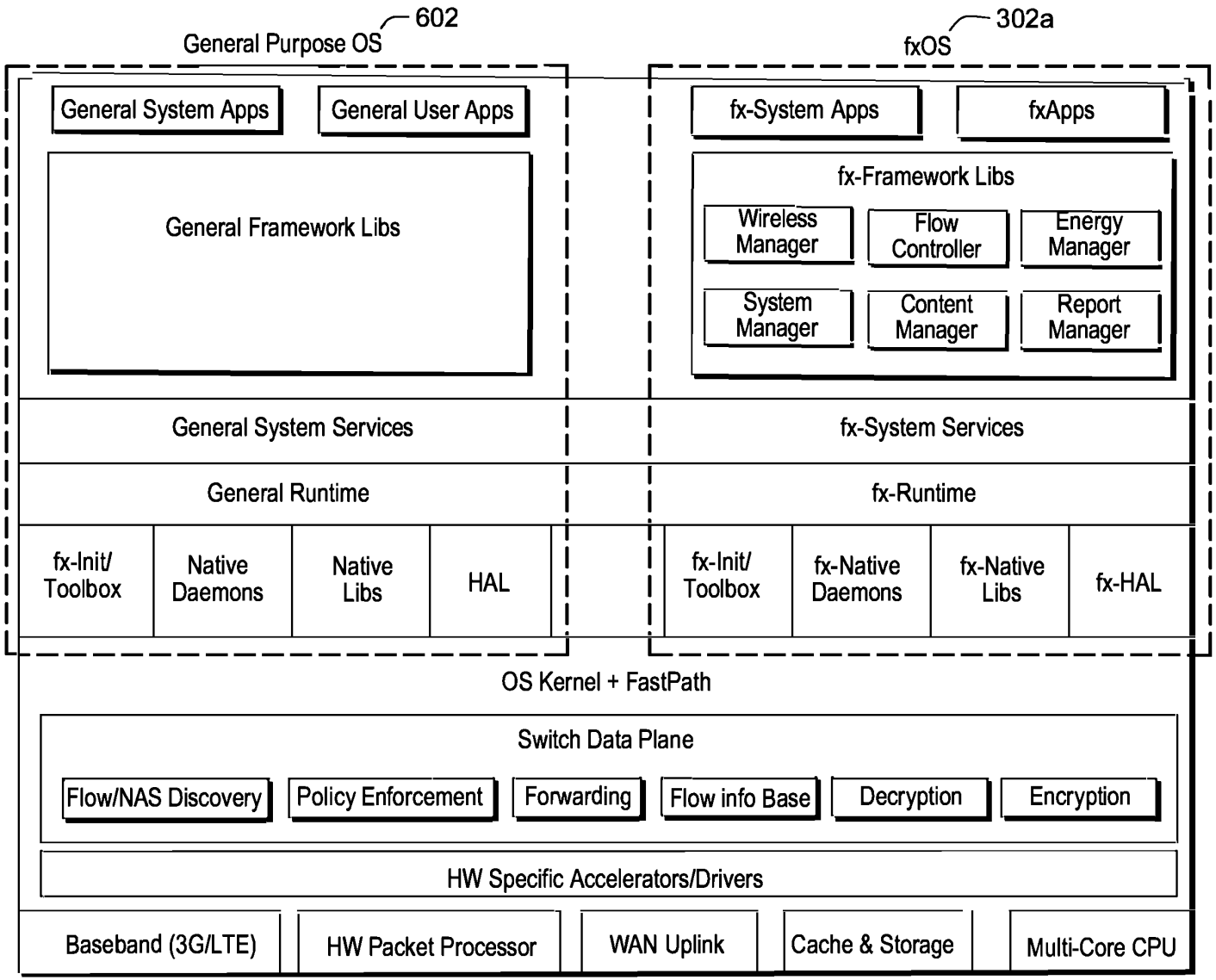
602
General Purpose OS
302a
fxOS
General System Apps
General User Apps
General Framework Libs
fx-System Apps
fxApps
fx-Framework Libs
Wireless Manager
Flow Controller
Energy Manager
System Manager
Content Manager
Report Manager
General System Services
fx-System Services
General Runtime
fx-Runtime
fx-Init/ Toolbox
Native Daemons
Native Libs
HAL
fx-Init/ Toolbox
fx-Native Daemons
fx-Native Libs
fx-HAL
OS Kernel + FastPath
Switch Data Plane
Flow/NAS Discovery
Policy Enforcement
Forwarding
Flow info Base
Decryption
Encryption
HW Specific Accelerators/Drivers
Baseband (3G/LTE)
HW Packet Processor
WAN Uplink
Cache & Storage
Multi-Core CPU

FIG. 6

Exhibit 1002
Microsoft Corporation v. Edge Networking Systems, LLC
098

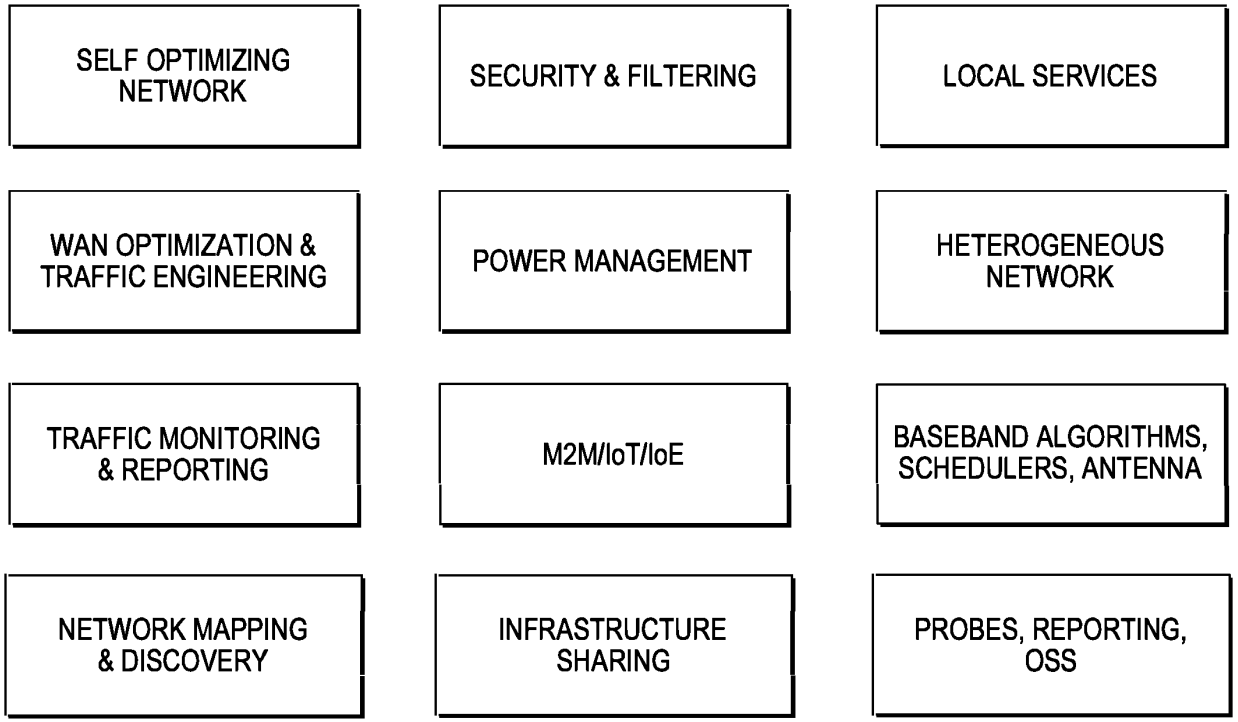

FIG. 7

Exhibit 1002
Microsoft Corporation v. Edge Networking Systems, LLC
099

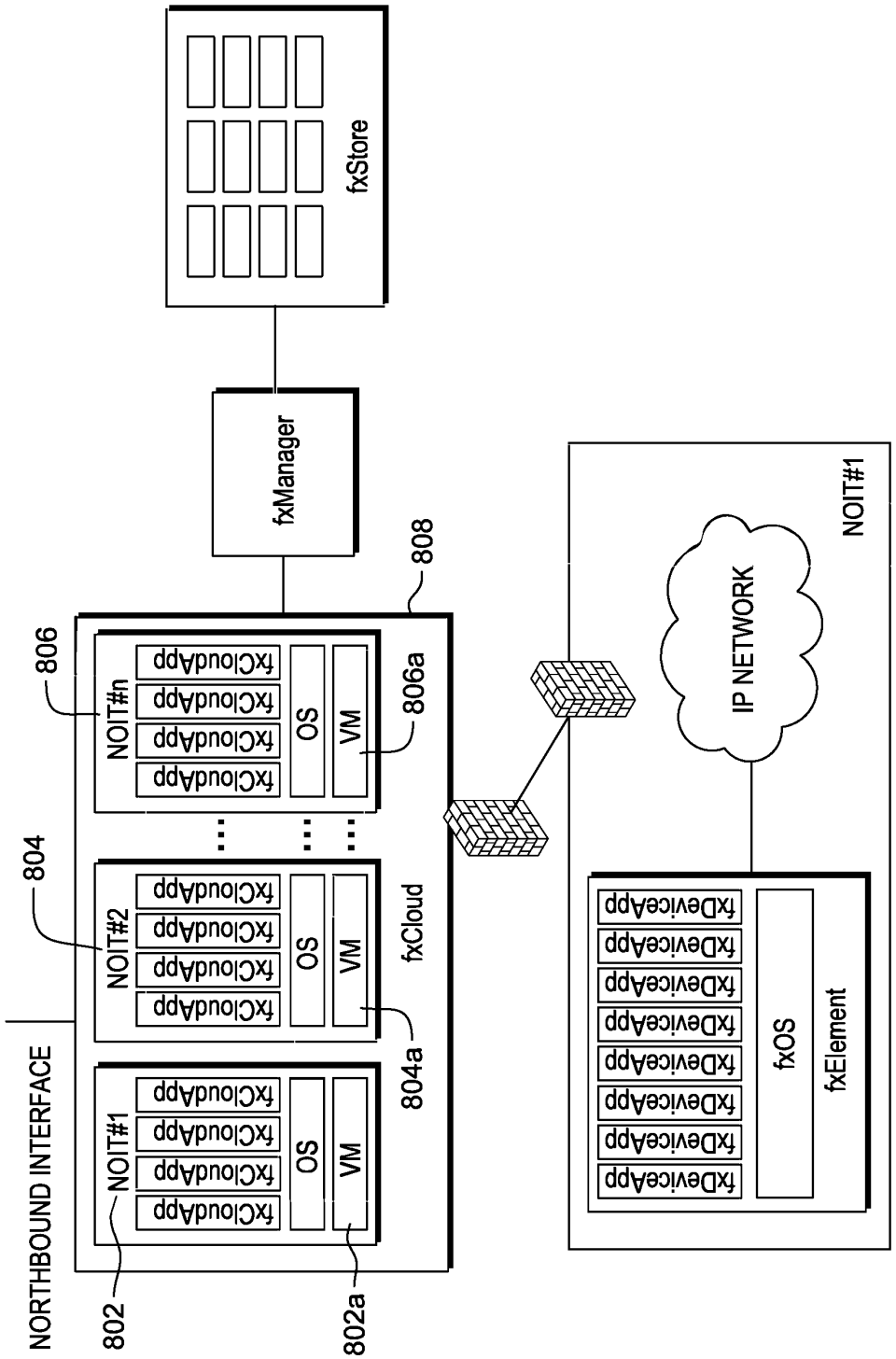

FIG. 8

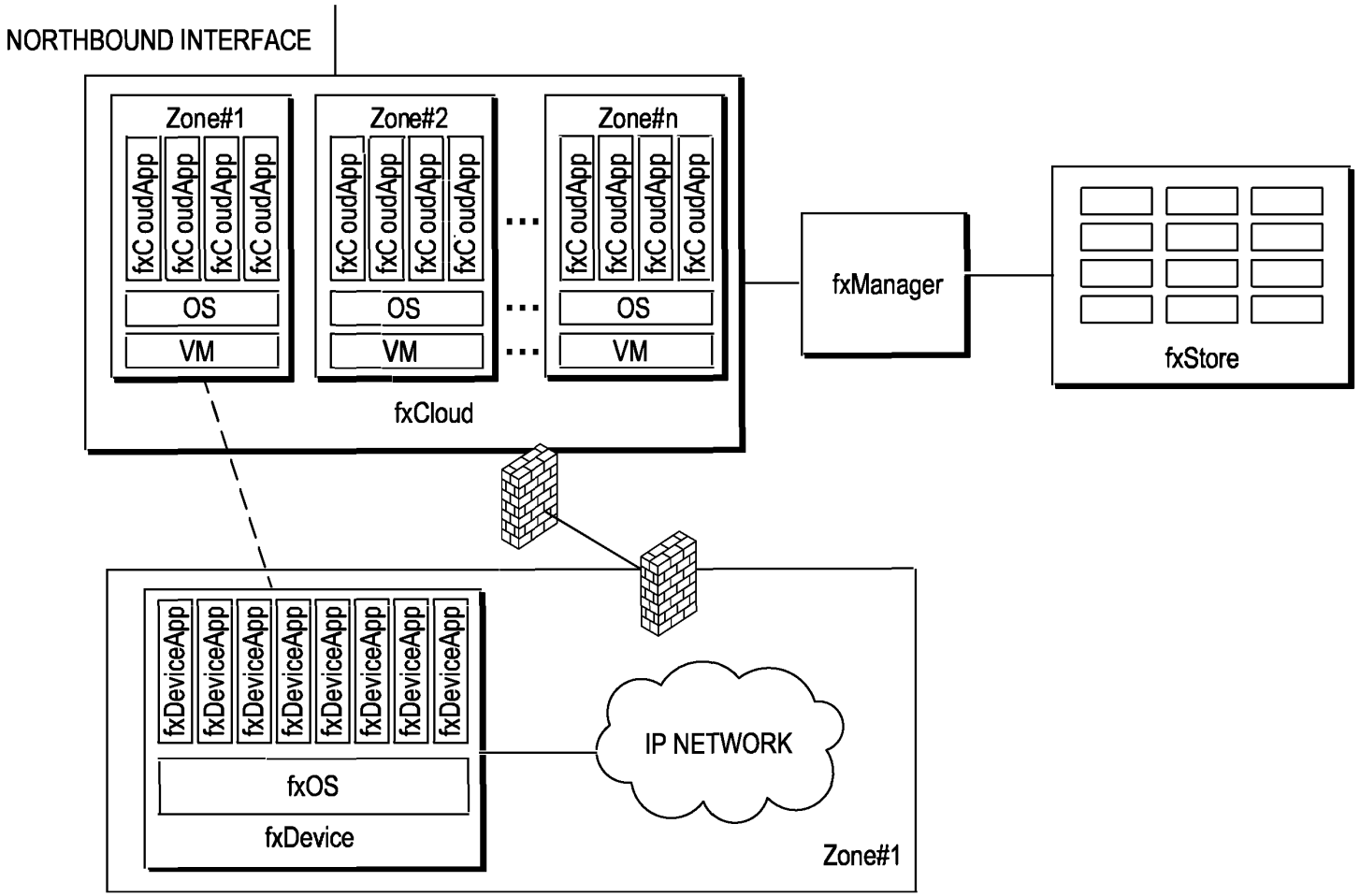
NORTHBOUND INTERFACE
Zone#1
fxC oudApp
fxC oudApp
fxC oudApp
fxC oudApp
OS
VM
Zone#2
fxC oudApp
fxC oudApp
fxC oudApp
fxC oudApp
OS
VM
Zone#n
fxC oudApp
fxC oudApp
fxC oudApp
fxC oudApp
OS
VM
fxCloud
fxManager
fxStore
fxDeviceApp
fxDeviceApp
fxDeviceApp
fxDeviceApp
fxDeviceApp
fxDeviceApp
fxDeviceApp
fxDeviceApp
fxOS
fxDevice
IP NETWORK
Zone#1

FIG. 9

Exhibit 1002
Microsoft Corporation v. Edge Networking Systems, LLC
101

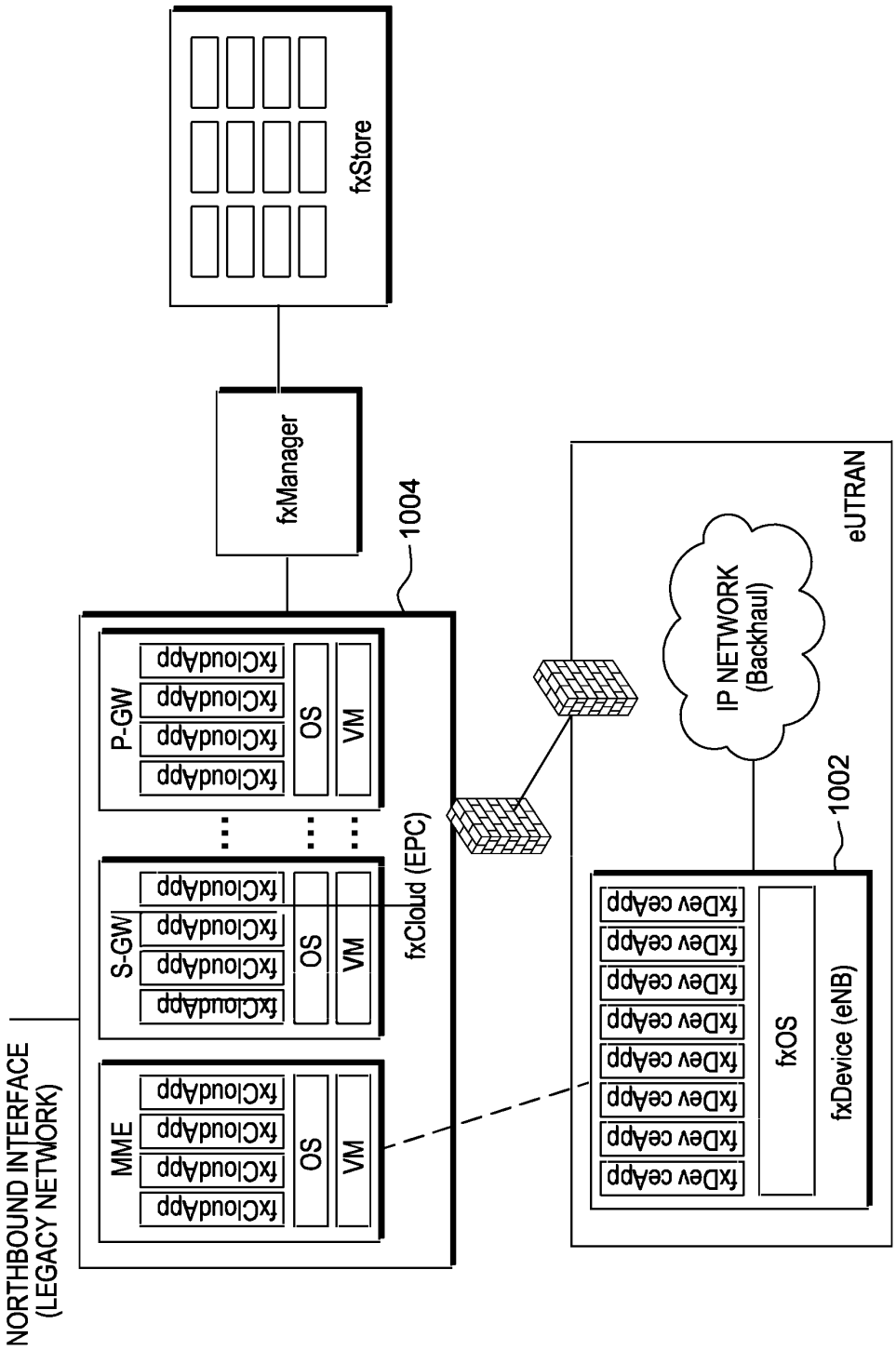

FIG. 10

Exhibit 1002
Microsoft Corporation v. Edge Networking Systems, LLC
102

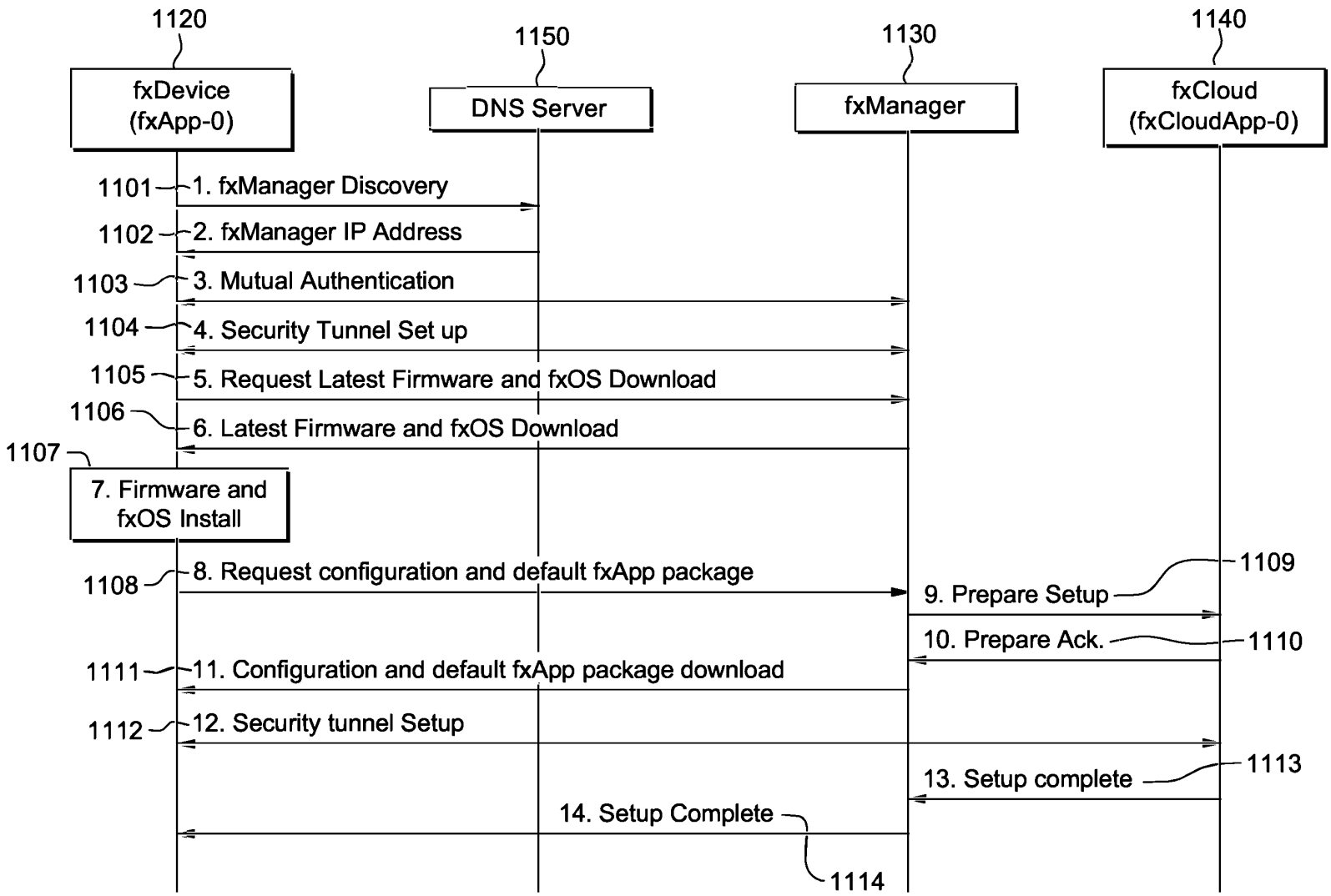

FIG. 11

Exhibit 1002
Microsoft Corporation v. Edge Networking Systems, LLC
103

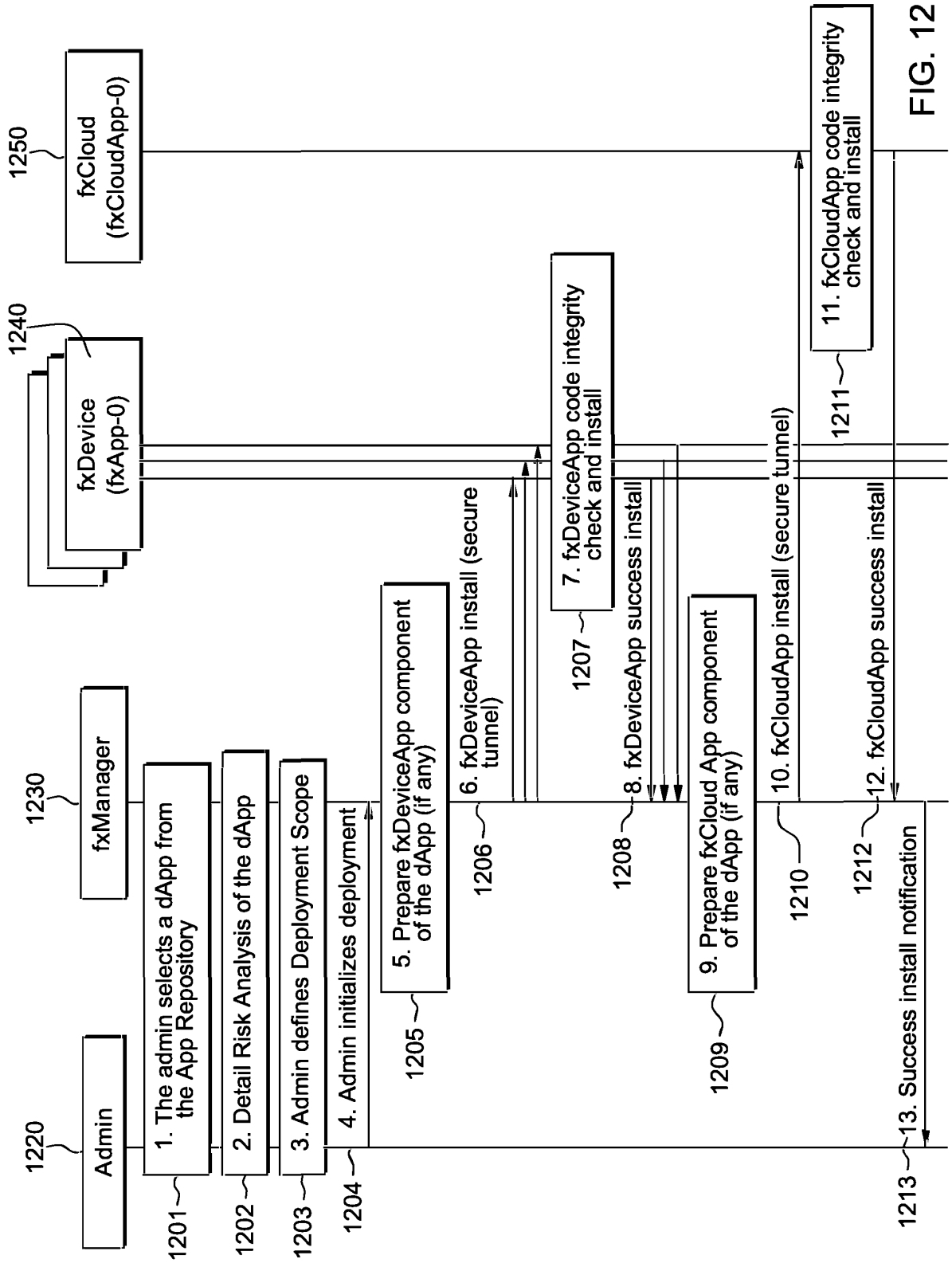

FIG. 12

Exhibit 1002
Microsoft Corporation v. Edge Networking Systems, LLC
104

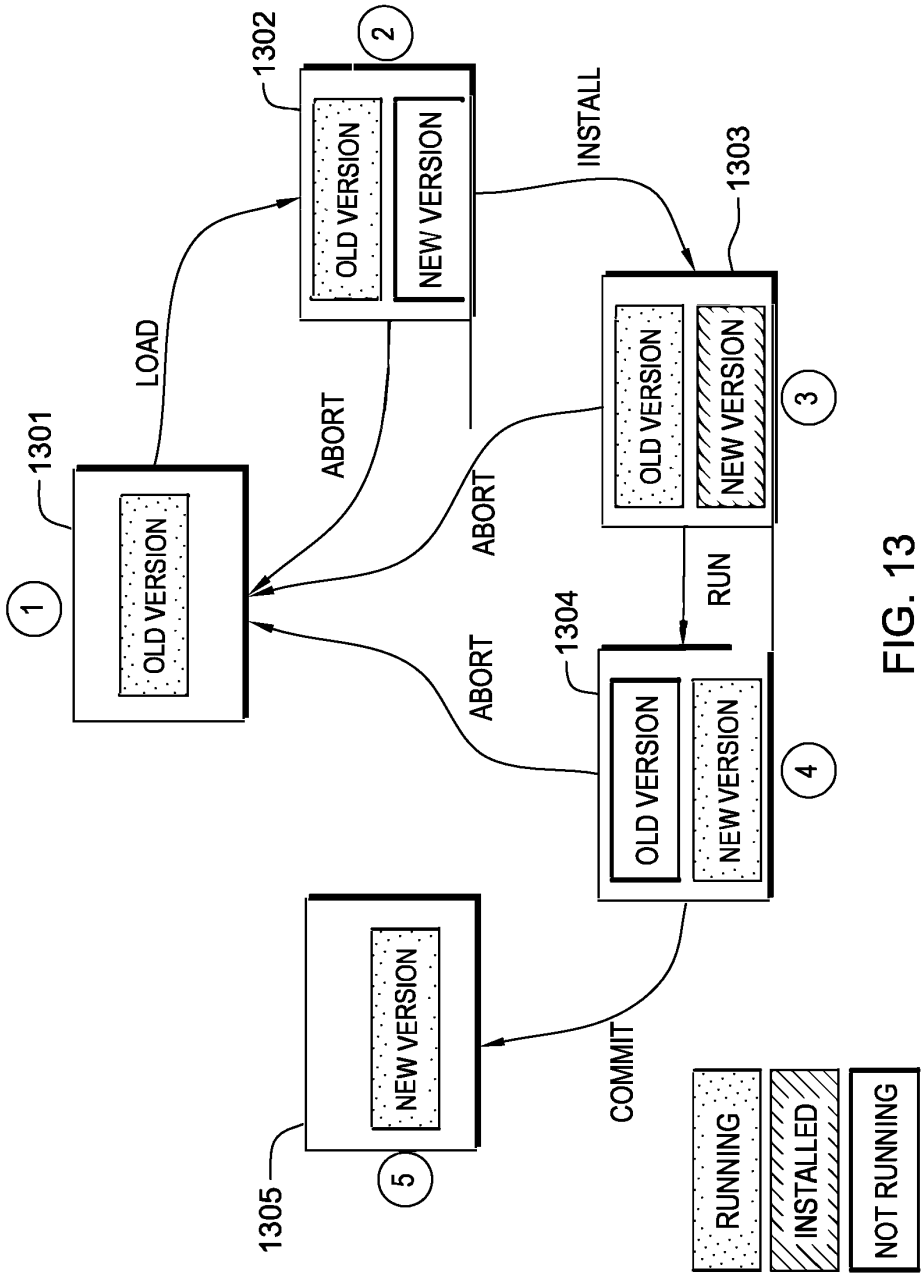

FIG. 13

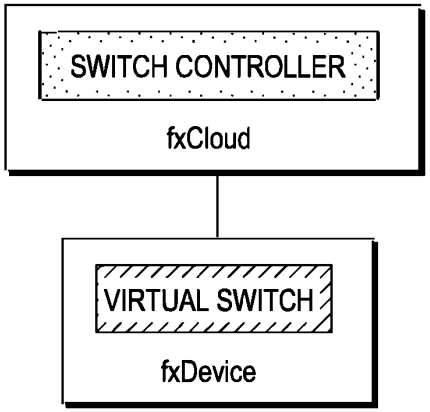

FIG. 14A

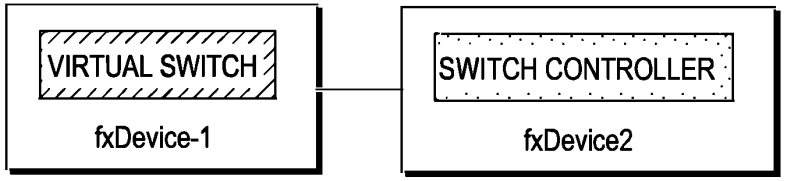

FIG. 14B

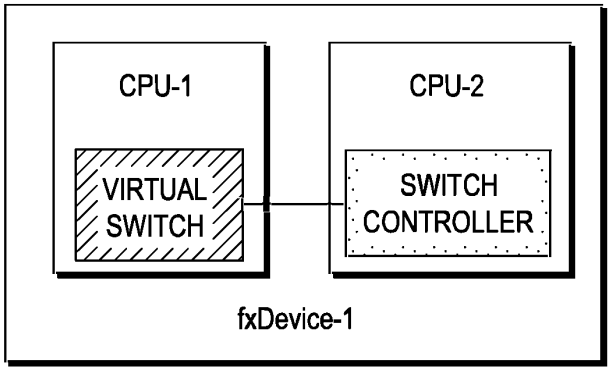

FIG. 14C

Exhibit 1002
Microsoft Corporation v. Edge Networking Systems, LLC
106

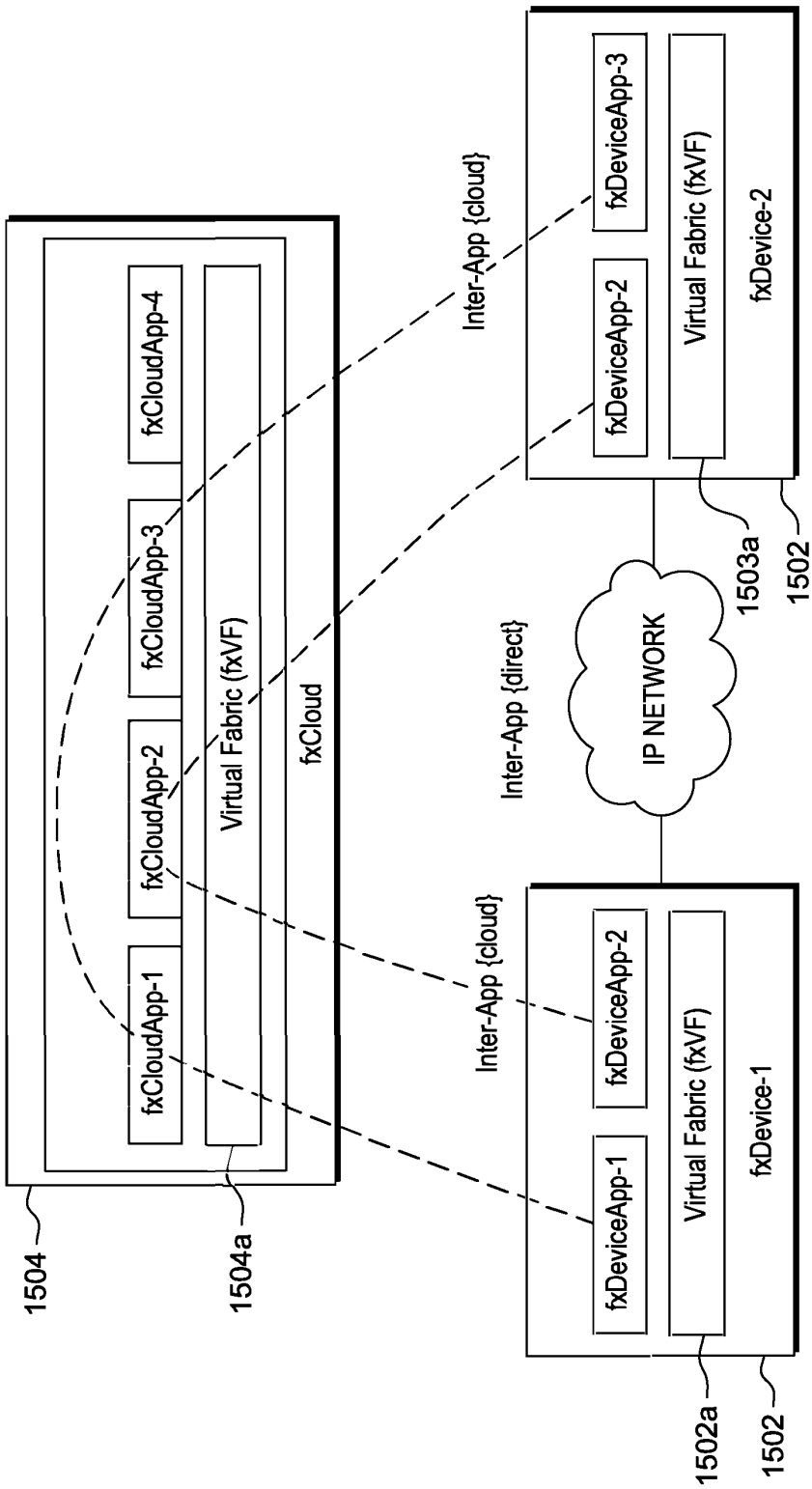

FIG. 15

Exhibit 1002
Microsoft Corporation v. Edge Networking Systems, LLC
107

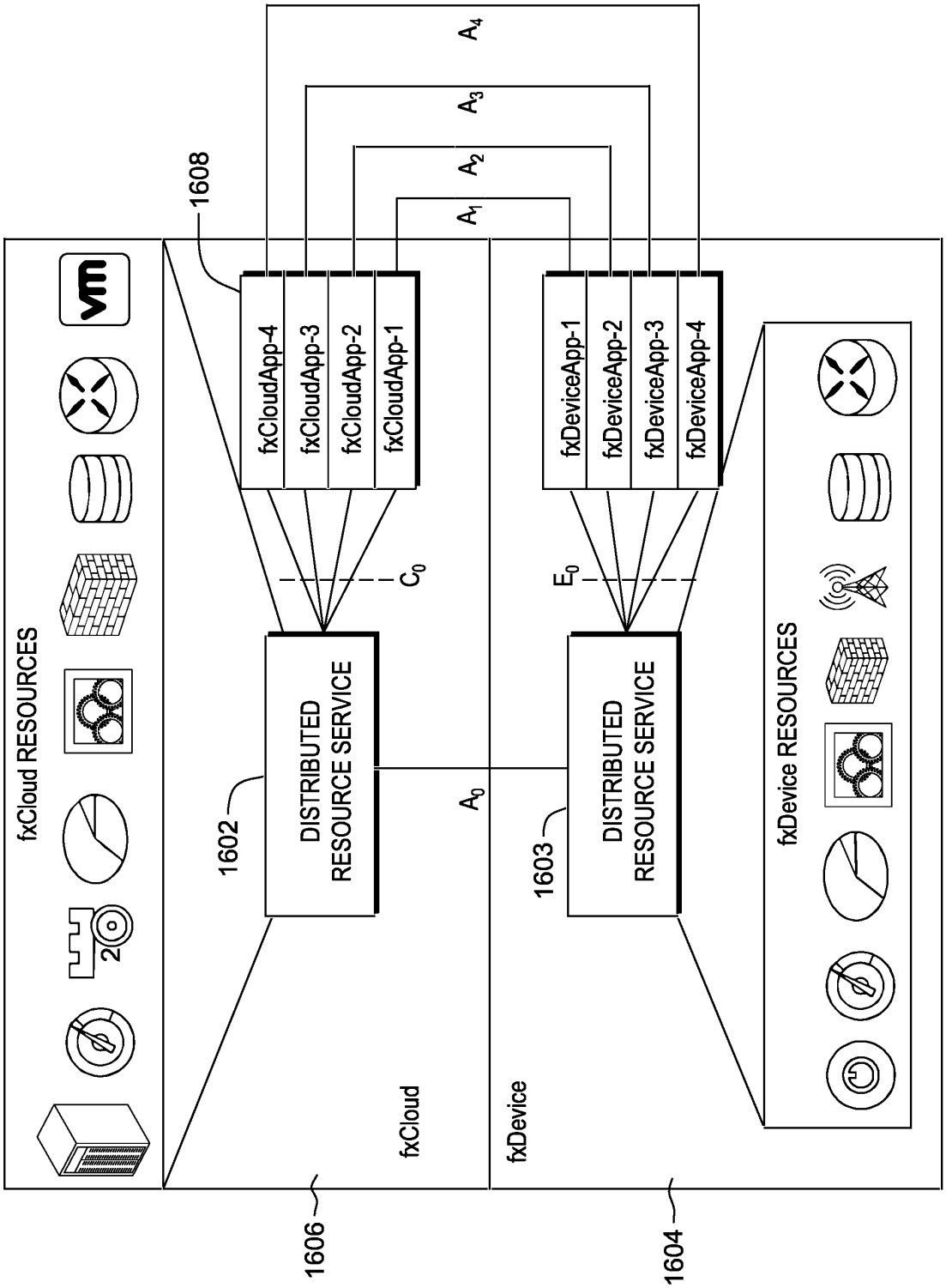

FIG. 16

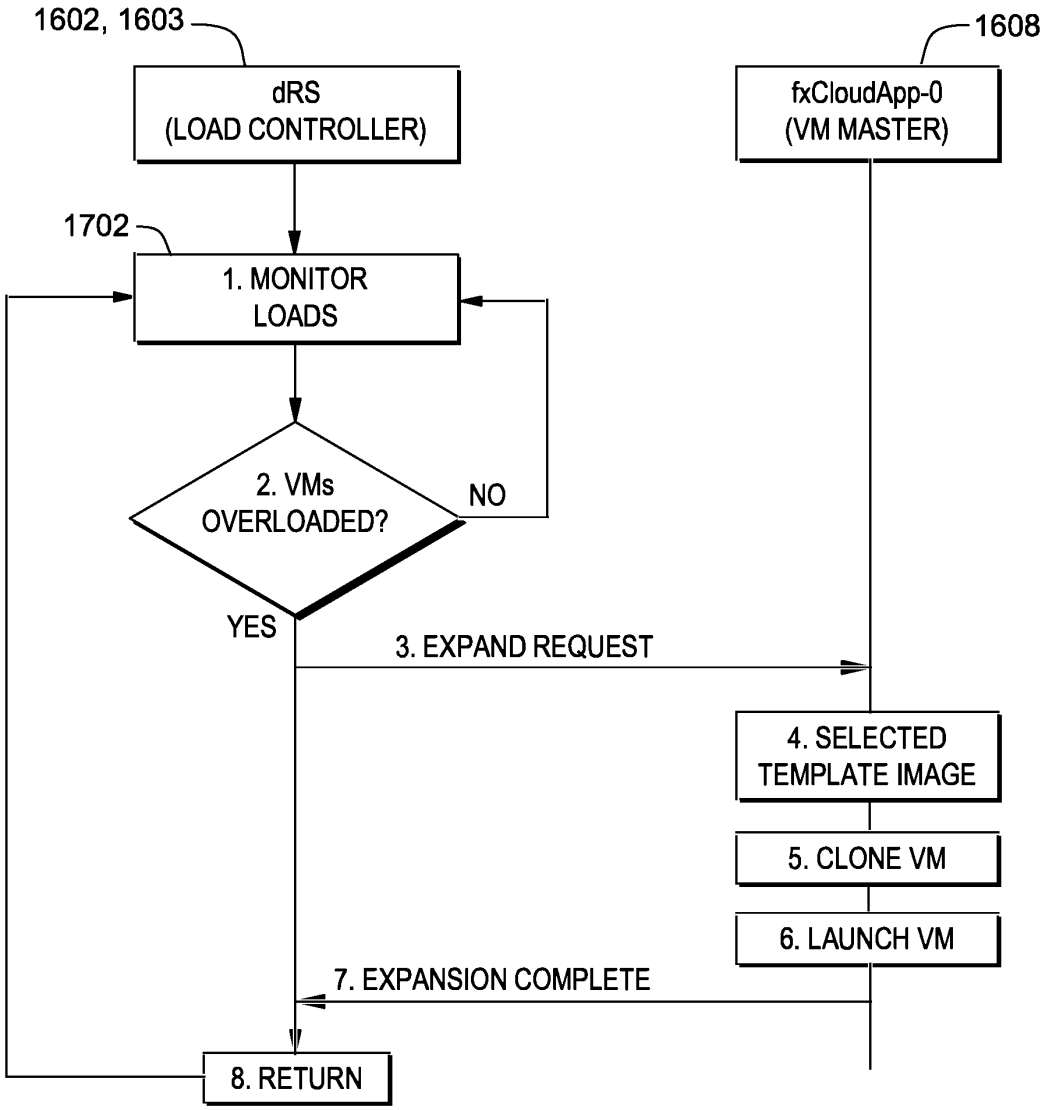
1602, 1603
dRS
(LOAD CONTROLLER)
1608
fxCloudApp-0
(VM MASTER)
1702
1. MONITOR
LOADS
2. VMs
OVERLOADED?
NO
YES
3. EXPAND REQUEST
4. SELECTED
TEMPLATE IMAGE
5. CLONE VM
6. LAUNCH VM
7. EXPANSION COMPLETE
8. RETURN

FIG. 17A

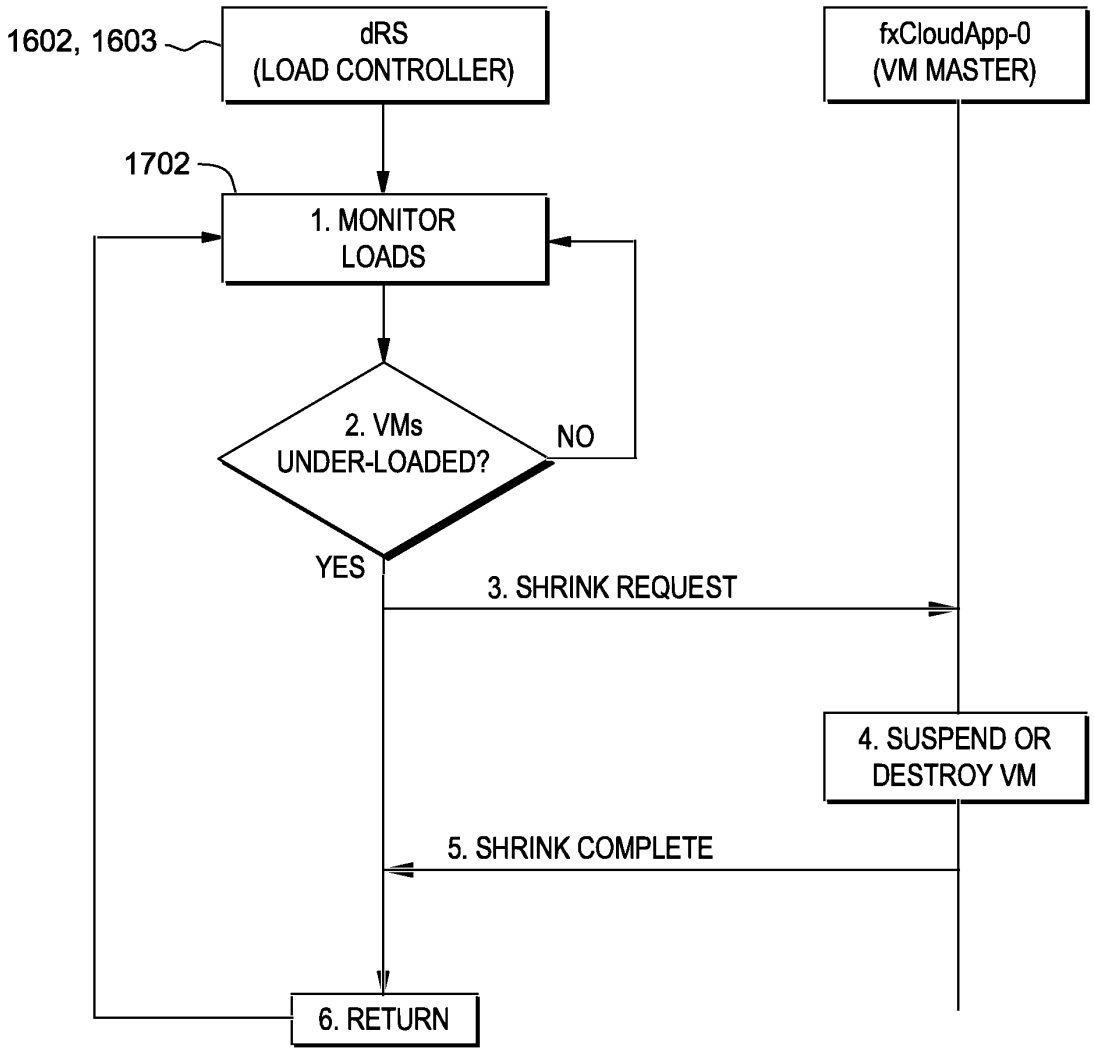
1602, 1603
dRS
(LOAD CONTROLLER)
fxCloudApp-0
(VM MASTER)
1702
1. MONITOR
LOADS
2. VMs
UNDER-LOADED?
NO
YES
3. SHRINK REQUEST
4. SUSPEND OR
DESTROY VM
5. SHRINK COMPLETE
6. RETURN

FIG. 17B

PTO/SB/35 (07-09)
Approved for use through 07/31/2012. OMB 0651-0031
U.S. Patent and Trademark Office; U. S. DEPARTMENT OF COMMERCE
Under the Paperwork Reduction Act of 1995, no persons are required to respond to a collection of information unless it displays a valid OMB control number.

NONPUBLICATION REQUEST UNDER 35 U.S.C. 122(b)(2)(B)(i)

First Named Inventor	TAAGHOL
Title	DISTRIBUTED SOFTWARE DEFINED NETWOF
Attorney Docket Number	TAAG001CONT2

I hereby certify that the invention disclosed in the attached application **has not and will not be** the subject of an application filed in another country, or under a multilateral international agreement, that requires publication at eighteen months after filing.

I hereby request that the attached application not be published under 35 U.S.C. 122(b).

/Christopher J. Horgan/ — June 14, 2020

Signature — Date

Christopher J. Horgan — 40,394

Typed or printed name — Registration Number, if applicable

408-687-8306

Telephone Number

This request must be signed in compliance with 37 CFR 1.33(b) and submitted with the application **upon filing.**

Applicant may rescind this nonpublication request at any time. If applicant rescinds a request that an application not be published under 35 U.S.C. 122(b), the application will be scheduled for publication at eighteen months from the earliest claimed filing date for which a benefit is claimed.

If applicant subsequently files an application directed to the invention disclosed in the attached application in another country, or under a multilateral international agreement, that requires publication of applications eighteen months after filing, the applicant **must** notify the United States Patent and Trademark Office of such filing within forty-five (45) days after the date of the filing of such foreign or international application. **Failure to do so will result in abandonment of this application (35 U.S.C. 122(b)(2)(B)(iii)).**

This collection of information is required by 37 CFR 1.213(a). The information is required to obtain or retain a benefit by the public which is to file (and by the USPTO to process) an application. Confidentiality is governed by 35 U.S.C. 122 and 37 CFR 1.11 and 1.14. This collection is estimated to take 6 minutes to complete, including gathering, preparing, and submitting the completed application form to the USPTO. Time will vary depending upon the individual case. Any comments on the amount of time you require to complete this form and/or suggestions for reducing this burden, should be sent to the Chief Information Officer, U.S. Patent and Trademark Office, U.S. Department of Commerce, P.O. Box 1450, Alexandria, VA 22313-1450. DO NOT SEND FEES OR COMPLETED FORMS TO THIS ADDRESS. **SEND TO: Commissioner for Patents, P.O. Box 1450, Alexandria, VA 22313-1450.**

If you need assistance in completing the form, call 1-800-PTO-9199 (1-800-786-9199) and select option 2.

Electronic Patent Application Fee Transmittal

Application Number:	
Filing Date:	
Title of Invention:	Distributed Software Defined Networking
First Named Inventor/Applicant Name:	Pouya Taaghol
Filer:	Christopher James Horgan
Attorney Docket Number:	TAAG001CONT2

Filed as Small Entity

Filing Fees for Utility under 35 USC 111(a)

Description	Fee Code	Quantity	Amount	Sub-Total in USD($)
Basic Filing:				
UTILITY FILING FEE (ELECTRONIC FILING)	4011	1	75	75
UTILITY SEARCH FEE	2111	1	330	330
UTILITY EXAMINATION FEE	2311	1	380	380
Pages:				
Claims:				
Miscellaneous-Filing:				
Petition:				
Patent-Appeals-and-Interference:				

Description	Fee Code	Quantity	Amount	Sub-Total in USD($)
Post-Allowance-and-Post-Issuance:				
Extension-of-Time:				
Miscellaneous:				
		Total in USD ($)		**785**

Electronic Acknowledgement Receipt	
EFS ID:	39712555
Application Number:	16900963
International Application Number:	
Confirmation Number:	2579
Title of Invention:	Distributed Software Defined Networking
First Named Inventor/Applicant Name:	Pouya Taaghol
Customer Number:	112449
Filer:	Christopher James Horgan
Filer Authorized By:	
Attorney Docket Number:	TAAG001CONT2
Receipt Date:	14-JUN-2020
Filing Date:	
Time Stamp:	19:11:35
Application Type:	Utility under 35 USC 111(a)

Payment information:

Submitted with Payment	yes
Payment Type	CARD
Payment was successfully received in RAM	$785
RAM confirmation Number	E20206DJ14271068
Deposit Account	
Authorized User	
The Director of the USPTO is hereby authorized to charge indicated fees and credit any overpayment as follows:	

File Listing:

Document Number	Document Description	File Name	File Size(Bytes)/ Message Digest	Multi Part /.zip	Pages (if appl.)
1	Oath or Declaration filed	TAAG002CONT2_DECS.pdf	328850 9147779895ace17d91177fedad0361f1f9822316	no	2
Warnings:					
Information:					
2	Application Data Sheet	TAAG002CONT2_ADS.pdf	1483421 0c3dcc965bac0b6717f217301528642de47b7660	no	5
Warnings:					
Information:					
This is not an USPTO supplied ADS fillable form					
3	Drawings-only black and white line drawings	TAAG001CONT2_DRAWINGS___.pdf	988700 27ef8e1b52d6ed16b003ede33883adc3f491ff39	no	18
Warnings:					
Information:					
4	Specification	TAAG001CONT2_SPECIFICATION___.pdf	5255229 a902ec4b20e782a33676a5645310df11efd1d63e	no	61
Warnings:					
Information:					
5	Nonpublication request from applicant	TAAG002CONT2_NONPUB___.pdf	66393 44ef04b656b987468b2592126bdc993bf94dcdf5	no	1
Warnings:					
Information:					
6	Fee Worksheet (SB06)	fee-info.pdf	35205 0f1607bd1b366634e99996cc68a1e42fec6b46b2	no	2
Warnings:					

Information:	
Total Files Size (in bytes):	8157798

This Acknowledgement Receipt evidences receipt on the noted date by the USPTO of the indicated documents, characterized by the applicant, and including page counts, where applicable. It serves as evidence of receipt similar to a Post Card, as described in MPEP 503.

New Applications Under 35 U.S.C. 111
If a new application is being filed and the application includes the necessary components for a filing date (see 37 CFR 1.53(b)-(d) and MPEP 506), a Filing Receipt (37 CFR 1.54) will be issued in due course and the date shown on this Acknowledgement Receipt will establish the filing date of the application.
National Stage of an International Application under 35 U.S.C. 371
If a timely submission to enter the national stage of an international application is compliant with the conditions of 35 U.S.C. 371 and other applicable requirements a Form PCT/DO/EO/903 indicating acceptance of the application as a national stage submission under 35 U.S.C. 371 will be issued in addition to the Filing Receipt, in due course.
New International Application Filed with the USPTO as a Receiving Office
If a new international application is being filed and the international application includes the necessary components for an international filing date (see PCT Article 11 and MPEP 1810), a Notification of the International Application Number and of the International Filing Date (Form PCT/RO/105) will be issued in due course, subject to prescriptions concerning national security, and the date shown on this Acknowledgement Receipt will establish the international filing date of the application.

DISTRIBUTED SOFTWARE DEFINED NETWORKING

CROSS-REFERENCE TO RELATED PATENT APPLICATIONS

[0001] The present invention claims priority from U.S. Patent Application No. 15/836,824, filed on 12/9/2017; which claims priority from U.S. Patent Application Ser. No. 14/295,331, filed June 4, 2014; which claims priority from U.S. Provisional Patent Application Serial No. 61/834,807, filed June 13, 2013; both of these disclosures are herein specifically incorporated by reference in their entirety.

FIELD OF THE INVENTION

[0002] This invention relates to a network architecture that facilitates secure and flexible programmability between a user device and across a network with full lifecycle management of services and infrastructure applications.

BACKGROUND

[0003] Existing network solutions are built on proprietary hardware and software. Network Operators & Information Technology (NOIT) can only configure the proprietary network infrastructure provided by vendors and are unable to add new and customized features or capabilities. As a result, the NOIT can only add new desired features by making such requests to their infrastructure vendors or pursuing standardization processes. But these existing approaches are time consuming and resourceintensive.

SUMMARY OF THE INVENTION

[0004] An aspect of the disclosure herein is a plurality of network elements in a packet system, said network elements comprising: a flexible network device adapted to process data flows in the packet system having at least one fxDeviceApp; a flexible cloud platform having at least one fxCloudApp, wherein the at least one fxDeviceApp and at least one fxCloudApp are in secure communication to form a distributed application; and an application management portal which manages life cycle of the distributed applications.

Exhibit 1002
Microsoft Corporation v. Edge Networking Systems, LLC
116

[0005] Another aspect of the disclosure is a plurality of network elements in a packet system, said network elements comprising: a flexible cloud platform having a plurality of virtual machines, wherein each of the virtual machines has at least one fxCloudApp; and a flexible network device adapted to process data flows in the packet system having at least one fxDeviceApp, wherein the at least one fxDeviceApp and fxCloudApp are in secure communication to form a distributed application.

[0006] Another aspect of the disclosure is a plurality of network elements in a packet system, said network elements comprising: a flexible cloud platform having a plurality of zones, wherein each of the plurality of zones has at least one fxCloudApp; and a flexible network device adapted to process data flows in the packet system having at least one fxDeviceApp, wherein the at least one fxDeviceApp and fxCloudApp are in secure communication to form a distributed application.

BRIEF DESCRIPTION OF THE DRAWINGS

[0007] Figure 1 demonstrates the network architecture of a 4G system.

[0008] Figure 2 illustrates a network element (or system) upon which the Distributed Software Defined Network operates.

[0009] Figure 3 illustrates a Distributed Software Defined Network in accordance with the present disclosure.

[0010] Figure 4 is an exemplary view of the software layers in the Flexible Operation System (fxOS) Architecture.

[0011] Figure 5 illustrates the FastPath architecture.

[0012] Figure 6 presents a potential software layer of the fxOS co-existing alongside a general purpose OS.

[0013] Figure 7 is an exemplary view of the fxStore Portal.

[0014] Figure 8 demonstrates a shared fxCloud deployment.

[0015] Figure 9 demonstrates a Zoned Deployment.

[0016] Figure 10 demonstrates another deployment option as applied to cellular networks (especially Long Term Evolution (LTE)).

[0017] Figure 11 shows an example of a signaling flow chart for the fxDevice Commissioning Procedure.

[0018] Figure 12 shows an example procedure for Application Provisioning.

[0019] Figure 13 presents the state machine for the application upgrade process.

[0020] Figures 14A-14C are examples of the Distributed Switch Controller during Upgrade.

[0021] Figure 15 shows how fxVF in the fxCloud and fxDevice.

[0022] Figure 16 demonstrates the logical interfaces between the platform resources and applications.

[0023] Figures 17A and 17B demonstrate example procedures for cloud breathing procedures.

DETAILED DESCRIPTION

[0024] The Distributed Software Defined Network (dSDN) disclosed herein is an architecture that enables secure and flexible programmability across a network with full lifecycle management of services and infrastructure applications (fxDeviceApp). The dSDN also harmonizes application deployment across the network independent of the hardware vendor. As a result, the dSDN simplifies the network deployment lifecycle from concept to design to implementation to decommissioning.

DEFINITIONS, ACRONYMS & ABBREVIATIONS

[0025] The following terms, acronyms, abbreviations and descriptions are explained below and are used throughout the detailed description of the dSDN:

TERM	DESCRIPTION
2G	2nd Generation Cellular Technology
3G	3Rd Generation Cellular Technology
4G	4th Generation Cellular Technology
AP	WiFi Access Point
API	Application Programming Interface

Exhibit 1002
Microsoft Corporation v. Edge Networking Systems, LLC
118

AR	Application Repository
ASIC	Application Specification Integrated Circuit
AuC	Authentication Center
BS	Base Station
BSC	Base Station Controller
BTS	Base Station
CDN	Content Distribution Network
CN	Core Network
CNIE	Core Network Internet Edge
CPU	Central Processing Unit
dAP	Distributed Application Package
dApp	Distributed App
dCP	Distributed Content Service
dNS	Distributed Notification Service
DNS	Domain Name System
DPDK	Data Plane Development Kit
DPI	Deep Packet Inspection
dRS	Distributed Resource Service
DSCP	Differentiated Service Code Point (QoS)
E-UTRAN	Evolved UMTS Terrestrial Radio Access Network
EIR	Equipment Identity Register
eNB	Enhanced Node B (4G)
FIB	Flow Information Base
FQDN	Fully Qualified Domain Name
fxApp	FleXible Application, which has a fxDeviceApp and fxCloudApp component. fxDeviceApp and fxCloudApp of one application represent fxApp.
fxDeviceApp	FleXible Application which runs on fxDevice
fxBS	FleXible Base Station that is a BS that is powered by fxOS (an example of an fxDevice)

fxCloud	FleXible Cloud that interacts with fxDevice and on other network elements on the northbound Interface
fxCloudApp	FleXible Cloud Application that is the application that runs on fxCloud and can be associated to one or more fxDeviceApp in fxDevice
fxManager	FleXible Manager that manager the fxOS lifecycle (provisioning, usage, de-provisioning)
fxOS	FleXible Operation System which run on the fxDevice as the OS and firmware
fxSDK:	FleXible Software Development Kit
fxSimulator	FleXible Simulator
fxStore	FleXible Store that presents fxApp to the network
administratorsGERAN	GPRS Edge Radio Access Network
GGSN	Gateway GPRS Support Node (used in core network of 2G/3G systems)uhu
GMSC	Gateway Mobile Switching Center
GPRS	General Packet Radio Service
GPS	Global Positioning System
GTP	GPRS Tunneling Protocol
GW	Gateway
HAL	Hardware Abstraction Layer
HD	High Definition
HLR	Home Location Register
HSS	Home Subscriber Server
IAC	Inter Application Communication

IMS	IP Multimedia Sub-system
IMSI	International Mobile Subscriber Identifier
IMSI	International Mobile Subscriber Identity
IP	Internet Protocol
JVM	Java Virtual Machine
LA	Location Area
LAN	Local Area Network
LSP	Label Switching Protocol
M2M	Machine to Machine
MAC	Medium Access Control
MCP	Multi Chip Packaging
MIMO	Multi Input Multi Output
MME	Mobility Management Entity (used in core network of LTE)
MNO	Mobile Operator Network
MPLS	Multi Protocol Label Switching
MSC	Mobile Switching Center
MSISDN	Mobile Station
NAS	Non-Access Stratum
NB	Node B (3G)
NFC	Near Field Communication
NFV	Network Function Virtualization
NOIT	Network Operations & Information Technology; this term network broadly includes carriers, service providers, enterprise networks, and designated/contacted 3rd party administrators.

OS	Operating System
OTT	Over the Top
P-GW	Packet Gateway
PaaS	Platform-as-a-Service
PBX	Private Branch exchange (telephony)
PDG	Packet Data Gateway
PDN	Packet Data Network
PHY	Physical Layer
PLMN	Public Land Mobile Network
PnP	Plug and Play
PP	Packet Processor
PR	Platform Resources
PSTN	Public Switched Telephone Network
QoS	Quality of Service
RA	Routing Area
RAN	Radio Access Network of cellular networks
RAPI	Resources API
RFID	Radio Frequency Identifier
RNC	Radio Network Controller
S-GW	Serving Gateway
S1-AP	S1 Interface Application Protocol (an LTE protocol between MME and eNodeB)
SaaS	Software-as-a-Software
SDK	Software Development Kit
SDN	Software Defined Network
SGSN	Serving GPRS Support Node (used in core

	network of 2G/3G systems)
SIM	Subscriber Identity Module
SiP	System in a Package
SMS	Short Message Service
SoC	System on a Chip
SON	Self-Optimizing Network
SSDP	Simple Service Discovery Protocol
TA	Target Area
TNE	Test Network Environment
TTM	Time to Market
UMTS	Universal Mobile Telecommunication System
UPnP	Universal Plug and Play
URA	UMTS Routing Area
URI	Uniform Resource Identifier
UTRAN	UMTS Terrestrial Radio Access Network
VLR	Visitor Location Register
VM	Virtual Machine
VPN	Virtual Private Network
WAN	Wide Area Network
WLAN	Wireless Local Area Network
WLAN	Wireless Local Area Network
XMPP	Extensible Messaging and Presence Protocol

[0026] Database. One or more large structured sets of persistent data maintained upon a computer system organized and structured according to a software system defining rules for organization as well as responding to queries to read, write, or modify data as well as provide statistical information regarding the contained data. As used in this disclosure in describing the dSDN, a database may be either a single unified system or a distributed system wherein certain database elements are located upon different systems or servers which may be in different physical locations, acting in harmony to appear as one unified database. Where databases are described, it will be understood by one of ordinary skill in the art that (i) alternative database structures to those described may be readily employed, and (ii) other memory structures besides databases may be readily employed. Any illustrations or descriptions of any sample databases presented herein are illustrative arrangements for stored representations of information. The database formats may include relational databases, object-based models and/or distributed databases which could be used to store and manipulate the data types described herein. Likewise, object methods or behaviors of a database can be used to implement various processes, such as the described herein. In addition, the databases may, in a known manner, be stored locally or remotely from a device which accesses data in such a database.

[0027] The term "determining" and grammatical variants thereof (e.g., to determine a price, determining a value, determine an object which meets a certain criterion) is used in an extremely broad sense. The term "determining" encompasses a wide variety of actions and therefore "determining" can include calculating, computing, processing, deriving, investigating, looking up (e.g., looking up in a table, a database or another data structure), ascertaining and the like. Also, "determining" can include receiving (e.g., receiving information), accessing (e.g., accessing data in a memory) and the like. Also, "determining" can include resolving, selecting, choosing, establishing, and the like. The term "determining" does not imply certainty or absolute precision, and therefore "determining" can include estimating, extrapolating, predicting, guessing and the like. The term "determining" does not imply that mathematical processing must be performed, and does not imply that numerical methods must be used, and does not imply that an algorithm or process is used.

[0028] The functionality and/or the features of a single device that is described may be alternatively embodied by one or more other devices which are described but are not explicitly described as having such functionality/features. Thus, other embodiments need not include the described device itself, but rather can include the one or more other devices which would, in those other embodiments, have such functionality/features.

[0029] Devices that are described as in "communication" with each other or "coupled" to each other need not be in continuous communication with each other or in direct physical contact, unless expressly specified otherwise. On the contrary, such devices need only transmit to each other as necessary or desirable, and may actually refrain from exchanging data most of the time. For example, a machine in communication with or coupled with another machine via the Internet may not transmit data to the other machine for long period of time (e.g. weeks at a time). In addition, devices that are in communication with or coupled with each other may communicate directly or indirectly through one or more intermediaries.

[0030] Although process (or method) steps may be described or claimed in a particular sequential order, such processes may be configured to work in different orders. Further, some steps may be performed simultaneously despite being described or implied as occurring non-simultaneously (e.g., because one step is described after the other step) unless specifically indicated. Moreover, the illustration of a process by its depiction in a drawing does not imply that the illustrated process is exclusive of other variations and modifications thereto, does not imply that the illustrated process or any of its steps are necessary to the embodiment(s), and does not imply that the illustrated process is preferred. Where a process is described in an embodiment the process may operate without any user intervention.

[0031] It will be readily apparent to one of ordinary skill in the art that the various processes of the dSDN described herein may be implemented by, e.g., appropriately programmed general purpose computer(s), special purpose computer(s) and computing device(s). Typically a processor (e.g., one or more microprocessors, one or more microcontrollers, one or more digital signal processors) will receive instructions (e.g., from a memory or like device), and execute those instructions,

thereby performing one or more processes defined by those instructions. Instructions may be embodied in, e.g., one or more computer programs, one or more scripts.

[0032] A "processor" means one or more microprocessors, central processing units (CPUs), computing devices, controllers, microcontrollers, digital signal processors, or like devices or any combination thereof, regardless of the architecture (e.g., chip-level multiprocessing/multi-core, Reduced Instruction Set Computer (RISC), Complex Instruction Set Computer (CISC), Microprocessor without Interlocked Pipeline Stages, pipelining configuration, or simultaneous multithreading).

[0033] Further, programs that implement methods described herein may be stored and transmitted using a variety of media (e.g., computer readable media) in a number of manners. In some embodiments, hard-wired circuitry or custom hardware may be used in place of, or in combination with, some or all of the software instructions that can implement the processes of various embodiments. Thus, various combinations of hardware and software may be used instead of software only to implement the embodiments.

[0034] The term "non-transitory computer readable medium" in this disclosure refers to any medium, a plurality of the same, or a combination of different media, that participate in providing data (e.g., instructions, data structures) which may be read by a computer, a processor or a like device. Such a medium may take many forms, including but not limited to, non-volatile media, volatile media, and transmission media. Non-volatile media may include, for example, optical or magnetic disks and other persistent memory. Volatile media may include dynamic random access memory (DRAM), which typically constitutes the main memory. Transmission media may include coaxial cables, copper wire and fiber optics, including the wires that comprise a system bus coupled to the processor. Transmission media may include or convey acoustic waves, light waves and electromagnetic emissions, such as those generated during radio frequency (RF) and infrared (IR) data communications. Common forms of non-transitory computer-readable media in which the dSDN may be implemented include, for example, a floppy disk, a flexible disk, hard disk, magnetic tape, any other magnetic medium, a CD-ROM, DVD, any other optical medium, punch cards, paper

tape, any other physical medium with patterns of holes, a Random Access Memory (RAM), a programmable read only memory (PROM), an erasable programmable read only memory (EPROM), a flash electrically erasable programmable read only memory (FLASH-EEPROM), any other memory chip or cartridge, a carrier wave as described hereinafter, or any other medium from which a computer can read.

[0035] Various forms of computer readable media in this disclosure may be involved in carrying data (e.g. sequences of instructions) to a processor. For example, data may be (i) delivered from RAM to a processor; (ii) carried over a wireless transmission medium; (iii) formatted and/or transmitted according to numerous formats, standards or protocols, such as Ethernet (or IEEE 802.3), Bluetooth, and Transmission Control Protocol/Internet Protocol ("TCP/IP"), Time Division Multiple Access (TDMA), Code Division Multiple Access (CDMA), and 2G/3G; and/or (iv) encrypted to ensure privacy or prevent fraud in any of a variety of ways well known in the art.

[0036] Thus in some embodiments in this disclosure a description of a process may be a description of a non-transitory computer-readable medium storing a program for performing the process. The computer readable medium may store (in any appropriate format) those program elements which are appropriate to perform the method.

[0037] In an embodiment, a server computer, network element or centralized authority may not be necessary or desirable. For example, an embodiment may be practiced on one or more devices without a central authority. In such an embodiment, any functions described herein as performed by the server computer or data described as stored on the server computer may instead be performed by or stored on one or more such devices.

[0038] In interpreting the present application (which includes the claims), one of ordinary skill in the art shall refer to the prosecution history of the present application, but not to the prosecution history of any other patent or patent application, regardless of whether there are other patent applications that are considered related to the present application, and regardless of whether there are other patent applications that share a claim of priority with the present application.

[0039] Numerous embodiments are described in the present application, and are presented for illustrative purposes only. The described embodiments are not, and are not intended to be, limiting in any sense. One of ordinary skill in the art will recognize that the disclosed embodiment(s) may be practiced with various modifications and alterations, such as structural, logical, software, and electrical modifications. Although particular features of the disclosed invention(s) may be described with reference to one or more particular embodiments and/or drawings, it should be understood that such features are not limited to usage in the one or more particular embodiments or drawings with reference to which they are described, unless expressly specified otherwise.

[0040] The present disclosure is not a literal description of all embodiments of the invention(s). Also, the present disclosure is not a listing of features of the invention(s) which must be present in all embodiments. A description of an embodiment with several components or features does not imply that all or even any of such components/features are required. On the contrary, a variety of optional components are described to illustrate the wide variety of possible embodiments of the present invention(s).

[0041] The following description has been presented for purposes of illustration and description and is not intended to be exhaustive or to limit the embodiments to the precise form disclosed. Many modifications and variations are possible in light of the teachings disclosed herein.

[0042] The embodiments were chosen and described to explain principles of operation and their practical applications. However, the scope of the invention is to be defined by the claims.

[0043] The major technical reason for inflexibility in network infrastructure has been related mostly to the proprietary hardware and rigid software architecture in the existing network elements (routers, switches, gateways, cellular base-stations, WiFi access points, etc.). With recent advancements in semiconductor device manufacturing, there is no longer a cost barrier to add computing power to many electronics in the market including networking infrastructure. The addition of such compute capabilities would open up new opportunities for programmable platforms in the network and ultimately creating more flexible network architecture

and business models.

[0044] The Distributed Software Defined Network (dSDN) disclosed herein is an end-to-end architecture that enables secure and flexible programmability across a network with full lifecycle management of services and applications (fxApp). The dSDN also harmonizes fxApp deployment across the network independent of the hardware vendor. As a result, the dSDN simplifies the network deployment lifecycle from concept to design to implementation to decommissioning. In this disclosure, the dSDN is applied to the wireless networks as an exemplary embodiment. However, the dSDN is not limited to wireless networks embodiments and it could be applied to many other network types including enterprise, wireline service providers, data centers, and Internet of Things (IoT).

[0045] Figure 1 demonstrates the network architecture of a 4G system 100. (In alternative embodiments, the system and method disclosed may also be implemented in a 2G/3G network as well). In a cellular network, the base station or BS (denoted as BTS in 2G, NodeB or NB in 3G, and eNodeB or eNB in 4G systems) is responsible for termination of a wireless link (air-interface) to the mobile device (also known as the User Equipment (UE)). The BS then transports the user data to the core network and communicates control-signaling messages with the core network. In a typical cellular network, there are thousands of BS's covering nations. Each BS covers an area known as a cell. As the demand for mobile Internet expands, the mobile network operator (MNO) needs to deploy smaller cells so it can reuse the frequency more often.

[0046] A BS is made up of the following main functional blocks: 1) radio frequency (RF) front end; 2) clock; 3) baseband; 4) power manager; and 5) central processing unit (CPU). Some BS's also have a dedicated packet processor (PP) to accelerate packet processing in hardware. BS vendors may also use custom or merchant System-on-a-Chip (SoC) or Multi-Chip-Packaging (MCP) solutions to combine various functions into a single chip (e.g., PP, CPU, and baseband).

[0047] Even though there has been attempts to open up various interfaces in the BS (such as the Open BS Architecture Initiative that defines interfaces between these functional modules in the BS), there has been very little to no efforts to unify the

programmability of the BS itself. As a result, the MNOs suffer from the following difficulties. First, the core network Internet edge (CNIE), Packet Data Gateway (PDG) and the surrounding functions are becoming extremely complicated, non-scalable, and expensive. Second, each MNO needs certain customization and feature sets. Currently, they depend on their vendors for these customizations, which could cost the MNO tremendously both financially and in regards to time-to-market (TTM); hence, hindering innovation. In addition, usually these features are put into standards or in the vendor's feature set, thus eliminating the MNO differentiation against the other MNOs. Third, if the MNO is multi-vendor in their CNIE, coordinating all the vendors to implement the same features is usually a difficult and a time-consuming effort. As a result, more add-on network appliances are introduced into the CNIE which adds to the network management complexity. Fourth, as a BS becomes Internet Protocol (IP) based, there is more visibility into the user traffic types and new innovative opportunities are missed for creative traffic shaping features, backhaul bandwidth optimization, prioritization at radio edge, power management algorithms, etc. Fifth, many features implemented in CNIE present suboptimal performance. For example, the filtering enforcement at CNIE is fundamentally inefficient since the packets have to travel all the way through the expensive air-interface, the backhaul, various other core network elements and transport networks to get to the CNIE. Sixth, the Radio Access Network (RAN) deployments are a very expensive endeavor for MNOs. The current rigid BS designs limit innovation and force the MNOs to undergo major upgrades every few years.

[0048] The problems stated above apply to many different types of networks even though here they are presented in cellular networks as a focus. In the present disclosure, the dSDN exhibits a new paradigm in the software programmability of networks that would address the problems above and enable many more advanced features.

[0049] The dSDN may be located at a network element (or system) 200 which is shown in detail in Figure 2 or in alternative embodiments the functions of the dSDN may be divided among a plurality of network elements (or systems) which are similar in structure to network element 200. Each network element 200 may comprise one or

more system control logic 202 coupled with at least one or a plurality of processor(s) 204, system memory 206, a network interface 208 (including a transceiver 208a), and input/output (I/O) devices 210. The processor(s) 204 may include one or more single-core or multi-core processors. The processor(s) 204 may include any combination of general-purpose processors and dedicated processors (e.g., graphics processors, application processors, baseband processors, etc.). System control logic 202 for one embodiment may include any suitable interface controllers to provide for any suitable interface to at least one of the processor(s) 204 and/or to any suitable device or component in a packet network in communication with system control logic 202. System control logic 202 for one embodiment may include one or more memory controller(s) to provide an interface to system memory 206. System memory 206 may be used to load and store data and/or instructions, for example, for network element 200. System memory 206 for one embodiment may include any suitable volatile memory, such as suitable dynamic random access memory (DRAM), for example. System memory 206 may also include non-volatile memory including one or more tangible, non-transitory computer-readable media used to store data and/or instructions, for example, such as the embodiments described herein with regard to the dSDN. The non-volatile memory may include flash memory, for example, and/or may include any suitable non-volatile storage device(s), such as one or more hard disk drive(s) (HDD(s)), one or more compact disk (CD) drive(s), and/or one or more digital versatile disk (DVD) drive(s). The system memory 206 may include a storage resource physically part of a device on which the network element 200 is installed or it may be accessible by, but not necessarily a part of, the device. For example, the system memory 206 may be accessed over a network via the network interface 208 and/or over Input/Output (I/O) devices 210. Network interface 208 may include a transceiver 208a to provide a radio interface for network element 200 to communicate over one or more network(s) and/or with any other suitable device. Network interface 208 may include any suitable hardware and/or firmware. The network interface 208 may include a plurality of antennas to provide a multiple input, multiple output radio interface. Network interface 208 for one embodiment may include, for example, a wired network adapter, a wireless network adapter, a telephone modem, and/or a wireless modem. For one

embodiment, at least one of the processor(s) 204 may be packaged together with logic for one or more controller(s) of system control logic 202. For one embodiment, at least one of the processor(s) 204 may be integrated on the same die with logic for one or more controller(s) of system control logic 202. In various embodiments, the I/O devices 210 may include user interfaces designed to enable user interaction with the network element or system 200, peripheral component interfaces designed to enable peripheral component interaction with the network element or system 200, and/or sensors designed to determine environmental conditions and/or location information related to the network element or system 200. In various embodiments, the peripheral component interfaces may include, but are not limited to, a non-volatile memory port, a universal serial bus (USB) port, an audio jack, and a power supply interface.

dSDN Architecture

[0050] In the dSDN architecture, the network features are virtualized and may be distributed across separate network elements that cooperate together to create an advanced, programmable, and scalable network. In an alternative embodiment, the network features may be located at a single network element. A high-level overview of a dSDN system 300 is depicted in Figure 3. The dSDN system 300 consists of a flexible network device (fxDevice) 302, a flexible cloud platform (fxCloud) 304, an application management portal (fxManager) 306, and an infrastructure application market place(fxStore) 308. The fxDevice 302 is a network device that is powered by a sandboxing operating system named flexible operating system (fxOS) 302a. The sandboxing operating system ensures each application runs as a dedicated process in sure isolation from the other applications. The fxOS 302a may be built based on an existing sandboxed operating system (OS) (e.g., Android®) by extending several aspects of such an OS with routing/networking layers and supports for operating as the wireless infrastructure. The fxDevice 302 may host several independent and securely isolated applications (on top of fxOS 302a) named here fxDeviceApp 302b.

[0051] In the dSDN system, fxDeviceApp 302b may have a sister app in the backend cloud infrastructure (i.e., flexible cloud platform 304) referenced here as fxCloudApp 304a. The fxCloudApp 304a in the cloud is paired with its fxDeviceApp 302b in the fxDevice 302. The fxCloudApp 304a and the fxDeviceApp 302b

collectively form a distributed application (dApp or fxApp). In this description, when fxDeviceApp is referenced it shall mean any application that may have software components in the fxDevice, fxCloud, or both. In general, an fxApp package may include the following software components:

fxDeviceApp binary;

fxCloudApp binary;

Manifest files; and

Signatures.

[0052] It is important to note that the fxDeviceApp 302b and fxCloudApp 304a could use any protocol to communicate with each other and there is no need for standardizing this communication allowing for ultimate freedom for the developers. This allows for the system to operate in a loosely coupled autonomous fashion allowing for asynchronous communication in a distributed fashion.

[0053] The fxApps lifecycle is managed via fxManager 306. The fxManager 306 presents a user-friendly portal to the network administrator (admin) to discover, test prior to deployment, provision, and deprovision dApps. Using fxManager 306, the admin may discover new fxApps from the fxStore 308, which presents all the tested and certified vApps as well as showing the supported fxOS version, support hardware platforms, and other information such as reviews and number of commercial deployments by all NOIT customers.

fxOS

[0054] fxDevice 302 is defined as any networking equipment embedded with a special flexible operating system (fxOS) 302a. The purpose of fxOS 302a is to enable a carrier-class programmable platform. The fxOS 302a is configured to do, but is not limited to, the following. First, since fxOS 302a is designed for network equipment, it allows for efficient execution and running all the time. A plurality of power save modes may be implemented to ensure energy saving schemes without hindering the functionality of the fxDevice 302. Second, it enables simultaneous execution of several flexible applications (fxDeviceApp 302b) on the fxDevice 302. Third, it allows for application of a legacy compiled binary or byte-code of another language (for example, Java or Android®) in addition to fxDeviceApps 302b. Fourth, it allows

FastPath processing for data plane packets. The packet forwarding in this case separated from the control plane operations. The FastPath engine allows integration with specialized hardware accelerators or packet processors (PP). The packet forwarding may be implemented with software/kernel enhancements all in software. Another FastPath implementation may use both software/kernel enhancement and hardware packet processors (PP). Fifth, the fxOS 302a is capable of Deep Packet Inspection (DPI) and identifying all the flows and their related protocols, services and present this information in a format useful to application developers. The fxOS 302a can act on the data flows as the directed by the application developer. Sixth, applications are securely isolated from each other and to communicate with them is completely configurable by policies defined by the admin. Seventh, resource utilization of each application is policed such that an application may not be able to exceed its usage. For example, an application is pre-allocated the memory size, cache/storage space, and CPU cycles. Eighth, the applications may be signed with unique certificate security keys. The security keys and certificates may be allocated and/or signed by a certificate authority. The fxDevice 302 may be protected by validating signed applications to run or to install in the device. Ninth, it allows hot upgrade of the software and applications on the platform with little to no interruption to the operational aspect of the platform and its applications. Tenth, the fxOS 302a may boot by using the secure code from the network servers (cloud-booting). This would ensure tamper-proof software foundation for the fxDevice 302. Eleventh, there may be a secure and programmable firewall in the fxOS 302a. This embedded firewall protects against attacks to the fxDevice 302 and network attached to the network. The fxOS 302a firewall may be configured by the developer and it does allow replacing of attack detection algorithms (e.g., man-in-the-middle detection algorithm). The fxOS 302a may allow secure caching of user data, webpages, and media files (video and audio) in the fxDevice 302. The secure connections to the cloud (fxCloud 304) can enable sharing and control of the caching between the fxCloud 304, fxDevice 302, or the rest of the network. Twelfth, the fxOS 302a can support multi-threading and multi-core CPUs. This feature may dynamically distribute the threads to various CPU core without developers assistance.

[0055] The fxOS 302a allows secure connection to the fxCloud 304. This secure connection allows communication between fxDeviceApps 302b in the fxDevice 302 and fxCloudApp 304a in the fxCloud 304. The fxOS 302a controls the access of applications to platform APIs. An application is categorized into an Access Level (AL) based on which the fxOS 302a decides that the application does not exceed its AL and access APIs that it is not authorized. The fxCloud 304 and the fxOS 302a create a virtual fabric (fxVF) for messaging between applications. The actual message can travel directly between two fxDevices or it may traverse the fxCloud 304. The messaging complexity may be abstract for the developer.

[0056] Figure 4 demonstrates an examplary view of the software layers in the fxOS 302a. Each layer of this software stack is modified and redefined to optimize for embedded networking equipment of wireless and wireline nature. Starting from the bottom of the stack, the kernel also connects to the hardware resources via the device drivers. Examples of such resources are wireless baseband SoC 402, hardware packet processor 404, Wide Area Network (WAN) uplink interface 406, cache and storage 408, and multi-core CPU 410. The OS kernel 412 is enhanced with the FastPath function 414 to accelerate packet processing (by help of hardware features such as Intel's Data Plane Development Kit (DPDK) or pure software enhancements) and other related data path functions. The enhanced kernel with FastPath 412, 414 would enable visibility into the data flows, sniffing the Non-Access Stratum (NAS) signaling (which is the signaling between the UE and the Core Network and the RAN is supposed to be transparent to), policy enforcements, regular packet forwarding functions, collection of flow statistics into Flow Information Base (FIB), and encryption/decryption functions.

[0057] Above the kernel, there are several tools 416, native daemons 418, native libraries 420 and Hardware Abstraction Layers (HAL) 422. These tools abstract out the hardware dependencies for the upper layers and programmers. The Runtime 424 is an embedded virtual machine capable of securely isolating and executing the applications. System Services 426 are a set of services always running and available to the developers (e.g., timing and messaging services).

[0058] fx-Framework Library 428 consists of several Frameworks. The new

frameworks are the library extensions introduced explicitly for the dSDN framework. Each of these frameworks adds a set of methods of (functions) and data structures for the following examples:

Wireless Manager 428a: manipulation, monitoring, and configuration of the wireless interfaces;

System Manager 428b: configuration, provisioning, and changing major settings of the fxDevice 302;

Flow Controller 428c: allows for manipulation of data path, tunneling, switching, and optionally coordinate this activity with fxCloud 304;

Energy Management 428d: enables fine-grained control over various elements in the fxDevice 302 that could be moved into various power stares, for example: ON, OFF, SLEEP, SUSPEND;

Big Data Manager 428e: manipulation, processing, and organization of data collected from various elements. This framework could enable close coordination between the fxDevice 302 and the fxCloud 304;

Content Manager 428f: for data sharing (database sharing) between the applications within the fxDevice 302 or the fxCloud 304 and between applications in fxDevice 302 and fxCloud 304. The Content Manager 428f may use URI to address the contents to be shared. The Content Manager 428f allows access to the application data according to the policy settings and permissions;

Policy Manager 428g: responsible for execution and implementation of polices set up by the admin. The application developers could use this framework to perform queries about the permissions, limitations, and rules;

Security Manager 428h: allows for access to the security protocol libraries and rewriting some of security algorithms such as the man-in-the-middle detection algorithm;

General Framework: general compute and logic building that may be

inherited from existing general OS frameworks.

[0059] Using the frameworks, there are potentially at least two types of application types that are possible. First, the System Native Applications 430 that are provided as the initial application load into the platform. These applications could be used by other applications by links or API. Second, the fxDeviceApps 302b that are written by third party developers or the NOIT.

[0060] Figure 5 further details the FastPath 414 architecture. In this approach, the FastPath 414 is divided into the Virtual Switch (data-plane) 502 and the Switch Controller (control-plane) 504. Such separation makes possible flexible deployment wherein the function of the Switch Controller 504 could move to the fxCloud 304 by an admin decision or by the dSDN system intelligence for example in the case of failure, redundancy, stateful reboot, or Hot Upgrade. The Virtual Switch 502 may include several functions and may interact with the Switch Controller 504 in the following exemplary ways:

Firewall 502a: implements the policies given to it by the firewall logic 504a in the fxOS Daemons.

Flow/NAS Discover 502b: continuously monitors data packets and discovers new flows and NAS signaling. It would then report it to the DPI Logic 504b where the flow intelligence resides and matching to meta-data happens. DPI Logic 504b in turn updates the Flow Information Base Information (FIB) 502c of the Virtual Switch 502.

FastPath & DPI Processing 502d: forwards, routes packets, and performs DPI functions as instructed by the FIB 502c. It also collects statistics of packets and reports them to the Monitoring Logic 504c.

Policy Enforcement 502e: this function enforces various policies on the traffic such as QoS marking according to the policies received from the Policy Logic 504d.

Shaper 502f: this function could shape (queue) the traffic according to the available bandwidth on the uplink or WAN interface.

Virtual Fabric (fxVF) 504e: enables transparent switching of application and system messages of a dApp between the fxCloud 304 and the fxDevice 302 and between different dApps. The fxVF 504e is an abstraction layer that hides most of the complexities of messaging from the developers. The fxVF 504e uses the policies and firewall rules to enforce security and policies.

[0061] The fxOS 302a is mostly used for networking applications. There are some potential use cases where there is a need for a general purpose OS to run the legacy software applications with no need of recompilation. An example of a double OS situation may be where a digital signage (using a general purpose OS such as Android®) in a shopping mall also acts as a smart small-cell (using the fxOS 302a). In such a solution, any existing Android® application (for example) could be loaded in the fxDevice 302 and in parallel networking applications (fxDeviceApps 302b) could run on the same fxDevice 302.

[0062] Figure 6 presents a potential software layer of the fxOS 302a co-existing alongside a General Purpose OS 602. Another implementation may be a standalone fxOS without the company of another general OS. It is important to note that the shown co-existence allows reuse of the kernel so there would be no need to re-port the drivers of hardware resources twice.

fxCloud

[0063] The fxCloud 304 is an integral part of the dSDN framework. The fxCloud 304 connects to various parts of the fxDevice 302 to form a single virtual view of the system. Examples of the main fxCloud 304 responsibilities include the following. First, it interacts and manages all applications, firmware, and fxOS 302a in the fxDevice 302. Second, it secures isolation environments for distributed apps. Third, it directs the Virtual Machine lifecycle management including load-linked VM creations and destruction (Cloud Breathing). Fourth, the fxCloud 304 executes instructions defined by the fxManager 306. Fifth, it implements uniform policy (including security) distribution and execution across dSDN 300 (including the fxDevice 302, fxDeviceApps 302b, fxCloudApps 304a, and dApps). Sixth, Plug-and-Play commissioning of the fxDevice 302 introduction

and network expansion. Seventh, Distributed Resource Service (dRS) by which distributed applications can seamlessly communicate and message to each other using published APIs or proprietary methods within the pre-defined policies. Eighth, security violation discovery and alert system. Ninth, translation and/or exposure of Resources APIs (RAPI) to the systems outside the dSDN 300 within pre-defined policies. Tenth, fxCloud 304 in coordination with the fxDevice 302 creates a Distributed Notification Service (dNS) across the dSDN 300 by which the applications could be notified of an event to wakeup and/or respond to the event. Eleventh, fxCloud 304 in coordination with the fxDevice 302 creates a Distributed Content Management Service (dCMP) which provides a virtualized and distributed database system for applications to share application-specific or system-specific information with the pre-defined policies. Twelfth, the Switch Controller 504 function in the fxCloud 304 could take control of the controller function of the fxOS 302a in the fxDevice 302. This would allow controller switching from local to remote and back. Examples of such a configuration is a temporary reason where the fxOS Switch Controller 504 may not be available during reboot or software upgrade.

[0064] In the discussion below, these services and features are expanded upon.

fxDeviceApp-0 & fxCloudApp-0

[0065] The fxDevice 302 and fxCloud 304 have embedded System Applications categorized as fxDeviceApp-0 and fxCloudApp-0, respectively. The fxDeviceApp-0 is responsible for all default and core functional capabilities of the fxDevice 302 as listed below:

Firmware of the fxDevice;

Default communication protocols (e.g. LTE S1-AP, baseband software, security protocols, GTP, DNS, tunneling protocols);

Message communication protocol between the fxDevice and fxCloud;

Initial fxDevice settings;

Boot Loader;

fxDevice X.509 digital certificate;

OS and Kernel upgrades;

Upgrade and commissioning agents for the fxDeviceApp-0 upgrades and related procedures;

Establishing and initiating the message communication protocol between the fxDevice and fxCloud;

General fxDeviceApp install and upgrades;

Access to fxDevice hardware and software information.

The fxCloudApp-0 is responsible for all default and core functional capabilities of the fxCloud 304 such as:

Upgrade and commissioning agents for the fxCloudApp-0 upgrades and related procedures;

Hypervisor upgrades;

Virtual Machine lifecycle management (e.g. creation, suspension, destruction);

fxCloud X.509 digital certificate management;

OS and kernel upgrades;

General fxCloudApp install and upgrades;

Default communication protocols (e.g. security protocols, DNS, tunneling protocols).

Each software component can be managed and updated individually. To simplify the management of these software components, each software components can be sub-numbered such as fxDeviceApp-0.1, fxDeviceApp-0.2, fxCloudApp-0.1, fxCloudApp-0.2, etc.

fxManager

[0066] The network administrator may use the fxManager 306 to control much of the dSDN system 300. The fxManager portal could use HTML5, for example, as

a frontend technology. The major functions of the fxManager 306 may include the following.

fxDevice Management:

Commissioning (plug-and-play), de-commissioning, firmware/OS upgrading/downgrading;

Suspend/resume functions;

Unification of zones and partitions for example in case of network merger;

Detailed management of fxDevices (remote secure login) where the administrator may zoom into a particular or a group of fxDevices to monitor and set management alarms;

Security policy setting.

Application lifecycle management: fxManager 306 may work, coordinate, and/or perform these tasks in conjunctions with fxCloud 304 for:

Provisioning, de-provisioning, upgrade/downgrade applications. Some applications may only have a fxDevice component (Device-Centric Apps), may only have fxCloud component (Cloud-Centric Apps), or may have both fxDevice and fxCloud components (Hybrid Apps);

Creating a Test Network Environment (TNE) where the administrator can test certain configuration and applications without impacting the production networks;

Uploading applications developed by the NOIT or their partners into the Application Repository (AR). The AR is placeholder where the application packages are downloaded and stored for testing and verification prior to installation into the live dSDN system. An application could have several components (e.g. fxDeviceApp binaries, fxCloudApp signatures, manifest files, signatures) bundled together to form the Distributed Application Package (dAP);

Browsing through the certified applications in the fxStore and downloading them to the AR;

Application license accounting services by which a secure and accurate accounting of the installed applications are performed regularly. This inventory management function allows the administrator and the 3rd party ISV to account for live and active instants of the software in the network;

Application review tool where the network admin could use to review feedbacks and comments of other NOIT (maybe anonymous reviews) and could input his/her reviews for others (maybe anonymous reviews).

fxCloud Management:

Zoning and partitioning the network for administrative purposes. Zones and partitions could optionally put into different Virtual Machine (VM);

VM load management and Cloud Breathing policies;

The configuration conflict resolutions. Some configurations applied to the resources may conflict with each other (e.g., one firewall rule may state drop Netflix packets explicitly and another rule may state allowing Netflix explicitly). The fxCloud resource manager could monitor these configurations and discover the conflicts and signal those to the network administrator.

Security Management:

Security policy setting;

Inter-App communication setting;

Security of communication between fxDevice and fxCloud;

API Access Level (AL) definitions and (re-)assignment to the applications (permissions);

Risk Analysis of the applications;

Certificate and signature verification of the applications;

Content sharing between applications and associated policies.

[0067] An fxManager Portal per the above description may have an "Account" button which can be used to create admin users and their privileges. The fxManager Portal could also include a geographical map illustrating locations of fxDevices and their status. The fxManager 306 functions could be integrated into other network management tools. The fxManager 306 could potentially build the inventory of the network devices (fxDevices) showing all the available devices and statistics. As described above, the network administrator could optionally procure the applications a third party hosted application store (fxStore). The fxStore 308 could potentially categorize the applications several groups (as shown in Figure 7 which is an example view of the fxStore portal). The fxStore 308 could also show the reviews of the advertised applications. In order to maintain quality, the third party fxStore 308 may perform rigorous testing of the applications and accompany those results with the advertised application.

fxSDK

[0068] The flexible Software Development Kit (fxSDK) may include a development environment and other tools to facilitate development, testing, debugging and verifications of applications for dSDN environments. The fxSDK is unique in several aspects exemplified as follows. First, since the dSDN applications may have a device component (fxDevice 302) and cloud component (fxCloud 304), the fxSDK allows the developer to develop the components together to simplify the development and testing. Second, the dRMS offers various system level APIs with remote accessibility. In other words, the APIs in the fxDevice 302 could be accessed via the applications in the fxCloud (fxCloudApps) and vice versa. The fxSDK simplifies the usage system created APIs and application created APIs. Third, it is essential for the dSDN to ensure quality and security of applications in the network. The fxSDK may be accompanied with an extensive Risk Analysis Utility (RAU) which verifies all the APIs that are being used by the application and based on its potential danger to the

network, it would show the risk analysis and may make specific suggestions to reduce the risk. Once completed, the risk analysis result is included in the dAP for posting to the fxStore and consumed by the fxManager user (the admin). Fourth, the fxSDK would also ensure that the applications do not exceed their planned memory and resource usage. Fifth, the Integrated Development Environment (IDE) may provide various tools to actively demonstrate errors, defined APIs, security dangers, and excessive resource usage. Sixth, the IDE could also provide a flexible Simulator (fxSimulator) for the developer test the application in a network setup in presence of other network elements.

Deployment Examples

[0069] The dSDN 300 offers flexible deployment options. In this section, a few exemplary embodiments are presented.

[0070] Figure 8 demonstrates a shared cloud deployment where several NOITs (802, 804, 806) share an fxCloud 808. In order to ensure complete isolations, each NOIT may be assigned a separate Virtual Machine (VM) 802a, 804a, 806a. A good example of this deployment option may be when multiple service providers outsource their fxCloud deployment to a third party vendor that offers a SaaS/PaaS solution. It is important to note that in this option, each NOIT should have its own secure instance of the whole system. This option could potentially create a full outsourcing model for network operations including possibilities of seamless merging of networks of two or more NOITs.

[0071] Another deployment option may be a Zoned Deployment as shown in Figure 9. In this option, a large NOIT may partition their network into a plurality of zones (Zone #1, Zone#2,… Zone#n) for administrative, software compatibility grouping, or other reason. For example, it is possible that in a large network deployment, there would be different versions of fxOS with varying capabilities in the network (the older hardware may not support newer fxOS version). In this case, the service provider may decide to group the fxDevices per fxOS versions for management simplifications.

[0072] Figure 10 is another embodiment deployed in a Programmable & Virtualized Cellular Network. In this example, the dSDN is applied to the cellular

networks (e.g., LTE). As shown, the fxDevice 1002 here is the LTE eNB (4G base-station) and the fxCloud 1004 hosts the LTE core network (EPC) functions such as MME, S-GW, and P-GW in separate VMs. Within each EPC function, new features could be added using the dSDN framework. For example, a new application to optimize signaling for Machine-2-Machine (M2M) devices could be loaded into the fxDevice 1002 and the MME function in the fxCloud 1004.

PRINCIPAL PROCEDURES & SERVICES

[0073] The dSDN framework could offer extensive services and capabilities that would simplify the programmability of the network. In this section below, a set of main procedures and services are presented as further exemplary embodiments.

fxDevice Commissioning Provisioning

[0074] Figure 11 illustrates a signaling flow chart for a fxDevice Plug-and-Play Commissioning Procedure. This procedure enables fxDevice commissioning and initial setup to provide a seamless and Plug-and-Play (PnP) deployment. The fxDevice relies on the fxDeviceApp-0 and the fxCloudApp-0 to connect to the backend management system and perform the commissioning procedure. In step 1101, the fxDevice 1120 tries to discover the fxManager 1130 using the fxManager Fully Qualified Domain Name (FQDN). The fxDevice 1120 is configured to always look for the same FQDN. If the NOIT has a private cloud deployment, the DNS server in the NOIT will be configured to point to its own fxManager IP address. If the cloud is shared, the NOIT will configure their DNS server to point to the shared cloud IP address. In step 1102, the fxDevice 1120 receives the IP address of the fxManager 1130. In step 1103, the mutual authentication may be performed where the fxDevice 1120 authenticates the fxManager 1130 and vice versa. In step 1104, a secure tunnel may be created between the fxDevice 1120 and the fxManager 1130. In step 1105, the fxDevice 1120 may optionally request for the latest firmware/OS version. In this phase, the fxDevice 1120 informs the fxManager 1130 of its hardware information (e.g. vendor, model number, CPU model/speed, memory/cache size) and software information (e.g., current firmware version, current OS version, fxDeviceApp-0 version package stating versions of fxDeviceApp-0 components). In step 1106, the fxManager 1120 may send the latest firmware/OS version (or point

the fxDevice to the right URL to download the latest load). In step 1107, if a new firmware/OS load is downloaded and verified, the fxDevice 1120 installs it. In step 1108, the fxDevice 1120 requests the default settings and the default application package (the initial applications that the NOIT admin would like to install in fxDevice 1120 prior to other applications). In step 1109, the fxManager 1130 prepares the fxCloud 1140 for the new fxDevice 1120 integration into the network. In step 1110, once completed, the fxCloud 1140 informs the fxManager 1130 of its readiness. In step 1111, the fxManager 1120 sends all the default settings and the default application package to the fxDevice 1120. In step 1112, the fxDevice 1120 then sets up a secure connection to the fxCloud 1140 (more precisely the fxCloudApp-0). In step 1113, a commissioning completion message is set from the fxCloud 1140 to the fxManager 1130. In step 1114, the fxManager 1130 signal to the fxDevice 1120 the completion of the commissioning and starts th regular operation of the fxDevice 1120. At this phase, fxManager 1130 can optionally modify the settings in the security connections between fxDeviceApp-0 and fx-CloudApp-0 and between fxDeviceApp-0 and fxManager 1130.

Application Provisioning Procedure

[0075] The Application Provisioning Procedure enables provisioning and de-provisioning of applications across the dSDN system. For simplicity, the term provisioning in this disclosure is used to present all similar procedures of provisioning and de-provisioning. The application provisioning procedures are usually triggered by the network administrator and are orchestrated by the fxManager, which works in collaboration with the fxDeviceApp-0 and fxCloudApp-0.

[0076] Figure 12 shows an example procedure for Application (dApp) Provisioning. In step 1201, the network admin identifies the applications that would need to be installed in the dSDN system. These applications are already downloaded (from the fxStore or other sources) into the Application Repository (AR). Prior to installation in the live network, the authorized network admin 1220 has probably performed rigorous testing of the application in the test network. In step 1202, the fxManager 1230 performs a detailed analysis on the potential risks that this application may

create on various parts of the network and other applications. The analysis tool uses the secure manifest file and other information to discover, for example, all the APIs used by the application, the required access-level authorization level for each of those APIs, requirements on the fxVF (inter-app, intra-app communication needs), and usage of platform resources including conflict discovery and resolutions. In step 1203, the admin defines the deployment scope that the application would be applied. Examples of deployment scopes could be a given zip code, a city, an administrative domain (zone), a shopping mall, an office building, or manual handpicking of sites or fxDevices 1240. The fxManager 1230 verifies compatibility of the OS version and resouces requirements of the application and the fxDevices 1240. If the fxManager 1230 discovers incompatibility, it informs the admin and request adjustment to the deployment scope or proposes upgrading incompatible fxDevice if possible. In step 1204, the admin 1220 initiates the installation process. In step 1205, the fxManager 1230 unpacks the dApp and if there is fxDeviceApp component, it would prepare it for submission to the fxDeviceApp-0 of fxDevices in the deployment scope. In step 1206, installation commands are sent to the fxDeviceApp-0s in a secure connection already set up as part of the fxDevice Commissioning. In step 1207, the fxDevice 1240 verifies the fxDeviceApp package and performs necessary integrity checks of the received software package. Once verified, the fxDeviceApp is installed and re-verified. In step 1208, the completion of successful install is sent to the fxManager 1230 by the fxDevice 1240. In step 1209, the fxManager 1230 prepares the fxCloudApp component of the dApp (if any). In step 1210, installation commands are sent to the fxCloudApp-0s in a existing secure connection. In step 1211, the fxCloud 1250 verifies the fxCloudApp package and performs necessary integrity checks of the received software package. Once verified, the fxCloudApp is installed and re-verified. In step 1212, the completion of successful install is sent to the fxManager 1230 by the fxCloud 1250. In step 1213, the fxManager 1230 informs the admin 1220 of the successful installation process.

Hot Upgrade Procedure

[0077] The Hot Upgrade refers to a procedure by which the software upgrades

on the system have no or minimal implication on the functionalities offered by the software component subject to the upgrade process. Herein are presented two types of software upgrades. For simplicity, the use of the term upgraded in this disclosure represents both upgrade and downgrade since they both use identical processes. First, upgrade of applications on the fxDevice (i.e., fxDeviceApp) and fxCloud (i.e., fxCloudApp). Second, upgrade of core functions in the fxDevice (aka fxDeviceApp-0) or fxCloud (aka fxCloudApp-0).

[0078] The upgrade procedures for fxDevice and fxCloud are similar. Here, the focus is on the fxDevice upgrade process since it is technically more challenging due to stricter resource limitations in the fxDevice.

General Application Upgrade

[0079] The applications could be upgraded automatically or manually by the network admin. In either case, the installation of the upgrade follows a similar procedure as the Application Provisioning Procedure. Figure 13 presents the state of the machine for the application upgrade process. In state 1301, the old version of the application is still running. In Load state 1302: the new version of the application is downloaded in the local storage while the old version is still running. In Install state 1303: the new version is installed (in the memory) while the old version is still running. In Run state 1304: the new version is activated taking charge of all the related data and application state and the old version is deactivated while still remaining in the local storage. In Commit state 1305: the old version is fully removed after ensuring the new version is running properly as expected.

fxDeviceApp-0 Upgrade

[0080] The fxDeviceApp-0 is a collection of software components that perform the core functionalities of the fxDevice. As a result, this hot upgrade is quite challenging. The most important thing is to ensure that major functionalities of the fxDevice (such as packet forwarding) remain

intact during the upgrade process. The fxDeviceApp-0 upgrades may be categorized as:

- No OS Kernel upgrade; or
- OS Kernel upgrade.

No Kernel Upgrade

[0081] As described earlier, the packet forwarding function could be broken into the Virtual Switch and the Switch Controller. In order to maintain, the packet forwarding function, the Switch Controller function could be performed by another device or a second processor in the same device while the fxDevice is being upgraded. Figures 14A-14C demonstrate a few examples of distributed Switch Controller function during the upgrade. In some cases, it may be possible for the fxCloud to take over the Switch Controller function (Figure 14A), or a neighboring fxDevice (Figure 14B), or second CPU in the same fxDevice (Figure 14C). The actual software upgrade procedure would be similar to Application Provisioning Procedure and the state machines are the same as the one shown in Figure 13.

Kernel Upgrade

[0082] In this case, the packet forwarding process is mostly unavailable. Therefore, one potential solution might be for the fxDevice to redirect the entire bit stream to a neighboring fxDevice. In other words, the fxDevice would have just a bare minimum routing function working and the rest of the function would be performed by a neighboring fxDevice.

[0083] All the other upgrade procedures and state machines are similar to the ones performed for the No Kernel Upgrade process.

Virtual Fabric Service

[0084] The Virtual Fabric (fxVF) provides an abstraction layer for application to communicate with each other whether they are in the fxDevice or fxCloud. Various frameworks and services may use the fxVF service. Figure 15 illustrates fxVF 1502a, 1503a, 1504a in the fxDevices 1502 and 1503 and fxCloud 1504. The fxVF 1502a,

1503a, 1504a may use Extensible Messaging and Presence Protocol (XMPP) for this messaging as the default protocol. It is important that the developers may use their own communication protocols between the fxDeviceApps 1502b, 1503b and the associated fxCloudApp 1504b. fxVF 1502a, 1503a, 1504a provide a secure routing mechanism.

Intra-App Messaging

[0085] This is an example of where one application in the fxDevice communicates with the same instance of the app in another instance of the same application in another fxDevice. The actual messages could go directly between the fxDevice or via the fxCloud. As an example, in the case of mobile networks, this messaging could be used to transfer user specific context from one eNB to another as a user hands off to a new eNB. In LTE, Private Messages on X2 interface could be used for messaging between the eNBs that act as the fxDevices.

Inter-App Messaging

[0086] In some cases, different applications may need to communicate with each other via their published APIs. In this case, the security policies set up by the network administrator determines which applications could communicate with each other for what purpose. The fxVF follows the security policies determined by the network administrator for inter-application communications.

distributed Resources Service (dRS)

[0087] The resources could be platform resources or APIs offered by the applications. The fxCloud and fxDevice resources could include (as examples):

Firewall;

Data and statistics;

Storage (usually abundant at fxCloud);

Compute (usually abundant at fxCloud);

Load evaluator;

General settings;

Routing engine (usually relevant to the fxDevice);

Virtual Machine master controller (usually relevant to the fxCloud);

Power controller (usually relevant to the fxDevice); and

Wireless engine (usually relevant to the fxDevice).

[0088] An app (fxDeviceApp or fxCloudApp) could expose APIs to be used by the other apps. The inter-app communication is enabled by the fxVF where the policy and security provisions are enforced. The APIs exposed may be RESTful (representational state transfer) and could travel across physical network elements. Since the fxManager defines fxVF policies, the administrator could ultimately specify which APIs between which apps could communicate with each other. Figure 16 demonstrates the logical interfaces between the platform resources and applications. As shown in Figure 16, the distributed Resources Service (dRS) 1602, 1603 comprises software agents residing in the fxDevice 1604 and the fxCloud 1606. These dRS agents manage the access to the platform resolutions (including potential configuration conflict resolution) as well as facilitating inter-app APIs. The dRS 1602, 1603 allows or disallows access to platform resource or inter-app communication according to the policies defined by the network administrator using the fxManager. In summary, the dRS 1602, 1603 provides services to application developers for:

Exposing APIs to other applications;

Configuring and managing platform resource;

Policy enforcement and authorization of applications access to platform resource and other app's APIs; and

Policy conflict resolution.

<u>distributed Content Service (dCS)</u>

[0089] The distributed Content Service (dCS) allows the developers to seamlessly store and share the contents generated by one application with other applications and its associated application in the cloud. The dCS simplifies access to the data and brings in storage virtualization to the applications. In other words, the developers no longer would need to know where the data is actually stored (in

the cloud or on the device) and would be able to access them easily. The dCS implementation may use Virtual Fabric (fxVF) and distributed Resources Service (dRS).

distributed Notification Service (dNS)

[0090] The distributed Notification Service (dNS) is another potential tool for developers that could wake or ping an application when a particular event has occurred. For example, a load monitoring application could be notified when the CPU load on a particular fxDevice (or a target area) exceeds a certain threshold. In turn, such an exemplary application could make smart decisions on reducing the load on the CPU by forcing handoffs of users to neighboring cells (i.e. fxDevices). The dCS implementation may use Virtual Fabric (fxVF), distributed Resources Service (dRS) and distributed Content Service (dCS).

Cloud Breathing Procedures

[0091] In general, resources (compute, storage) at the cloud are more abundant. However, software licensing costs and other limitation may require smart management of resources. The Cloud Breathing, here, is defined as a mechanism where the cloud resources are automatically expanded as load increases on the system or reduced as the load decreases. This creates an automatic elasticity in the cloud dimensions. Figures 17A and 17B demonstrate procedures for the cloud breathing. Figure 17A is expansion and Figure 17B is reduction. The Load Controller in the dRS 1602, 1603 could be used to monitor the load (step 1702) on the existing VMs (e.g. CPU or memory utilization loads). The VM Master of the fxCloudApp-0 1608 could effectively act on the decisions made by the dRS's Load Controller. Again, the network administrator via the fxManager defines the policies and thresholds for such decisions.

Security Aspects

[0092] The security aspects of this solution are of outmost importance in order to ensure quality in the product networks.

Identity

[0093] To create a security model, the dSDN network elements should have unique identities. The following identities may be defined:

fxDevice Identity (DID): this identity is unique globally and may be allocated at manufacturing and included in the X.509 digital certificate of the fxDevice;

fxCloud Identity (CID): this identity is unique to the NOIT domain and may be allocated by the network administrator and included in the X.509 digital certificate of the fxCloud;

fxDeviceApp Identity (DAID): this identity may be globally unique and may be allocated by the fxSDK at the point of code creation by a globally accessible server;

fxCloudApp Identity (CAID): this identity may be globally unique and may be allocated by the fxSDK at the point of code creation by a globally accessible server;

dApp Identity (AID): This identity may be globally unique and may be constructed by concatenation of DAID and CAID together;

Application Developer Identity (ADID): this is a globally unique identity allocated by a globally accessible server and may be included in the developer's X.509 digital certificate and is used to sign the final developed applications.

[0094] For addressability purposes, the identities may be presented in a URI format using the FQDN of the NOIT.

Access Level

[0095] The applications are given different access levels. The AL is used by the dRS to determine which APIs or class of APIs an application can access (e.g., a fxDeviceApp running on fxDevice should not be able normally to reboot the fxDevice). The required AL is generated by the fxSDK and included in the manifest files. It may also be published in the fxStore for that give application. A preset of ALs could be defined to categorize the applications security risks.

Software Security Verification

[0096] It is important for the target network element to verify the authenticity and integrity loaded software prior to install. The uniquely defined security keys of the application developers sign the applications. The following rules may be followed to ensure software security verification:

Only the verified OS/Firmware software can install on verified hardware;

Only the verified OS/Firmware software can run on verified hardware (continuous verification of essential parts of the software);

Only the verified fxDeviceApp software can install on verified hardware;

Only the verified fxDeviceApp software can run on verified hardware (continuous verification of essential parts of the software).

[0097] Each fxDeviceApp is accompanied by a manifest that is generated by the Integrated Device Electronics (IDE) at the time of compilation of the fxDeviceApp. The manifest file specifies which libraries and frameworks the fxDeviceApp uses. The fxManager uses this information to determine the security risk of the fxDeviceApp as well as the required Access Level (AL) to run this fxDeviceApp. In order to ensure that manifest file is actually genuine manifestation of the fxDeviceApp and its integrity remains intact, a hashing algorithm could be used to generate a signature. An example is shown below:

Signature = HMAC-SHA256(K, Message);

where

Message = fxDeviceApp + Manifest

K = shared secret key between fxStore and fxManager.

[0098] The signature is generated by the IDE/fxSDK at the compile/build phase and is packaged with application binary and the manifest file. Once the distributed application package (dAP) is downloaded into the fxManager (Application Repository), the components of the signature, application binary, and manifest file are unpackaged. The fxManager then uses the same hashing algorithm to calculate

the signature as above using the pre-shared key (K). If the calculated signature and the unpackaged signature match, it would prove the authenticity of the manifest file and the integrity of both manifest file and the fxDeviceApp.

[0099] Code Generation Process (Compilation):

fxDeviceApp compiled → Manifest file generation → Signature calculation → Create fxDeviceApp Package

[0100] Install Process (Consumption):

Un-package fxDeviceApp → Signature calculation → Signature comparison

[0101] This model works if the key K can be shared with two trusted parties (fxManager and fxStore). The manifest file that is generated by the fxSDK shall be secured by integrity checks to ensure it remains intact throughout the transaction (i.e. from compilation to consumption).

Communication Security

[0102] Security mechanisms built into the fxDeviceApp-0 and fxCloudApp-0 forces the fxDevice to only use the configured fxCloud servers for Software Security Verification, fxDeviceApp downloads, and fxDeviceApp-fxCloud communication. Optionally, the fxDeviceApp-fxCloud communication can be customized per application requirements. One implementation of this interface could use SPDY Protocol or per-application VPN.

[0103] For the purpose of inter-App communication, an Inter-App Communication (IAC) policy template is applied to an fxDeviceApp that defied the communication policies between the fxDeviceApps and fxCloudApps. The network administrator may use one of the pre-configured IAC policy templates (exemplified below):

Isolated: this type of applications cannot communicate with any other application in the same fxDevice and does not have any associated fxCloudApp;

Isolated-Extended: this type of fxDeviceApps cannot communicate with any other fxDeviceApps in the same fxDevice but could communicate with its associated fxCloudApp;

Private: a private fxDeviceApp in one fxDevice could communicate with same private fxDeviceApps in other fxDevice but does not have any associated fxCloudApp;

Private-Extended: a Private fxDeviceApps in one fxDevice could communicate with same private fxDeviceApp in other fxDevice and has its associated fxCloudApp;

Community: a group of fxDeviceApps that belong to the same community can communicate with each other;

Promiscuous: a Promiscuous app could communicate with any other Promiscuous application and Community application;

Custom: the network administrator could create custom IAC Policy templates and could include (as examples):

Template name;

Inherited pre-configured template if any;

The protocols allowed to use for communication;

The maximum data rate allowed for inter-app communication between a pair of fxDeviceApps or between an fxDeviceApps and an fxCloudApp;

Policies related to the other fxDeviceApps in the same fxDevice, in other fxDevice, associated fxCloudApp and unassociated fxCloudApps; Policies related to direct fxDeviceApp to fxDeviceApp communication or relayed via fxCloud communication.

Secure Boot

[0104] The secure boot refers to a capability where the main boot code is in the fxCloud with the following exemplary procedure:

The Boot Loader (BL) in the fxDeviceApp-0 of the fxDevice looks for a particular DNS (DNSSEC) name of the fxCloud. The network administrator should define the DNS entry in their network. If there is a private fxCloud, the resolved domain name points to the fxCloud. If using shared cloud, the resolved

domain name points to the cloud point of presence;

A secure tunnel (TLS) is created between the BL in fxDevice and the fxCloud using pre-burned X.509certificate;

BL identify itself to the fxCloud and include System Information;

fxCloud determines the appropriate boot file and points the BL to the exact address of the boot file in the fxCloud;

BL downloads the correct boot file;

BL runs Software Security Verification;

BL reboots the fxDevice and the system will be ready for operation.

Frameworks

[0105] The following describes an example of the API Framework for the dSDN. Some APIs are purely local to the fxDevice or the fxCloud and some may be extended from the fxDevice all the way to the fxCloud using dRS.

General Framework

[0106] This framework refers to general libraries and APIs inherited from the legacy OS. An example of the legacy OS may be Embedded Android®. This framework allows for general processing and may be used for algorithmic applications.

Wireless Framework

[0107] The Wireless Framework adds a set up functions related to managing and controlling the wireless module. Table 1 highlights some examples of methods/functions that may be available in the Wireless Framework.

Table 1: Wireless Framework	
Method	Description
discoverNeighbors	Discovers wireless neighbors and returns their identities
retrieveNeighborInfo	Retrieves detail information of neighboring BS/AP information. This method may transparently call cloud servers to gather more information
measureInterference	Measures wireless interference observed on a frequency or a set of frequency channels
setWirelessConfig	Sets various parameters in the wireless module such as power, frequency channels, Multiple Input/Multiple Output (MIMO) antenna configuration, etc.
definePHYReceiverAlgorithm	Defines the physical layer receiver algorithm
connectedDevice	Returns details about the connected mobile devices (length of connection, data tx/rx) to a given wireless interface (channel, band, sector)
forceOffload	Offloads connected mobile devices to other access technologies (e.g. from cellular to WiFi)
homeAreaNetworking	Control of home automation wireless technologies such as ZigBee or Z-Wave
setNeighborCells	Sets neighboring cellsinformation
forceHandoff	Handoffs connected mobile devices to the same access technology but different channel or frequency
topMovers	Identifies the mobile devices with highest degree of mobility

positionDevice	Accurate positioning of mobile devices which may include geo-fencing data
borrowSpectrum	Allows one BS to borrow spectrum from another
configureMACScheduler	Configures the MAC scheduler (for example prioritize a particular user)
loadBalance	Enables load balancing across radio channels
defineMACScheduler	Defines the MAC scheduler algorithm

Security Framework

[0108] The Security Framework allows the developers to use a specialized security functions/methods. Some of these new methods may use the legacy OS frameworks. Table 2 highlights some examples of methods/functions that may be available in the Security Framework.

Table 2: Security Framework

Method	Description
setDOSDetect	Detects DOS attacks on user plane as requested
configureFirewall	Provides firewall functions such as traffic filtering, permissions (this may use dRS)
defineDOSDetectAlgorithm	Allows replacing and redefining the DOS algorithm
encryptTraffic	Encrypts the content of a message or a class of traffic as requested
authenticateUser	Authenticate users asrequested
integrityCheckContent	Verifies authenticity of a message using its checksum information
configuresIPS	Configures IPS functions on the user plane

FastPath Framework

[0109] The FastPath Framework allows the developers to identify and manipulate the data path with a DPI capability. Table 3 highlights some

examples of methods/functions that may be available in the FastPath framework.

Table 3: FastPath Framework	
Method	Description
matchTraffic	Identifies and matches the traffic type requested by the developer
detectCongestion	Detects if there is congestion on the data path
identifyTopURLs	Identifies the most visited URLs by the users
detectLocalConversation	Detect conversations and packet routing between the end user on the same fxDevice
detectDevice	Detects traffic of a given mobile user device
redirectTraffic	Redirect data traffic to a given network element. The traffic may be identified with a user or a class of traffic
connectedDevices	Returns all the connected mobile devices to a given fxDevice
assignAddress	Allocates a particular IP address to the mobile device
setPriority	Set traffic priority to a class of traffic
markTraffic	Marks the user traffic with the desired QoS tags
setupTunnel	Sets up data tunnel from fxDevice to a destination
Adscript	Adds a JavaScript to an active transiting web page
detectIdenticalFlows	Identifies the identical flows coming from the WAN/uplink interface on the fxDevice
aggregateFlows	Enables aggregation of flows to save WAN/uplink utilization
routeTunnel	Routes a packet or a class of traffic onto an established tunnel
identifyTopDevices	Identifies users that generate most traffic load

Messaging Framework

[0110] The Messaging Framework allows the developers to send messaging between the applications residing in the fxDevice and fxCloud. Table 4 highlights some examples of methods/functions that may be available in the Messaging Framework.

Table 4: Messaging Framework	
Method	Description
sendIntraApp	Sends an Intra-App message from one fxDevice to another
sendInterApp	Sends an InterApp message from one application to another
sendfxCloud	Sends a message to the fxCloud
sendSMS	Sends an SMS to the user of choice

Caching Framework

[0111] The Caching Framework allows the developers to cache particular contents or files that are accessed frequently in the caching engine. The caching can be done locally in the fxDevice, clustered cache (shared amongst a few fxDevice), or cloud caching. Table 5 highlights some examples of methods/functions that may be available in the Caching Framework.

Table 5: Caching Framework

Method	Description
storeForward	Enables Store and forward model for a target class of traffic where the target traffic is matched and stored upon a condition and forwarded the condition is relieved
cacheWebSite	Caches the most visited web sites
cacheVideo	Caches the most viewed videos
cacheCloud	Caches the requested content or traffic type in the cloud storage in fxCloud

Management Framework

[0112] The Management Framework enables the developers to manage the BS platforms and perform administrative procedures. Table 6 highlights some examples of methods/functions that may be available in the Management Framework.

Table 6: Management Framework

Method	Description
upgradeFirmware	Started and executes the firmware upgrade procedure on the fxDevice
upgradeOS	Started and executes the operating system upgrade procedure on the fxDevice
remoteBootup	Performs remote boot up process where the fxDevice works closely with the fxCloud to perform the bootup
remotePower	Allows fxCloudApps to remotely turn on and off a fxDevice or elements in the fxDevice (e.g. the wireless)
gatherStatistics	Instructs fxDevice to gather specific statistics. Various commands may be consolidated for gathering statistics. Number of active users Stats of time spent by users in the cell Stats of quality perceived by the users Neighboring cell info Overall traffic passed through the system Total number of connected devices per frequency, per carrier, per site, per location Handover failure statistics Cloud aggregated data processing and full report Total traffic passed Applications used (meta-data correlated) Bandwidth consumed User's mobility pattern

setMonitoring	Allows the developer to get reports and statistics of the fxDevice traffics, errors, and neighboring environment. The reporting criteria could be set up as: 1) Period, 2) Event based (reports only if a threshold is passed; a threshold could be based on absolute numbers or deltas), 3) One-time (i.e. the information is pulled once). The exact parameters to get report on may use the same data structures used by the method "getStatistics".

getSystemInfo	Retrieves static and dynamic system info such as: • Hardware info: vendor, model number, capability profile. GPS, Cellular, WAN interfaces, RFID/NFC • Heat temperature • Vendor Specific Information • Software info: OS version, firmware information • CPU load, per-application load (CPU, memory, accelerators) • Loaded apps and status • Memory utilization • Storage utilization • Interface status & utilization (RF, backhaul, management...)
getfxDeviceLocation	Retrieves location of the fxDevice • Location would be presented in GPS coordinates and civil address • Location enhancement: Cloud, map data, and neighbor discovery could help more accurate positioning
getPowerConsumption Rate	Retrieves current power consumption rate of the fxDevice
configureWAN	Configures the WAN settings
retrieveNeighborInfo	Retrieves neighbor information from the fxCloud
getRFIDInfo	Returns the RFID/NFC information of the fxDevice
setRFIDInfo	Sets the RFID/NFC information of the fxDevice

Extensible API Framework

[0113] This framework allows the developer to create custom APIs and make it accessible for other applications (in the fxDevice or in the fxCloud). In turn, the fxCloud could present these APIs using e.g. REST technologies (via the fxCloud

Northbound Interface) to the developer outside the dSND system. There might be limits put on the APIs exposed through the cloud to avoid potential misuse or security threats. The dRS enforces the security policies defined by the admin (via fxManager). The applications take a role of Client Application (CA) or Server Application Role (SA). The CA and SA could be distributed in the fxDevice or fxCloud. The CA makes requests and SA serves the requests.

[0114] The Extensible APIs could be categorized (as examples) into:

Read-Only Data: this type of APIs allows a CA to read data from SAs without the ability to change or request any particular action from the SAs

Read-Write Data: this type of APIs allows CA application to read data from SAs with the ability to change some of their data but no option for requesting any particular action from SAs;

Procedural: this type of APIs allows CAs to execute a particular procedure in SAs. The rights to change any data still depends on whether the API allows Read-Only Data or Read-Write Data types.

Cloud Management Framework

[0115] The Cloud Management Framework presents a collection of methods enables management of the cloud services and resource. Table 7 highlights some examples of methods/functions that may be available in the Cloud Management Framework.

Table 7: Cloud Management Framework

Method	Description
detectCloudCongestion	Detects congestions on a particular VM
deleteVM	Deletes an active VM permanently
suspendVM	Suspends an active VM but doesn't remove it
activateVM	Activates an already created VM
createVM	Creates a new VM but doesn't activate it

EXAMPLES OF DAPPS

[0116] The dSDN create an end-to-end programming platform and the possibilities of vApps are only limited by the developers' imagination. An example list of potential vApps are presented in Table 8 below.

Table 8 highlights examples of use cases possible by the Distributed Software Defined Network (dSDN)

Use	Description	Framework {Methods} used
1	Distributed SON: For example, the WiFi AP could search for the least crowded channel to minimize the interference.	Wireless {discoverNeighbor, retrieveNeighborInfo, measure nterference, setWirelessConfig, loadBalance}, General Framework, Messaging {sendIntraApp}
2	BS Hot Firmware Upgrade without impact to the basic functions of the BS.	Management {upgradeFirmware}
3	BS Hot infOS Upgrade without impact to the basic functions of the BS. For this function to support full hot upgrade without operational impact, the full platform should have dual processor.	Management {upgradeOS}
4	Secure network---based booting. This allows to keep the code securely in the cloud to avoid tampering by the ODM/CM or Man---in---the-~-Middle attacks.	Management {remoteBoot}
5	Turning on or off APs if nobody is in the office. Sensors in the building send information to fxCloudApp which in turn orders power control of the Aps.	Management {remotePower}
6	Store and forward model for low priority M2M applications where the target traffic is matched and stored in the case of network congestion and forwarded once the network congestion is relieved.	DataPath {matchTraffic, detectCongestion}, Cache {storeForward}
7	Replacing MAC Scheduler	Wireless {defineMacScheduler}
8	Replacing Receiver Algorithms	Wireless {definePHYReceiverAlgorithm}
9	Caching most visited website or video clip in the enterprise	DataPath {identifyTopURL}, Cache {cacheWebSite}
10	The most viewed videos and webcasts are cached in the wireless edge.	DataPath {identifyTopVideos}, Cache {cacheVideo}
11	Local Routing: data and voice sessions between two parties on the same cell are routed within the same cell bypassing the core Network.	DataPath {detectLocalConversation, RouteLocal}
12	Local Routing: data and voice sessions between two parties on the nearby cells are routed locally bypassing the core network.	DataPath {detectConversationDetect, routeLocal}
13	Temporary redirection of a data flow for monitoring and security reasons. In this use case, a particular user's traffic is tracked by redirection to a monitoring station. If user is mobile, such profile of tracking and associated redirection is transferred from fxDevice to fxDevice either directly or via the fxCloud.	DataPath {detectDevice, matchTraffic, redirectTraffic}
14	Power Calendar: On---demand coverage (triggered by passing traffic thresholds in certain cells or by calendaring): Operators need to design their network for peak usage rates at high costs, leaving their network underutilized most of the time.	DataPath {detectCongestion}, Management {remotePower}
15	DOS attack recognition and action could be blocking the user, the app, and/or notifying the user via an SMS message.	Security {setDOSDetect, configureFirewall}, Messaging {sendfxCloud}
16	Applying certain ACLs to the BS. For example, the students in the class can only access Facebook between the breaks and access to Facebook is blocked during the class.	Security {configureFirewall}
17	Forced offloading of some cellular users (users that have attached to the same cell for a while) to WiFi by changing "something" in the cellular connection to force WiFi connection (Heterogeneous).	Wireless {identifyConnectedDevice, forceOffload}
18	Service continuity and anchoring at eNB for WiFi using the same LTE IP address (Heterogeneous).	DataPath {identifyConnectedDevices, assignAddress}
19	Graphic/general processing for special use cases such as City BS	General Frameworks
20	Application filtering/throttling (secondary conditions: time---based, location---based, subscriber---type, none).	DataPath {matchTraffic}, Security {configureFirewall}
21	Local Services: The enterprise user can discover Bonjour or UPnP devices and services (e.g. printer) even when connected to LTE/3G small---cell in the enterprise. In this case, the small cell or fxDevice pro---actively listens to Bonjour and UPnP discovery and advertisement messages (SSDP) and cache the available services until a device request for such information. In the case of Bonjour, fxDevice could listen to Multicast DNS (mDNS) messages sent over cellular connection (LTE/3G) and multicast them on the LAN or WLAN interfaces.	DataPath {matchTraffic, routeLocal}
22	Local Services: The premise---owner (e.g. airport, hotel) can provide ads under the browser for sponsored WiFi or cellular (3G/LTE) access over multi---mode small cell. The premise owner could use this service to advertise special offers or third party ads. This technique uses HTML <script> for example to add special content to the bottom of the page.	DataPath {matchTraffic, addScript}

23	Distributed Content Distribution Network (CDN). In this use case, the fxDevices function as CDN that bring the contact closer to the end users.	DataPath {matchTraffic}, Cache {cacheVideo}
24	In case of national security, the service provider may limit the access to the network so only the law enforcement can use the cellular network. In this case, the admin defines a Target Area (TA) using an fxCloudApp in the fxCloud where the emergency lockdown needs to be applied. The IMSI/MSISDN number of law enforcement mobile devices are sent to the fxDevice in the TA which in turn enforce the policy. The policy may allow the public to just sent SMS while the law enforcement could have full access and priority to the system.	DataPath {matchTraffic, setPriority}, Security {configureFirewall}
25	Emails and web browsing monitored by the cloud services assisted by the agent in the dSDN network. In this case, the fxDevice detects certain traffic (email or web in this case) and redirects them to a cloud service for security cleansing.	DataPath {matchTraffic, redirectTraffic}
26	Analytics pre---analysis: The data collected from M2M devices could be processed (noise could be filtered out) and packaged (compressed) for consumption by cloud services.	DataPath {matchTraffic}, General Framework, Messaging {sendfxCloud}
27	Certain traffic could be marked with QoS DSCP codes for further processing in the network.	DataPath {matchTraffic, markTraffic}
28	Proprietary SP services and applications that run purely between the phone and the BS . For example, the SP may implement a certain application for the law enforcement to get direct feed of surveillance cameras in a target area (TA).	DataPath {matchTraffic}, Security {configureFirewall}, General Framework
29	IP---PBX implementation in the small---cell or WiFi AP for enterprise use. This would allow a simple out of a box solution. The VoIP phones connect to the fxDevice via the LAN connections. The WAN connection could connect to an fxCloudApp for PSTN calls.	DataPath {matchTraffic}, General Framework
30	Network management system can add its own agent/probe to collect and consolidate data and transmit it to its cloud element using any protocol.	Management {gatherStatistics, getSystemInfo, control}, General Framework
31	Application based performance monitoring on the wireless link (number of packets sent in idle mode, retransmit rate…). Such information could be shared with the app developer to optimize its application.	Management {gatherStatistics}, General Framework
32	Seamless network sharing and mergers. This is the case where two Network Operators would like to share or merge their network. Using dSDN's infManager, the network administrators could merge the network administration control. This process may include setting up the desirable default fxApp packages of the network operator.	fxManager Portal Service
33	Following a user to understand where it faces coverage issues or call drops. Once discovered, the system could send a message to the user acknowledging an issue and that the SP is trying to fix this. The information is uploaded to the cloud for further analysis.	Management {gatherStatistics}, General Framework, Messaging {sendSMS}
34	Reporting: This allows the developer to get reports and statistics of the fxDevice traffics, errors, and neighboring environment. The reporting criteria could be set up as: 1) Period, 2) Event based (reports only if a threshold is passed; a threshold could be based on absolute numbers or deltas), 3) One---time (i.e. the information).	Management {setMonitoring}, General Framework
35	Proprietary security protocol between the application in the mobile device and the BS in enterprise deployment. This would allow SP to create enterprise---class LTE for indoor using small cells.	Security {encryptContent, authenticateUser, Integrity, configureFirewall}, DataPath {RouteLocal}, General Framework
36	The femto cell at home that can't scan neighboring cells, gets a list of neighboring cells from the fxCloud or neighbors to broadcast to improve outbound handoffs.	Wireless {discoverNeighbors, retrieveNeighborInfo, setNeighborCells}, Management {retrieveNeighborInfo}
37	IMS---capable femto enabling various SP services to initiate or transferred between home network and mobile devices.	Messaging {sendfxCloud}, General Framework
38	Integrated smart home with multi---mode femto/WiFi router. For example, the application in the smart home router (fxDevice) allows for coordination of home physical security service (such as ADT services). With the fxCloudApp, the user could control the security status of his/her home and remotely control the setting.	Wireless {homeAreaNetworking}, Messaging {fxCloud}, General Framework
39	Home CCTV DVR implementation in an integrated home router. The camera feeds are recorded on the same router caching engine.	Cache {cacheVideo}, Messaging {sendfxCloud}, General Framework
40	Enterprise CCTV DVR implementation in an integrated router with cloud backup. The camera feeds are recorded in the cloud.	Cache {CacheVideo, CacheCloud}, Messaging {fxCloud}, General Framework
41	User traffic separation into various MPLS/LSP (integrating VPN and BS). In this case, users are classified into groups and each group is tunneled to the core network. For example, law enforcement use the encrypted tunnel while the other users use the defaulttunnel.	DataPath {Match, SetupTunnel, RouteTunnel}
42	Dynamic spectrum allocation where a BS borrows unused spectrum from the neighboring BS in case of temporary congestions.	DataPath {detectCongestion}, Wireless {discoverNeighbors, setWirelessConfig}, Management {retrieveNeighborInfo, borrowCarrier}, Messaging {fxCloud}

43	Proxy ANDSF (Access Network Discovery and Control Function) in the BS. When the UE tries to access the ANDSF, the Proxy ANDSF fxDeviceApp in the BS intercept the ANDSF messages and replies on behalf of the ANDSF. This would speed up the WiFi network discovery for example.	DataPath {matchTraffic}, General Framework, Messaging {sendfxCloud}
44	HD Audio calling: audio codecs in BS allows the phones with the right capabilities to communicate with HD Audio quality calling. If one of the mobile devices can't handle the HD quality audio, the BS performs the transcoding of the audio.	DataPath {matchTraffic}, General Framework
45	Enabling mobility on White Space Spectrum: The latest white space database will be downloaded. The mobile devices with special software applications make requests to the BS to retrieve the local available white space frequencies. This would allow the mobile device to handoff seamless between BS using the white space spectrum. The BS would advertise such a capability to the UEs. The secure communication allows peer---to---peer communication between the UE and the BS for certain applications such as White Space Channel lookup or site acquisition tools for field engineering and RF planning.	Messaging {sendfxCloud}, General Framework
46	Site acquisition tool where the technician uses a software tool on his mobile phone to interact with BSs to determine the best place to deploy the new BS. The phone app interests with fxDeviceApps in BSs and fxCloudApp. For example, fxDeviceApp performs air interface quality and gives a priority to traffic generated.	Messaging {sendfxCloud}, General Framework. DataPath {matchTraffic, setPriority}
47	DNS caching at BS to accelerate DNS lookup for subsequent users. This would improve the user experience by reducing response delays.	DataPath {matchTraffic}, General Framework
48	Continuous SLA monitory for certain protocols, applications or general link quality for jitter, delays, bandwidth.	DataPath {matchTraffic}, Management {gatherStatistics}, General Framework
49	Enterprise users can use the small cell deployed in their enterprise free of charge. The DPI engine in fxDevice classifies the traffic and identifies the enterprise private data and they would be routed locally and charging records are generated by the BS (the SP decides how to bill the enterprise user and it may decide to make such usage.	DataPath {matchTraffic, routeLocal}
50	On---premise small---cell aggregation where on fxDevice takes the responsibility of aggregating multiple small---cells on the premise and presenting them as a single BS/Node---B/eNodeB to the core network. In this case the aggregating fxDevice (AfxE) may take responsibility of local radio resource manager (RRM) or self---optimizing network (SON) server. AfxE can also implement and enforce policies concerning local service access on the premise (enterprise) as well as enable seamless handover between cellular technologies and on---premise (enterprise) local area network (LAN) for example using WiFi technology.	General Frameworks, Wireless {discoverNeighbors, retrieveNeighborInfo, setNeighborCells, setWirelessConfig}, Messaging {sendIntraApp}
51	Self adjusting fxCloud compute resources: The fxCloud creates and tears down virtual machines (VMs) based on the traffic load measured by itself or the packet processing and data plane engine. It is also possible that the VM adjustments are made based on the rush hour or pre---configured hours of the day or manually by the administrator.	CloudManagement {removeVM, createVM, detectCloudCongestion, actiavteVM, suspendVM}
52	Core Network Function Virtualization (cNFV) using distributed Software Defined Networking (dSDN): In the case, once an fxDevice is commissioned, its fxDeviceApp0 (i.e. firmware) uses predefined DNS names to discover the rest of the core network (e.g. MME, S---GW, etc.). The core network elements could be created.	General Frameworks, Messaging {sendInterApp, sendIntraApp}, CloudManagement {deleteVM, suspendVM, createVM, activateVM, detectCloudCongestion}
53	Smart display and digital signage as wireless base stations: this use case allows combining the capabilities of a base station and the smart display in shopping malls, airports, and enterprises. There is a already electric power and connectivity for the smart display that the base station function could use.	General Frameworks
54	Tracking a mobile user at base station level even if the UE is in the idle mode. Currently in the idle mode, the MME, SGSN, or VLR/MSC can only know the location of the UE in with a accuracy of LA/RA/URA which is a very large area. The administrator uses the fxCloudApp and requests tracking of the user/UE (the admin may provide target area where the user/UE may be located; e.g. zip code or town name). The fxCloudApp contacts its fxDeviceApp in the fxDevices in the target area (TA) requesting information of a particular IMSI/MSISD/TMSI. Once an fxDevice responds indicating knowledge of the user location, the fxCloudApp directs that serving fxDevice to inform the fxDeviceApp in the next fxDevice of the instructions to track the user and contact fxCloudApp when they user hands off to due to its mobility. fxCloud could create user friendly interfaces and presentations to show for example the direction the user is moving, predict next location of the user, and estimate arrival of the user to a certain location.	DataPath {matchTraffic}, Messaging {sendIntraApp, sendfxCloud}
55	In case of emergency, fxDevices in a target area block all public traffic and only allow law enforcement sessions using specially encryption and authentication between the UE and the fxDevice or fxCloud (depending on the requirements).	DataPath {matchTraffic, setPriority}, Security {configureFirewall, encryptTraffic, authenticateUser}, General Framework

56	SON triggered by the data traffic consumption. In this case, the mobile cell configuration is adjusted based on the current traffic of the cell. It could for example force handoff some users (high users or users moving fast) to neighboring cells.	DataPath {identifyTopDevices}, Wireless {forceHandoff}
57	Time based QoS and policy. In this use case, the infManager pushes certain policies in target area (TA). Such polices could be turning on extra capacity (frequency channels) or QoS policies and traffic prioritization on the WAN like.	DataPath {matchTraffic, setPriority}, Wireless {discoverNeighbors, setWirelessConfig}
58	Fast moving users detection: in this use case, the application in the BS measures the speed of the user (based on the time was handed off to this cell until it was handed over to the next cell). This information could be used by the fxDevice or fxCloud to force handoff the mobile user to a larger cell to reduce handoff rates.	General Frameworks, Wireless {identifyTopMovers, forceHandoff}
59	Emergency broadcast of information and live camera feeds. In case of emergency, the enterprise network administrator temporarily block all traffic and only allow emergency related traffic across the target area in the enterprise network. For example, the network admin broadcasts the camera feeds and alerts over the WiFi access points using multicast IP techniques. The client devices and digital sinages can listen to that particular multicast and show the camera feeds and emergency alerts.	DataPath {matchTraffic, setPriority}, Security {configureFirewall}, General Framework
60	Dynamic advertising in shopping malls. The shopper would use an app from the shopping mall. When the shopper brings up or refreshes the app, the dSDN allows the shopping mall to pinpoint the exact indoor/outdoor location of the user (e.g. the shop the shopper is in) and send special coupon and ads for that store to the shopper.	General Frameworks, Wireless {positionDevice}, Messaging {sendIntraApp, sendfxCloud}, Security {configureFirewall}, DataPath {matchTraffic, redirectTraffic}
61	Smart tour guide. The tourist would use an app from the tourism board or museum. When the user brings up or refreshes the app, the dSDN allows to pinpoint the exact location of the tourist (e.g. the painting he/she is looking at) and send tour guide information (e.g. audio, video, hypertext). dSDN allows to localize the positioning.	General Frameworks, Wireless {positionDevice}, Messaging {sendIntraApp, sendfxCloud}, Security {configureFirewall}, DataPath {matchTraffic, redirectTraffic}
62	General hotspot landing page	DataPath {matchTraffic, redirectTraffic}, Security {authenticateUser}
63	Proprietary wireless mesh implementation	Wireless {discoverNeighbor, retrieveNeighborInfo, measureInterference, setWirelessConfig}, General Framework, Messaging {sendIntraApp}
64	Power and energy consumption map of the network. A real---time fxCloudApp pulls the power consumption details from each fxDevice periodicaly or on demand. The pulled data then are combined with the location information and correlated into a map to present a viewable consumption map.	Management {getfxDeviceLocation, getPowerConsumptionRate}
65	Network deployment optimization. This application allows network operator to get advice for best optimal reconfiguration and/or redeployment of the network. For example, the network admin could get suggestion that based on the power consumptions and coverage perceived and spectrum utilization, it might be better to replace a particular group of smaller cells with a single macro---cell. This app could also pull information from larger OEMs based on the subject deployment scenario (the OEMs either provide this information statically to the tool or provide network APIs for use by this app e.g. using REST protocol).	Management {getfxDeviceLocation, getPowerConsumptionRate, gatherStatistics}
66	High availability. This app allows two or more fxDevice to form a redundancy cluster where they participate in statueful redundancy and load---balancing.	Messaging {sendIntraApp}, General Framework
67	Bandwidth Bursting. This feature enables the dynamic adjustment of backhaul or WAN link bandwidth as the demands change in the enterprise or public wireless deployments. In this case, the fxDeviceApp in the fxDevice monitors the WAN link utilization, once a preset threshold percentage has reached, it messages its sister fxCloudApp which in turn would send a request to the fxDeviceApp to increase or decrease the WAN bandwidth. If additional backend reconfiguration is needed, the fxCloudApp performs those additional changes prior to informing the fxDeviceApp of the bandwidth.	Management {getStatistics, configureWAN}
68	Wireless link quality measurement by the small---cell or WiFi AP: The wireless SoC in the small---cell or WiFi AP continuously monitors the link quality for power adjustment and handover reasons. Such information could be exposed to the app developers to create cell---level analytics and reports without the need to have test--- drives or field testing of service quality.	Management {gatherStatistics}, General Framework
69	Data Path Consolidation: An application on the fxDevice discovers identical data feeds from a cloud server to two or more users. The fxDeviceApp in the fxDevice can discover this potential duplicate flows at the session establishment (via a proxy function) and it would consolidate those sessions into one on the uplink towards the cloud server. A good example of this use case is the web---based desktop sharing where different many users in the same office site get the same feed from the cloud server.	FastPath {detectIdenticalFlows, aggregateFlows}

[0117] The following references are herein specifically incorporated by reference in their entirety into this disclosure:

[1] 3GPP TS 23.002, "Network Architecture";

[2] 3GPP TS 23.402, "Architecture enhancements for non-3GPP accesses";

[3] 3GPP TS 23.401, "General Packet Radio Service (GPRS) enhancements for Evolved Universal Terrestrial Radio Access Network (E-UTRAN) access";

[4] Open Base Station Architecture Initiative (OBSAI); and

[5] SPDY Protocol (http://datatracker.ietf.org/doc/draft-mbelshe-httpbis-spdy/).

CLAIMS

1. A system for processing data packets in a network, the system comprising:

a programmable network device hosting a plurality of first network applications;

a programmable cloud device hosting a plurality of second network applications;

wherein at least one of the plurality of first network applications in the programmable network device and at least one of the plurality of second network applications in the programmable cloud device are in secure communication with each other to form a distributed application;

the programmable network device and programmable cloud device are each powered by a sandboxing operating system which facilitates deployment of the plurality of first and second network applications and facilitates upgrades of the first and second network applications with substantially no interruption to operation of the programmable network device and programmable cloud device;

wherein the programmable network device verifies authenticity of the upgrades to the plurality of first network applications and the programmable cloud device verifies authenticity of the upgrades to the plurality of second network applications and wherein the verification is based on unique security keys associated with each of the plurality of first and second network applications;

an application repository storing distributed applications which have been tested for installation in the programmable network device and programmable cloud device; and

an application management portal coupled to the programmable network device, programmable cloud device and the application repository, wherein the application management portal manages usage of the distributed applications on the programmable network device and programmable cloud device.

2. The system of claim 1, wherein each of the programmable network device and programmable cloud device include an access network interface unit to send and receive communications and a processor with a memory associated with the network interface unit.

3. The system of claim 1, wherein the at least one of the first network applications is responsible for a plurality of functional capabilities of the programmable network device and is capable of at least one of the group consisting of: updating the firmware of the programmable network device; updating default communication protocols of the programmable network device; initializing programmable network device settings; boot loading the programmable network device; providing security digital certificates; providing operating system (OS) and kernel upgrades; and upgrading and commissioning agents for upgrades of the at least one of the first network applications.

4. The system of claim 1, wherein at least one of the second network applications is responsible for a plurality of functional capabilities of the programmable cloud device and is capable of at least one of the group consisting of: upgrading and commissioning agents for upgrades of the at least one of the second network applications and related procedures; hypervisor upgrades; virtual machine and isolated execution environment lifecycle management; security digital certificate management; operating system (OS) and kernel upgrades; and default communication protocols.

5. The system of claim 1, wherein the programmable network device is a Long Term Evolution (LTE) evolved NodeB (eNB) and the programmable cloud device hosts LTE core network functions in separate virtual machines, the network functions consisting of: Mobility Management Entity (MME), Serving Gateway (S-GW), and Packet Gateway (P-GW).

6. The system of claim 1, wherein the programmable network device and programmable cloud device further comprise:

a virtual fabric which provides a secure communication layer for at the least one of the plurality of first network applications and the at least one of the plurality of second network applications.

7. The system of claim 1, further comprising:

a second programmable network device which includes the at least one of the

plurality of first network applications which is in the first programmable network device.

8. The system of claim 1, wherein the programmable network device and programmable cloud device further comprise:

a distributed resource service (DRS) which controls access to a plurality of resources by the plurality of first network applications and the plurality of the second network applications upon receiving instructions from the application management portal.

9. The system of claim 1, wherein the plurality of resources include at least one of a group consisting of: a firewall; data and statistics; storage; compute; load evaluator; general settings; routing engine; virtual machine master controller; power controller; and wireless engine.

10. The system of claim 1, wherein the programmable network device and programmable cloud device further comprise:

a distributed resource service (DRS) which is capable of providing at least one service from a group consisting of: exposing application programming interfaces (APIs) to other applications; configuring and managing platform resources; policy enforcement and authorization of applications access to platform resource and other application's APIs; and policy conflict resolution.

11. The system of claim 1, wherein the programmable network device and programmable cloud device further comprise:

a distributed content service wherein contents generated by the at least one of the plurality of first network applications may be shared with the at least one of a plurality of second network applications.

12. The system of claim 1, wherein the programmable network device and programmable cloud device further comprise:

a distributed notification service wherein notice of a particular event is sent from at least one of the plurality of first network applications to at least one of the plurality of

second network applications.

13. The system of claim 10, wherein the DRS further includes a load controller; and wherein the load controller is adapted to monitor loads on at least one of the plurality of first network applications and at least one of the plurality of second network applications and effect change in accordance with thresholds received from the application management portal.

14. The system of claim 1, wherein the programmable network device, at least one of the plurality of first network applications, the programmable cloud device, and at least one of the plurality of second network applications each have unique identities.

15. A system for processing data packets, the system comprising:

a programmable network device processing data flows hosting at least one of a plurality of first network applications;

a programmable cloud device having a plurality of virtual machines wherein at least one of the virtual machines hosts at least one of a plurality of second network applications;

wherein the at least one of the plurality of first and the at least one of the plurality of second network applications are in secure communication to form a distributed application;

the programmable network device and programmable cloud device are each powered by a sandboxing operation system which facilitates deployment of the plurality of first and second network applications and facilitates upgrade of the plurality of first and second network applications with substantially no interruption to operation of the programmable network device and programmable cloud device;

wherein the programmable network device verifies authenticity of the upgrades to the plurality of first network applications and the programmable cloud device verifies the authenticity of the upgrades to the plurality of second network applications and wherein the verification is based on unique security keys associated with each of the plurality of first and second network applications;

an application repository storing distributed applications which have been tested

for installation in the programmable network device and programmable cloud device; and

an application management portal coupled to the programmable network device, programmable cloud device and the application repository, wherein the application management portal manages provisioning, usage and de-provisioning of the distributed applications on the programmable network device and programmable cloud device.

16. The system of claim 15, wherein the programmable network device is a Long Term Evolution (LTE) evolved NodeB (eNB) and the programmable cloud device hosts LTE core network functions in separate virtual machines, the network functions consisting of: Mobility Management Entity (MME), Serving Gateway (S-GW), and Packet Gateway (P-GW).

17. A system for processing data packets in a network, the system comprising:-

a programmable network device processing data flows, hosting at least one of a plurality of first network applications;

a programmable cloud device partitioned into a plurality of zones, wherein at least one of the plurality of zones hosts at least one of a plurality of ~~first~~ second network applications;

wherein the at least one of the plurality of first network applications and at least one of the plurality of second network applications are in secure communication to form a distributed application;

the programmable network device and programmable cloud device are each powered by a sandboxing operation system which facilitates deployment of the plurality of first and second network applications and facilitates upgrade of the plurality of first and second network applications with substantially no interruption to operation of the programmable network device and programmable cloud device;

wherein the programmable network device verifies authenticity and integrity of upgrades to the plurality of first network applications and the programmable cloud device verifies the authenticity of the upgrades to the plurality of second network applications and wherein the verification is based on unique security keys associated with each of the plurality of first and second network applications;

an application repository storing distributed applications which have been tested for installation in the programmable network device and programmable cloud device; and

an application management portal coupled to the programmable network device, programmable cloud device and the application repository, wherein the application management portal manages usage of the distributed applications on the programmable network device and programmable cloud device.

18. The system of claim 17, wherein the programmable network device is a Long Term Evolution (LTE) evolved NodeB (eNB) and the programmable cloud device hosts LTE core network functions in separate virtual machines, the network functions consisting of: Mobility Management Entity (MME), Serving Gateway (S-GW), and Packet Gateway (P-GW).

ABSTRACT

The Distributed Software Defined Network (dSDN) disclosed herein is an end-to-end architecture that enables secure and flexible programmability across a network with full lifecycle management of services and infrastructure applications (fxDeviceApp). The dSDN also harmonizes application deployment across the network independent of the hardware vendor. As a result, the dSDN simplifies the network deployment lifecycle from concept to design to implementation to decommissioning.

Exhibit 1002
Microsoft Corporation v. Edge Networking Systems, LLC
176