US 20140317293A1

(19) United States

(12) Patent Application Publication

SHATZKAMER

(10) Pub. No.: US 2014/0317293 A1

(43) Pub. Date: Oct. 23, 2014

(54) **APP STORE PORTAL PROVIDING POINT-AND-CLICK DEPLOYMENT OF THIRD-PARTY VIRTUALIZED NETWORK FUNCTIONS**

(71) Applicant: **CISCO TECHNOLOGY, INC.**, San Jose, CA (US)

(72) Inventor: **Kevin SHATZKAMER**, Hingham, MA (US)

(73) Assignee: **CISCO TECHNOLOGY, INC.**, San Jose, CA (US)

(21) Appl. No.: **14/245,193**

(22) Filed: **Apr. 4, 2014**

Related U.S. Application Data

(60) Provisional application No. 61/814,685, filed on Apr. 22, 2013.

Publication Classification

(51) **Int. Cl.**
H04L 12/24 (2006.01)

(52) **U.S. Cl.**
CPC *H04L 41/04* (2013.01)
USPC **709/226**

(57) **ABSTRACT**

In one embodiment, a method comprises receiving by an apparatus, via a wide area network, a request for deployment of a selected one of available virtualized network services advertised by the apparatus, the request identifying a host service provider to deploy the one virtualized network service; identifying, by the apparatus, virtualized network functions required by the host service provider for implementation of the one virtualized network service, each virtualized network function having a corresponding and distinct virtualized container specifying attributes for defining execution of the corresponding virtualized network function within one or more physical machines of the host service provider; and sending to the host service provider, by the apparatus, a service container specifying instructions for deploying the one virtualized network service, the service container including instructions for deploying the virtualized network functions as interdependent for implementation of the one virtualized network service by the host service provider.

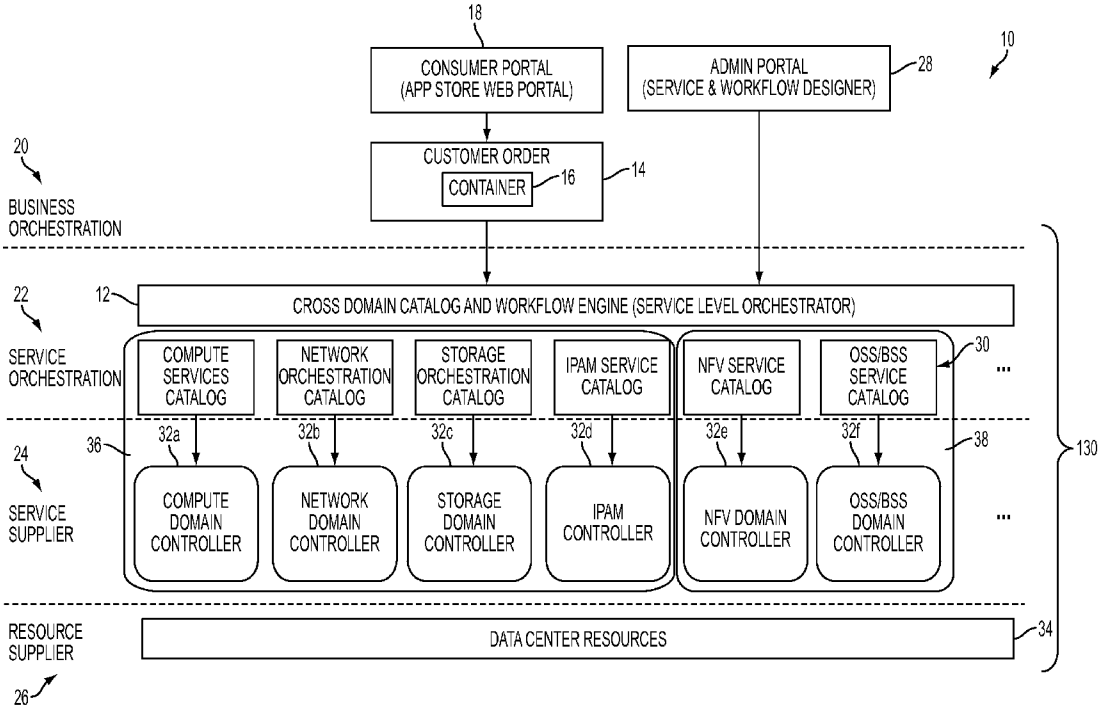

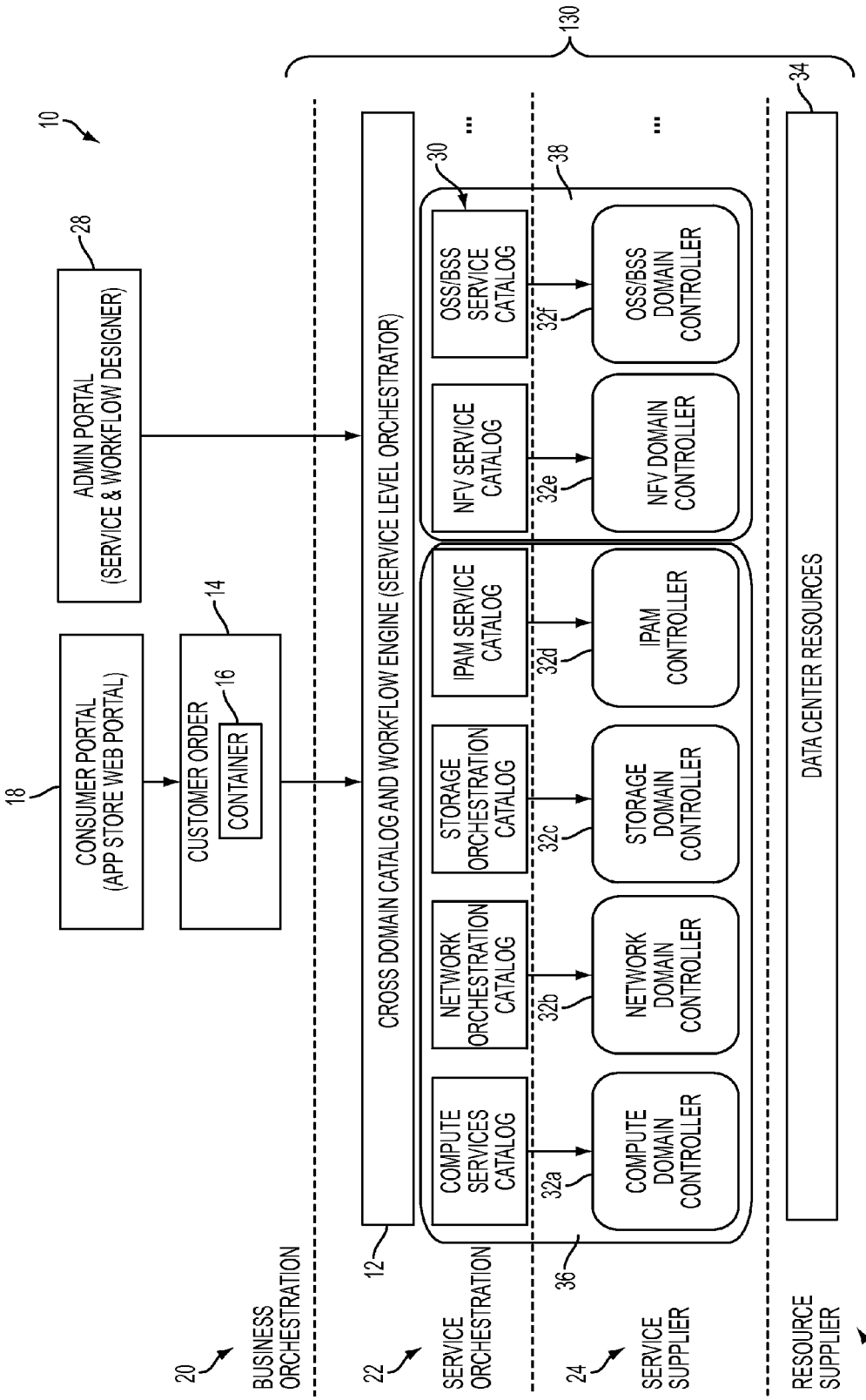
10
ADMIN PORTAL
(SERVICE & WORKFLOW DESIGNER)
28
CONSUMER PORTAL
(APP STORE WEB PORTAL)
18
CUSTOMER ORDER
CONTAINER
16
14
CROSS DOMAIN CATALOG AND WORKFLOW ENGINE (SERVICE LEVEL ORCHESTRATOR)
12
130
COMPUTE SERVICES CATALOG
NETWORK ORCHESTRATION CATALOG
STORAGE ORCHESTRATION CATALOG
IPAM SERVICE CATALOG
NFV SERVICE CATALOG
OSS/BSS SERVICE CATALOG
30
COMPUTE DOMAIN CONTROLLER
NETWORK DOMAIN CONTROLLER
STORAGE DOMAIN CONTROLLER
IPAM CONTROLLER
NFV DOMAIN CONTROLLER
OSS/BSS DOMAIN CONTROLLER
32a
32b
32c
32d
32e
32f
36
38
DATA CENTER RESOURCES
34
BUSINESS ORCHESTRATION
20
SERVICE ORCHESTRATION
22
SERVICE SUPPLIER
24
RESOURCE SUPPLIER
26

FIG. 1

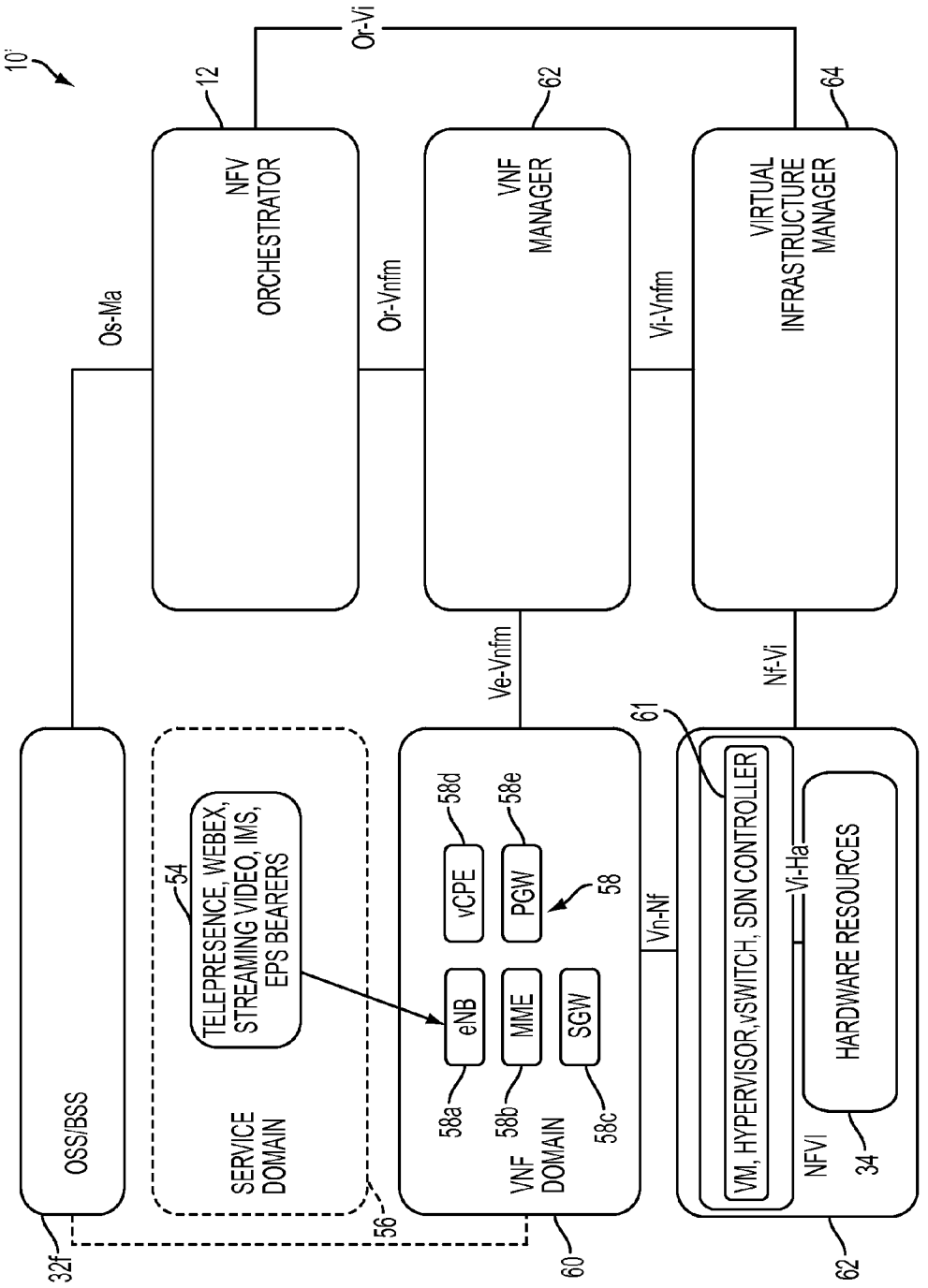
10'
12
NFV ORCHESTRATOR
Or-Vi
62
VNF MANAGER
64
VIRTUAL INFRASTRUCTURE MANAGER
Os-Ma
Or-Vnfm
Vi-Vnfm
Ve-Vnfm
Nf-Vi
61
OSS/BSS
32f
54
TELEPRESENCE, WEBEX, STREAMING VIDEO, IMS, EPS BEARERS
SERVICE DOMAIN
56
58d
58e
vCPE
PGW
58
eNB
MME
SGW
58a
58b
58c
VNF DOMAIN
60
Vn-Nf
VM, HYPERVISOR,vSWITCH, SDN CONTROLLER
Vi-Ha
HARDWARE RESOURCES
NFVI
34
62

FIG. 2

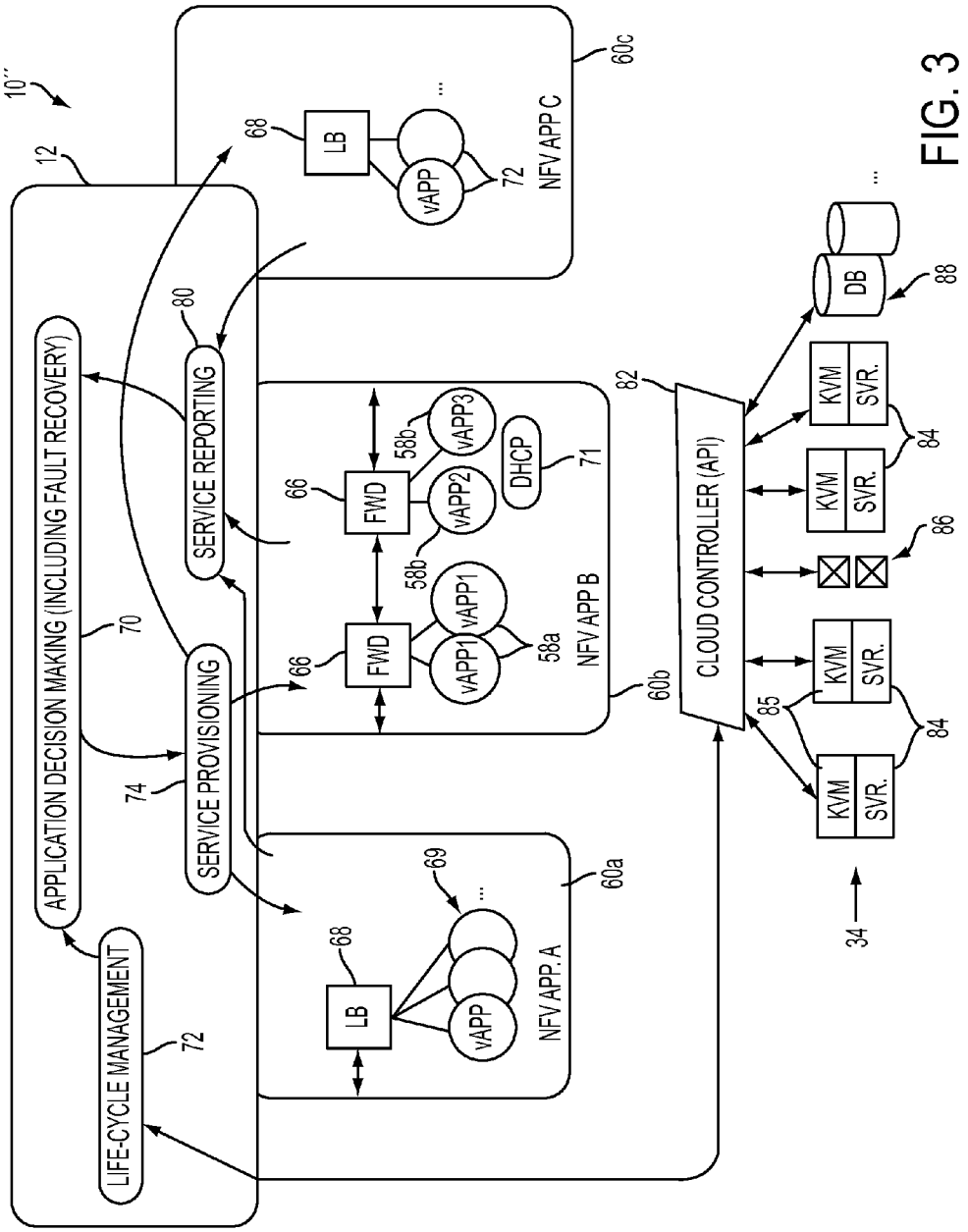
10''
12
APPLICATION DECISION MAKING (INCLUDING FAULT RECOVERY)
70
LIFE-CYCLE MANAGEMENT
72
74
SERVICE PROVISIONING
80
SERVICE REPORTING
68
LB
69
vAPP
NFV APP. A
60a
66
FWD
58a
vAPP1
58b
vAPP2
vAPP3
DHCP
71
NFV APP B
60b
72
NFV APP C
60c
82
CLOUD CONTROLLER (API)
85
KVM
SVR.
84
86
DB
88
34

FIG. 3

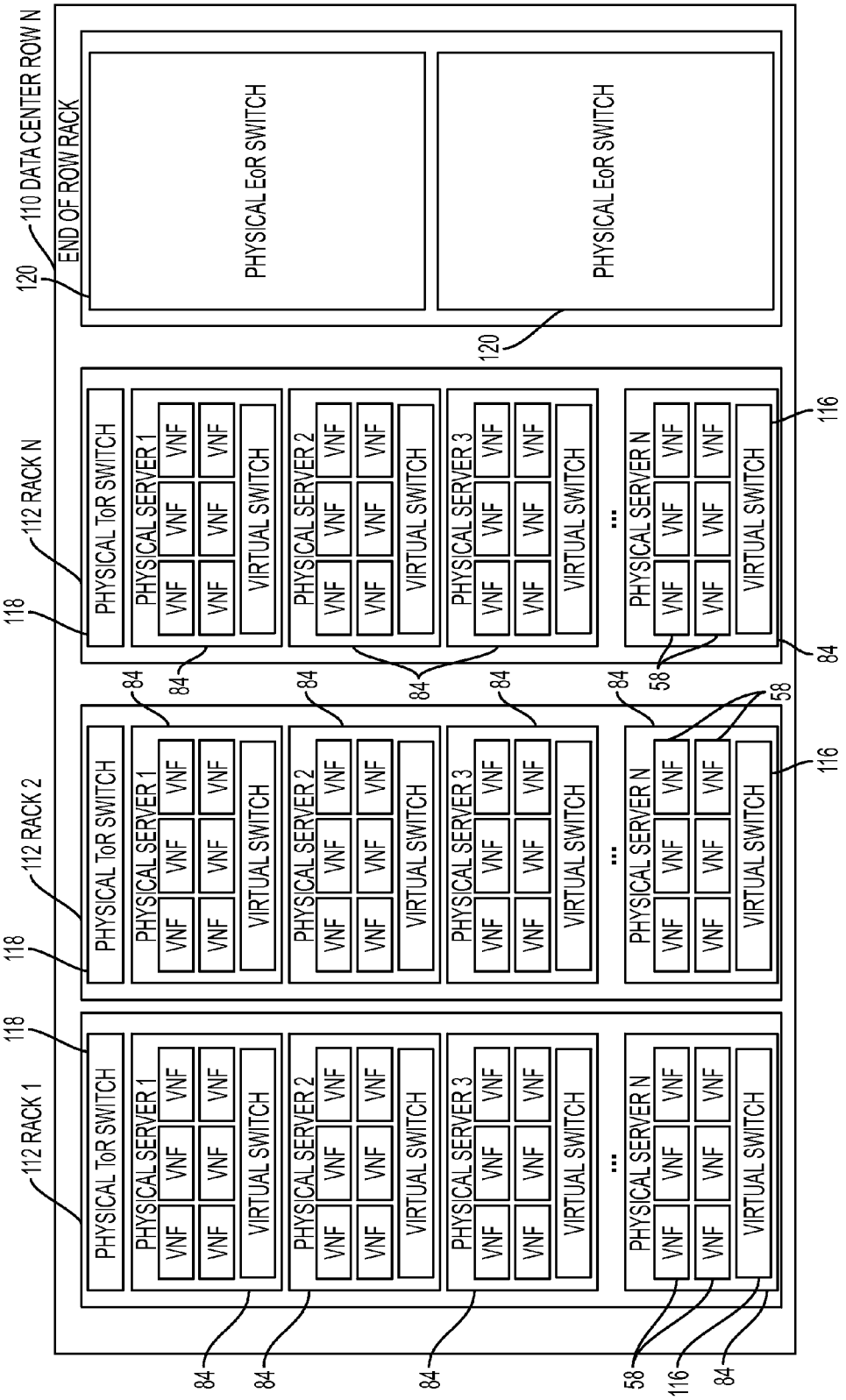
110 DATA CENTER ROW N
END OF ROW RACK
120
PHYSICAL EoR SWITCH
PHYSICAL EoR SWITCH
120
112 RACK N
118
PHYSICAL ToR SWITCH
PHYSICAL SERVER 1
PHYSICAL SERVER 2
PHYSICAL SERVER 3
PHYSICAL SERVER N
VNF
VIRTUAL SWITCH
84
58
116
112 RACK 2
112 RACK 1

FIG. 4

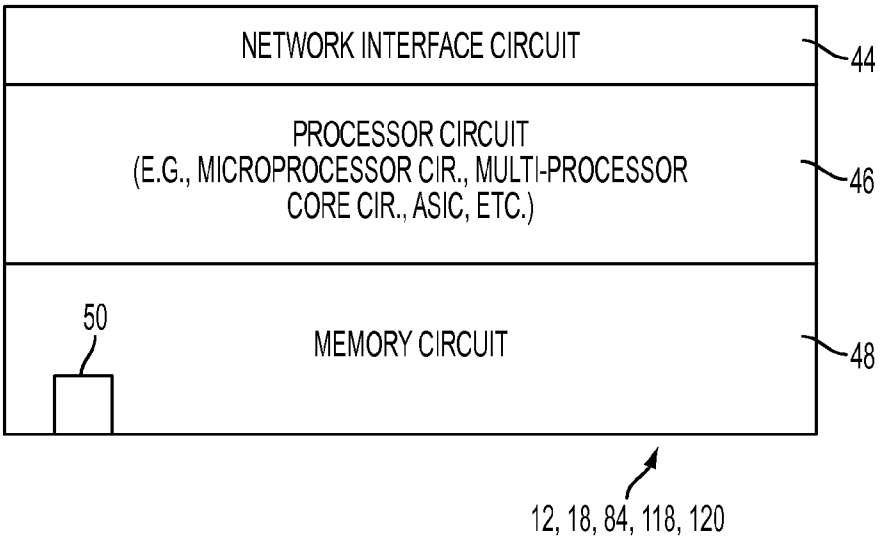
NETWORK INTERFACE CIRCUIT
44
PROCESSOR CIRCUIT
(E.G., MICROPROCESSOR CIR., MULTI-PROCESSOR
CORE CIR., ASIC, ETC.)
46
50
MEMORY CIRCUIT
48
12, 18, 84, 118, 120

FIG. 5

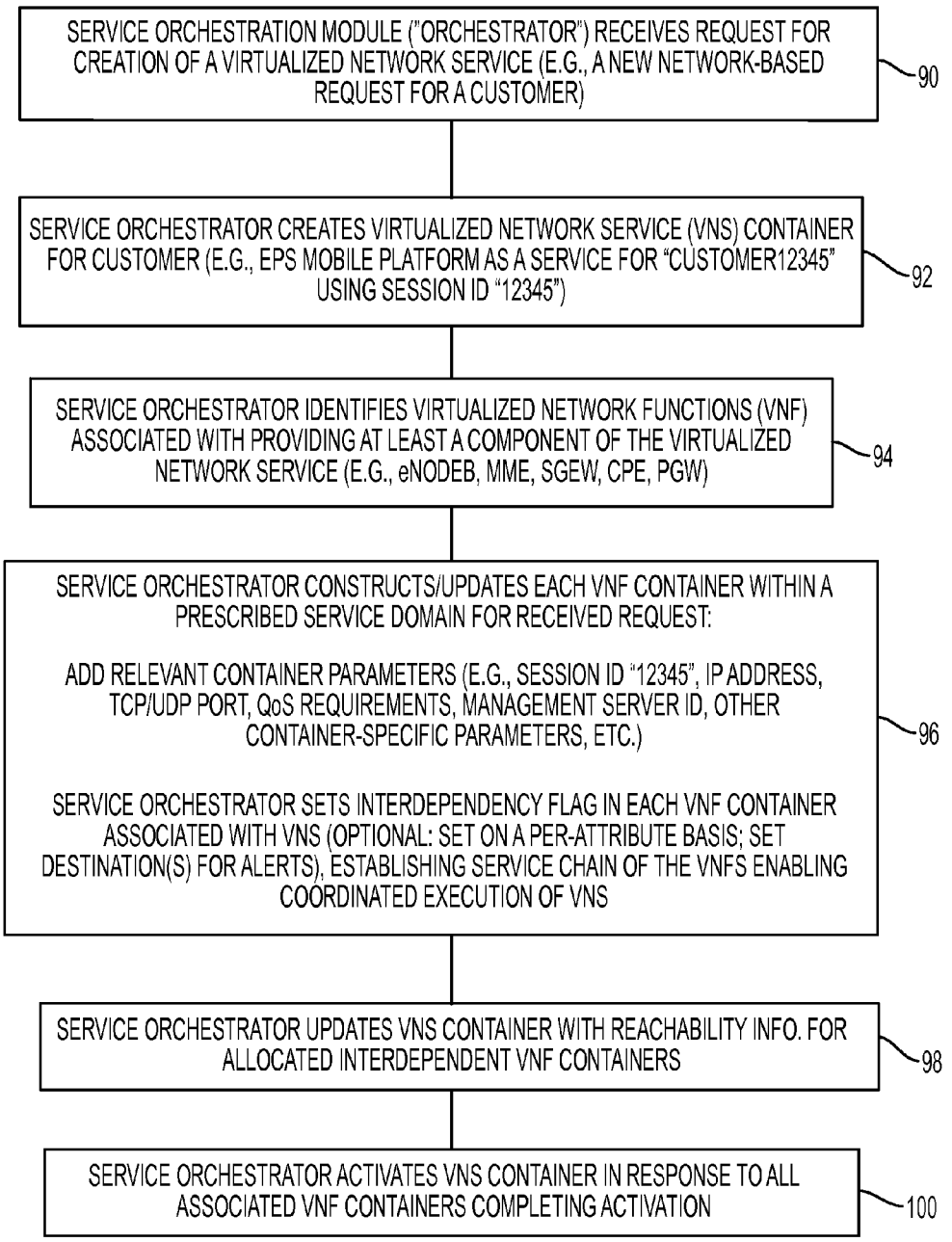
SERVICE ORCHESTRATION MODULE ("ORCHESTRATOR") RECEIVES REQUEST FOR CREATION OF A VIRTUALIZED NETWORK SERVICE (E.G., A NEW NETWORK-BASED REQUEST FOR A CUSTOMER)
90
SERVICE ORCHESTRATOR CREATES VIRTUALIZED NETWORK SERVICE (VNS) CONTAINER FOR CUSTOMER (E.G., EPS MOBILE PLATFORM AS A SERVICE FOR "CUSTOMER12345" USING SESSION ID "12345")
92
SERVICE ORCHESTRATOR IDENTIFIES VIRTUALIZED NETWORK FUNCTIONS (VNF) ASSOCIATED WITH PROVIDING AT LEAST A COMPONENT OF THE VIRTUALIZED NETWORK SERVICE (E.G., eNODEB, MME, SGEW, CPE, PGW)
94
SERVICE ORCHESTRATOR CONSTRUCTS/UPDATES EACH VNF CONTAINER WITHIN A PRESCRIBED SERVICE DOMAIN FOR RECEIVED REQUEST:
ADD RELEVANT CONTAINER PARAMETERS (E.G., SESSION ID "12345", IP ADDRESS, TCP/UDP PORT, QoS REQUIREMENTS, MANAGEMENT SERVER ID, OTHER CONTAINER-SPECIFIC PARAMETERS, ETC.)
SERVICE ORCHESTRATOR SETS INTERDEPENDENCY FLAG IN EACH VNF CONTAINER ASSOCIATED WITH VNS (OPTIONAL: SET ON A PER-ATTRIBUTE BASIS; SET DESTINATION(S) FOR ALERTS), ESTABLISHING SERVICE CHAIN OF THE VNFS ENABLING COORDINATED EXECUTION OF VNS
96
SERVICE ORCHESTRATOR UPDATES VNS CONTAINER WITH REACHABILITY INFO. FOR ALLOCATED INTERDEPENDENT VNF CONTAINERS
98
SERVICE ORCHESTRATOR ACTIVATES VNS CONTAINER IN RESPONSE TO ALL ASSOCIATED VNF CONTAINERS COMPLETING ACTIVATION
100

FIG. 6A

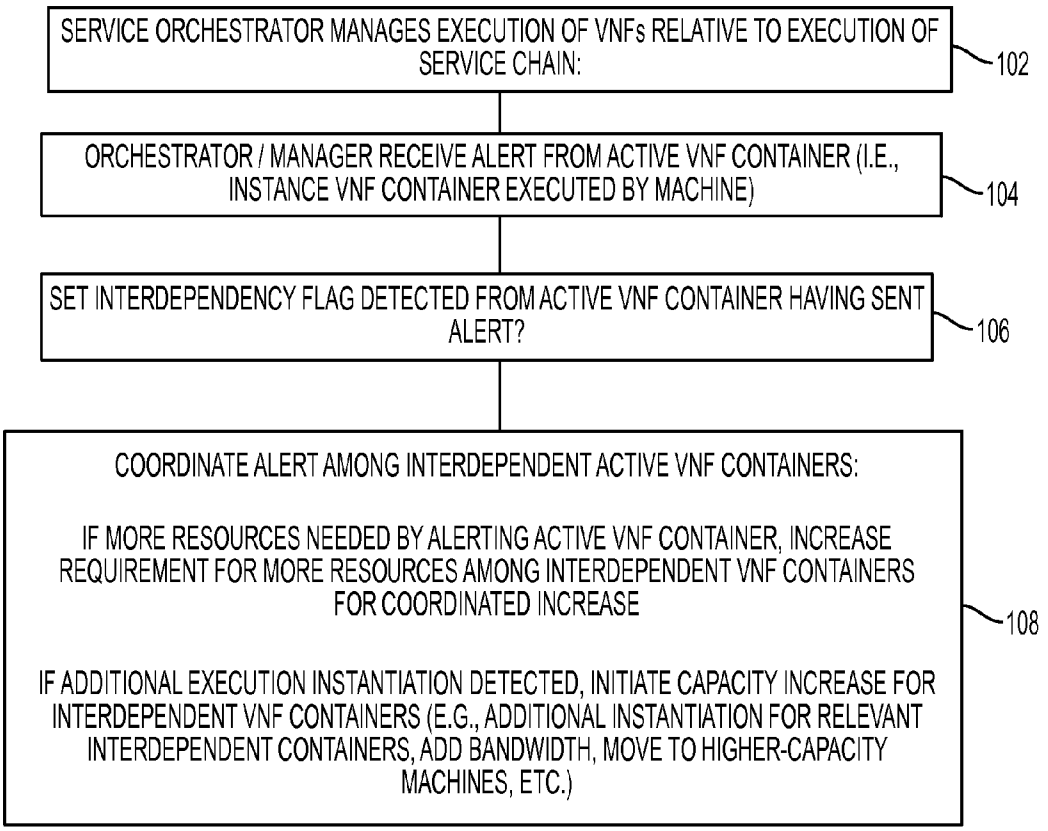
SERVICE ORCHESTRATOR MANAGES EXECUTION OF VNFs RELATIVE TO EXECUTION OF SERVICE CHAIN:
102
ORCHESTRATOR / MANAGER RECEIVE ALERT FROM ACTIVE VNF CONTAINER (I.E., INSTANCE VNF CONTAINER EXECUTED BY MACHINE)
104
SET INTERDEPENDENCY FLAG DETECTED FROM ACTIVE VNF CONTAINER HAVING SENT ALERT?
106
COORDINATE ALERT AMONG INTERDEPENDENT ACTIVE VNF CONTAINERS:
IF MORE RESOURCES NEEDED BY ALERTING ACTIVE VNF CONTAINER, INCREASE REQUIREMENT FOR MORE RESOURCES AMONG INTERDEPENDENT VNF CONTAINERS FOR COORDINATED INCREASE
IF ADDITIONAL EXECUTION INSTANTIATION DETECTED, INITIATE CAPACITY INCREASE FOR INTERDEPENDENT VNF CONTAINERS (E.G., ADDITIONAL INSTANTIATION FOR RELEVANT INTERDEPENDENT CONTAINERS, ADD BANDWIDTH, MOVE TO HIGHER-CAPACITY MACHINES, ETC.)
108

FIG. 6B

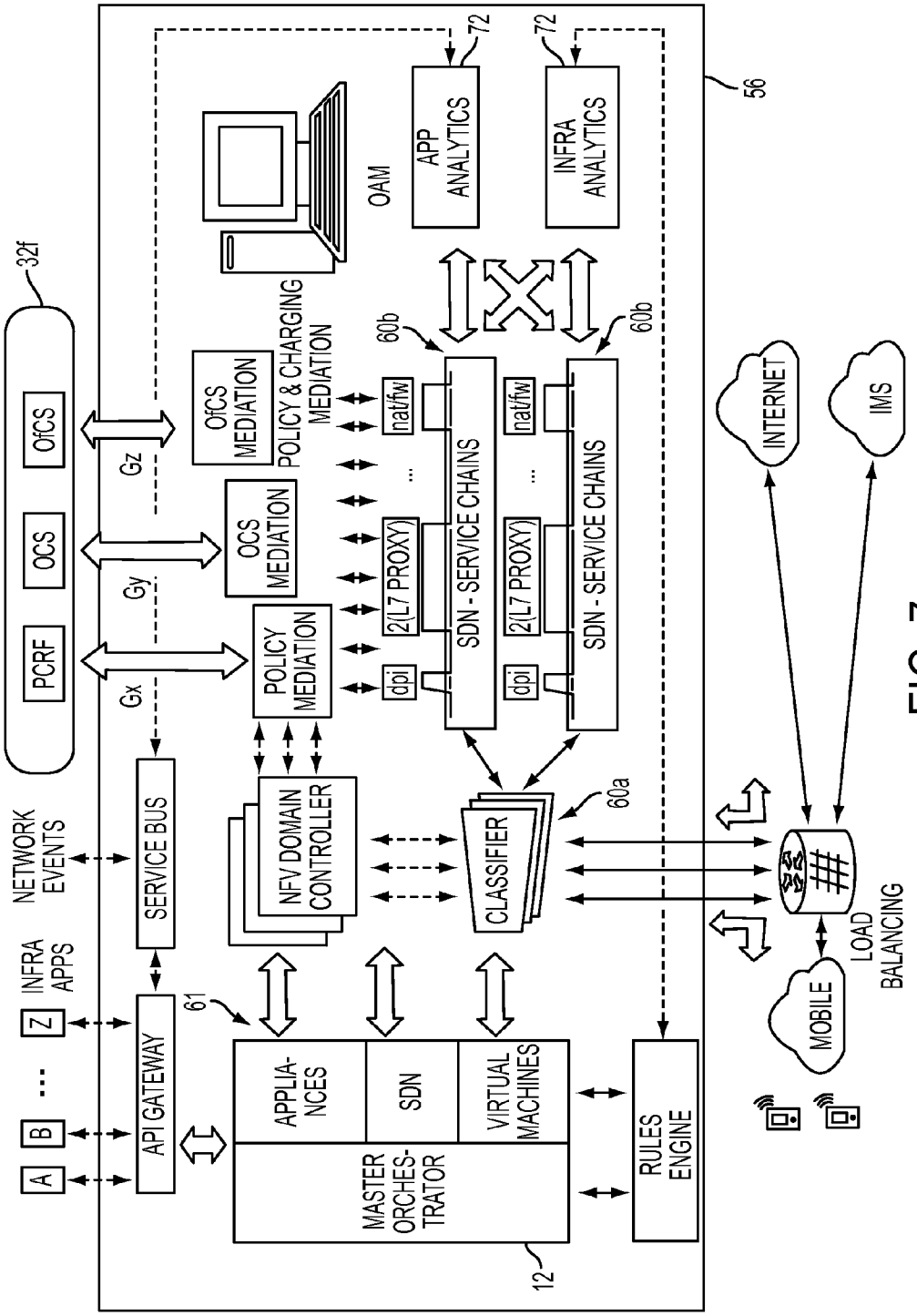
32f
PCRF
OCS
OfCS
Gx
Gy
Gz
OfCS MEDIATION
OCS MEDIATION
POLICY MEDIATION
POLICY & CHARGING MEDIATION
OAM
APP ANALYTICS
INFRA ANALYTICS
72
72
56
60b
60b
nat/fw
nat/fw
2(L7 PROXY)
2(L7 PROXY)
dpi
dpi
SDN - SERVICE CHAINS
SDN - SERVICE CHAINS
INTERNET
IMS
NETWORK EVENTS
SERVICE BUS
NFV DOMAIN CONTROLLER
CLASSIFIER
60a
INFRA APPS
Z
...
B
A
API GATEWAY
61
APPLIA-NCES
SDN
VIRTUAL MACHINES
MASTER ORCHES-TRATOR
12
RULES ENGINE
MOBILE
LOAD BALANCING

FIG. 7

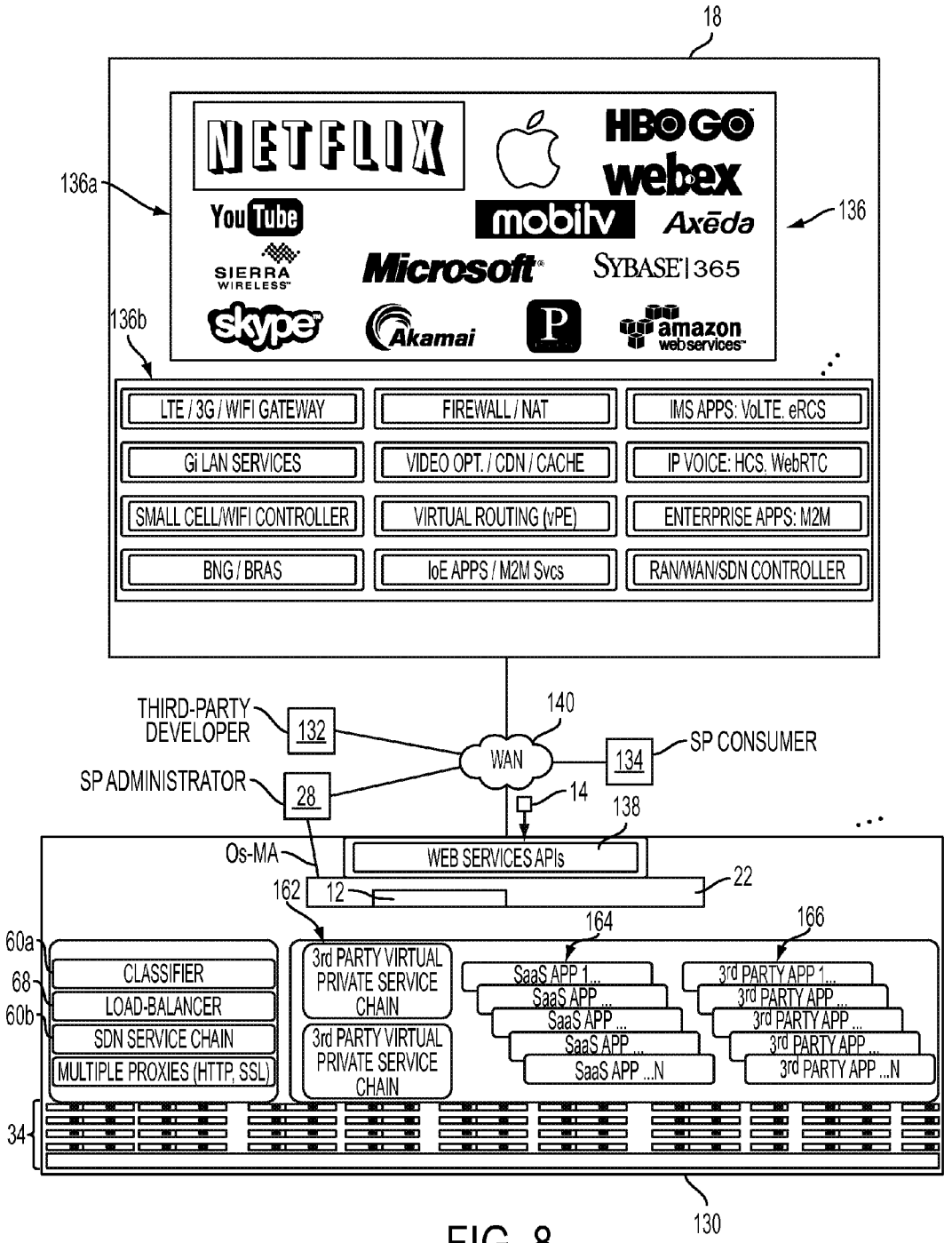
18
136a
136
136b
NETFLIX
HBO GO
webex
YouTube
mobitv
Axēda
SIERRA WIRELESS
Microsoft
SYBASE 365
skype
Akamai
amazon webservices
LTE / 3G / WIFI GATEWAY
FIREWALL / NAT
IMS APPS: VoLTE, eRCS
Gi LAN SERVICES
VIDEO OPT. / CDN / CACHE
IP VOICE: HCS, WebRTC
SMALL CELL/WIFI CONTROLLER
VIRTUAL ROUTING (vPE)
ENTERPRISE APPS: M2M
BNG / BRAS
IoE APPS / M2M Svcs
RAN/WAN/SDN CONTROLLER
THIRD-PARTY DEVELOPER
132
140
WAN
134
SP CONSUMER
SP ADMINISTRATOR
28
14
138
Os-MA
WEB SERVICES APIs
162
12
22
164
166
60a
68
60b
CLASSIFIER
LOAD-BALANCER
SDN SERVICE CHAIN
MULTIPLE PROXIES (HTTP, SSL)
3rd PARTY VIRTUAL PRIVATE SERVICE CHAIN
3rd PARTY VIRTUAL PRIVATE SERVICE CHAIN
SaaS APP 1...
SaaS APP ...
SaaS APP ...
SaaS APP ...
SaaS APP ...N
3rd PARTY APP 1...
3rd PARTY APP ...
3rd PARTY APP ...
3rd PARTY APP ...
3rd PARTY APP ...N
34
130

FIG. 8

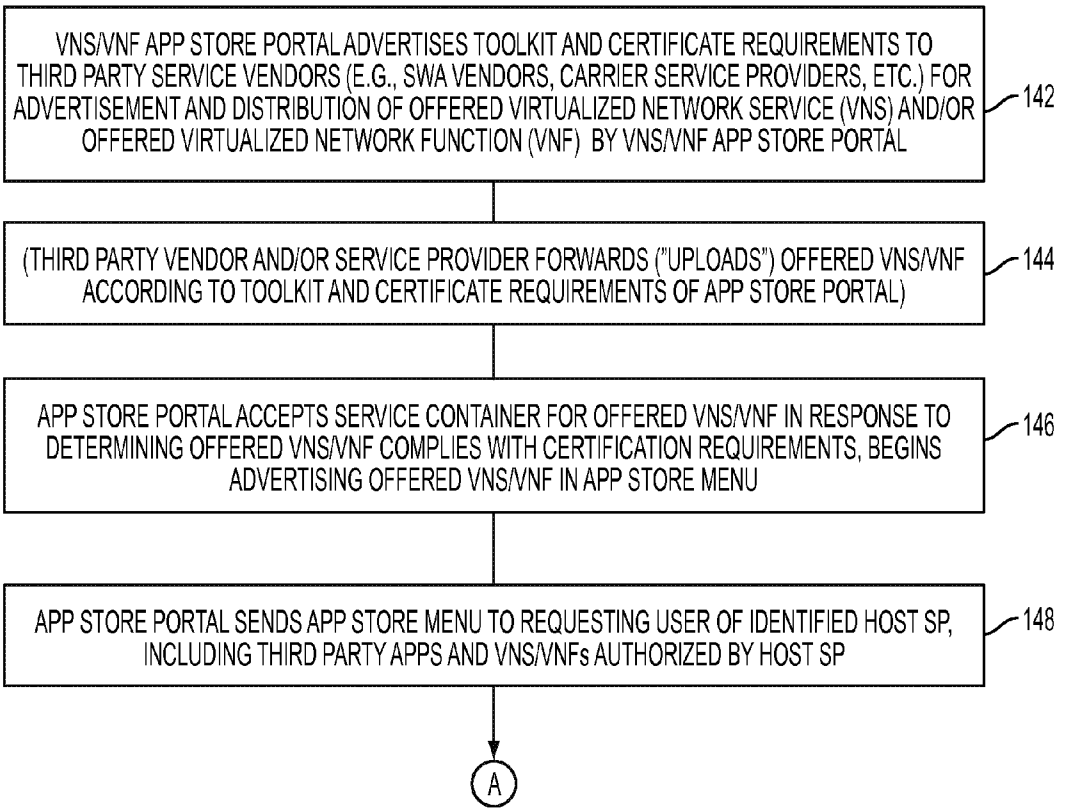
VNS/VNF APP STORE PORTAL ADVERTISES TOOLKIT AND CERTIFICATE REQUIREMENTS TO THIRD PARTY SERVICE VENDORS (E.G., SWA VENDORS, CARRIER SERVICE PROVIDERS, ETC.) FOR ADVERTISEMENT AND DISTRIBUTION OF OFFERED VIRTUALIZED NETWORK SERVICE (VNS) AND/OR OFFERED VIRTUALIZED NETWORK FUNCTION (VNF) BY VNS/VNF APP STORE PORTAL
142
(THIRD PARTY VENDOR AND/OR SERVICE PROVIDER FORWARDS ("UPLOADS") OFFERED VNS/VNF ACCORDING TO TOOLKIT AND CERTIFICATE REQUIREMENTS OF APP STORE PORTAL)
144
APP STORE PORTAL ACCEPTS SERVICE CONTAINER FOR OFFERED VNS/VNF IN RESPONSE TO DETERMINING OFFERED VNS/VNF COMPLIES WITH CERTIFICATION REQUIREMENTS, BEGINS ADVERTISING OFFERED VNS/VNF IN APP STORE MENU
146
APP STORE PORTAL SENDS APP STORE MENU TO REQUESTING USER OF IDENTIFIED HOST SP, INCLUDING THIRD PARTY APPS AND VNS/VNFs AUTHORIZED BY HOST SP
148
A

FIG. 9A

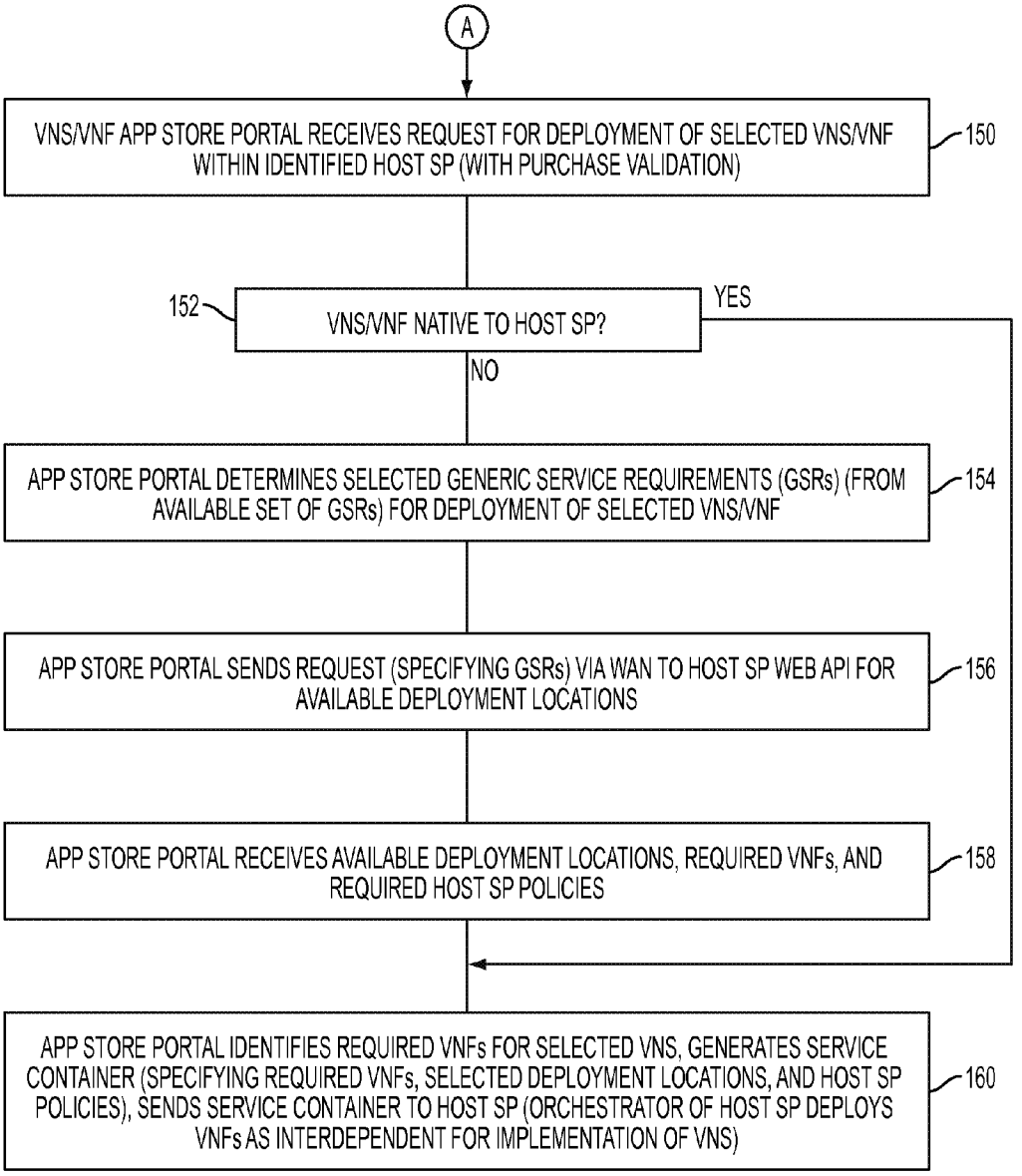
A
VNS/VNF APP STORE PORTAL RECEIVES REQUEST FOR DEPLOYMENT OF SELECTED VNS/VNF WITHIN IDENTIFIED HOST SP (WITH PURCHASE VALIDATION)
150
152
VNS/VNF NATIVE TO HOST SP?
YES
NO
APP STORE PORTAL DETERMINES SELECTED GENERIC SERVICE REQUIREMENTS (GSRs) (FROM AVAILABLE SET OF GSRs) FOR DEPLOYMENT OF SELECTED VNS/VNF
154
APP STORE PORTAL SENDS REQUEST (SPECIFYING GSRs) VIA WAN TO HOST SP WEB API FOR AVAILABLE DEPLOYMENT LOCATIONS
156
APP STORE PORTAL RECEIVES AVAILABLE DEPLOYMENT LOCATIONS, REQUIRED VNFs, AND REQUIRED HOST SP POLICIES
158
APP STORE PORTAL IDENTIFIES REQUIRED VNFs FOR SELECTED VNS, GENERATES SERVICE CONTAINER (SPECIFYING REQUIRED VNFs, SELECTED DEPLOYMENT LOCATIONS, AND HOST SP POLICIES), SENDS SERVICE CONTAINER TO HOST SP (ORCHESTRATOR OF HOST SP DEPLOYS VNFs AS INTERDEPENDENT FOR IMPLEMENTATION OF VNS)
160

FIG. 9B

APP STORE PORTAL PROVIDING POINT-AND-CLICK DEPLOYMENT OF THIRD-PARTY VIRTUALIZED NETWORK FUNCTIONS

[0001] This application claims priority to Provisional Application No. 61/814,685, filed Apr. 22, 2013.

TECHNICAL FIELD

[0002] The present disclosure generally relates to physical machine-based systems providing a web-based portal for purchase and point-and-click deployment of third-party virtualized network functions.

BACKGROUND

[0003] This section describes approaches that could be employed, but are not necessarily approaches that have been previously conceived or employed. Hence, unless explicitly specified otherwise, any approaches described in this section are not prior art to the claims in this application, and any approaches described in this section are not admitted to be prior art by inclusion in this section.

[0004] Virtualization has extended from a single application service (e.g., a virtualized operating system) to virtualization of network functions. As more network functions are virtualized and support elastic scale, the ability to perform commissioning, capacity planning, and management of devices grows increasingly complex. When a network operator dimensions infrastructure, the manual process includes the understanding of interdependency between multiple software elements.

[0005] Network Function Virtualization (NFV) is now an Industry Standards Group (ISG) within the European Telecommunications Standards Institute (ETSI). Virtualization of network functions aims to define an architectural standard for replacing hardware appliances with virtual appliance by evolving standard IT virtualization technology, to enable consolidation of many network equipment types onto industry standard high volume servers, switches and storage. It involves implementing network functions in software that can run on a range of industry standard server hardware, and that can be moved to, or instantiated in, various locations in the network as required, without the need to install new equipment. This technology could provide significant benefits for network operators and their customers: reduced operator capital expenditures and operating expenditures through reduced equipment costs and reduced power consumption; reduced time-to-market to deploy new network services; improved return on investment from new services; greater flexibility to scale up, scale down or evolve services; openness to the virtual appliance market and pure software entrants; and opportunities to trial and deploy new innovative services at lower risk. As more vendors develop virtualized network functions (VNFs), significant modifications in how network operators provision the virtual environment and install new VNFs will take form. Network operators currently tend to manually create new services by manually identifying the VNFs to be deployed for a new service, and manually deploying the identified VNFs using an Operational Support System (OSS).

BRIEF DESCRIPTION OF THE DRAWINGS

[0006] Reference is made to the attached drawings, wherein elements having the same reference numeral designations represent like elements throughout and wherein:

[0007] FIG. **1** illustrates an example architecture for point-and-click deployment of virtualized network services in a host service provider, based on sending a container specifying instructions to an orchestrator providing service level orchestration in the host service provider, according to an example embodiment.

[0008] FIG. **2** illustrates another example architecture of the orchestrator of FIG. **1** providing coordinated execution of the virtualized network services based on execution of interdependent virtualized network functions according to an example embodiment.

[0009] FIG. **3** illustrates another example architecture of the orchestrator of FIG. **1** providing coordinated execution of virtualized network functions across respective network function virtualization domains.

[0010] FIG. **4** illustrates an example implementation of a single row of a physical data center that can implement the example embodiments.

[0011] FIG. **5** illustrates an example apparatus for executing any one of point-and-click advertisement and request of virtualized network services, or deployment of the virtualized network services, according to an example embodiment.

[0012] FIGS. **6**A and **6**B illustrate an example method by the orchestrator of defining interdependent virtualized network functions for service level orchestration of a virtualized network service for a customer, according to an example embodiment.

[0013] FIG. **7** illustrates an example architecture of a virtualized service gateway in a telecommunications network based on the orchestrator of FIG. **1** defining interdependent virtualized network functions, according to an example embodiment.

[0014] FIG. **8** illustrates example available virtualized network services advertised by an apparatus as an "app store", for point-and-click deployment of virtualized network functions and/or virtualized network services in a host service provider, according to an example embodiment.

[0015] FIGS. **9**A and **9**B illustrate an example method by the apparatus of FIG. **8** in providing point-and-click deployment of virtualized network functions and/or virtualized network services, according to an example embodiment.

DESCRIPTION OF EXAMPLE EMBODIMENTS

Overview

[0016] In one embodiment, a method comprises receiving by an apparatus, via a wide area network, a request for deployment of a selected one of available virtualized network services advertised by the apparatus, the request identifying a host service provider to deploy the one virtualized network service; identifying, by the apparatus, virtualized network functions required by the host service provider for implementation of the one virtualized network service, each virtualized network function having a corresponding and distinct virtualized container specifying attributes for defining execution of the corresponding virtualized network function within one or more physical machines of the host service provider; and sending to the host service provider, by the apparatus, a service container specifying instructions for deploying the one virtualized network service, the service container including instructions for deploying the virtualized network functions as interdependent for implementation of the one virtualized network service by the host service provider.

[0017] In another embodiment, an apparatus is implemented as a physical machine and comprises non-transitory machine readable media, a device interface circuit, and a processor circuit. The non-transitory machine readable media is configured for storing executable machine readable code. The device interface circuit is configured for receiving a request via a wide area network. The processor circuit is configured for executing the machine readable code, and when executing the machine readable code operable for: determining the request is for deployment of a selected one of available virtualized network services advertised by the apparatus, the request identifying a host service provider to deploy the one virtualized network service; identifying virtualized network functions required by the host service provider for implementation of the one virtualized network service, each virtualized network function having a corresponding and distinct virtualized container specifying attributes for defining execution of the corresponding virtualized network function within one or more physical machines of the host service provider; and sending to the host service provider, via the device interface circuit, a service container specifying instructions for deploying the one virtualized network service, the service container including instructions for deploying the virtualized network functions as interdependent for implementation of the one virtualized network service by the host service provider.

[0018] In another embodiment, logic is encoded in one or more non-transitory tangible media for execution by a physical machine and when executed by the physical machine operable for: receiving, via a wide area network, a request for deployment of a selected one of available virtualized network services advertised by the apparatus, the request identifying a host service provider to deploy the one virtualized network service; identifying virtualized network functions required by the host service provider for implementation of the one virtualized network service, each virtualized network function having a corresponding and distinct virtualized container specifying attributes for defining execution of the corresponding virtualized network function within one or more physical machines of the host service provider; and sending to the host service provider a service container specifying instructions for deploying the one virtualized network service, the service container including instructions for deploying the virtualized network functions as interdependent for implementation of the one virtualized network service by the host service provider.

DETAILED DESCRIPTION

[0019] Particular embodiments can provide a digital distribution platform, or an "app store" for deployment of virtual network functions (VNFs) and/or virtualized network services (VNSs) in a host service provider such as a telecommunications service provider offering telecommunications services using a virtualized network infrastructure. The deployment in a host service provider (SP) of VNFs and/or VNSs requested based on a user accessing the VNS/VNF app store can be based on establishing standardized interfaces between the app store and different entities that communicate with the app store: example user entities that can communicate with the app store can include vendors, consumers, and web-based application programming interfaces (APIs) of the host service provider.

[0020] In one embodiment, a vendor (e.g., third party software developer, third party service vendor, service provider offering its own VNFs and/or VNSs, etc.), can communicate with the app store to submit its VNFs/VNSs according to prescribed certification requirements, for sale and distribution worldwide (e.g., via a wide area network). Consumers (e.g., service provider administrators, end customers subscribing to a host service provider, etc.) can communicate with the app store to request deployment of a selected VNF/VNS in a host service provider (from among multiple available service providers). The app store can communicate with web-based application programming interfaces of a host service provider, for example an app store query for details regarding VNFs, policies, available deployment locations, etc., for deployment of a virtualized network service according to generic requirements for the virtualized network service.

[0021] Hence, the example embodiments can provide a standardized web based application store portal that can provide a "point-and-click" deployment of third party virtualized network services (and/or virtualized network functions) in a host service provider.

[0022] A description will first be provided (with reference to FIGS. **1-7**) of a host service provider that can deploy virtualized network services overlying a network infrastructure, followed by a description (with reference to FIGS. **8**, **9**A and **9**B) of the "app store" that can provide "point-and-click" deployment of third party virtualized network services (and/or virtualized network functions) the host service provider.

Deployment of Virtualized Network Services in a Host Service Provider

[0023] The example embodiments enable an orchestrator (**12** of FIG. **1**) of a host service provider (**130** of FIGS. **1** and **8**) to identify within a virtual container the interdependence of specific software elements. In the example of Network Function Virtualization, being defined by the European Telecommunications Standards Institute (ETSI), the example embodiments can define interdependent Virtualized Network Functions and allow the management system to determine the appropriate interdependent scaling attributes between these virtualized network functions.

[0024] FIG. **1** illustrates an example architecture **10** of a host service provider **130** for coordinated execution of virtualized network services by an orchestrator **12** executed by a physical machine (e.g., **12** FIG. **5**) and providing service level orchestration, according to an example embodiment. The architecture **10** illustrates a service level orchestrator **12** providing a virtualized network service and including a business level orchestration layer **20**, a service orchestration layer **22**, a service supplier layer **24**, and a resource supplier layer **26**. As described in further detail below, the orchestrator **12** can identify virtualized network functions required for implementation of a virtualized network service requested by a customer (e.g., a customer request **14** in the form of a container **16**) for example via a web-based consumer portal **18**. The orchestrator **12** also can receive administrative and provisioning requests (e.g., adding physical resources **26** to inventory for allocating capacity, described below) from an administrative portal **28**.

[0025] The service orchestration layer **22** can include the service level orchestrator **12** and catalogs **30** that track allocated capacity and available capacity for various virtualized services **32**. Example virtualized services **32** can include a compute domain controller **32***a* for virtualized compute services, a network domain controller **32***b* for virtualized net-

work services, a storage domain controller **32***c* for virtualized storage services, and IP address management (IPAM) over **32***d* virtualized IP address management services, for example personalized dynamic host configuration protocol (DHCP) services, a service gateway application domain controller **32***e* for virtualized Internet Protocol (IP) services (described in further detail below with respect to FIG. **7**), a Operation Support System (OSS)/Business Support System (BSS) domain controller **32***f* for virtualized OSS/BSS services, etc. Execution of the virtualized services can be implemented by a resource supplier layer **26** providing physical resources **34**, for example in a data center at a single location or distributed among different geographic locations and interconnected via a public or private local and/or wide area data network (e.g., the Internet).

[0026] The orchestrator **12** can create, for each catalog **30** and associated controller **32**, a corresponding container that defines the associated operations to be performed, described below. The orchestrator **12** can set interdependency indicators within each of the containers, enabling for coordinated monitoring and management of each of the virtualized functions provided by the various controllers **32**. In particular, controllers **32***a*, **32***b*, **32***c*, and **32***d* can be part of a virtualized Infrastructure as a Service (IaaS) **36**, and the controllers **32***e* and **32***f* can be part of a virtualized Platform as a Service (PaaS) **38**. As described in further detail below, the interdependency indicators enable virtualized network function to operate as a "stateful" entity that enables coordinated execution, monitoring, and scalability management among the virtualized containers associated with a network service.

[0027] FIG. **2** illustrates another example architecture **10'** of the orchestrator **12** of FIG. **1** in a host service provider **130** providing coordinated execution of the virtualized network services based on execution of interdependent virtualized network functions according to an example embodiment. FIG. **2** illustrates a virtualized OSS/BSS domain controller **32***f* in communication with a service level orchestrator **12** for provisioning of virtualized network services **54** from within a service domain **56**, also referred to as a service level container.

[0028] FIG. **3** illustrates a virtualized orchestrator **12** containing application decision-making logic (including fault recovery) **70**, a life-cycle management controller **72**, a service provisioning module **74**, and a service reporting module **80** in another example architecture **10"** of the host service provider **130**. The life cycle management module can communicate with a cloud controller API **82** controlling virtualized infrastructure services **62** provided by hardware resources **34**, e.g., a physical server machine **84** hosting a kernel-based virtual machine (KVM) **85**, network switching devices **86**, database storage devices **88**, etc. Example operations by the life-cycle management module **72** can include starting virtual machines with image/boot parameters, suspend or kill virtual machines, detect hardware-based heartbeats, receiving hardware load parameters (e.g., CPU utilization, memory utilization, network link utilization, etc.).

[0029] The service reporting module **80** of FIG. **3** can receive context-based alerts or load parameters from the virtualized network functions **60***a*, **60***b*, and/or **60***c*. For example, the network function virtualization (NFV) **60***a* can provide classifier operations for a virtualized IP services using a virtualized load balancer **68** and virtualized classifier applications **69**; the NFV **60***b* can provide software defined networking (SDN) service chains for the virtualized IP services, for example using virtualized forwarding switches **66**, virtualized service applications (e.g., eNodeB) **58***a* and mobility management entity (MME) **58***b*, etc., and a virtualized dynamic host configuration protocol (DHCP) module **71**; and the NFV **60***c* can provide application analytics for the virtualized IP services using a virtualized load balancer **68** and virtualized analytics applications **72**. As described below, the service reporting module can receive updates from any one of the virtualized elements of the NFV applications **60** based on an interdependency indicator set in the corresponding container for the virtualized element.

[0030] The application decision making (and fault recovery) module **70** can provide overall provisioning requests to the service provisioning module **72** based on the information from the life cycle management module **72** regarding the virtualized hardware and/or hardware state as reported by the cloud controller API **72**, new service requests from the OSS/BSS module **32** (not shown in FIG. **3**), and/or the service reporting module **80** reporting on the state of the VNFs (e.g., **58**, **66**, **68**, **69**, **71**, **72**), for example on a per-service-chain basis based on the interdependency indicators.

[0031] The orchestrator **12** of FIGS. **2** and **3** can track performance of each individual virtualized network function (VNF) **58**, **62**, **64**, **66**, within the VNF domain (i.e., VNF container) **60**, based on receiving management messages, e.g., via a virtualized VNF manager (i.e., VNF manager container) **62**; the orchestrator **12** can request the virtualized OSS/BSS domain controller **32***f* to execute a coordinated increase in capacity in the VNF domain **60** for each of the interdependent VNFs **58** associated with a given virtualized network service **54**. Different types of virtualized network services **54** can be deployed according to the example embodiments, including virtualized network services having endpoints, and virtualized network services without endpoints (e.g., service brokers and/or translators). Example virtualized network services can include a Telepresence video conference session, a WebEx web meeting, streaming video, IP Multimedia System (IMS) session, an Evolved Packet System (EPS) Bearer session. For example, assume the orchestrator **12** in FIG. **2** initiates a new Evolved Packet System (EPS) service such as a mobile platform in a long term evolution (LTE) communications network: the orchestrator can allocate a virtualized Evolved Node B (eNodeB) **58***a*, a virtualized mobility management entity (MME) **58***b*, a virtualized Session Gateway (SGW) **58***c*, a virtual Customer Premises Equipment manager (CPE) **58***d*, and a virtualized packet gateway (PGW) **58***e*. As described in further detail below, the orchestrator **12** can set, within each container for the corresponding virtualized network function **58***a*, **58***b*, **58***c*, **58***d*, and **58***e* allocated for the specific virtualized EPS service **54**, an interdependency indicator based on association with the virtualized EPS service **54**. In other words, the interdependency indicator in each container can be used to establish interrelationships between the VNFs **58***a*, **58***b*, **58***c*, **58***d*, and **58***e* associated with a service chain, even though each VNF **58** normally would respond to requests only via the virtualized hardware elements (e.g., virtual machine, hypervisor, virtual switch, software defined network (SDN) controller) **61** in the network function virtualization instance (NFVI) **62**. Hence, any virtualized VNF (e.g., **58***b*) can send an alert to a reporting module (**80** of FIG. **3**) indicating a need for more resources based on the interdependency indicator identifying to the virtualized VNF **58** (and/or any other resource polling the virtualized VNF **58**) that it is interdepen-

dent with other VNFs, enabling the orchestrator **12** to request the OSS/BSS module **32***f* for a coordinated capacity increase for all the VNFs **58***a*, **58***b*, **58***c*, **58***d*, and **58***e* in the service chain, or any other VNF providing support for the service chain. The virtual infrastructure manager also can notify the orchestrator **12** of hardware-based capacity issues in either the virtual infrastructure elements **60** or physical hardware resource elements **34**.

[0032] The identification between interdependent functions is based on setting an interdependency indicator within each container for a corresponding virtual network function associated with a virtual network service; in one embodiment, the interdependency indicator can be set in VNFs of a "service chain" (which can be implemented in the form of a serial chain topology, a star topology, or a bus topology) and any VNFs providing support for the service chain (e.g., billing interface, management, etc.). A "container" is defined as a definition of a particular executable function that can be executed, by a physical machine, as part of a virtualized service within a virtualized environment managed by a hypervisor, as opposed to a "bare metal" execution of the executable function directly by the physical machine. Examples of a physical machine can include a personal computer, a server computing element (e.g., "blade" server), a single or multiple processor core device implemented in a data center, etc. The "container" can have different forms, depending on the execution state of the corresponding executable function: if the execution state is inactive (e.g., shut down, suspended, hibernating, etc.), the container can be implemented solely as a data structure on one or more non-transitory physical media that includes any definitions, permanent and/or temporary application state variables, etc., that define the corresponding executable function at a prescribed application state; if the execution state is active, the container can be implemented as one or more executable instances of a virtualized executable function within an virtualized application runtime environment managed by a hypervisor, where the one or more executable instances can be executed on one or more physical machines according to the definitions, attributes, etc. stored in the data structure. Hence, an active container can be considered a Turing machine executing the operations defined in the corresponding data structure.

[0033] A container also inherits any and all hierarchal attributes associated with the particular executable function that it defines. Hence, as illustrated in FIGS. **2** and **3**, a first container (e.g., **58***a*) can be "within" a second container (e.g., a first container inserted "within" the second container) (e.g., **60***b*) if the first container has a lower hierarchal order (i.e., lower hierarchal "layer") than the second container in an execution hierarchy, and the second container has a reference to the first container for execution of a prescribed virtualized operation associated with the at least a portion of a service provided by the second container. In other words, the first container can define at least one first executable operation required for execution of a second executable operation by the second container in the execution hierarchy. A first container can be considered as "within" a second container if both the first container and the second container share a common "domain" (e.g., administrative control, execution within the same physical machine, line card, rack, switching domain, data center, etc.) within a prescribed hierarchy; the first container also can be considered as "outside" and "below" the second container if the first container and the second container do not share the common "domain". As apparent from the description and accompanying drawings, the relationship between the first container and second container can vary depending on the type of hierarchy under analysis.

[0034] A fundamental problem associated with prior virtualizing of network functions is that the associated containers became "stateless" elements without knowledge of other virtualized network functions associated with a virtualized network service. In particular, a virtualized network function was considered "stateless" because it would only respond to a received request, where the request typically was from a container in a higher "level" of the hierarchy in a "North-South" computing system topology. In other words, a higher level container would contain a pointer for reachability to send a request to a lower-level container to perform a prescribed lower-level virtualized computing operation, and the request would contain sufficient information (e.g., IP address) to enable the lower-level container to send a response to the higher-level container. However, the lower-level container would have no knowledge of the higher-level container outside of the request initiated by the higher-level container, rendering the lower-level container incapable of initiating communications with the higher-level container.

[0035] Moreover, operations across multiple virtualized lower-level containers required a higher-level container to coordinate the sequence of requests and responses among each of the lower-level containers, such that lower-level containers were unaware of each other. Further, orchestrators to date were only involved with the creation of service by assigning lower-level containers (providing respective virtualized network functions) to a higher-level container providing the virtualized network service, with no consideration of the need for coordinated monitoring of the performance and needs for changes in capacity in the lower-level containers. Hence, any need for increasing capacity for a first virtualized network function associated with a virtualized network service was performed without regard to the need for a coordinated increase of capacity for other virtualized network functions associated with the same virtualized network service. Such uncoordinated increases in capacity could arise if different virtualized network services require different types of capacity increase (e.g., increase in bandwidth increase vs. increase in computer power capacity vs. increase in data storage capacity).

[0036] FIG. **4** illustrates an example implementation of a single row **110** of a physical data center having multiple physical rows **110** and that can implement the example embodiments. The following description of a data center that can implement virtualized network functions and virtualized network services according to example embodiments can help illustrate the complexity of allocating virtualized network functions for a virtualized network service, and the benefit of identifying interdependence among virtualized network functions (or attributes thereof).

[0037] Data center rooms typically are organized in multiple rows **110**, with multiple physical racks **112** per row **110**. Each physical rack **112** typically contains multiple physical servers **84**, each representing physical resources upon which the orchestrator **12** can place (i.e., allocate, assign, etc.) a VNF (e.g., **58**). Each server **84** also has a virtual switch (Vswitch) **116** configured for providing localized connections to (and between) the VNFs that reside on the physical server **84**. Each rack **112** can include (e.g., at the top of the rack) a physical "Top of Rack" (ToR) switch **118**, which provides the rack-level connectivity to (and between) the

VNFs **58** that reside on different physical servers **84** within the corresponding rack **112**. A multitude of racks **112** together comprise a row **110**. Each row **110** in a data center can include at least one physical End of Row (EoR) switch **120**, which provides aggregation of all ToR switches **118** and provides row-level connectivity for VNFs **58** that reside within the row on different racks **112**.

[0038] The physical resources (e.g., compute, memory, and/or network) that are consumed to provide a virtualized network service are based on the placement of the associated VNFs **58** within the data center; in other words, more network resources are required to provide a virtualized network service if the interdependent VNFs are placed within physical servers **84** that are further apart topologically within a data center, Ideally, all VNFs **58** for a particular virtualized service would reside on the same physical server **84**, such that the communication flows between the VNFs **58** of the same service would be limited to only involve the Vswitch **116** in the same physical server **84**; however, placement of all VNFs **58** associated with a particular virtualized service within a single physical server **84** may not always be possible due to limited resources within the single physical **84**.

[0039] The next ideal scenario is for all VNFs **58** associated with a particular service to reside on the same physical rack (e.g., "Rack 2") **112**, which limits communication flow between VNFs **58** of the same virtual service to involve the corresponding ToR switch **118** for that rack (e.g., "Rack 2") **112**, and the number N×Vswitches **116** associated with the servers **84** for the N VNFs **58**. However, because there are limited resources within a single rack **112**, allocating all VNFs **58** within a single rack **112** may not always be possible.

[0040] A less ideal scenario is when VNFs **58** associated with a particular virtualized service reside on different racks (e.g., "Rack 1" and "Rack N") **112** within the same row **110**. The communication flow between the VNFs **58** for the same virtual service now involve the EoR switch **120** for that row **110**, M×ToR **118** switches (one for each rack **112** containing an associated VNF **58**) and N×Vswitches **116** associated with the servers **84** for the N VNF **58**. However, because there are limited resources within a single row **110**, this allocation within a single row **110** may not always be possible.

[0041] An even less ideal scenario is when VNFs **58** associated with a particular virtualized network service reside on different rows **110** within the same data center. The communication flow between the VNFs associated with the same virtual service now involve L×EoR switches **120** (one for each row **110** containing an associated VNF **58**), M×ToR switches **118** (one for each rack **112** containing an associated VNF **58**), and N×Vswitches **116** associated with the physical servers **84** for the N VNFs **58**.

[0042] The orchestrator **12** is responsible for limiting the number of physical resources involved in the implementation of the virtual service, and ensure that interdependent VNFs **58** are located in such a way to minimize implications to ToR switches **112** and EoR switches **120** (i.e., minimize the use of the ToR switches **112** and/or EoR switches **120** for execution of a given virtualized network service). In the case of a distributed architecture that utilizes multiple physical data centers connected by wide area network (WAN) circuits, the management by the orchestrator becomes even more complex.

[0043] According to example embodiments, the orchestrator executed by a physical machine (FIG. **5**) not only can allocate virtualized network functions for creation of a virtualized network service, but the orchestrator also can identify each of the virtualized network functions as inderdependent for coordinated execution of the virtualized network service, based on setting by the orchestrator an interdependency indicator within each virtualized container associated with providing a corresponding virtualized network function for the virtualized network service. The interdependency indicator can create a "stateful" condition in the virtualized container, enabling the virtualized container to utilize the interdependency indicator as a "pointer" toward a virtualized management entity associated with the virtualized network service.

[0044] The virtualized management entity, executed for example as part of the orchestrator (e.g., the service reporting module **80** of FIG. **3**), can receive information associated the performance of the virtualized container within the context of the virtualized network service; hence, the orchestrator **12** can monitor the performance of each virtualized network function within the context of the virtualized network service, and execute coordinated changes among the virtualized network functions associated with the virtualized network service. Hence any capacity changes required by a given virtualized network function can be coordinated among the interdependent virtualized network functions by the virtualized management entity.

[0045] In another embodiment, a network orchestration function, can be aware of the type of network function being virtualized, and can establish requests to a Cloud Orchestrator at a different hierarchal level. The Network Orchestration Function can assign unique Virtual Machines to well-understood network functions. A cloud orchestration layer, which resides above the Network Orchestration Function, can remain unaware of the nature of the Virtual Network Function, and only need be interested in the set of requirements for the Virtual Network Function. In another embodiment, the network orchestration function and cloud orchestration function can be "collapsed" into a single orchestration function.

[0046] In a mobile environment, this interdependence can be seen between such virtualized nodes as a MME **58***b*, SGW **58***c*, PGW **58***e*, a Home Subscriber Server (HSS) (not shown), and a Policy and Rules Charging Function (PCRF) (not shown), all of which scale multidimensionally based on subscribers, sessions, and control-plane events. In the case of bearer nodes, such as SGW and PGW, scale is also based on features and throughput.

[0047] Hence, particular embodiments can identify within a virtual container the interdependence of specific software elements. In the case of Network Function Virtualization, being defined by the European Telecommunications Standards Institute (ETSI), the example embodiments can define interdependent Virtualized Network Functions and allow the management system to determine the appropriate interdependent scaling attributes between these virtualized network functions.

[0048] FIG. **5** illustrates an example implementation of a machine **14** configured for executing any one of the disclosed virtual elements, including the orchestrator **12** or the consumer portal **18**. FIG. **5** also illustrates any one of the physical devices **84**, **86** (e.g., FIG. **3** or **4**), **118** and/or **120** (e.g., of FIG. **4**), **28**, **132**, **134** (e.g., FIG. **8**). The apparatus **14**, **28**, **84**, **118**, **120**, **132**, and/or **134** can include a network interface circuit **44**, a one or more processor circuits **46**, and a memory circuit **48**. The network interface circuit **44** can include one or more distinct physical layer transceivers for communication with any one of other devices **84**, **86**, and/or **88** of FIG. **3**; the

network interface circuit **44** also can include an IEEE based Ethernet transceiver for communications with the devices of FIG. **3** via a wired Ethernet link, and/or a fiber optic transceiver, etc. The processor circuit **46** can be configured for executing any of the operations described herein, and the memory circuit **48** can be configured for storing any data as described herein.

[0049] Any of the disclosed circuits of the apparatus **12**, **14**, **28**, **84**, **118**, and/or **120** (including the network interface circuit **44**, the processor circuit **46**, the memory circuit **48**, and their associated components) can be implemented in multiple forms. Example implementations of the disclosed circuits include hardware logic that is implemented in a logic array such as a programmable logic array (PLA), a field programmable gate array (FPGA), or by mask programming of integrated circuits such as an application-specific integrated circuit (ASIC). Any of these circuits also can be implemented using a software-based executable resource that is executed by a corresponding internal processor circuit such as a microprocessor circuit (not shown) and implemented using one or more integrated circuits, where execution of executable code stored in an internal memory circuit (e.g., within the memory circuit **48**) causes the integrated circuit(s) implementing the processor circuit to store application state variables in processor memory, creating an executable application resource (e.g., an application instance) that performs the operations of the circuit as described herein. Hence, use of the term "circuit" in this specification refers to both a hardware-based circuit implemented using one or more integrated circuits and that includes logic for performing the described operations, or a software-based circuit that includes a processor circuit (implemented using one or more integrated circuits), the processor circuit including a reserved portion of processor memory for storage of application state data and application variables that are modified by execution of the executable code by a processor circuit. The memory circuit **48** can be implemented, for example, using a non-volatile memory such as a programmable read only memory (PROM) or an EPROM, and/or a volatile memory such as a DRAM, etc.

[0050] Further, any reference to "outputting a message" or "outputting a packet" (or the like) can be implemented based on creating the message/packet in the form of a data structure and storing that data structure in a non-transitory tangible memory medium in the disclosed apparatus (e.g., in a transmit buffer). Any reference to "outputting a message" or "outputting a packet" (or the like) also can include electrically transmitting (e.g., via wired electric current or wireless electric field, as appropriate) the message/packet stored in the non-transitory tangible memory medium to another network node via a communications medium (e.g., a wired or wireless link, as appropriate) (optical transmission also can be used, as appropriate). Similarly, any reference to "receiving a message" or "receiving a packet" (or the like) can be implemented based on the disclosed apparatus detecting the electrical (or optical) transmission of the message/packet on the communications medium, and storing the detected transmission as a data structure in a non-transitory tangible memory medium in the disclosed apparatus (e.g., in a receive buffer). Also note that the memory circuit **48** can be implemented dynamically by the processor circuit **46**, for example based on memory address assignment and partitioning executed by the processor circuit **46**.

[0051] FIGS. **6**A and **6**B illustrate an example method by the orchestrator of defining interdependent virtualized network functions for service level orchestration of a virtualized network service for a customer, according to an example embodiment. The operations described with respect to any of the Figures can be implemented as executable code stored on a computer or physical machine readable non-transitory tangible storage medium (e.g., floppy disk, hard disk, ROM, EEPROM, nonvolatile RAM, CD-ROM, etc.) that are completed based on execution of the code by a processor circuit implemented using one or more integrated circuits; the operations described herein also can be implemented as executable logic that is encoded in one or more non-transitory tangible media for execution (e.g., programmable logic arrays or devices, field programmable gate arrays, programmable array logic, application specific integrated circuits, etc.).

[0052] In addition, the operations described with respect to any of the Figures can be performed in any suitable order, or at least some of the operations in parallel. Execution of the operations as described herein is by way of illustration only; as such, the operations do not necessarily need to be executed by the physical machine-based hardware components as described herein; to the contrary, other physical machine-based hardware components can be used to execute the disclosed operations in any appropriate order, or at least some of the operations in parallel.

[0053] The service orchestration module (i.e., the network orchestrator) **12** in operation **90** can receive a request for creation for a virtualized network service **54**, for example a new network request in the form of a container **16** from a customer portal **18** (FIG. **1**). The service level orchestrator **12** in operation **92** can create a virtualized network service (VNS) container for the customer, including for example a customer number, session identifier, etc. The service level orchestrator **12** also can identify in operation **94** any virtualized network functions (VNFs) from the VNF domain **60** that are required for implementation of the virtualized network service. As part of the provisioning operation, the service level orchestrator **12** in operation **96** can construct and/or update each VNF container for any required VNFs from the VNF domain **60** with any necessary parameters or requirements.

[0054] The network orchestrator **12**, as part of service creation, can specify in operation **96** any one or more of the following requirements in a container for a virtualized operation: Compute Resources; Storage Resources and Type (IMDB, SAN, Disk, SSD); Memory Resources (RAM) (in the case of IMDB, memory resources may be tied to storage); L2/L3 Virtual Interface (Bandwidth, number of VLAN identifiers, number of IP Address Pool, throughput); I/O Resources (Bandwidth to storage, to management plane, to bearer plane, etc.); QoS (MBR, GBR, Latency, jitter, etc.); physical, network, and/or virtual location information; Load-balancing request (across multiple VMs); Elasticity Requests or requirements for auto-scaling. The network orchestrator **12** also can add session IDs, IP addresses, TCP/UDP ports, QoS Requirements, manager server ID (e.g., to send notification messages regarding management flags, SNMP traps, capacity alarms, etc.), as well as other container-specific parameters.

[0055] The network orchestrator **12** also in operation **96** can set an interdependency indicator in each VNF container associated with the virtualized network service **54**: if necessary, the interdependency indicator can be set on a per-attribute basis, especially if different alerts require additional capacity of different types or dimensions (e.g., move to larger machine to increase compute or storage, increase bandwidth

or QoS, etc.). In other words, the network orchestrator **12** can set a first interdependency indicator for "direct interdependence" between attributes of the same or similar types, for example where the first interdependency indicator can indicate that scaling a bandwidth on VNF1 (e.g., **58***d*) affects scaling bandwidth on VNF2 (e.g., **58***e*); the network orchestrator **12** also can set a second interdependency indicator for "indirect interdependence" between attributes of different types, for example the second interdependency indicator set for a first attribute of a first attribute type (e.g., network bandwidth) in a first VNF container **58***b* can identify an interdependence with a corresponding set second interdependency indicator for a second attribute of a second attribute type (e.g., storage/memory requirement) in a second VNF container **57***c*. Each interdependency indicator can be implemented in various forms, for example a simple "bit" flag, a bit mask, and/or a unique value that uniquely defines the interdependency indicator within the virtualized network service **54**, etc. Other protocol-specific indicators can be used to ensure the orchestrator **12** is aware of the interdependency between virtualized network functions. Hence, virtualized network functions can be identified as interdependent based on their respective containers having the same interdependency indicator (e.g., same bit flag, same corresponding bit within a bit mask, same indicator value, etc.).

[0056] Interdependency between virtualized network functions (and/or between attributes of different VNFs) can be known by the network orchestrator **12** before the creation of the virtualized network service **54**, for example based on prescribed definitions of the virtualized network service **54**, the VNFs **58**, and/or any of the associated attributes. Interdependency between virtualized network functions (and/or between attributes of different VNFs) also can be determined (e.g., "learned") by the network orchestrator **12** during and/or after service creation based on the network orchestrator **12** monitoring the virtualized network service **54**. Hence, the orchestrator in operation **96** can define a service chain **60** (e.g., in FIG. **7**) of the VNFs **58** for coordinated execution of the virtualized network service.

[0057] The network orchestrator **12** in operation **98** can update the VNS container with the reachability information for the allocated interdependent VNF containers, enabling identification of the VNFs **58** associated with the specific VNS session **54**. The orchestrator **12** in operation **100** can activate the VNS container for service in response to detecting all the associated VNF containers have completed activation.

[0058] Referring to FIG. **6**B, the Network Orchestration Function **12** is enabled in operation **102** to understand (either through derived logic, such as analytics, or directly, through programming) the interdependence between particular virtual network functions, and manage execution of the VNFs relative to the execution of the service chain **60**. In a mobile environment, for example, the Network Orchestration Function is enabled to understand the correlation of bandwidth between the SGW and PGW, or the correlation between memory resources between SGW, PGW, and MME, or further to understand the transaction scale correlation between the HSS and SPR.

[0059] For example, in operation **104** the orchestrator **12** (e.g., the server reporting module **80** of FIG. **3**) can receive an alert from an active VNF container. If in operation **106** the application decision making module **70** detects the alert is from an active VNF container having an interdependency indicator, the application decision making module **70** can coordinate the alert in operation **108** among the interdependent active VNF containers (e.g., across all the applications **60***a*, **60***b*, **60***c*, and/or any of the elements **58**, **66**, **68**, **69**, **71**, **72**, etc.). For example, if more resources are needed, the requirement for more resources can be increased multidimensionally across all the interdependent VNF containers for a coordinated increase in capacity. For example, if additional instantiation is needed for a given VNF container, a corresponding increase of capacity is initiated across the interdependent containers.

[0060] Hence, the orchestration module can provide a coordinated increase of all virtualized network functions associated with a collection of different virtualized network services, even if the virtualized network functions associated with a virtualized service chain **60** need to be moved to new hardware devices. As illustrated in FIG. **7**, the numerous virtualized functions associated with the virtualized IP services **56** can have increased capacity in a coordinated manner, including the classification functions **60***a*, service chains **60***b* providing various operations (e.g. YouTube streaming, etc.) using coordinated virtualized operations such as deep packet inspection (dpi), layer 2-7 proxy operations, and Network Address Translation/Firewall (nat/fw) operations. Other operations associated with the IP services **56**, including analytics **72** that are identified as interdependent with the operations **60**, etc. also are provided coordinated execution of management operations.

[0061] According to example embodiments, coordinated scaling of virtualized network functions ensures an entire virtualized network service can be scaled as needed. Different modifications and variations can be employed, described below.

[0062] In another embodiment, the Virtual Network Function when distributed over multiple VM can make use of an application level load balancing that shall take account of many of the KPI as stated above to make full and effective use of the available resources yet shall not be responsible for establishing additional Virtual Machine entities.

[0063] The Network Orchestration Function is operable to support this interdependency indicator on a per-attribute basis, and alert the Cloud Orchestrator when there are dependencies between particular Network Functions contained within Virtual Machines.

[0064] The Cloud Orchestrator is operable to notify the Network Orchestration Function of the assignment of particular Virtual Machine identifiers to particular requests such that the Network Orchestration Function can map virtual topologies.

[0065] When the Network Orchestration Function makes a request to the Cloud Orchestrator for the establishment or modification of a particular Virtual Machine, specific dependencies are identified (with the Interdependency Indicator identifying the attribute, and which other VMs the dependency exists with), such that appropriate actions can be taken.

[0066] In the case of VM establishment, the Cloud Orchestrator monitors KPI thresholds, rate of change of application protocol level messaging, overload and error indicator codes, operator policy and may compare the requested resource assignment with that of interdependent Network Function and make determination as to whether the request should be accepted, whether the request triggers modification of existing virtual machines, or whether the request should be rejected.

[0067] VM establishment requests which contain a load-balancing or auto-scale request require an additional orchestration event—in which the Cloud Orchestrator determines whether the stepwise increased capacity (load-balancing) or the dynamic capacity scale is one that the interdependent Virtual Machines are able to support. For instance, a load-balancing request may trigger the establishment of a new interdependent virtual machine and a similar load-balancing model to be established. An Auto-scale request may trigger the modification of existing interdependent Virtual Machines to also be auto-scale enabled. Such decision criteria are left to the logic inherent in the Cloud Orchestrator; however, the example embodiments seek to provide the interdependency information for decision logic to be implemented.

[0068] In the case of VM modification, the Cloud Orchestrator may determine whether other VMs should be scaled down to free stranded capacity or scaled up to support additional capacity.

[0069] In the case of VM deletion, the Cloud Orchestrator may determine whether other VMs should be scaled down or deleted to free stranded capacity.

[0070] In one embodiment, the Network Orchestration Function is combined (i.e., collapsed) with the Cloud Orchestration Function, allowing the Cloud Orchestration Function to be aware of, and track state of, interdependent network functions.

Digital Distribution Platform (App Store Portal) for "Point-and-Click" Deployment of VNFs/VNSs in a Host Service Provider

[0071] FIG. **8** illustrates example available virtualized network services advertised by an apparatus (e.g. of FIG. **5**) as an "app store" **18**, for point-and-click deployment of virtualized network functions and/or virtualized network services in a host service provider, according to an example embodiment. Since a virtualized network service (e.g., **54** of FIG. **2**) can include one or more virtual network functions (e.g., **58** of FIG. **2**) executed within a prescribed network infrastructure **34**, the virtualized network functions and virtualized network services as described with respect to FIGS. **8** and **9** can be referred to generally as virtualized network services **136**. The "app store" **18** can provide a web-based portal ("app store portal") that enables the distribution and "point-and-click" deployment of virtualized network services **130** within a host service provider **130**.

[0072] The app store **18** can utilize standardized interfaces between the app store **18** and different entities that communicate with the app store **18** via a wide area network (WAN) **140**, including vendor interface devices **28** and/or **132**, consumer interface devices **134**, and web-based application programming interfaces (APIs) **138** of the host service provider **130**. For example, a vendor can include a third party software developer/vendor **132** offering virtualized network services **136***a* that are distinct and independent from any service provider **130**. Example third-party virtualized network services **136***a* can include "carrier edge" applications executed at the edge of a service provider network **130**, for example Netflix Open Connect, Google Global Cache (GGC), Apple Siri, Amazon Web Services, Microsoft Skype, HBO GO®, Axeda for Machine to Machine (M2M) or Internet of Things (IoT) connectivity, Cisco WebEx, Pandora, YouTube, etc.

[0073] Another type of vendor can include an administrator **28** of the host service provider **130**, where instead of manually deploying service provider-specific virtualized network services **136***b* via an internal interface (e.g. Os-Ma of FIGS. **2** and **8**), the administrator **28** can "publish" in the app store **18**, via the wide area network **140**, selected virtualized network services **136***b* that are specifically implemented for the specific host service provider **130**. Example virtualized network services **136***b* can include virtualized mobile network services (e.g., LTE/3G/WiFi Gateway, GI-LAN Services, Voice over LTE (VoLTE), etc.), Platform as a Service (PaaS) and/or Software as a Service (SaaS) based services (e.g., Firewall/NAT, virtual routing, Machine to Machine (M2M) services), software defined network (SDN) services, etc. Hence, a service provider administrator **28** can submit its own service provider-specific virtualized network services **136***b* to the app store **18** via the WAN **140** according to prescribed certification requirements, for sale and distribution worldwide (e.g., via a wide area network). The app store **18** also can provide different virtualized network services **136***b* for different service providers **130** (e.g., AT&T, Verizon, Comcast, T-Mobile, U.S.-Cellular, Sprint, etc.) in the same or different geographic or jurisdictional regions.

[0074] Service provider consumers (e.g., enterprise-class customers and/or end customers subscribing to services offered by a host service provider **130**) **134** can communicate with the app store **18** to request deployment of a selected virtualized network service **136** in a host service provider. For example, a consumer **134** can send a request to initiate a new or additional wireless telephony service, Internet Service Provider (ISP) service, Video on Demand service, bundled data services (e.g., Verizon FIOS), etc., without the necessity of contacting a representative of the host service provider **130**.

[0075] The app store **18** can communicate with web-based application programming interfaces **138** of the host service provider **138**, for retrieval of information associated with the app store **18** generating a service container specifying instructions for deployment of a virtualized network service **136** by the host service provider **130**. For example, the app store **18** and the APIs **138** can exchange information based on prescribed interfaces: example prescribed interfaces can include interfaces pursued by ETSI NFV ISG working groups for the architecture, requirements, and capabilities of a NFV platform, associated software Virtual Network Functions (VNFs), and the management and orchestration, namely the INF (Infrastructure Architecture and capabilities) working group, the SWA (Software Architecture and capabilities) working group, and the MANO (Management and Orchestration) working group.

[0076] Hence, the prescribed interfaces between the app store **18** and the API **138** enables the app store **18** to generate a query to the web services **138** for details regarding VNFs, policies, available deployment locations, etc., for deployment of a virtualized network service **136** according to generic requirements for the virtualized network service. The web service APIs **138** can respond to the generic queries for generic requirements (e.g., "high-bandwidth and low memory", "low-bandwidth and high memory", or "high-bandwidth and high memory", etc.) having prescribed minimum (and/or maximum) values for virtualized network services based on interactions with the orchestrator **12** within the service orchestration **22**: as described previously with respect to FIGS. **1-7**, the orchestrator **22** can identify the interdependent virtual network functions required for a given virtualized network service **22**; hence, the orchestrator **22** also can determine, in response to the query from the app store **18**, any necessary virtual network functions, selected deployment

locations within the network infrastructure **34**, any necessary policies, etc., that are required for deployment of the generic requirements specified in the query from the app store **18**. Example policies can include the requirement for a virtualized firewall for any third party virtualized network service **136***a* not deemed secure by the host service provider **130** (e.g., any third party virtualized network service (or application) **136***a* not having received a provider-specific security certification from the host service provider **130**).

[0077] Hence, the web services APIs **138**, in response to receiving a query from the app store **18** and that specifies generic service requirements for a virtualized network service **136**, can generate and output a response that specifies requirements for deployment of the specified generic service requirements associated with a virtualized network service **136**: the response can specify any virtualized network functions and/or policies required by the host service provider **130**, and/or an identification of available deployment locations within the network infrastructure **34**. The response output by the web services APIs **138** and received by the app store **18** (via the WAN **140**) enables the app store **18** to create the service request (containing the service container **16**, see FIG. **1**) defining the deployment of the selected virtualized network service at one or more selected deployment locations among the available deployment locations in the host service provider **130**.

[0078] FIGS. **9**A and **9**B illustrate an example method by the apparatus **18** of FIG. **8** (illustrated as an app store portal) in providing point-and-click deployment of virtualized network functions and/or virtualized network services, according to an example embodiment. As described previously, the operations described herein can be implemented as executable code stored on a computer or physical machine readable non-transitory tangible storage medium (e.g., **48** of FIG. **5**) that are completed based on execution of the code by a processor circuit (e.g., **46** of FIG. **5**); the operations described herein also can be implemented as executable logic that is encoded in one or more non-transitory tangible media for execution. As apparent from the foregoing, the app store **18** can be executed by the processor circuit **46** of FIG. **5** within a virtualized environment.

[0079] Referring to operation **142**, the processor circuit **46** executing the app store portal **18** can advertise toolkit and certificate requirements to third party service vendors, for example third party developers **132** desiring to offer a third party virtual network service **136***a* in place of a dedicated hardware server providing the same network service; the toolkit and certificate requirements also can be advertised to administrators **28** of service providers **130**, enabling the administrators **28** to "publish" selected virtualized network services **136***b* that are specifically implemented for the specific host service provider **130**. Hence, the toolkit and certificate requirements can specify prescribed interfaces or standards (e.g., compliant with MANO, SWA, and/or INF, etc.), security agreements, subscription agreements, etc., required for a developer **28**, **132** to "upload" in operation **144** the offered VNS **136** via the WAN **140** for advertisement and distribution of the offered VNS **136** among the available virtualized network services. The offered VNS **136** is "uploaded" in the form of a service container that specifies the requirements for deployment of the offered VNS **136** according to the prescribed interfaces or standards required by the app store **18** in operation **142**.

[0080] The processor circuit **46** executing the app store portal **18** in operation **146** can accept the service container defining the offered virtualized network service **136**, based on the app store portal **18** determining that the offered virtualized network service **136** and the service vendor supplying the offered virtualized network service **136** (e.g., **28** and/or **132**) comply with the certification requirements. The app store portal **18** in operation **146** can begin advertising the "uploaded" offered virtualized network service **136** within an app store menu available to consumers **134** using a web-based portal service reachable via the WAN **140**.

[0081] The processor circuit **46** executing the app store portal **18** in operation **148** can receive (via the corresponding network interface circuit **44** of FIG. **5**) a request via the WAN **140** from a consumer **134** of the available virtualized network services advertised by the app store portal **18**. The app store portal can determine, from the request, the host service provider **130** utilized by the user from among available service providers (e.g., AT&T, MCI, Verizon, Comcast, T-Mobile, U.S.-Cellular, Sprint, etc.), in order to ensure that the user receives a listing of only the available virtualized network services (**136**) that are authorized by the host service provider **130**; in other words, if the app store **18** determines that the service provider consumer **134** is a Verizon customer (and not a subscriber to T-Mobile or AT&T), the app store **18** in operation **148** can send to the requesting user **134** only the virtualized network services **136** that are authorized by the host service provider (e.g., Verizon) **130**. Hence, the consumer **134** would not receive a listing of any provider-specific virtualized network services **136***b* of other carriers (such as T-Mobile or AT&T), nor would the consumer **134** receiving a listing of any third party virtualized network services **136***a* that are not authorized by the host service provider (e.g., Verizon) **130**, in order to ensure enforcement of security policies by the host service provider **130** (note a host service provider **130** may permit an "unauthorized" third party VNS **136***a* that is deployed behind a virtualized firewall).

[0082] Referring to FIG. **9**B, the processor circuit **46** executing the app store portal **18** can receive in operation **150** a request for deployment of a selected one of the available virtualized network services (e.g., Netflix Open Connect) **136** advertised by the app store portal **18**. The request can identify the host service provider (e.g., Verizon) that is to deploy the selected one virtualized network service **136**; as described previously, the request can be from a consumer **134** of the host service provider **130** (providing the appropriate purchase validation) and/or an administrator **28** using the app store portal **18** as an alternative to conventional provisioning using OSS provisioning.

[0083] The processor circuit **46** executing the app store portal **18** in operation **152** can determine if the virtualized network service **136** is a provider-specific virtualized network service **136**; a provider-specific virtualized network service **136***b* can have all available deployment locations, service provider policies, listing of required virtualized network functions already specified within the container maintained by the app store **18** for the provider-specific virtualized network service **136***b*, eliminating the necessity of sending a query to the web service APIs **138** in operations **143**, **156**, and **158**. Assuming no queries are needed from the web service API, the app store portal **18** can identify (from corresponding container for the chosen provider-specific virtualized network service **136***b*) the required virtual network functions, selected deployment locations, and any host service provider

policies, and send the service request **14** (containing the service container **16**, see FIG. **1**) in operation **160** for deployment of the chosen provider-specific virtualized network service **136***b* by the orchestrator **12**. As described previously, the orchestrator **12** of the host service provider **130** can deploy the required virtual network functions as interdependent for implementation of the chosen provider-specific virtualized network service **136***b*. Further details of operation **160** are provided below.

[0084] If in operation **152** the processor circuit **46** executing the app store portal **18** determines that the virtualized network service is not native to the host service provider **130** (e.g., is a third party virtualized network service **136***a* such as Netflix Open Connect), the processor circuit **46** executing the app store portal **18** can determine in operation **154** selected generic service requirements (GSRs), from an available set of generic service requirements, that are required for deployment of the selected one virtualized network service **136**. In particular, the service container that defines the selected one virtualized network service **136** can specify the generic service requirements that are needed (e.g., according to the MANO, SWA, and/or INF specifications, or according to any other prescribed specification), enabling the app store portal **18** in operation **156** to send a query to the web services APIs **138** of the host service provider **130**.

[0085] The query generated by the processor circuit **46** executing the app store portal **18** to the APIs **138** can specify the selected generic service requirements that are needed for the one virtualized network service (e.g., Netflix Open Connect) **136**; the query also can include a request for an identification of available deployment locations within the network infrastructure **34**.

[0086] As described previously, the orchestrator **12** of the host service provider **130** can respond to the query with a response that enables the processor circuit **46** executing the app store portal **18** to generate the service request **14** for deployment of the chosen virtualized network service **136**. Hence, the processor circuit **46** executing the app store portal **18** in operation **158** can receive, from the prescribed application programming interface **138**, the available deployment locations, the virtualized network functions required by the host service provider **130** (e.g., **58**, **66**, **68**, **69**, **71**, **72** of FIG. **3**) for implementation of the one virtualized network service, and policies required by the host service provider for the one virtualized network service **136** (e.g., WebEx **54** of FIG. **2**), enabling the app store portal **18** to create in operation **160** the service request **14** for deployment of the one virtualized network service at the selected deployment locations.

[0087] The processor circuit **46** executing the app store portal **18** in operation **160** can generate the service request **14** based on information specified in the original service container uploaded by the developer **28** and/or **132**, any request parameters from the request from the consumer **134**, and any response from the API **138** of the host service provider **130**. As illustrated in FIG. **8**, the service request **14** can be for deployment of any one of a third party virtual private service chain **162**, a Software as a Service (SaaS) application **164**, and/or a third party application **166**. The app store portal **18** in operation **160** can identify the required virtualized network functions (e.g., **58**, **66**, **68**, **69**, **71**, **72** of FIG. **3**) to be specified in the service request **14**, for example from the response output by the APIs **138**; the app store portal **18** thus can create SDN service chains **162** with associated policies based on the standardized interfaces prescribed by the APIs **138** (e.g., INF, SDN, etc.). The app store portal **18** also can specify, in the service request **14**, selected deployment locations from among the available deployment locations identified in the response from the APIs **138**, and can specify any necessary host service provider policies, for example load balancing policies for distributing network traffic across multiple physical and/or logical boundaries, firewall policies, security and/or billing policies, etc. The app store portal also can add any additional MANO events, instructions, etc., necessary for deployment of the host service provider **130**.

[0088] The processor circuit **46** executing the app store portal **18** outputs in operation **160** the service request **14**, via the wide area network **140**, to the web service APIs of the host service provider **130**, enabling the orchestrator **12** of the host service provider **130** to deploy the selected one virtualized network service **136** as described above with respect to FIGS. **1-7**. If the orchestrator **12** determines that any one of the virtualized network functions is not available (e.g., a virtual firewall is not available for the selected one virtualized network service **136**), the orchestrator **12** can send an alert to the app store portal **18** that the request specified in the service container **18** cannot be deployed (alternately the alert can be sent by the API **138** as part of the response received by the app store portal **18** in operation **158**).

[0089] According to example embodiments, an app store portal provides a "point-and-click" deployment of third-party virtualized network functions to one of multiple available host service providers, based on standardized interfaces (e.g., ETSI NFV ISG interfaces in MANO, INF, and/or SWA working groups) that enable worldwide distribution of virtualized network functions in service provider networks. The "point-and-click" deployment of third-party virtualized network functions can be applied to multiple logical and/or physical locations within a virtualized infrastructure in a host service provider **130** that can utilize various software defined network technologies, including Infrastructure as a Service (IaaS), Platform as a Service (PaaS), and Software as a Service (SaaS) service models, virtual private service chains, etc.

[0090] While the example embodiments in the present disclosure have been described in connection with what is presently considered to be the best mode for carrying out the subject matter specified in the appended claims, it is to be understood that the example embodiments are only illustrative, and are not to restrict the subject matter specified in the appended claims.

What is claimed is:

1. A method comprising:

receiving by an apparatus, via a wide area network, a request for deployment of a selected one of available virtualized network services advertised by the apparatus, the request identifying a host service provider to deploy the one virtualized network service;

identifying, by the apparatus, virtualized network functions required by the host service provider for implementation of the one virtualized network service, each virtualized network function having a corresponding and distinct virtualized container specifying attributes for defining execution of the corresponding virtualized network function within one or more physical machines of the host service provider; and

sending to the host service provider, by the apparatus, a service container specifying instructions for deploying the one virtualized network service, the service container including instructions for deploying the virtual-

ized network functions as interdependent for implementation of the one virtualized network service by the host service provider.

2. The method of claim **1**, further comprising:

the apparatus choosing selected deployment locations for execution of the one virtualized network service, from among identified available deployment locations within the host service provider;

the service container specifying the selected deployment locations for the one virtualized network service.

3. The method of claim **2**, further comprising:

determining, from a set of generic service requirements, selected generic service requirements for deployment of the one virtualized network service;

sending, to a prescribed application programming interface of the host service provider, the selected generic requirements for the one virtualized network service; and

receiving, from the prescribed application programming interface, the available deployment locations, the virtualized network functions required by the host service provider for implementation of the one virtualized network service, and policies required by the host service provider for the one virtualized network service, enabling the apparatus to create the service container for deployment of the one virtualized network service at the selected deployment locations.

4. The method of claim **3**, wherein the selected generic requirements are sent by the apparatus, via the wide area network, to a prescribed web-based portal providing the prescribed application programming interface.

5. The method of claim **1**, further comprising:

outputting, to a service vendor offering an offered virtualized network service, prescribed certification requirements for advertisement and distribution of the offered virtualized network service among the available virtualized network services; and

accepting from the service vendor, for the advertisement among the available virtualized network services, a corresponding service container defining the offered virtualized network service, based on determining the offered virtualized network service and the service vendor comply with the certification requirements.

6. The method of claim **1**, further comprising:

receiving, from a user via the wide area network, a request of the available virtualized network services advertised by the apparatus;

determining, from the request, the host service provider utilized by the user from among available service providers; and

sending, to the user, a listing of only the available virtualized network services that are authorized by the host service provider.

7. The method of claim **1**, further comprising the apparatus advertising the available virtualized network services using a web-based portal service reachable via the wide area network.

8. The method of claim **1**, further comprising:

determining, from a set of generic service requirements, selected generic service requirements for deployment of the one virtualized network service;

sending, to a prescribed application programming interface of the host service provider, the selected generic requirements for the one virtualized network service; and

receiving, from the prescribed application programming interface, available deployment locations, the virtualized network functions required by the host service provider for implementation of the one virtualized network service, and policies required by the host service provider for the one virtualized network service, enabling the apparatus to create the service container for deployment of the one virtualized network service at selected deployment locations among the available deployment locations.

9. An apparatus implemented as a physical machine, the apparatus comprising:

non-transitory machine readable media configured for storing executable machine readable code;

a device interface circuit configured for receiving a request via a wide area network; and

a processor circuit configured for executing the machine readable code, and when executing the machine readable code operable for:

determining the request is for deployment of a selected one of available virtualized network services advertised by the apparatus, the request identifying a host service provider to deploy the one virtualized network service,

identifying virtualized network functions required by the host service provider for implementation of the one virtualized network service, each virtualized network function having a corresponding and distinct virtualized container specifying attributes for defining execution of the corresponding virtualized network function within one or more physical machines of the host service provider, and

sending to the host service provider, via the device interface circuit, a service container specifying instructions for deploying the one virtualized network service, the service container including instructions for deploying the virtualized network functions as interdependent for implementation of the one virtualized network service by the host service provider.

10. The apparatus of claim **9**, wherein the processor circuit is further configured for choosing selected deployment locations, for execution of the one virtualized network service, from among identified available deployment locations within the host service provider, the service container specifying the selected deployment locations for the one virtualized network service.

11. The apparatus of claim **10**, wherein the processor circuit is further configured for:

determining, from a set of generic service requirements, selected generic service requirements for deployment of the one virtualized network service;

sending, to a prescribed application programming interface of the host service provider, the selected generic requirements for the one virtualized network service; and

receiving, from the prescribed application programming interface, the available deployment locations, the virtualized network functions required by the host service provider for implementation of the one virtualized network service, and policies required by the host service provider for the one virtualized network service,

enabling the apparatus to create the service container for deployment of the one virtualized network service at the selected deployment locations.

12. The apparatus of claim **11**, wherein the selected generic requirements are sent by the apparatus, via the wide area network, to a prescribed web-based portal providing the prescribed application programming interface.

13. The apparatus of claim **9**, wherein the processor circuit is further configured for:

outputting, to a service vendor offering an offered virtualized network service, prescribed certification requirements for advertisement and distribution of the offered virtualized network service among the available virtualized network services; and

accepting from the service vendor, for the advertisement among the available virtualized network services, a corresponding service container defining the offered virtualized network service, based on determining the offered virtualized network service and the service vendor comply with the certification requirements.

14. The apparatus of claim **9**, wherein the processor circuit is further configured for:

receiving, from a user via the wide area network, a request of the available virtualized network services advertised by the apparatus;

determining, from the request, the host service provider utilized by the user from among available service providers; and

sending, to the user, a listing of only the available virtualized network services that are authorized by the host service provider.

15. The apparatus of claim **9**, wherein the processor circuit is further configured for advertising the available virtualized network services using a web-based portal service reachable via the wide area network.

16. The apparatus of claim **9**, wherein the processor circuit is further configured for:

determining, from a set of generic service requirements, selected generic service requirements for deployment of the one virtualized network service;

sending, to a prescribed application programming interface of the host service provider, the selected generic requirements for the one virtualized network service; and

receiving, from the prescribed application programming interface, available deployment locations, the virtualized network functions required by the host service provider for implementation of the one virtualized network service, and policies required by the host service provider for the one virtualized network service, enabling the apparatus to create the service container for deployment of the one virtualized network service at selected deployment locations among the available deployment locations.

17. Logic encoded in one or more non-transitory tangible media for execution by a physical machine and when executed by the physical machine operable for:

receiving, via a wide area network, a request for deployment of a selected one of available virtualized network services advertised by the apparatus, the request identifying a host service provider to deploy the one virtualized network service;

identifying virtualized network functions required by the host service provider for implementation of the one virtualized network service, each virtualized network function having a corresponding and distinct virtualized container specifying attributes for defining execution of the corresponding virtualized network function within one or more physical machines of the host service provider; and

sending to the host service provider a service container specifying instructions for deploying the one virtualized network service, the service container including instructions for deploying the virtualized network functions as interdependent for implementation of the one virtualized network service by the host service provider.

18. The logic of claim **17**, when executed by the machine further operable for choosing selected deployment locations, for execution of the one virtualized network service, from among identified available deployment locations within the host service, the service container specifying the selected deployment locations for the one virtualized network service.

19. The logic of claim **17**, when executed by the machine further operable for:

outputting, to a service vendor offering an offered virtualized network service, prescribed certification requirements for advertisement and distribution of the offered virtualized network service among the available virtualized network services; and

accepting from the service vendor, for the advertisement among the available virtualized network services, a corresponding service container defining the offered virtualized network service, based on determining the offered virtualized network service and the service vendor comply with the certification requirements.

20. The logic of claim **17**, when executed by the machine further operable for:

determining, from a set of generic service requirements, selected generic service requirements for deployment of the one virtualized network service;

sending, to a prescribed application programming interface of the host service provider, the selected generic requirements for the one virtualized network service; and

receiving, from the prescribed application programming interface, available deployment locations, the virtualized network functions required by the host service provider for implementation of the one virtualized network service, and policies required by the host service provider for the one virtualized network service, enabling creation of the service container for deployment of the one virtualized network service at selected deployment locations among the available deployment locations.

* * * * *