UNITED STATES PATENT AND TRADEMARK OFFICE

BEFORE THE PATENT TRIAL AND APPEAL BOARD

RUCKUS WIRELESS, INC., BELKIN INTERNATIONAL, INC.,
AMAZON.COM, INC., NETGEAR, INC., AND ROKU, INC.
Petitioners

v.

HERA WIRELESS S.A.,
Patent Owner

Case: Unassigned

PETITION FOR *INTER PARTES* REVIEW OF U.S. PATENT NO. 8,295,400

Mail Stop PATENT BOARD
Patent Trial and Appeal Board
United States Patent and Trademark Office
PO Box 1450
Alexandria, Virginia 22313–1450

Submitted Electronically via the Patent Trial and Appeal Board End to End (PTAB E2E) System

TABLE OF CONTENTS

Page

I. INTRODUCTION ..... 1~~1~~

II. MANDATORY NOTICES – 37 C.F.R. §42.8 2

A. Real Parties-In-Interest Under 37 C.F.R. §42.8(b)(1): 2

B. Related Matters Under 37 C.F.R. §42.8(b)(2) 2

C. Lead and Back-Up Counsel Under 37 C.F.R. §42.8(b)(3) ..... 3~~3~~

D. Service Information Under 37 C.F.R. §42.8(b)(4) ..... 4~~4~~

III. PAYMENT OF FEES – 37 C.F.R. §42.103 ..... 4~~4~~

IV. GROUNDS FOR STANDING UNDER 37 C.F.R. §42.104(a) ..... 4~~4~~

V. RELIEF REQUESTED ..... 5~~5~~

VI. REASONS FOR REQUESTED RELIEF ..... 5~~5~~

A. State of the Art and Development of the 802.11n Standard ..... 5~~5~~

1. IEEE 802.11 Wi-Fi Standards ..... 5~~5~~

2. The IEEE Improves the 802.11a Standard ..... 9~~9~~

3. MIMO ..... 9~~9~~

4. Backward Compatibility ..... 10~~10~~

B. WWISE Proposal to TGn ..... 10~~10~~

C. *TGn-Sync* Proposal to TGn ..... 14~~14~~

D. Public Accessibility of *WWiSE* and *TGn-Sync* Proposals ..... 18~~18~~

E. Summary of the ’400 Patent ..... 19~~19~~

F. Prosecution History of the ’400 Patent ..... 24~~24~~

G. Level of Ordinary Skill in the Art ..... 25~~25~~

H. Claim Construction ..... 25~~25~~

VII. IDENTIFICATION OF HOW THE CLAIMS ARE UNPATENTABLE ..... 26~~26~~

A. Challenged Claims ..... 26~~26~~

B. Statutory Grounds for Challenges ..... 26~~26~~

VIII. GROUND 1: CLAIMS 1-2 ARE OBVIOUS OVER *WWISE* IN VIEW OF 802.11a ..... 28~~28~~

A. Motivation to Combine WWISE and 802.11a ..... 28~~28~~

B. Claim 1 ..... 28~~28~~

C. Claim 2 ..... 39~~39~~

IX. GROUND 2: CLAIMS 1-2 ARE OBVIOUS IN VIEW OF *TGN-SYNC* IN VIEW OF 802.11a ..... 40~~40~~

A. Motivation to Combine *TGn-Sync* and 802.11a ..... 40~~40~~

B. Claim 1 ..... 41~~41~~

C. Claim 2 ..... 49~~49~~

X. GROUND 3: CLAIMS 1-2 ARE OBVIOUS IN VIEW OF *NARASIMHAN* IN VIEW OF *VAN ZELST* ..... 50~~50~~

A. *Narasimhan* Overview ..... 50~~50~~

B. *Van Zelst* Overview ..... 55~~55~~

1. *Van Zelst* Priority Date ..... 57~~57~~

C. Motivation to Combine *Narasimhan* and *Van Zelst* ..... 59~~59~~

D. Claim 1 ..... 63~~63~~

E. Claim 2 ..... 70~~70~~

XI. Exercise of Discretion under §325(d) not Warranted ..... 71~~71~~

XII. CONCLUSION ..... 74~~74~~

PETITIONER'S EXHIBIT LIST

Ex. No.	Brief Description
AR-1001	U.S. Patent. 8,295,400 to Nakao ("'400 Patent")
AR-1002	Declaration of Christopher J. Hansen
AR-1003	Prosecution History for U.S. Patent No. 8,295,400
AR-1004	"WWiSE Proposal: High throughput extension to the 802.11 Standard," IEEE 802.11-04/0886r0, IEEE P802.11 Wireless LANs, Aug. 13, 2004, 1-78
AR-1005	IEEE Computer Society, "Supplement to IEEE Standard on Information Technology-Telecommunications and Information Exchange Between Systems-Local and Metropolitan Area Networks-Specific Requirements-Part 11: Wireless LAN Medium Access Control (MAC) and Physical Layer (PHY) Specifications: High-speed Physical Layer in the 5 GHz Band," IEEE Std802.11a – 1999 (Supplement to IEEE Std 802.11-1999)
AR-1006	U.S. Patent No. 7,995,455 ("Narasimhan")
AR-1007	U.S. Patent No. 7,372,913 ("Van Zelst")
AR-1008	"TGn Sync Proposal Technical Specification," IEEE 802.11-04/0889r0, IEEE P802.11 Wireless LANs, Aug. 13, 2004, 1-135.
AR-1009	U.S. Patent Application No. 60/590,615 ("Van Zelst Provisional")
AR-1010	IEEE Computer Society, "Information Technology-Telecommunications and Information Exchange Between Systems-Local and Metropolitan Area Networks-Specific Requirements-Part 11: Wireless LAN Medium Access Control (MAC) and Physical Layer (PHY) Specifications," IEEE Std 802.11-First Edition, 1999
AR-1011	Jones, V. K. et al, "Interest for HDR Extension to 802.11a," IEEE 802.11092/081r0 (January 2002)
AR-1012	Stephens, A. "802.11 TGn Functional Requirements," IEEE 802.11-03/813r1 (October 21, 2003)

Ex. No.	Brief Description
AR-1013	Kraemer, B. “Call for Proposals for P802.11n,” IEEE 802.11-03/858r6 (May 17, 2004)
AR-1014	Stephens, A. “IEEE 802.11 TGn Comparison Criteria,” IEEE 802.11-03/814r31 (July 12, 2004)
AR-1015	Boer, J. et al, “Backward Compatibility: How to make a MIMO-OFDM system backwards compatible and coexistence with 11a/g at the link level,” IEEE 802.11-03/714r0 (September 2003)
AR-1016	Aoki, T. et al, “New preamble structure for AGC in a MIMO-OFDM system,” IEEE 802.11-04/046r1 (January 2004)
AR-1017	Becher, R. et al, “Broad-Band Wireless Access and Future Communication Networks,” 89 Proc. IEEE No. 1 58-75 (Jan. 2001)
AR-1018	Excerpts from Van Nee, R. et al, “OFDM for Wireless Multimedia Communications, ” Artech House (2000)
AR-1019	Hansen, C., et al, "WWiSE Proposal Reponse to Functional Requirements and Comparison Criteria", IEEE 802.11-04/877r1 (August 13, 2004)
AR-1020	D. Gore, et al, "Delay Diversity Codes for Frequency Selective Channels", Proceedings of the 2002 IEEE International Conference on Communications.
AR-1021	Y. Li, et al, "Transmitter Diversity for OFDM Systems and Its Impact on High-Rate Data Wireless Networks", IEEE J-SAC, Vol. 17, No. 7, pp1233-1243.
AR-1022	A. Huebner, et al, "A Simple Space-Frequency Coding Scheme with Cyclic Delay Diversity for OFDM", 2003 5th European Personal Mobile Communications Conference.
AR-1023	J. Barry, et al, "Digital Communication, 3rd Edition," Springer 2004.
AR-1024	T. Rappaport, "Wireless Communications, Principles and Practice," Prentice-Hall, 1996.

Ex. No.	Brief Description
AR-1025	Petrick, A., et al "New Participant Orientation," IEEE 802.11-04/422r3 (July 12, 2004)
AR-1026	Petrick, A., et al, "Electronic Attendance and Server Update," IEEE 802.11-03-044r6
AR-1027	Compilation of Summons and Notices of Service
AR-1028	IEEE Computer Society, "Information Technology-Telecommunications and Information Exchange Between Systems-Local and Metropolitan Area Networks-Specific Requirements-Part 11: Wireless LAN Medium Access Control (MAC) and Physical Layer (PHY) Specifications, Amendment 4: Further Higher Data Rate Extension in the 2.4 GHz Band" IEEE Std 802.11g-2003
AR-1029	Ketchum J., et al, "System Description and Operating Principles for High Throughput Enhancements to 802.11," IEEE 802.11-04/0870r0, IEEE P802.11 Wireless LANs, Aug. 13, 2004, pp. 1-148
AR-1030	Bradner, Scott. "Faster than you need is not fast enough." Network World. Network World Inc./IDG. 2004, pg. 22, also available at https://www.networkworld.com/article/2324669/network-security/faster-than-you-need-is-not-fast-enough.html

I. INTRODUCTION

U.S. Patent No. 8,295,400 ("'400 Patent," AR-1001) describes "a radio unit" that receives burst signals in either "MIMO system" or "target system" format and determines if the signal corresponds to a MIMO system or target system. AR-1001: 1:58-2:2. Target systems are described as 802.11a wireless systems, and MIMO systems are described as multi-antenna systems, such as those being considered by "Task Group n" ("TGn") of the IEEE Standards Association 802.11 Working Group. AR-1001: 9:67-10:4. Claim 1 is directed to a transmitting apparatus in an Orthogonal Frequency Division Multiplexing (OFDM) system that: a) generates a burst signal in a MIMO system format where the MIMO signal incorporates the preamble of the target system, b) incorporates pilot signals on the same frequencies as the target system and with the same modulation but with different pilot signal patterns, and c) applies cyclic shifts for transmissions from different antennas.

At the time of the alleged invention of the '400 Patent, however, the problem the '400 Patent purports to solve was a focus of TGn. A key functional requirement for TGn was backward compatibility with the 802.11a standard, and the approach that had repeatedly been proposed was to use backward-compatible preambles. The references cited in this petition include proposals to TGn that described backward compatible message formats that incorporate the 802.11a message preamble, the

same pilot signal structure as the ’400 Patent, and that applied cyclic shifts to transmissions from different antennas.

Pursuant to 35 U.S.C. §§311, 314(a), and 37 C.F.R. §42.11, in view of the prior art and arguments cited herein, Ruckus Wireless, Inc., Amazon.com, Inc., Netgear, Inc., Roku, Inc., and Belkin International, Inc. (collectively “Petitioners”) respectfully request that the Board review and cancel as unpatentable under pre-AIA 35 U.S.C. §103(a) claims 1-2 (the “Challenged Claims”) of the ’400 Patent.

II. MANDATORY NOTICES – 37 C.F.R. §42.8

A. Real Parties-In-Interest Under 37 C.F.R. §42.8(b)(1):

Petitioners include Ruckus Wireless, Inc., Belkin International, Inc., Amazon.com, Inc., Netgear, Inc., and Roku, Inc. Out of an abundance of caution, Petitioners also identify ARRIS International plc, ARRIS Enterprises LLC, and ARRIS Solutions, Inc. as real-parties-in-interest.[1]

B. Related Matters Under 37 C.F.R. §42.8(b)(2)

To Petitioners’ knowledge, the ’400 Patent is involved in the following cases:

Style	Number	Tribunal	Filed
Hera Wireless S.A. et al v. Amazon.com, Inc.	1:17-cv-00947	D. Del.	July 14, 2017

[1] Although ARRIS Group, Inc. is identified as a defendant below, ARRIS Group, Inc. was merged into Ruckus Wireless, Inc. and, therefore, no longer exists.

Style	Number	Tribunal	Filed
Hera Wireless S.A. et al v. ARRIS Group, Inc.	1:17-cv-00948	D. Del.	July 14, 2017
Hera Wireless S.A. et al v. Belkin International, Inc.	1:17-cv-00949	D. Del.	July 14, 2017
Hera Wireless S.A. et al v. Buffalo Americas, Inc.	1:17-cv-00950	D. Del.	July 14, 2017
Hera Wireless S.A. et al v. NETGEAR, Inc.	1:17-cv-00951	D. Del.	July 14, 2017
Hera Wireless S.A. et al v. Roku, Inc.	1:17-cv-00952	D. Del.	July 14, 2017
Hera Wireless S.A. et al v. Lenovo Holding Company, Inc. et al	1:17-cv-01088	D. Del.	August 4, 2017
Hera Wireless S.A. et al v. LG Electronics, Inc. et al	1:17-cv-01089	D. Del	August 4, 2017

C. Lead and Back-Up Counsel Under 37 C.F.R. §42.8(b)(3)

Lead Counsel	Back-Up Counsel
Christopher J. Tyson (Reg. No. 63,850) cjtyson@duanemorris.com DUANE MORRIS LLP 505 9th Street NW, Suite 1000 Washington, D.C. 20004 T: (202) 776-7851	Carol Ansley (Reg. No. 76,331) Carol.Ansley@arris.com ARRIS 3871 Lakefield Dr. Suwanee, GA 30024 T: (678) 473-8630 Bryan P. Clark (Reg. No. 60,465) bclark@webblaw.com THE WEBB LAW FIRM 420 Ft. Duquesne Blvd., #1200

	Pittsburgh, PA 15222 T: (412) 471-8815

D. Service Information Under 37 C.F.R. §42.8(b)(4)

Service via hand-delivery may be made at the postal mailing address of either lead or back-up counsel. Petitioner consents to service by e-mail to cjtyson@duanemorris.com and bclark@webblaw.com.

III. PAYMENT OF FEES – 37 C.F.R. §42.103

The required fee is being paid using the PTAB E2E System.

IV. GROUNDS FOR STANDING UNDER 37 C.F.R. §42.104(a)

Petitioners certify that the '400 Patent is available for IPR and that no Petitioner, real party-in-interest, or privy of any Petitioner is estopped from challenging the claims on the grounds identified in this Petition. This Petition is filed within one (1) year of the date on which Petitioners were served with complaints alleging infringement of the '400 Patent.[2] This Petition is filed pursuant to 37 C.F.R. §42.106(a).

---

[2] While the aforementioned cases against Petitioners were filed more than one year before the filing of this Petition, infringement allegations related to the '400 Patent were first made in Amended Complaints that were not authorized under FRCP 15(a) or by the Court, but were served with Summons on each Petitioner on September 14, 2017 (AR-1027). *Motorola Mobility LLC v. Arnouse*, IPR2013-

V. RELIEF REQUESTED

Petitioners respectfully request institution of an *inter partes* review pursuant to 37 C.F.R. §42.108 and cancellation of the Challenged Claims of the '400 Patent.

VI. REASONS FOR REQUESTED RELIEF

A. State of the Art and Development of the 802.11n Standard

1. IEEE 802.11 Wi-Fi Standards

The IEEE 802.11 standard contains the medium access control ("MAC") and physical layer ("PHY") specifications for wireless connectivity in a local area network, collectively defining the technology known as "Wi-Fi." AR-1010: p.1.[3] The PHY, which is particularly applicable here, serves two functions:

- a Physical Medium Dependent (PMD) system defining the characteristics of and the method of communicating using a wireless medium, AND
- a Physical Layer Convergence function that adapted the PMD system to the PHY. This was done by a Physical Layer Convergence Procedure ("PLCP") mapping MAC information to a frame format suitable for

---

00010 (Jan. 30, 2013); *TRW Automotive US LLC v. Magna Elec., Inc.*, IPR2014-00293, 2014 WL 7474150 (June 27, 2014).

[3]AR-1010 is 802.11-1999.

> communicating user data and management information between two or more devices using data frames transmitted as bursts called PLCP protocol data units ("PPDUs").

AR-1010: p.138; AR-1002 ¶ 52.

Initial versions of 802.11 disclosed a PHY using radio frequency ("RF") signals in the 2.4GHz band. AR-1010: p.vii. The PHY used Frequency Hopping Spread Spectrum and Direct Sequence Spread Spectrum transmission techniques. AR-1010: p.vii.

In 1999, the IEEE adopted a higher throughput amendment to 802.11 known as amendment "a" (AR-1005, "802.11a") that used OFDM in the 5GHz band. AR-1005: p.3; AR-1002 ¶¶ 56,140. OFDM is a well-known multicarrier modulation scheme in which the data to be transmitted is multiplexed over multiple contiguous frequency signals, or subcarriers. AR-1002 ¶ 57. 802.11a used 52 subcarriers on which data was modulated using binary or quadrature phase shift keying (BPSK/QPSK), 16-quadrature amplitude modulation (16-QAM), or 64-QAM for each data burst, as illustrated below. AR-1005: p.3; AR-1002 ¶¶ 62-63,153.

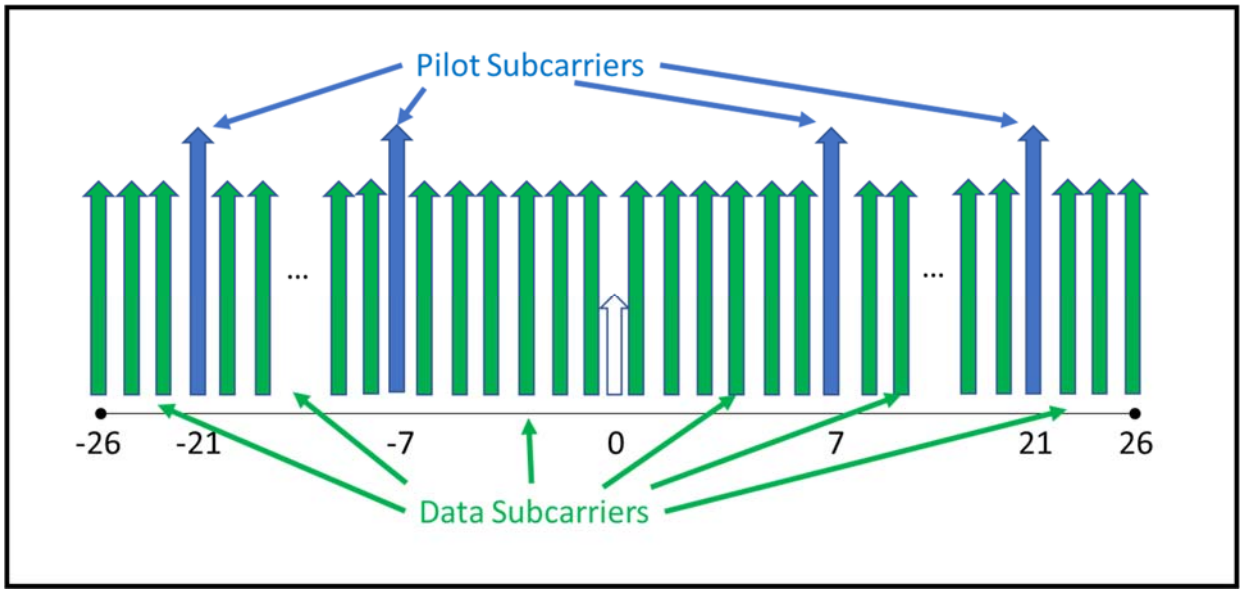

Wireless transmissions using OFDM typically experience random phase and amplitude variations caused by, for example, channel response, oscillator drift, and timing offsets. AR-1002 ¶¶ 68-70. A receiver can cope with these unknown variations by comparing what is received against a known signal. AR-1002 ¶¶ 66-68. 802.11a uses a hybrid approach: known training sequences sent at the beginning of every transmission for channel estimation and initial training, and known "pilot signal" sequences transmitted on dedicated subcarriers throughout the transmission to track frequency offsets. AR-1002 ¶¶ 66,68. The pilot signals for 802.11a are sent over subcarriers -21, -7, 7 and 21 as shown in the figure above and the pilot signal in subcarrier 21 is the inverse of those sent over subcarriers -21, -7 and 7. AR-1005: p.22. The pilot signals are sent at fixed frequencies using the lowest order of modulation, *i.e.*, BPSK modulation, to ensure that the receiver can recognize them reliably. AR-1002 ¶ 63.

The sequence of pilot signals is multiplied by a pseudorandom sequence defined in 802.11a, where each sequence element is used for one OFDM symbol, and the first sequence element p0 multiplies the pilot subcarriers of the SIGNAL symbol. AR-1005: p.23. AR-1002 ¶¶ 154-155. The resulting pilot sequences for the first eight OFDM symbols are:

OFDM Symbol								
	SIGNAL	Data						
Subcarrier	0	1	2	3	4	5	6	7
-21	1	1	1	1	-1	-1	-1	1
-7	1	1	1	1	-1	-1	-1	1
7	1	1	1	1	-1	-1	-1	1
21	-1	-1	-1	-1	1	1	1	-1

AR-1002 ¶ 156.

Turning to the content of the data subcarriers, Figure 107 shows the frame format for an 802.11a PPDU transmission which was transmitted as a burst. AR-1002 ¶ 143,47.

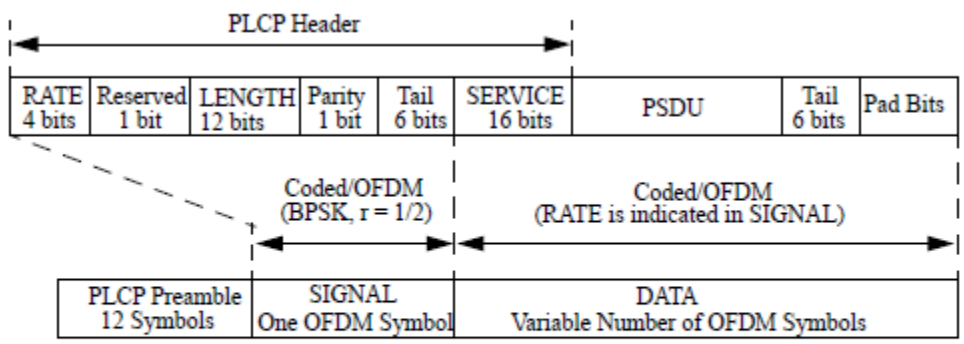

Figure 107—PPDU frame format

AR-1005: p.7. The frame includes a PLCP Preamble that consists of short training sequences used for automatic gain control, diversity selection, timing acquisition, and coarse frequency estimation, followed by long training sequences used for channel acquisition and fine frequency estimation. AR-1005: p.7. The frame also includes (i) a SIGNAL field with RATE and LENGTH subfields that was modulated using BPSK followed by (ii) DATA. AR-1005: p.8.

2. The IEEE Improves the 802.11a Standard

802.11a (and the 2003 amendment "g" that incorporated the OFDM PHY in the 2.4GHz band) provided a maximum data rates of 54Mbps. AR-1005: p.3; AR-1028: p.15. Interest in a faster data rate extension was proposed to the IEEE in 2002. AR-1011: pp.1-4; AR-1002 ¶85. This ultimately led to the creation of TGn, which was responsible for developing what ultimately became the "n" amendment to 802.11. AR-1002 ¶86. TGn issued a call for proposals on May 17, 2004, with proposals due on August 13, 2004 and presented at meetings beginning September 12, 2004. AR-1013: pp.1, 3.

3. MIMO

All of the primary proposals submitted to TGn included a multiple-antenna concept known as multiple-input-multiple-output or "MIMO." AR-1004: p.28; AR-1008: p.3. MIMO systems were well-known prior to the creation of TGn and included multiple transmit antennas that could broadcast a signal in the same

frequency and timeslot at the same time to a single receiver, which had multiple receive antennas. AR-1017: p.64; AR-1002 ¶ 84. This transmission of several different data streams (or "spatial streams") in parallel may increase the overall data rate when combined with other improvements. AR-1017: p.64; AR-1002 ¶ 84.

4. Backward Compatibility

Backward Compatibility means a system can transmit/receive a signal to/from a legacy system, *i.e.* including an 802.11a or g transmitter and/or receiver. AR-1015: p.3; AR-1002 ¶ 87. A legacy receiver had to be capable of detecting the start of a higher-order transmission, *i.e.* from a MIMO transmitter, and not transmit while such transmission was on-going. AR-1002 ¶ 88; AR-1015: p.4. A legacy receiver also had to be capable of detecting the message preamble of a higher-order transmission, including the length field to know the duration for which it could not transmit. AR-1002 ¶ 88; AR-1015: p.4. A TGn PPDU transmission frame needed a preamble that complied with these backward compatibility objectives. AR-1015: p.5.

B. WWISE Proposal to TGn

WWiSE stands for World-Wide Spectrum Efficiency, a group that included Airgo Networks, Broadcom, Conexant Systems, STMicroelectronics, Texas Instruments, and others. AR-1002: ¶ 94. WWiSE submitted its High throughput

extension to the 802.11 Standard proposal (AR-1004, "*WWiSE*") to the IEEE's TGn as part of the standardization process for the "n" amendment. AR-1002 ¶ 159,161.

WWiSE discloses a PHY for a MIMO-OFDM System. AR-1004: p.28. The MIMO-OFDM PHY built upon the basic OFDM PHY implemented in 802.11a and added extensions for up to four antenna modes. AR-1004: p.28. *WWiSE* defined frame formats for communication, including support for legacy 802.11a devices via frame formats called "mixed-mode." AR-1004: p.30; AR-1002 ¶ 163. For example, Figure 004 (annotated below) shows mixed mode frame formats for multiple antenna modes, where each frame included a "MIMO-OFDM PLCP Preamble (section 1)", a signal field called "SIGNAL-MM" with rate, length, and parity information, a long training sequence called "MIMO-OFDM PLCP Preamble (section 2)," a signal field with MIMO-OFDM specific information called "SIGNAL-N," training signals called "MIMO-OFDM PLCP Preamble (section 3)," and DATA. AR-1004: p. 32; AR-1002 ¶ 164.

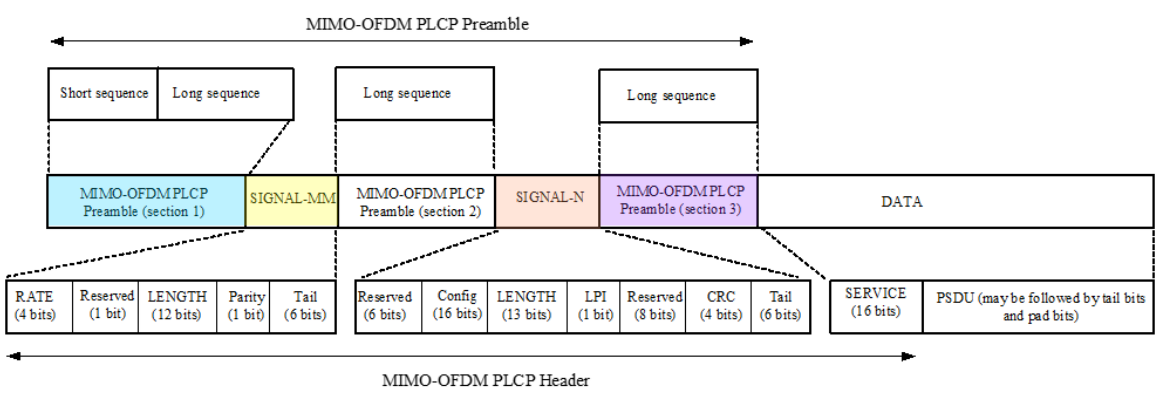

Figure 004– PPDU frame format: Mixed mode access in the 3TX and 4TX modes (20 MHz)

The first MIMO-OFDM PLCP Preamble included short and long training sequences that are the same as those used in 802.11a. AR-1004: p. 37; AR-1002 ¶ 166-168; §VI.A; AR-1005: pp. 12-13. The SIGNAL-MM field followed the long training symbols, was the same as the signal field in 802.11a, and was encoded in the same manner as in subclause 17.3.4 in 802.11a-1999. AR-1004: p. 41; AR-1002 ¶ 169.

Additional long training symbols were transmitted after SIGNAL-MM to provide antenna-specific training information. AR-1004: p. 37; AR-1002 ¶ 170. The SIGNAL-N field followed these training signals and SIGNAL-MM, and contained MIMO-specific information including the number of spatial streams and the number of transmit antennas. AR-1004: pp. 40-41; AR-1002 ¶ 173. Additional long training symbols were transmitted after SIGNAL-N to allow for antenna-specific channel estimation. AR-1004: p. 37; AR-1002 ¶ 170. Data was transmitted after the last set of training signals.

WWiSE disclosed a version of the 802.11a PPDU encoding process that was modified to produce multiple spatial streams, across which data was encoded. AR-1004: p. 33; AR-1002 ¶ 165. Signals transmitted from multiple antennas were shifted in time, and were shifted in a cyclic manner. AR-1004: p. 37; AR-1002 ¶ 172. Figure 10 (annotated below) illustrates mixed-mode transmission from four transmit antennas in the 20MHz bandwidth channels, such that the short training

symbol for each antenna was cyclically shifted by 200ns, and the long training symbol was cyclically shifted by 100ns. AR-1002 ¶ 172.

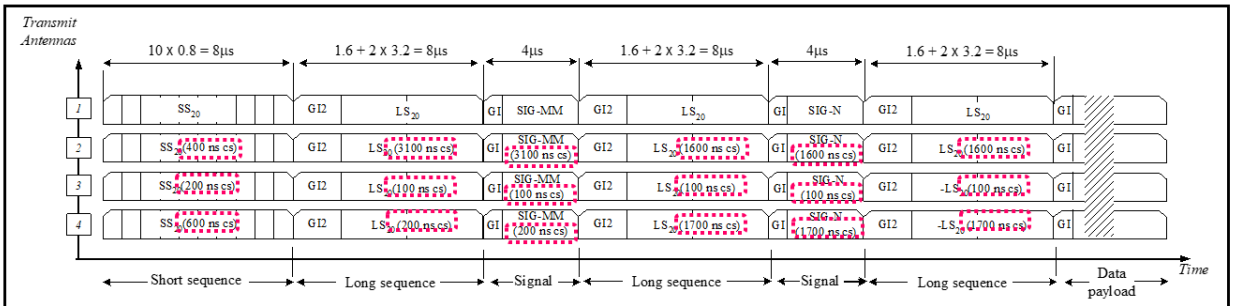

Figure 010 – MIMO-OFDM Training structure for N_{TX} = 3, 4, 20 MHz, mixed mode operation

WWiSE also discloses transmitting pilot tones using subcarriers -21 and 21, which were used in 802.11a 20MHz mode to "increase robustness against frequency offsets and phase noise." The pilot symbols were transmitted sequentially by multiplying the sequence defined in subclause 17.3.5.9 of 802.11a with the matrices determining a multiplier for the sequence (reproduced right). AR-1004: p. 47. Matrix A was used for a two antenna mode and two antennas, Matrix B for a three antenna mode and three antennas, and Matrix C for a four antenna mode and four antennas. AR-1004: pp. 47-48; AR-1002 ¶ 178-181. The pilot values sent from

$$A=\begin{bmatrix} +1 & +1 & +1 & -1 \\ +1 & -1 & +1 & +1 \end{bmatrix}$$

$$B=\begin{bmatrix} +1 & +1 & -1 & -1 \\ +1 & -1 & +1 & -1 \\ -1 & +1 & +1 & -1 \end{bmatrix}$$

$$C=\begin{bmatrix} +1 & +1 & +1 & -1 \\ +1 & +1 & -1 & +1 \\ +1 & -1 & +1 & +1 \\ -1 & +1 & +1 & +1 \end{bmatrix}$$

a given antenna were defined by the below table that mapped to a matrix entry, where *m* was the antenna number and *n* was the OFDM symbol number. AR-1004: p. 47; AR-1002 ¶ 181.

Table 014—Pilot value sent from *m*th antenna during *n*th OFDM symbol in 20 MHz modes

Subcarrier index	2TX mode	3TX mode	4TX mode
-21	$a_{m-1,\, n \bmod 2}$	$b_{m-1,\, n \bmod 4}$	$c_{m-1,\, n \bmod 4}$
+21	$a_{m-1,\, (n+1) \bmod 2}$	$b_{m-1,\, (n+1) \bmod 4}$	$c_{m-1,\, (n+1) \bmod 4}$

These values were multiplied by the sequence in subclause 17.3.5.9 of 802.11a, AR-1004: pp. 47-48, and modulated using the same scheme as in 802.11a. AR-1004: p. 47. Thus, the sequence of pilot tones for antennas 1 and 2 were:

Antenna 1								
	SIG-N					Data		
Subcarrier	0	1	2	3	4	5	6	7
-21	1	1	1	1	-1	-1	-1	1
21	1	1	1	1	-1	-1	-1	1
Antenna 2								
	SIG-N			Data				
Subcarrier	0	1	2	3	4	5	6	7
-21	1	-1	1	-1	-1	1	-1	-1
21	-1	1	-1	1	1	-1	1	1

AR-1002 ¶ 182.

C. *TGn-Sync* Proposal to TGn

TGn-Sync was an industry group that including Atheros, Intel, Nokia, Nortel, Panasonic, Philips, Samsung, Sanyo, Sharp, Sony, and Toshiba. AR-1002: ¶ 214. TGn-Sync submitted a proposal to TGn called "TGn Sync Proposal Technical

Specification" (AR-1008, "*TGn-Sync*") as part of the standardization process for the "n" amendment. AR-1008: p. 16. Similar to *WWiSE*, *TGn-Sync* discloses a MIMO-OFDM PHY that uses spatial division multiplexing, AR-1008: p. 3, and supported "seamless interoperability with 802.11 legacy devices" by "an enhanced 802.11 preamble design." *Id*. This preamble was interoperable with the OFDM preamble from 802.11a/g. AR-1008: p. 17.

Figure 30, annotated below, describes a PPDU format, starting with the legacy 802.11a PLCP Preamble, the legacy SIGNAL ("LSIG") field that included Rate and Length information, a High Throughput ("HT") SIGNAL ("HTSIG") field for MIMO specific information, antenna specific training symbols for MIMO, and Data. AR-1008: p. 79. The Rate and Signal fields in the LSIG were set so that legacy devices would not communicate for the duration of the transmission. AR-1008: pp. 79-80; AR-1002 ¶ 218,223.

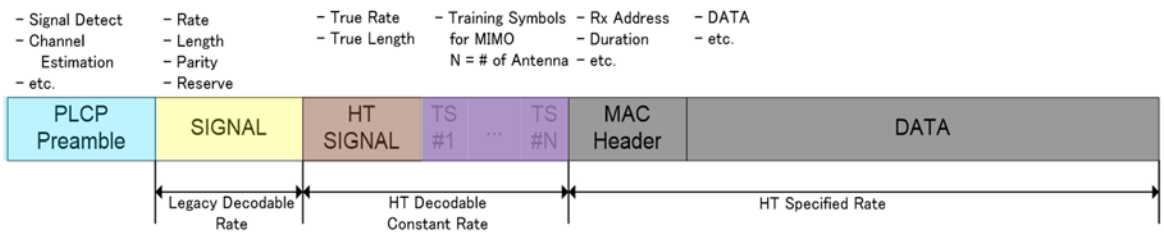

Figure 30 – PPDU Format with Legacy Protection

Annotated Figures 46 shows a MIMO PPDU with the frame format in Figure 30 transmitted using multiple antennas. AR-1008: pp.101. The frames transmitted

from multiple antennas were shifted in time at the receiver, using cyclic delay diversity, as noted in red. AR-1008: p. 101.

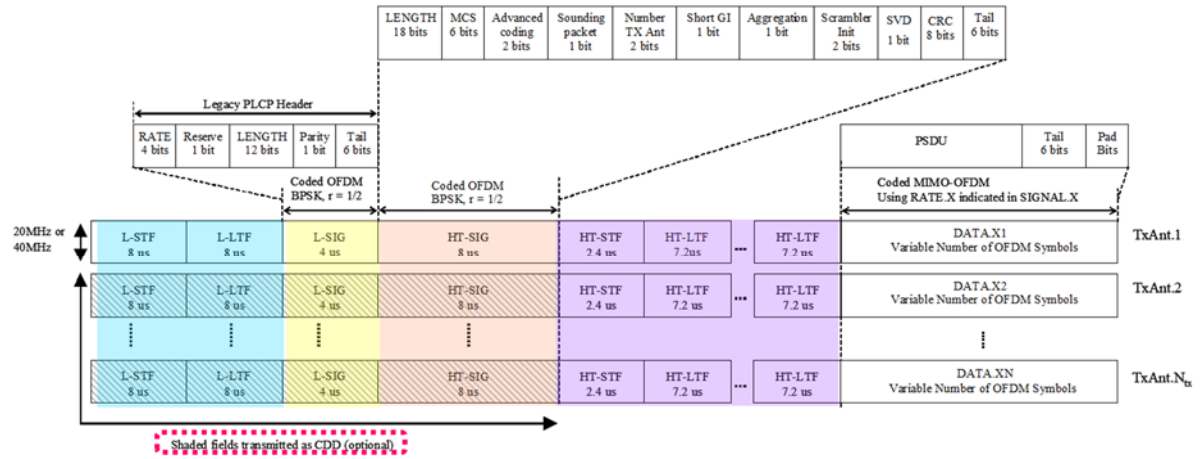

Figure 46: PPDU format leveraging CDD transmission

The legacy short training field has short training symbols "identical to the 802.11a short training symbol." AR-1008: p. 102. The legacy long training symbol was also "identical to the 802.11a long training ODFM symbol." AR-1008: p. 103. The LSIG field followed the long training symbols and had the same format as the SIGNAL field in 802.11a, except that the RATE and LENGTH fields were "spoofed" to prevent legacy stations from accessing the medium during an HT frame transmission. AR-1008: pp. 110-111. The HTSIG followed the LSIG, but was shifted 90 degrees in time so that a frame could autodetect whether a received frame was legacy or HT. AR-108: p. 110. The HTSIG contained information including the number of spatial streams. AR-1008: pp. 112-114. An HT short training field ("HT-STF") followed the HTSIG, and was sent to "fine tune" for "HT MIMO

reception." AR-1008: p. 104. Multiple HT Long Training Fields ("HT-LTFs") followed the HT-STF, with the number of HT-LTFs equal to the number of spatial streams. AR-1008: p. 105. The DATA field followed the HT-LTFs. AR-1008: p. 100.

TGn-Sync discloses a block diagram and accompanying description for a two-antenna transmitter that generates and transmits the burst signal described above. AR-1008: pp. 123-124; AR-1002 ¶ 219,227.

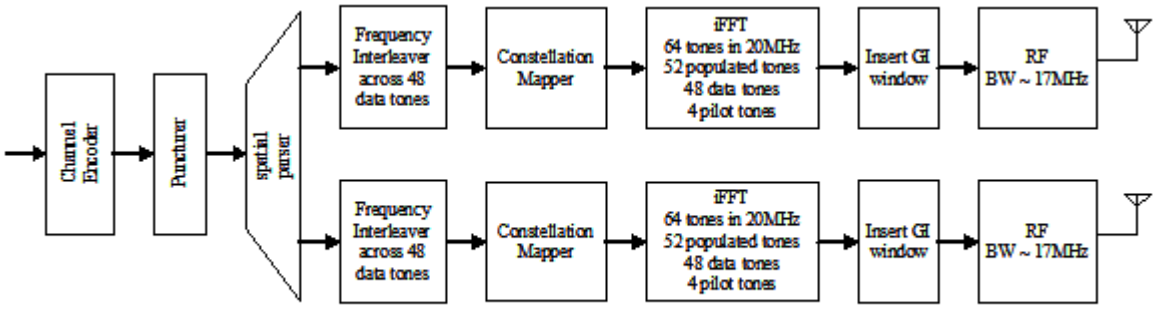

Figure 35: Transmitter Datapath for 2-antenna MIMO in 20MHz

During the generation of the signal, pilot signals are inserted during the iFFT process in the iFFT block above. AR-1002 ¶ 231. *TGn-Sync* discloses using the same subcarriers as 802.11a when operating in 20MHz mode. AR-1008: pp. 122-123; AR-1002 ¶ 231. In legacy mode, pilot signals were the same as in 802.11a. AR-1008: p. 123. In HT-mode, pilot signals were defined by multiplying the sequence in equation (25) of 802.11a by an additional sequence described in equations 47 and 48 of *TGn-Sync*. AR-1008: p. 123. A POSITA would understand that for a four

transmit antenna system, the pilot symbol sequence resulting from this multiplication would be as follows for antennas 1 and 3:

Subcarrier				
Antenna	-21	-7	7	21
1	1	1	1	-1
3	1	-1	1	1

AR-1002 ¶¶ 232-235.

D. Public Accessibility of *WWiSE* and *TGn-Sync* Proposals

WWiSE and *TGn-Sync* were publicly accessible at least as early as August 13, 2004. AR-1002 ¶¶ 159,214. *WWiSE* and *TGn-Sync* were uploaded to the 802.11 Working Group ("WG") server, http://802wirelessworld.com, on August 13, 2004,[4] and are prior art under 35 U.S.C. §§102(a) and (b). AR-1002 ¶ 108. *WWiSE* and *TGn-Sync* were uploaded in response to the public call for proposals issued in May 2004. AR-1002 ¶ 108. *WWiSE* and *TGn-Sync* were well-known given the breadth of interest in the IEEE and its Wi-Fi standards and because they were discussed in prominent industry publications, such as an August 23, 2004 article in Network World magazine. AR-1030.

Any member of the public could register for free at https://802wirelessworld.com to view *WWiSE* and *TGn-Sync*. AR-1002: ¶ 101; AR-1025: slides 25-35. These submissions also could be accessed via the WG FTP

[4] AR-1002: ¶ 108; AR-1013: p. 1. (call for proposals).

server, ftp.802wirelessworld.com, and credentials for the server were available on the 802wirelessworld.com website and also handed out at WG meetings. AR-1025: slide 35; AR-1002 ¶ 104. Any member of the public interested in the submissions to the WG could access those submissions via either FTP or 802wirelessworld.com. AR-1002 ¶¶ 103-104; AR-1025: slide 35. Petitioners' expert, Dr. Hansen, was one of the authors of the *WWiSE* proposal, and downloaded both *WWiSE* and *TGn-Sync* the day they were uploaded to 802wirelessworld.com, August 13, 2004. AR-1002 ¶ 108. The current WG website, https://mentor.ieee.org/802.11/documents, where any member of the public can download documents submitted to the WG, retains all the original document titles, authors, document number, and original upload dates. AR-1002 ¶¶ 111-112.

For at least these reasons, *WWiSE* and *TGn-Sync* were publicly accessible at least as early as August 13, 2004 to a POSITA exercising reasonable diligence. *Gopro, Inc. v. Contour IP Holding LLC*, No. 2017-1894, 2018 WL 3596007, at *4 (Fed. Cir. July 27, 2018) (presentation at a non-public trade show was publicly accessible under the reasonable diligence standard); §VI.D.

E. Summary of the '400 Patent

The '400 Patent was filed well after the work of TGn had started and after *WWiSE* and *TGn-Sync* submitted their proposals. It relates to methods and apparatus "in which burst signals are received" and communication systems utilizing the same.

AR-1001: 1:8-11. The ’400 Patent acknowledges that prior art OFDM communication schemes existed that supported devices that used MIMO, called a “MIMO System,” and devices that did not use MIMO, called a “Target System,” in the same frequency band. AR-1001: 1:13-18, 1:58-66. Such target systems could also be compatible with 802.11a. AR-1001: 1:16-18, 2:2-6. An alleged problem with such prior art mixed-mode systems is that the target system would have to receive and demodulate entire burst signals (including MIMO data) before determining that the transmitting system was not a target system (but rather a MIMO system), leading to extra power consumption. AR-1001: 2:2-12. The ’400 Patent asserts that the solution was to have target systems identify whether or not a received burst signal is from a MIMO system (or a target system) prior to receiving, demodulating and processing the entire burst signal. AR-1001: 2:16-57, 16:6-34, 19:51-64.

To advance this goal, the scheme utilizes a common preamble in the header format of a burst signal. AR-1001: 1:66-2:2, 9:31-33. The burst signal in a target system comprises a preamble, a control signal, and data. AR-1001: 9:37-38, FIG. 4A. The burst signal from at least the first transmitting antenna in the MIMO system comprises “a preamble of the target system, a control signal of the target system, a control signal of the MIMO system, a preamble of the MIMO system and data of the MIMO system.” AR-1001: 9:39-43, FIGS. 4B, 10. A receiver of the target system,

when receiving a burst, determines if a MIMO control signal is received, and stops processing if a MIMO control signal is received. AR-1001: 9:55-67, 13:66-14:40 (MIMO signal pattern), 14:50-54 (same), 16:6-19, 16:26-30, 16:48-17:10 (difference in signal timing is greater than threshold), 18:54-19:8 (same), 19:20-32 (same), 20:7-37 (MIMO phase of pilot signals), 20:58-21:20. The '400 Patent assumes that the target system is an 802.11a system and the MIMO system "is a wireless LAN in which the 802.11n standard is to be implemented." AR-1001: 9:67-10:4.

Figure 4A, below, shows a burst format signal for a target system that has the same frame format as the 802.11a PPDU, so the Target STS, or Short Training Sequence, and Target LTS, or Long Training Sequence, all correspond to the short and long training symbols in the PLCP preamble defined by the 802.11a standard. AR-1001: 11:47-51; §VI.A.1; AR-1002 ¶ 117.

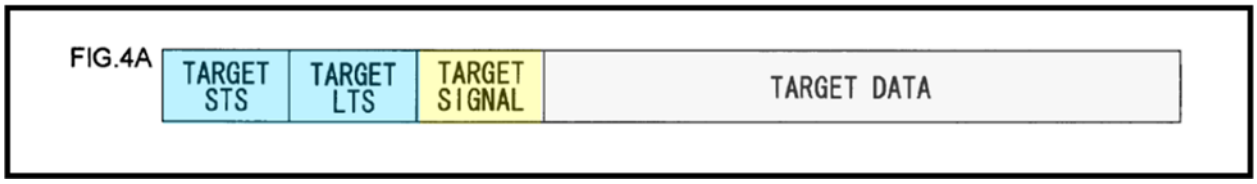

Likewise, Figure 10 (annotated below)[5] shows a burst format for a MIMO system that is transmitted from a system with two antennas. AR-1001: 17:11-13, 17:15-17, FIG. 4B, 12:13-19.

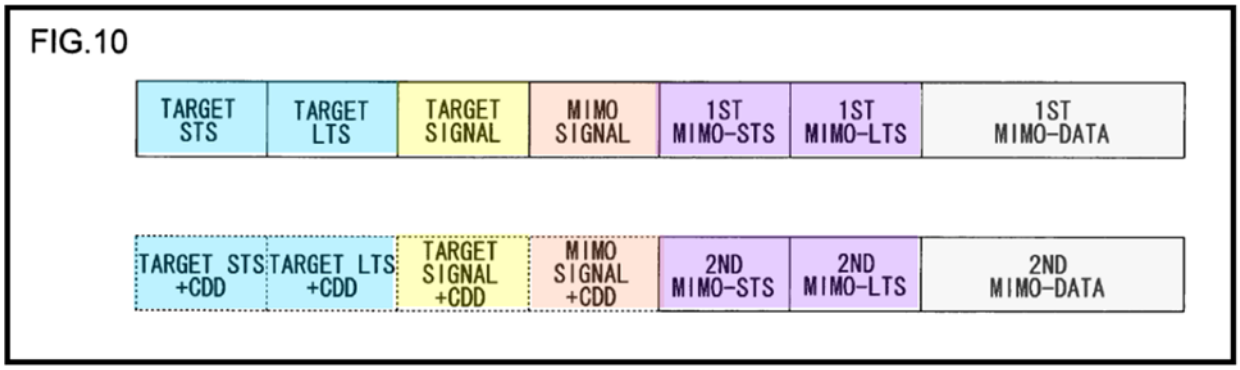

The target training signals in blue and target signal in yellow are the same as the burst signal for a target system in Figure 4A. AR-1001: 17:13-15, FIG. 4B, 12:16-22. The MIMO Signal in orange is a control signal for a MIMO system, and has a channel format that is compatible with the target system. AR-1001: 17:17-23, 12:23-27. For the first and second transmitting antennas, the first and second MIMO training signals are in purple and followed by MIMO-data, which is data compatible with the MIMO system. AR-1001: 17:20-26, 12:28-35. The short and long training

[5] The frame format of Figure 10 is similar to that of Figure 4B, as the burst signal of the first antenna (top row) and the second MIMO-STS, MIMO-LTS, and MIMO-Data of the burst signal of the second antenna (bottom row) are all the same as that in Figure 4B. AR-1001: 17:20-26.

signals are predetermined signal patterns. AR-1001: 12:37-39, 17:20-26. The two burst signals correspond to two spatially divided MIMO channels in which the second signal is cyclically shifted, as reflected by the "+CDD" notation above. AR-1001: 12:36-37, 17:15-17, 17:38-47; AR-1002 ¶¶ 121-122.

Similar to *WWiSE* and *TGn-Sync*, the '400 Patent also discloses using known pilot signals assigned to predetermined subcarriers so that the same pilot signal carrying subcarriers are used in target and MIMO systems. AR-1001: 20:14-19, 20:21-27. Target and MIMO pilot signals use the same OFDM subcarriers for pilot signals as 802.11a: -21, -7, 7, and 21. AR-1001: 20:49-57. Pilot signals in both target and MIMO systems also have the same modulation scheme, such as BPSK. AR-1001: 20:58-62.

However, a target pilot signal and a MIMO pilot signal have different patterns to enable a receiver to identify whether a signal is a target or a MIMO signal. AR-1001: 20:20-37. The '400 Patent discloses that the target signal uses the same pilot pattern as 802.11a, but for the MIMO signal, the pilots are inverted. AR-1001: 21:4-14; AR-1002 ¶ 124. A POSITA would understand that both of the pilot equations would be multiplied by a known sequence so that pilot signals could be tracked. AR-1002 ¶ 63.

F. Prosecution History of the ’400 Patent

The ’400 Patent was filed as Patent Application No. 11/222,221 (the “’221 Application”) on September 9, 2005. AR-1003: pp.2-93. The ’400 Patent claims priority to two Japanese Patent Applications, 2004-263915 and 2004-293029, which were filed on September 10 and October 5, 2004. AR-1001: [30].

During prosecution, the Applicant cancelled, amended, argued and reargued many iterations of its claims to overcome repeated obviousness arguments by the Examiner based on U.S. Patent Publication No. 2005/0276347 (“Mutjaba”) in view of U.S. Patent Publication No. 2005/0174927 (“Stephens”). AR-1003: pp.294-299.

Near the end of this process, the Applicant canceled then-pending claims 1-19, maintained claim 20, and added claim 21, which was a method claim version of previously presented claim 20. AR-1003: pp. 431-437. The Applicant argued that Mutjaba and Stephens failed to disclose that the pattern of the pilot signal is different between the first and second burst formats. AR-1003: pp. 431-437. The Examiner maintained the rejections, stating Stephens taught that pilots modulated using different modulation schemes would generate different pilot patterns. AR-1003: pp. 442-449. In response, the Applicant amended the claims to require that the modulation scheme of the first and second pilot signals are the same. AR-1003: pp. 487-494. The Examiner ultimately allowed claims 20 and 21 (now claims 1 and 2) based on this amendment distinguishing that the modulation scheme of the first and

second pilot signal is the same, and the pattern of the first and second pilot signal is different. AR-1003: pp. 497-503.

G. Level of Ordinary Skill in the Art

As of September 2004, the education level and work experience of a POSITA relevant to the ’400 Patent was a Master of Science in Electrical Engineering, or an equivalent field, as well as two to three years of experience in the field of wireless communications, and familiarity with the IEEE SA 802.11 Wireless LAN standards. AR-1002 ¶ 43. In this Petition, reference to a POSITA refers to a person with these qualifications.

H. Claim Construction

A claim in an unexpired patent subject to *inter partes* review is given its “broadest reasonable construction in view of the specification of the patent in which it appears.” 37 C.F.R. §42.100(b); *Cuozzo Speed Techs., LLC v. Lee*, 136 S. Ct. 2131, 2142 (2016). “[C]laim language should be read in light of the specification as it would be interpreted by one of ordinary skill in the art.” *In re Am. Acad. of Sci. Tech Ctr.,* 367 F.3d 1359, 1364 (Fed. Cir. 2004) (internal citations omitted).

Petitioners submit that, for purposes of this proceeding and its applicable claim construction standard, the terms in the ’400 Patent should have their ordinary and customary meaning read in view of the ’400 Patent’s specification and prosecution history, as would have been understood by a POSITA. Petitioners do

not waive any argument in any other proceeding that claim terms in the ’400 Patent are indefinite or otherwise invalid, nor their right to raise additional issues of claim construction that might be relevant to litigation but irrelevant to this proceeding.

VII. IDENTIFICATION OF HOW THE CLAIMS ARE UNPATENTABLE

A. Challenged Claims

This Petition challenges claims 1-2 of the ’400 Patent.

B. Statutory Grounds for Challenges

Grounds	Claims	Basis
Ground 1	1-2	35 U.S.C. §103(a) (pre-AIA) over *WWiSE* in view of *802.11a* and the knowledge, skill, and creativity (collectively, “Knowledge”) of a POSITA
Ground 2	1-2	35 U.S.C. § 103(a) (pre-AIA) over *TGn-Sync* in view of *802.11a* and the Knowledge of a POSITA
Ground 3	1-2	35 U.S.C. §103(a) (pre-AIA) over *Narasimhan* in view of *Van Zelst* and the Knowledge of a POSITA

Ground 1: *WWiSE* was published on August 13, 2004, and is prior art to the ’400 Patent under at least pre-AIA 35 U.S.C. §102(a)-(b). AR-1004: p.1. *WWiSE* was not considered during prosecution of the ’400 Patent.

IEEE Computer Society, “Supplement to IEEE Standard on Information Technology-Telecommunications and Information Exchange Between Systems-Local and Metropolitan Area Networks-Specific Requirements-Part 11: Wireless LAN Medium Access Control (MAC) and Physical Layer (PHY) Specifications:

High-speed Physical Layer in the 5 GHz Band," IEEE Std802.11a – 1999 (Supplement to IEEE Std 802.11-1999) (AR-1005, "802.11a") was published in 1999 (Copyright Date: 1999, ISBN #: 978-0-7381-1810-9), and is prior art to the '400 Patent under 35 U.S.C. §102(a)-(b).

Ground 2: *TGn-Sync* was published on August 14, 2004, and is prior art to the '400 Patent under at least pre-AIA 35 U.S.C. §102(b). AR-1008: p.1. *TGn-Sync* was submitted during prosecution of the '400 Patent, but was not relied upon by the Examiner during prosecution. 802.11a was published in 1999, and is prior art to the '400 Patent under 35 U.S.C. §102(a)-(b).

Ground 3: U.S. Patent No. 7,995,455 (AR-1006, "Narasimhan") was filed on July 20, 2004, issued on August 9, 2011, and is prior art to the '400 Patent under at least pre-AIA 35 U.S.C. §102(e). AR-1006: [22],[45]. *Narasimhan* was not considered during prosecution of the '400 Patent.

U.S. Patent No. 7,372,913 (AR-1007, "Van Zelst") was filed on July 21, 2005, claims priority to U.S. Patent Application No. 60/590,615 which was filed on July 22, 2004, and is prior art to the '400 Patent under at least pre-AIA 35 U.S.C. §102(e). AR-1007: [22],[45],[60]. *Van Zelst* was not considered during prosecution of the '400 Patent.

VIII. GROUND 1: CLAIMS 1-2 ARE OBVIOUS OVER *WWISE* IN VIEW OF 802.11a

A. Motivation to Combine WWISE and 802.11a

A POSITA would combine the teachings of *WWiSE* and *802.11a* because *WWiSE* was a response to a call for proposals to make improvements to *802.11a* and was meant to be backward compatible with 802.11a. AR-1002 ¶ 237. *WWiSE* discloses that it shall implement all "mandatory and optional data rates defined in Clause 17," which was the 802.11a PHY, and cites multiple sections of 802.11a. AR-1004: p.28, 41-47. A POSITA would understand that this means that *WWiSE* supported all the functionality in 802.11a and was backward compatible with 802.11a, and so would look to 802.11a to supplement its teachings. AR-1002 ¶ 238. Because the teachings of these references were written to be combined, evidence of the reasonableness of the combination, predictably of the solution and probability of success is firmly and undisputedly established. *Id.*

B. Claim 1

[1preamble] A transmitting apparatus for transmitting an OFDM signal, comprising:

To the extent the preamble is limiting, *WWiSE* discloses or renders it obvious. *WWiSE* discloses an apparatus that includes a PHY for an OFDM system that provided a wireless LAN with communication capabilities including transmitting data. AR-1004: p.28; AR-1005: p.3; AR-1002: ¶ 239.

[1a] a generator operative to generate a burst signal having a first burst format where a first Non-MIMO training signal, a first Non-MIMO signal, a MIMO signal, a MIMO training signal, and first data are arranged in the stated order; and

WWiSE discloses this element or renders it obvious.

The ’400 Patent does not use the term “generator” or “generate” anywhere in the specification, but does disclose a data separation unit 20 and a modulation unit 22 which includes an error correcting unit, interleaving unit, preamble adding unit, IFFT unit, GI Unit, and Quadrature Modulation unit. AR-1001: 12:44-13:28. A POSITA would understand that some or all of these elements may be used to generate a burst signal. AR-1002 ¶ 242.

WWiSE likewise disclosed a PPDU encoding process for creating burst signals that was a modified version of the 802.11a PPDU encoding process and corresponds to the ’400 Patent disclosure. AR-1004: p.33; AR-1002 ¶¶ 243. This process created message preambles and message headers, demultiplexed data into separate spatial streams, encoded the data, modulated the data and inserted pilot signals, converted the signals to time domain via an inverse Fourier transform process, and added cyclic shifts and guard intervals. AR-1004: pp. 33, 36, 42-44, 47; AR-1002 ¶¶ 164-184. This process is partially illustrated in Figure 024. AR-1004: 50; AR-1002 ¶ 243. A POSITA would understand that these steps, and the corresponding structures disclosed, in the *WWiSE* PPDU encoding process were used to create a PPDU, or a burst signal, and are the generator required by the claims. AR-1002 ¶ 244.

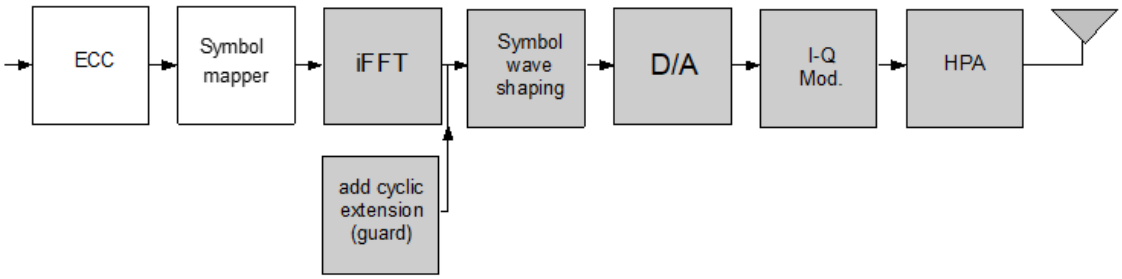

Figure 024 – Transmitter block diagram for the MIMO-OFDM PHY

WWiSE discloses a frame format created by the PPDU encoding process in three or four transmitter mixed mode, as shown in Figure 4, annotated and color coded below. AR-1004: p.32; AR-1002: ¶ 243.

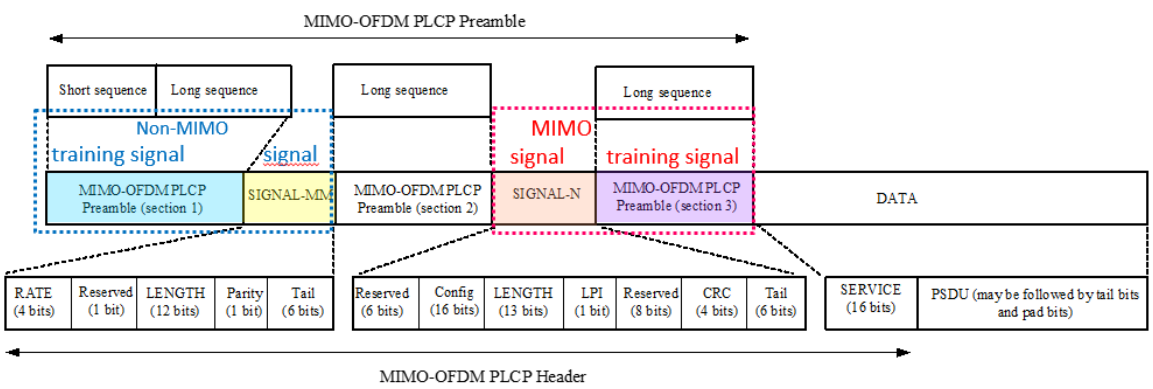

Figure 004– PPDU frame format: Mixed mode access in the 3TX and 4TX modes (20 MHz)

This frame includes a MIMO-OFDM PLCP Preamble that included a non-MIMO training signal (i.e., short sequence SS followed by a long sequence LS), followed by a non-MIMO signal (SIGNAL-MM field), followed by a MIMO signal that includes a SIGNAL-N field, followed by a MIMO training signal (MIMO-

OFDM PLCP Preamble with an LS), followed by DATA. AR-1004: pp.37,40-41; AR-1002: ¶ 246.

These frame components satisfy the frame format required by the claim. AR-1002 ¶ 255. The first MIMO-OFDM PLCP Preamble, in blue, included a short sequence SS and long sequence LS. The short sequence SS is the same as the short sequence in 802.11a. AR-1004: p.37; AR-1002 ¶ 247. The long sequence LS is the same as in 802.11a, but with the addition of two subcarriers at each end, resulting in 56 OFDM subcarriers instead of 52 in 802.11a. AR-1004: p.37; AR-1002 ¶ 248. An 802.11a receiver receiving the LS would ignore the two extra OFDM subcarriers on each end. AR-1002 ¶ 248. The SS and LS together constituted a first Non-MIMO training signal as required by the claim, and could be decoded by an 802.11a receiver. AR-1002 ¶ 249.

The SIGNAL-MM field that followed, in yellow, was the same as the field defined in 802.11a, and included RATE and LENGTH information so that an 802.11a receiver receiving a MIMO-OFDM transmission would know the duration for which the medium would be used. AR-1004: p.41; AR-1002 ¶ 250. The SIGNAL-MM field is the first Non-MIMO signal required by the claim, and could be decoded by an 802.11a receiver. AR-1002 ¶ 250.

The SIGNAL-N field, in beige, was a single MIMO-OFDM symbol that provided length and configuration parameters associated with a MIMO-OFDM

system, including MIMO-specific information such as the number of spatial streams and the number of transmit antennas. AR-1004: pp. 40-41; AR-1002 ¶ 251. The SIGNAL-N field is a MIMO signal as required by the claim. AR-1002 ¶ 251.

Additional long sequences, in purple, followed the SIGNAL-N field, and these allowed the receiver to estimate the channel for each transmit antenna and thus the characteristics for each MIMO channel. AR-1004: p.37; AR-1002 ¶ 252. These additional long sequences are a MIMO training signal as required by the claim. AR-1002 ¶ 252. This MIMO training signal was followed by DATA, which is a first data as required by the claim. AR-1004: p.41.

To the extent that Patent Owner asserts that the claim language "a transmitter apparatus . . . comprising . . . a burst signal having a first burst format where . . . are arranged in the stated order" requires, for example, that "a MIMO signal" *immediately* follow "a first non-MIMO signal" without any additional and/or intervening signals/fields, rather than simply being arranged in that order, such a closed interpretation is unsupported by the claim language, the intrinsic record, or the applicable claim construction standard. The claim's use of "comprising" and "having" indicates that this claim element is open-ended and there is no basis on which it can be interpreted as closed. *ArcelorMittal France v. AK Steel Corp.*, 700 F.3d 1314, 1319-1321 (Fed. Cir. 2012); *Lampi Corp. v. Am. Power Prods.*, 228 F.3d 1365, 1375-1376 (Fed. Cir. 2000). Moreover, a closed interpretation would exclude

broader embodiments described in the ’400 Patent (*see, e.g.*, AR-1001: 16:6-19, 16:25-30) and is inconsistent with the description in the specification. AR-1001: 12:23-25, FIG. 4B (“‘MIMO signal’ . . . is assigned *posterior* to the ‘target LTS’” with intervening “Target Signal” between the “Target LTS” and “MIMO Signal”), 19:26-31, FIG. 10 (“first MIMO data and second MIMO data . . . are assigned in positions *posterior* to the target STS and target LTS” with several intervening signals.). AR-1002 ¶¶ 253-254.

[1b] a transmitter operative to transmit the burst signal generated by the generator, wherein

WWiSE discloses this limitation or renders it obvious. *WWiSE* discloses a transmitter block diagram in Figure 024, which includes digital to analog conversion, modulation, amplification, and transmission. AR-1004: p. 50; AR-1002: ¶ 256. Figure 024 includes the steps of converting a PPDU generated by the PPDU encoding process in claim [1a] from a baseband signal to an RF signal and then transmitting. AR-1004: pp. 33, 36, 50-51. AR-1002: ¶ 257.

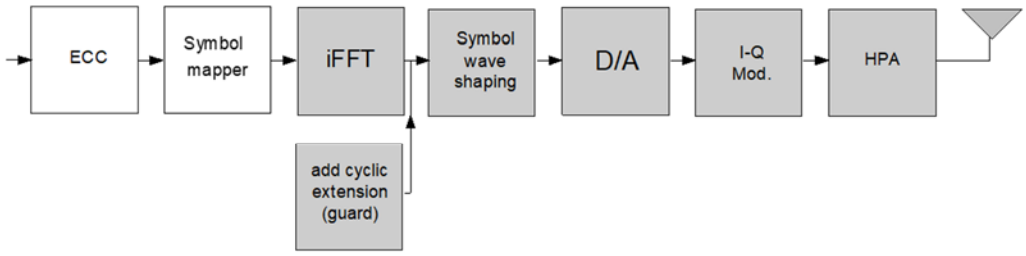

Figure 024 – Transmitter block diagram for the MIMO-OFDM PHY

[1c] a subcarrier carrying a first pilot signal included by frequency-division multiplexing in the first data in the first burst format of the burst signal generated by the generator is the same as a subcarrier carrying a second pilot signal included by frequency-division multiplexing in second data in a second format where a second Non-MIMO training signal, a second Non-MIMO signal, and the second data are arranged in the stated order,

WWiSE and *802.11a* render this limitation obvious.

802.11a discloses a legacy frame format with a PLCP Preamble, a SIGNAL, and DATA, *i.e.*, the claimed non-MIMO target format, shown in Figure 107 annotated below.

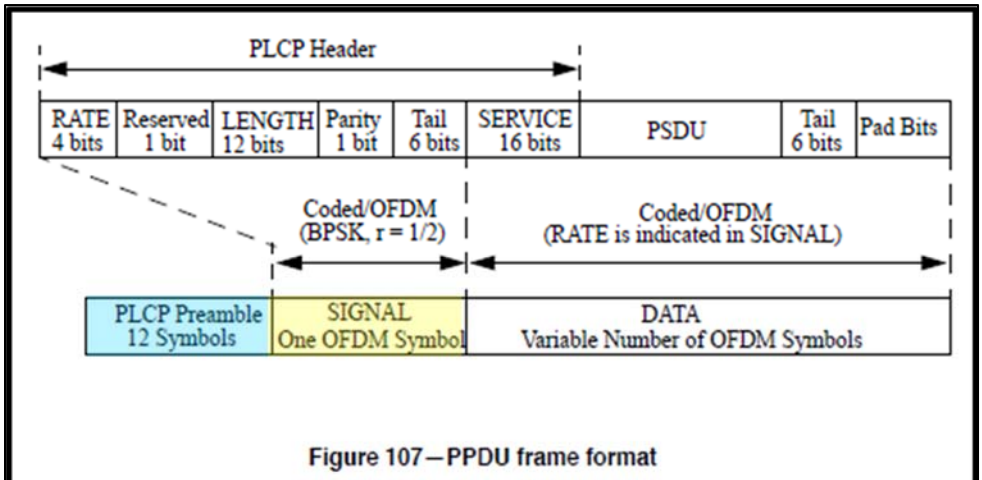

Figure 107—PPDU frame format

The PLCP Preamble included short training sequences followed by long training sequences, and is a second Non-MIMO training signal. AR-1005: p.7; AR-1002: ¶ 260. The SIGNAL field is a second Non-MIMO signal and is followed by the claimed DATA field, which is a second data. AR-1005: p.8; AR-1002: ¶ 260. The 802.11a frame format is the second burst format required by the claim. AR-1002: ¶ 261.

In 802.11a, four of the subcarriers in each OFDM symbol, -21, -7, 7, and 21, were dedicated to pilot signals. AR-1005: p.22. These pilot signals were inserted in an OFDM modulation process that mapped DATA onto data subcarriers and inserted pilot signals onto the pilot subcarriers, and were first inserted into the SIGNAL field and also transmitted on all data symbols of an 802.11a PPDU. AR-1002: ¶ 263.

WWiSE also discloses inserting pilot signals into specific subcarriers of every signal on each transmit antenna. AR-1004: p. 33. These subcarriers were -21 and +21 in 20MHz mode. AR-1004: p.47. The pilot signals were first transmitted on the SIG-N symbol and were thus also transmitted in all data symbols of a *WWiSE* PPDU. AR-1004: p.47; AR-1002: ¶ 264.

In both *WWiSE* and *802.11a*, the OFDM subcarriers -21 and 21 were used for pilot signals. AR-1002: ¶ 265.

[1d] a modulation scheme of the first pilot signal is the same as a modulation scheme of the second pilot signal,

WWiSE and *802.11a* render this limitation obvious. *802.11a* discloses that the pilots were modulated using Binary Phase Shift Keying (BPSK). AR-1005: p.22; AR-1002 ¶ 266. While *WWiSE* does not explicitly disclose the modulation scheme it used for pilot signals, *WWiSE* discloses that "subcarrier modulation mapping shall follow IEEE 802.11a-1999 clause 17.3.5.7 for each transmit antenna." AR-1004: p.47. Further, *WWiSE* discloses using equation (25) of 802.11a to control the

polarity of pilot subcarriers. AR-1004: p.47; AR-1005: p.23. Thus, a POSITA would understand that *WWiSE* teaches using the same BPSK modulation scheme for the pilot signals taught by 802.11a. AR-1002 ¶ 267.

[1e] a pattern of the first pilot signal is different from a pattern of the second pilot signal, and

WWiSE and *802.11a* render this limitation obvious. *802.11a* teaches using four fixed pilot subcarriers that transmit the below sequence:

$$p_{0..126} = \{1,1,1,1,\ -1,-1,-1,1,\ -1,-1,-1,-1,\ 1,1,-1,1,\ -1,-1,1,1,\ -1,1,1,-1,\ 1,1,1,1,\ 1,1,-1,1,\ 1,1,-1,1,\ 1,-1,-1,1,\ 1,1,-1,1,\ -1,-1,-1,1,\ -1,1,-1,-1,\ 1,-1,-1,1,\ 1,1,1,1,\ -1,-1,1,1,\ -1,-1,1,-1,\ 1,-1,1,1,\ -1,-1,-1,1,\ 1,-1,1,-1,\ -1,1,-1,-1,\ 1,-1,1,1,\ 1,1,-1,1,\ -1,1,-1,1,\ -1,-1,-1,-1,\ -1,1,-1,1,\ 1,-1,1,-1,\ 1,1,1,-1,\ -1,1,-1,-1,\ -1,1,1,1,\ -1,-1,-1,-1,\ -1,-1,-1\} \quad (25)$$

AR-1005: pp.22-23; AR-1002 ¶ 269. The first element of this sequence was used in the SIGNAL symbol, while subsequent elements were used for DATA symbols. AR-1005: p.23; AR-1002 ¶ 270. Thus, in 802.11a the sequence of the pilot signals for the first 8 OFDM symbols was as illustrated below, and this was the pattern of the second pilot signal:

OFDM Symbol								
	SIGNAL	Data						
Subcarrier	0	1	2	3	4	5	6	7
-21	1	1	1	1	-1	-1	-1	1
-7	1	1	1	1	-1	-1	-1	1
7	1	1	1	1	-1	-1	-1	1
21	-1	-1	-1	-1	1	1	1	-1

AR-1002 ¶ 271. *WWiSE* used the same sequence as defined in equation (25) of 802.11a (above) but altered the sequence based on which antenna was used. AR-

1004: p.47; AR-1002 ¶¶ 272-275. The resulting *WWiSE* pilot signals, the pattern of the first pilot signal, in three antenna mode were different from the pilot signals transmitted in 802.11a, as shown in the following tables, thereby meeting this limitation:

Antenna 1								
OFDM Symbol								
	SIG-N	Data						
Subcarrier	0	1	2	3	4	5	6	7
-21	1	1	-1	-1	-1	-1	1	-1
21	1	-1	-1	1	-1	1	1	1

Antenna 2

OFDM Symbol								
	SIG-N	Data						
Subcarrier	0	1	2	3	4	5	6	7
-21	1	-1	1	-1	-1	1	-1	-1
21	-1	1	-1	1	1	-1	1	1

Antenna 3

OFDM Symbol								
	SIG-N	Data						
Subcarrier	0	1	2	3	4	5	6	7
-21	-1	1	1	-1	1	-1	-1	-1
21	1	1	-1	-1	-1	-1	1	-1

AR-1002 ¶ 276.

[1f] the transmitter transmits the burst signal from a plurality of antennas such that the signal transmitted from a given one antenna is shifted in timing

with respect to the signal transmitted from another antenna in a cyclical manner.

WWiSE discloses this limitation or renders it obvious. Figure 10 (annotated below) disclosed a training structure for a three or four antenna MIMO-OFDM system. AR-1004: pp.37,39; AR-1002 ¶ 279.

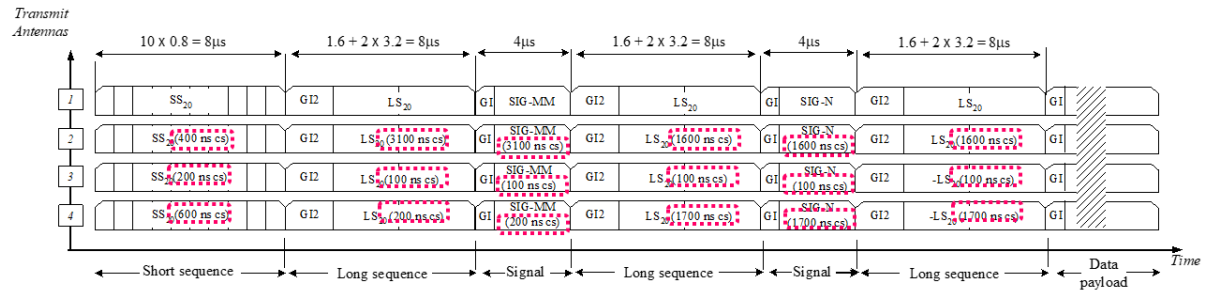

Figure 010 – MIMO-OFDM Training structure for N_{TX} = 3, 4, 20 MHz, mixed mode operation

WWiSE disclosed transmitting a burst signal from multiple antennas, where the MIMO-OFDM PLCP Preamble section 1, the SIGNAL-MM, SIGNAL-N, and MIMO-OFDM PLCP Preamble section 3 signals transmitted from a second antenna were a "cyclically shifted version of the sequence transmitted from the first antenna." AR-1004: pp.37,39. Cyclic shifts of this type were known as an example of cyclic delay diversity. AR-1002 ¶¶ 280-283. Thus, *WWiSE* disclosed this limitation, regardless of which claimed signal is the subject of this limitation.

C. Claim 2

[2preamble] A transmitting method for transmitting an OFDM signal, comprising:

WWiSE discloses this limitation for the reasons discussed in claim [1preamble].

[2a] generating a burst signal having a first burst format where a first Non-MIMO training signal, a first Non-MIMO signal, a MIMO signal, a MIMO training signal, and first data are arranged in the stated order; and

WWiSE discloses this limitation for the reasons discussed in claim [1a].

[2b] transmitting the burst signal, wherein

WWiSE discloses this limitation for the reasons discussed in claim [1b].

[2c] a subcarrier carrying a first pilot signal included by frequency-division multiplexing in the first data in the first burst format is the same as a subcarrier carrying a second pilot signal included by frequency-division multiplexing in second data in a second format where a second Non-MIMO training signal, a second Non-MIMO signal, and the second data are arranged in the stated order,

WWiSE discloses this limitation for the reasons discussed in claim [1c].

[2d] a modulation scheme of the first pilot signal is the same as a modulation scheme of the second pilot signal,

WWiSE discloses this limitation for the reasons discussed in claim [1d].

[2e] a pattern of the first pilot signal is different from a pattern of the second pilot signal, and

WWiSE and *802.11a* render this limitation obvious for the reasons discussed in claim [1e].

[2f] the transmitting transmits the burst signal from a plurality of antennas such that the signal transmitted from a given one antenna is shifted in timing

with respect to the signal transmitted from another antenna in a cyclical manner.

WWiSE discloses this limitation for the reasons discussed in claim [1f].

IX. GROUND 2: CLAIMS 1-2 ARE OBVIOUS IN VIEW OF *TGN-SYNC* IN VIEW OF 802.11a

A. Motivation to Combine *TGn-Sync* and 802.11a

A POSITA would be motivated to combine *TGn-Sync* and 802.11a because *TGn-Sync* is a response to a call for proposals to make improvements to 802.11a and was meant to be backward compatible with 802.11a. AR-1002 ¶ 369. *TGn-Sync* discloses that it "offers seamless interoperability with 802.11 legacy devices" by an enhanced 802.11 preamble design. AR-1008: p.3.

TGn-Sync cites multiple sections of 802.11a, including the definitions of legacy training signals and the legacy signal, and the behavior for modulation. AR-1008: pp.102-104, 110. A POSITA would necessarily need to consider the teachings of 802.11a when considering *TGn-Sync*. AR-1002 ¶ 370. Because the references were written to be combined, evidence of the reasonableness of the combination, predictably of the solution and probability of success is firmly and undisputedly established. *Id.*

B. Claim 1

[1preamble] A transmitting apparatus for transmitting an OFDM signal, comprising:

To the extent the preamble is limiting, *TGn-Sync* discloses or renders it obvious. *TGn-Sync* discloses an apparatus that uses an OFDM-PHY that provided a wireless LAN with communication capabilities including data. AR-1008: p.3; AR-1005: p.3; AR-1002: ¶ 371.

[1a] a generator operative to generate a burst signal having a first burst format where a first Non-MIMO training signal, a first Non-MIMO signal, a MIMO signal, a MIMO training signal, and first data are arranged in the stated order; and

TGn-Sync discloses this limitation or renders it obvious. The '400 Patent does not use the term "generator" or "generate" anywhere in the specification, but does disclose a data separation unit 20 and a modulation unit 22 which includes an error correcting unit, interleaving unit, preamble adding unit, IFFT unit, GI Unit, and Quadrature Modulation unit. AR-1001: 12:44-13:28. A POSITA would understand that some or all of these elements may be used to generate a burst signal. AR-1002 ¶¶ 373-374.

TGn-Sync disclosed a "transmitter datapath" for creating burst signals that was a modified version of the 802.11a PPDU encoding process, illustrated in Figure 35 below, and corresponded to what is disclosed in the '400 Patent. AR-1008: p.92; AR-1002 ¶ 375. This process first scrambled, encoded, and punctured data bits in the same way as 802.11a, and then demultiplexed data into multiple spatial streams.

AR-1008: pp. 117-118; AR-1002: ¶ 376. Each spatial stream was then separately interleaved, modulated, had pilot signals inverted, and converted to time domain using a Fourier transform. AR-1008: pp. 113, 117-123. Cyclic guard intervals were then inserted, and the resulting signals were forwarded to RF stages for transmission. AR-1008: pp.117, 123-124; AR-1002 ¶ 376.

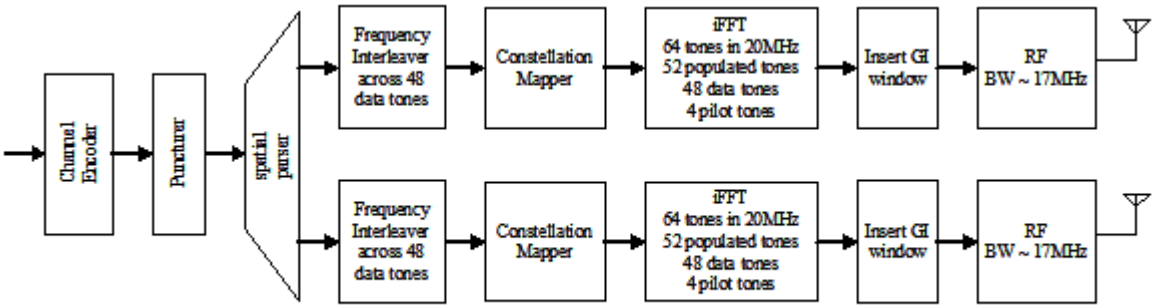

Figure 35: Transmitter Datapath for 2-antenna MIMO in 20MHz

The PPDU generated in *TGn-Sync* included an enhanced preamble that facilitated interoperability with legacy devices. AR-1008: p.3. This preamble, illustrated in annotated Figure 30, contained a PLCP Preamble, a legacy SIGNAL field, an HT Signal field, training signals, and then Data. AR-1008: p.79; AR-1002 ¶ 377.

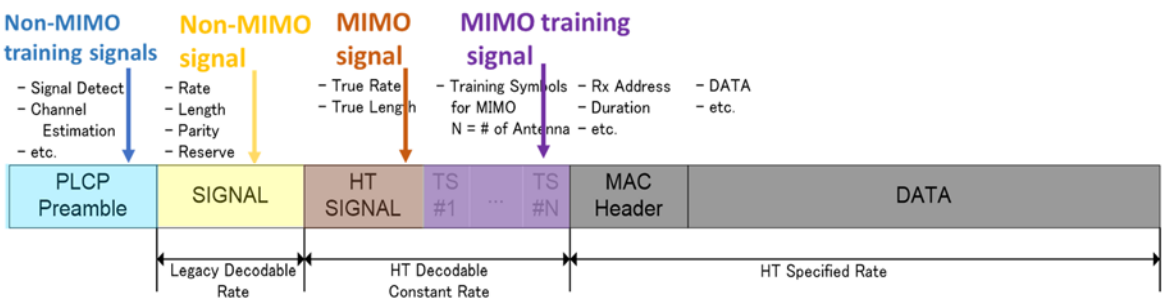

Figure 30 – PPDU Format with Legacy Protection

This is further illustrated in annotated Figure 46:

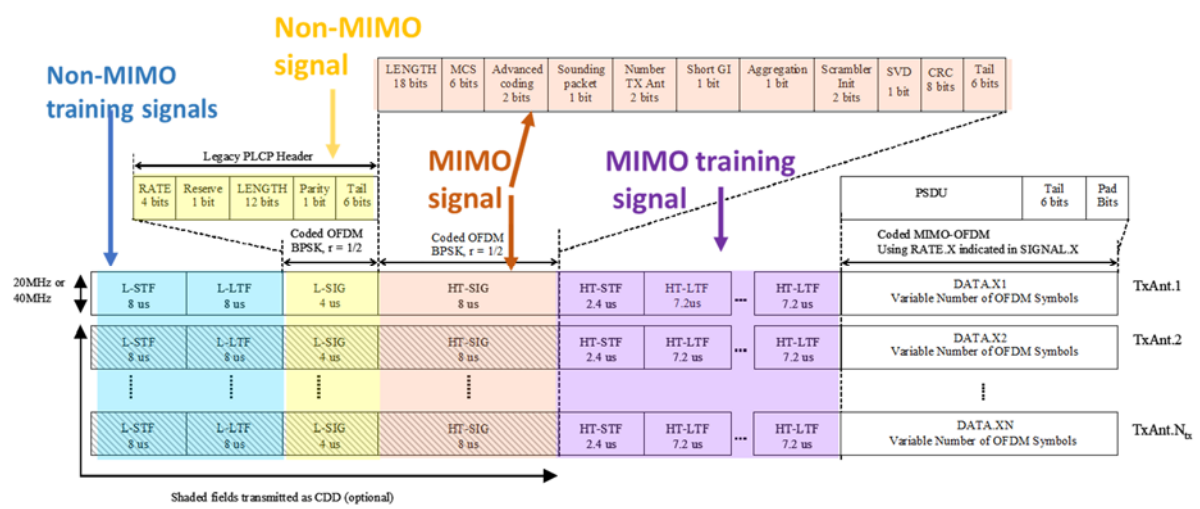

Figure 46: PPDU format leveraging CDD transmission

The PPDU began with Legacy Short and Long Training Fields ("L-STF" and "L-LTF"), which were identical to the short and long training fields in 802.11a. AR-1008: pp.100-104. A POSITA would understand that because these fields, highlighted in blue, were used for training in both 802.11a and high throughput ("HT") systems, the L-STF and L-LTF together constituted a first non-MIMO training signal. AR-1002: ¶ 380.

A legacy SIGNAL field ("L-SIG") field followed the training signal, was defined, modulated and encoded according to the procedure in 802.11a. AR-1008: p.101, 110-111. A POSITA would understand that because the L-SIG, highlighted in yellow, was defined in 802.11a and encoded and modulated per the procedure defined in 802.11a, it is a first non-MIMO signal. AR-1002: ¶ 381.

An HT-SIG (*i.e.*, high-throughput SIGNAL) field followed the L-SIG, and was dedicated to high throughput mode. AR-1008: p.101. The HT-SIG contained the modulation scheme, the number of spatial streams, whether MIMO training was per antenna, and the number of HT Long Training Fields ("HT-LTFs") that followed. AR-1008: pp.112-115. A POSITA would understand that the HT-SIG, highlighted in brown in Figure 30 and in beige in Figure 46, is a MIMO signal because it contained MIMO-specific information including the number of spatial streams. AR-1002 ¶ 382.

An HT Short Training Field ("HT-STF") and at least one HT-LTF followed the HT-SIG, where the HT-STF was used to "fine tune the AGC for HT MIMO reception" and the number of HT-LTFs were equal to the number of spatial streams, such that "[i]n basic MIMO mode, the number of spatial streams is equal to the number of transmit antennas." AR-1008: pp.104-105. A POSITA would understand that the HT-STF and the at least one HT-LTF, highlighted in purple, were training signals used for MIMO operation, and are thus a MIMO training signal. AR-1002: ¶ 383.

Data followed the HT training signals, and a POSITA would understand that this is a first data. AR-1008: pp.101-102; AR-1002: ¶ 384.

[1b] a transmitter operative to transmit the burst signal generated by the generator, wherein

TGn-Sync discloses or renders this limitation obvious. Figure 35 of *TGn-Sync* discloses a transmitter datapath that includes certain components for transmitting the burst signal, including a block called "RF BW ~ 17 MHz," which is responsible for the well-known steps of digital-to-analog conversion, baseband-to-RF conversion, amplification, and transmission.

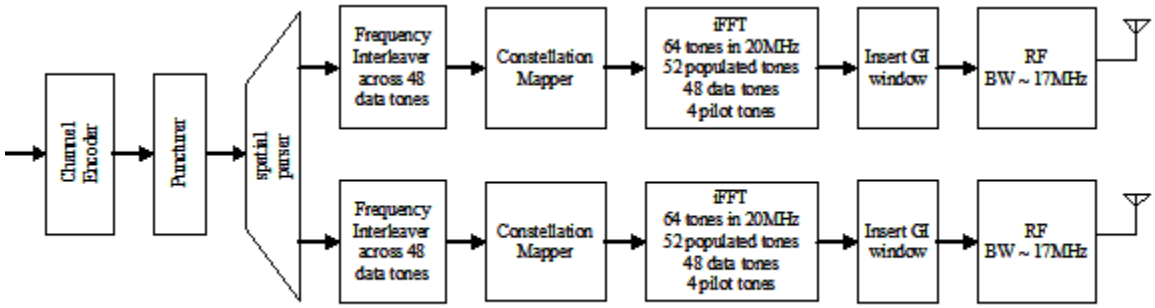

Figure 35: Transmitter Datapath for 2-antenna MIMO in 20MHz

AR-1008: p. 92, 117, 123-124; AR-1002 ¶¶ 386-388.

[1c] a subcarrier carrying a first pilot signal included by frequency-division multiplexing in the first data in the first burst format of the burst signal generated by the generator is the same as a subcarrier carrying a second pilot signal included by frequency-division multiplexing in second data in a second format where a second Non-MIMO training signal, a second Non-MIMO signal, and the second data are arranged in the stated order,

TGn-Sync and *802.11a* render this limitation obvious. As discussed above in §VIII.B and shown in color-coded Figure 107 below, *802.11a* discloses a legacy frame format including a PLCP Preamble, a SIGNAL field, and DATA. AR-1008: p. 8. The PLCP Preamble, in blue, is a second non-MIMO training signal, the

SIGNAL, in yellow, is a second non-MIMO signal, and DATA is a second data. AR-1002: ¶¶ 390-391.

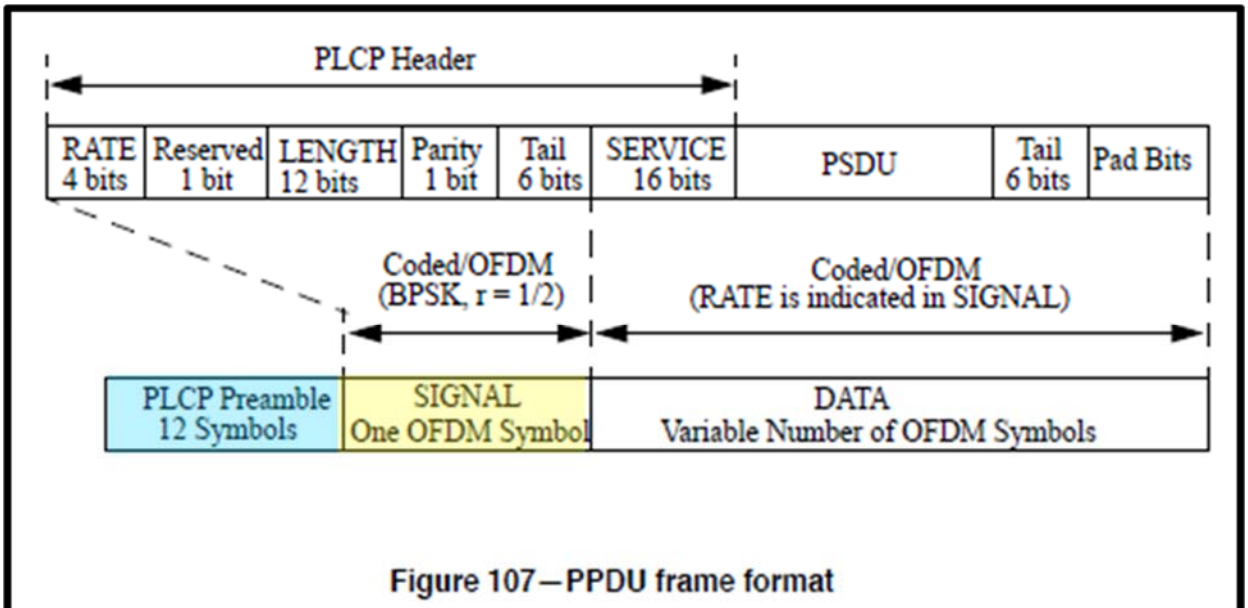

Figure 107—PPDU frame format

802.11a discloses inserting pilot signals onto pilot subcarriers -21, -7, 7, and 21 in the SIGNAL and DATA fields. AR-1008: pp.22-23; AR-1002: ¶¶ 392-393, §VIII.B.

TGn-Sync discloses inserting pilot signals into specific OFDM subcarriers in each OFDM symbol. AR-1008: pp.122-123. In 20MHz mode, these subcarriers were the same as in 802.11a: -21, -7, 7, and 21. AR-1008: pp.122-123. A POSITA would understand that *TGn-Sync* teaches transmitting pilot signals in the DATA field, because pilot signals were used for carrier and phase tracking. AR-1002: ¶ 394.

TGn-Sync discloses that it was interoperable with legacy 802.11 devices, so it was capable of transmitting the 802.11a frame discussed above. AR-1008: p.3; AR-

1002: ¶ 396. Also, *TGn-Sync* explicitly states that pilot signals in legacy mode were defined in *802.11a*. AR-1008: p.122. *TGn-Sync* relies on behavior defined in *802.11a* for generation of pilot signals in HT-mode, and so a POSITA would necessarily combine the *802.11a*'s frame format and disclosure of pilot signals with the teachings of *TGn-Sync*. AR-1002: ¶¶ 396-397.

[1d] a modulation scheme of the first pilot signal is the same as a modulation scheme of the second pilot signal,

TGn-Sync and *802.11a* render this limitation obvious. *802.11a* teaches that pilot signals in *802.11a*, and thus in the second pilot signal, were BPSK-modulated by a pseudo binary sequence set forth in equation (25). AR-1005: pp.22-23; AR-1002: ¶ 399. For HT transmissions, *TGn-Sync* teaches using the same pseudo-binary sequence as 802.11a, so a POSITA would understand that pilot signals in HT transmissions, *i.e.* the first pilot signal, used the same modulation scheme as *802.11a*. AR-1008: p.123; AR-1002: ¶ 400.

[1e] a pattern of the first pilot signal is different from a pattern of the second pilot signal, and

TGn-Sync and *802.11a* render this limitation obvious. The pattern of pilot signals in 802.11a, the second pilot signal, has subcarriers -21, -7, and 7 with the same signal and subcarrier 21 is inverted. AR-1005: p.22; AR-1002: ¶¶ 402-404.

In *TGn-Sync*, pilot signals for HT transmissions, *i.e.*, the first pilot signal, varied by spatial stream and subcarrier. AR-1008: p.123; AR-1002: ¶¶ 405-406.

The patterns of the resulting pilot signal varied by transmit antenna and for antennas 1 and 3 were:

Subcarrier				
Antenna	-21	-7	7	21
1	1	1	1	-1
3	1	-1	1	1

AR-1002: ¶ 407. The pattern of pilot signals on antenna 1, whether transmitting a legacy signal or an HT MIMO signal, was the same as that in *802.11a.* The pattern of antenna 3 when transmitting an HT MIMO signal, however, was different from pilot pattern of *802.11a* because subcarrier 21 was inverted for transmissions in *802.11a*, but subcarrier -7 was the subcarrier that was inverted for transmission from antenna three in *TGn-Sync*. AR-1002: ¶¶ 408-409. Thus, some the patterns of the pilot signal were different for HT Transmissions, the first pilot signal, compared to *802.11a* transmissions, the second pilot signal.

[1f] the transmitter transmits the burst signal from a plurality of antennas such that the signal transmitted from a given one antenna is shifted in timing with respect to the signal transmitted from another antenna in a cyclical manner.

TGn-Sync discloses or renders obvious this limitation. Figure 46 (discussed above in limitation 1[a]) shows a MIMO PPDU with the frame format in Figure 30 transmitted using multiple antennas. AR-1008: pp.101. The frames transmitted from multiple antennas were shifted in time using cyclic delay diversity. AR-1008: p. 101. This was done by applying phase shifts across the transmit antenna so that

the delay was introduced cyclically and thus create frequency selectivity in the receiver. AR-1008: p.101; AR-1002: ¶¶ 410-411. The burst signal was transmitted from multiple antennas so that the L-STF and L-LTF, the L-SIG, and the HT-SIG were shifted in a cyclical manner across the antenna array. AR-1008: p.95; AR-1002: ¶ 412. Thus, *TGn-Sync* disclosed this limitation, regardless of which claimed signal is the subject of this limitation.

C. Claim 2

[2preamble] A transmitting method for transmitting an OFDM signal, comprising:

TGn-Sync discloses this limitation for the reasons discussed in claim [1preamble].

[2a] generating a burst signal having a first burst format where a first Non-MIMO training signal, a first Non-MIMO signal, a MIMO signal, a MIMO training signal, and first data are arranged in the stated order; and

TGn-Sync discloses this limitation for the reasons discussed in claim [1a].

[2b] transmitting the burst signal, wherein

TGn-Sync discloses this limitation for the reasons discussed in claim [1b].

[2c] a subcarrier carrying a first pilot signal included by frequency-division multiplexing in the first data in the first burst format is the same as a subcarrier carrying a second pilot signal included by frequency-division multiplexing in second data in a second format where a second Non-MIMO training signal, a second Non-MIMO signal, and the second data are arranged in the stated order,

TGn-Sync and 802.11a render this limitation obvious for the reasons discussed in claim [1c].

[2d] a modulation scheme of the first pilot signal is the same as a modulation scheme of the second pilot signal,

TGn-Sync and 802.11a render this limitation obvious for the reasons discussed in claim [1d].

[2e] a pattern of the first pilot signal is different from a pattern of the second pilot signal, and

TGn-Sync and 802.11a render this limitation obvious for the reasons discussed in claim [1e].

[2f] the transmitting transmits the burst signal from a plurality of antennas such that the signal transmitted from a given one antenna is shifted in timing with respect to the signal transmitted from another antenna in a cyclical manner.

TGn-Sync discloses this limitation for the reasons discussed in claim [1f].

X. GROUND 3: CLAIMS 1-2 ARE OBVIOUS IN VIEW OF *NARASIMHAN* IN VIEW OF *VAN ZELST*

A. *Narasimhan* Overview

Narasimhan disclosed a MIMO-OFDM system that uses "different types of space frequency code matrices for encoding data on multiple substreams for transmission on multiple antennas" and utilized a "frame format that includes long training OFDM symbols for training additional antennas and for link adaptation and a header with an additional SIGNAL symbol to indicate MIMO-OFDM specific information." AR-1006: 1:44-52. Figure 1 showed communication system 100 with first transceiver 102 having multiple transmit antennas 104 and second transceiver having multiple receive antennas 108, which communicated over wireless medium

H. AR-1006: 2:49-60. The system could be implemented using IEEE 802.11 standards using OFDM and be backward compatible with 802.11a. AR-1006: 2:61-3:6, 7:31-35.

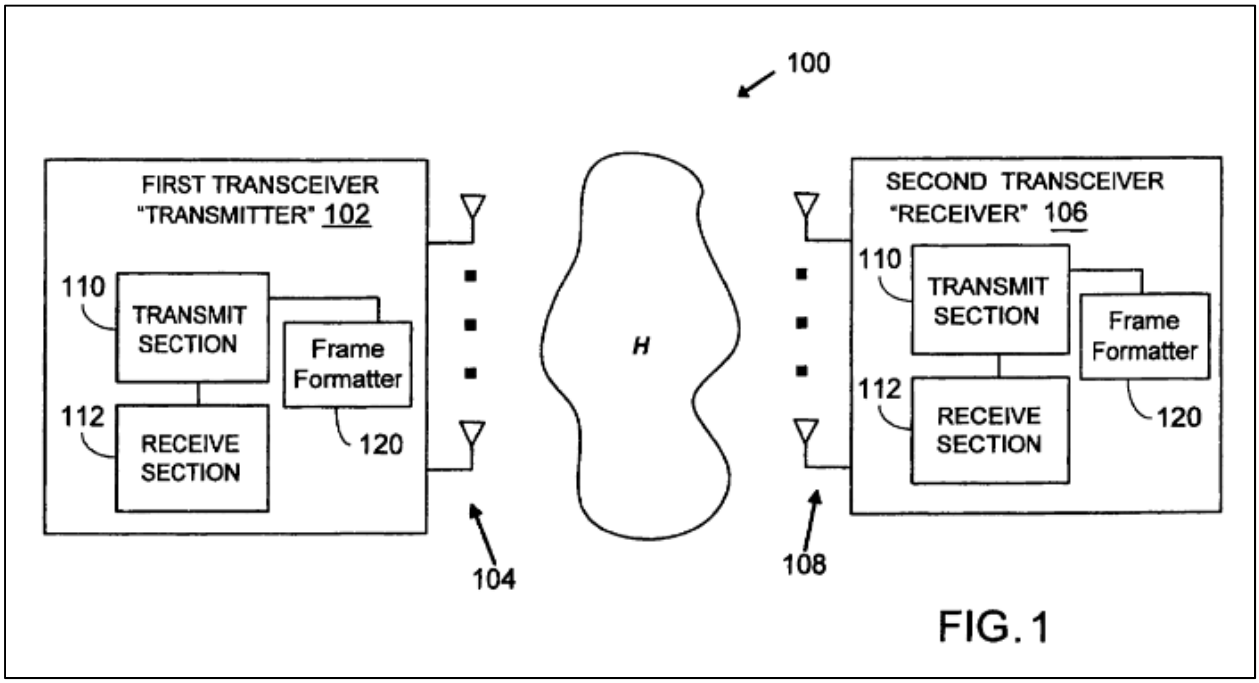

FIG. 1

The transmitter sent known training sequences, preferably at the beginning of a frame, to the receiver to allow the receiver to estimate channel characteristics on each OFDM subcarrier. AR-1006: 3:6-19; AR-1002: ¶ 196. Frame formatter 120 generated and processed different sections of a frame for transmission from different antennas. AR-1006: 6:26-29.

Figure 2 showed a block diagram of transmit section 110, with a modified version of the 802.11a transmitter accounting for multiple transmit antennas. AR-1006: 3:41-61. Data was scrambled by scrambler 200, passed to convolutional encoder 202, and then interleaved into multiple substreams by space-frequency

interleaver 204. AR-1006: 3:46-49. Each substream was modulated by QAM Mapping module 206, and then a space-frequency coder 208 was applied across all streams. AR-1006: 3:50-54. Individual substreams were then processed in a processing chain 210 including a pilot insertion module 212 and other signal and RF processing. AR-1006: 3:56-61; AR-1002: ¶ 189.

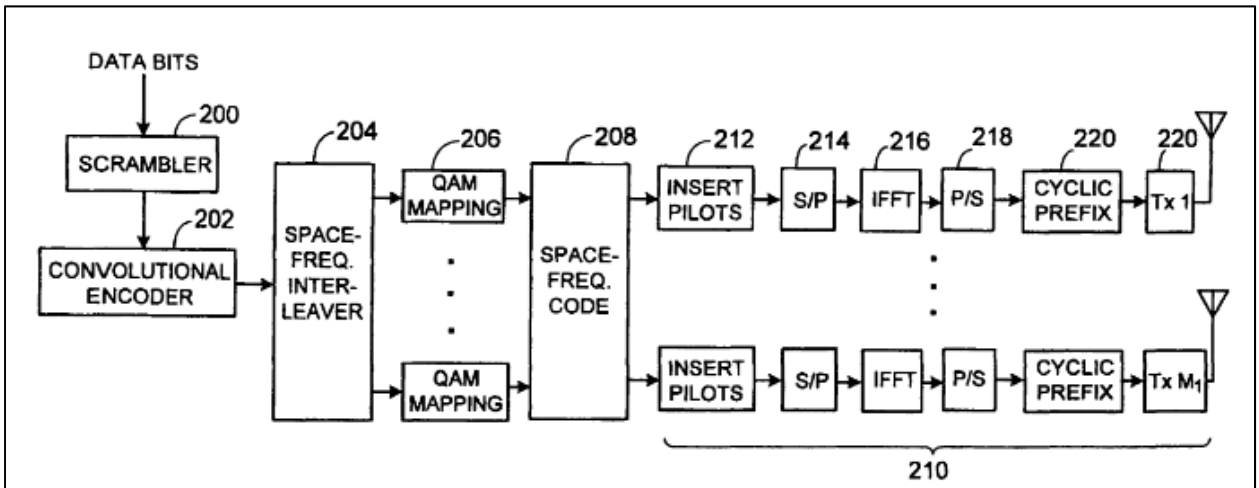

FIG. 2

Space-frequency coder 208 encoded the different substreams. AR-1006: 4:15-16. *Narasimhan* discloses multiple methods of encoding substreams, including using an embodiment implementing cyclic delay diversity in space frequency coder 208. AR-1006: 5:38-40; AR-1002 ¶¶ 190-192.

The system offered compatibility with 802.11a, optionally using use the same number of OFDM subcarriers, frame format, data tones, pilot tones, and symbol duration. AR-1006: 5:55-61, Fig. 5.

Narasimhan also disclosed a MIMO-OFDM frame format in Figure 6, which is annotated and shifted below to be linear. AR-1002: ¶ 321; AR-1006: 6:23-29.

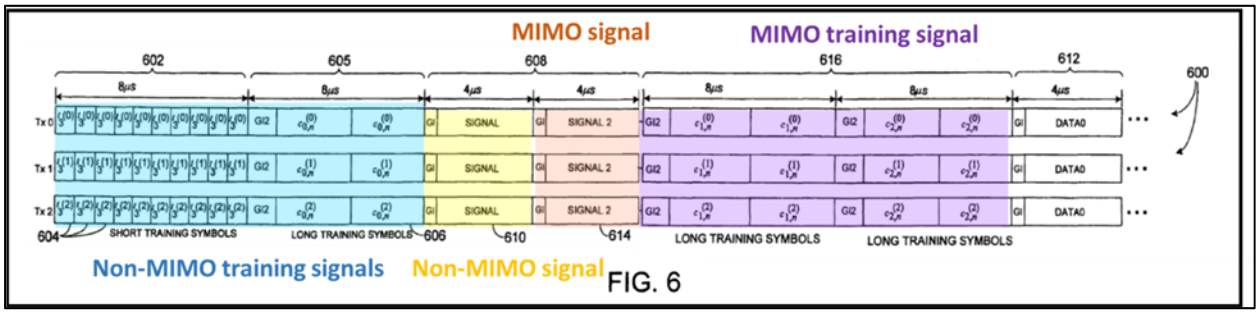

FIG. 6

Like 802.11a, each MIMO-OFDM frame 600 included non-MIMO training signals (short preamble 602 with short training symbols 604, long preamble 605 with long training symbols 606) and a non-MIMO signal (SIGNAL 610). AR-1006: 6:30-35. Short preamble 602 and long preamble 605 are compatible with 802.11a. AR-1006: 7:12-24; AR-1002: ¶ 197. The MIMO-OFDM frame added a MIMO signal (SIGNAL2 614 containing "MIMO-OFDM specific information, such as the number of transmit antennas and the spatial multiplexing rate") and MIMO training signals (supplemental long preambles 616 having "additional long training symbols to train other antennas") and concluded with DATA 612. AR-1006: 6:35-41.

Frame formatter 120 could operate in MIMO-OFDM mode or legacy mode for compatibility with 802.11a systems, as illustrated in the flowchart of Figure 9. AR-1006: 8:25-29.

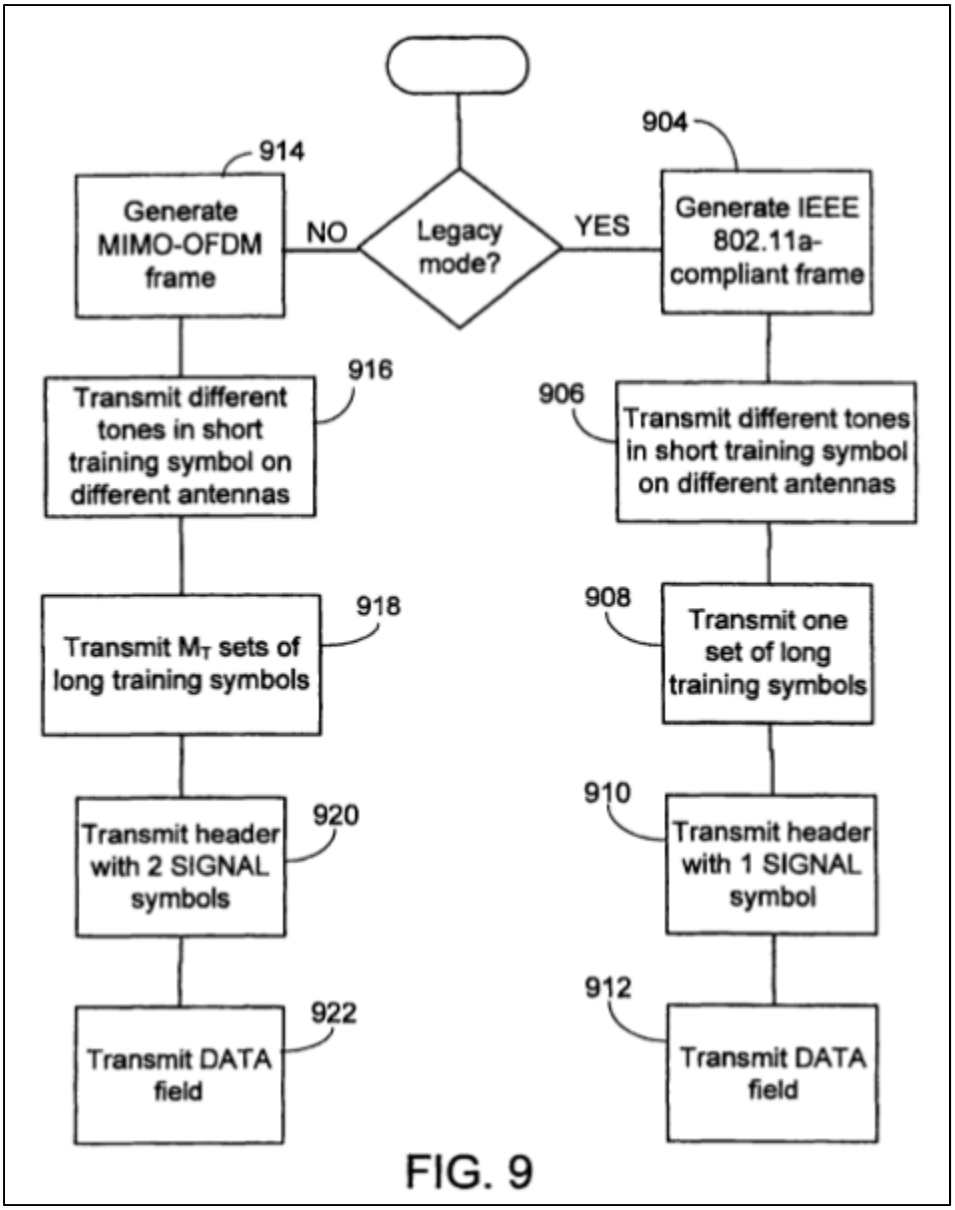

FIG. 9

In legacy mode, the frame formatter generated an 802.11a frame with short training symbols, long training symbols, one SIGNAL field, and DATA. AR-1006: 8:29-31, 8:35-39. In MIMO-OFDM mode, the frame formatter generates a MIMO-OFDM frame with short training symbols followed by one long training signal, followed by a legacy SIGNAL and "a SIGNAL symbol with MIMO-OFDM-specific

information," followed by additional long training symbols, followed by DATA. AR-1006: 8:40-51, 6:30-41.

After the frame was generated, pilot tones were inserted in each data symbol per 802.11a, such that the same OFDM subcarriers, -21, -7, 7, 21, are used and modulated per 802.11a MPSK, which is PSK modulation applied to multiple carriers. AR-1006: 8:1-5. MPSK includes multiple modulation schemes including BPSK, but a POSITA would understand this reference to 802.11a MPSK to mean BPSK because 802.11a used BPSK modulation for its pilot signal sequences. AR-1005: p.22; AR-1002: ¶ 193.

B. *Van Zelst* Overview

Van Zelst stated that OFDM systems like 802.11 used pilot tones to assist with transmission and reception, AR-1007: 1:13-25, and disclosed "a transmitter using a plurality of transmit antennas provid[ing] for pilot tones that are usable to capture transmitter diversity benefits." AR-1007: 1:41-43. The transmitter generated multiple spatial streams each of which included data and pilot signals known by the receiver, allowing the receiver to characterize the communication channel by identifying known pilot signal values. AR-1007: 1:44-61.

Van Zelst disclosed inserting pilot signals on certain subcarriers in the OFDM signal. AR-1002 ¶ 203. Using a distinguishable set of pilot sequences for different spatial streams allowed the receiver to estimate the phase noise, frequency offset,

and/or transmit channels per spatial stream, thus enabling spatial stream diversity. AR-1007: 6:4-18. *Van Zelst* noted that "in the trivial case of a single transmit antenna, the single transmitter stream mode . . . might use a conventional 802.11a pilot scheme." AR-1007: 9:17-19.

Van Zelst discloses multiple methods of generating pilot tone sequences, such as by using the matrices in Figures 4(a)-(c), where the rows corresponded to different spatial streams and the columns corresponded to different symbol periods. AR-1007: 6:19-30. Figure 4(a) had a 2x2 Walsh-Hadamard (WH) matrix that could be used for a two spatial stream transmitter, such that the streams would have had the same polarity for the first symbol period and an opposite polarity for the next. AR-1007: 6:25-35. These pilot sequences could be multiplied by a pseudorandom number (PN) sequence, like that in 17.3.5.9 of the IEEE 802.11a standard, and the pilot signals could be transmitted over the pilot OFDM subcarriers used in 802.11a: -21, -7, 7, and 21. AR-1007: 7:38-50, 8:60-65; AR-1002 ¶ 209. The pilot tones in *Van Zelst* multiplied the 802.11a pilot scheme with a WH matrix for spatial streams one, and two are:

Antenna 1								
OFDM Symbol								
	Data							
Subcarrier	0	1	2	3	4	5	6	7
-21	1	1	1	1	-1	-1	-1	1
-7	1	1	1	1	-1	-1	-1	1
7	1	1	1	1	-1	-1	-1	1

21	-1	-1	-1	-1	1	1	1	-1

Antenna 2								
OFDM Symbol								
	Data							
Subcarrier	0	1	2	3	4	5	6	7
-21	1	-1	1	-1	-1	1	-1	-1
-7	1	-1	1	-1	-1	1	-1	-1
7	1	-1	1	-1	-1	1	-1	-1
21	-1	1	-1	1	1	-1	1	1

AR-1002 ¶ 209. This methodology allows for antenna diversity by changing the relationship between transmitted pilot tones, and makes spectral flatness less of an issue and complete fading less likely. AR-1007: 9:20-26.

1. *Van Zelst* Priority Date

Van Zelst was filed on July 21, 2005, and claims priority to a provisional patent application filed on July 22, 2004. AR-1007: [22], [60]. To the extent that the ’400 Patent is found to be entitled to the filing date of its foreign counterparts, Petitioners demonstrate that *Van Zelst* is entitled to the priority date of its provisional application because “the disclosure of the provisional application provides support for the claims in the reference patent in compliance with §112, ¶1.” *Dynamic Drinkware, LLC v. Nat'l Graphics, Inc.*, 800 F.3d 1375, 1381 (Fed. Cir. 2015). As identified in the chart below, the provisional application provides §112, ¶1 support for one of *Van Zelst*’s claims. AR-1002: ¶¶ 211-213.

***Van Zelst* Claim**	**Provisional Application**
1. In a wireless transmitter having a plurality of spatial streams differentiable at a receiver,	AR-1009, pp. 2-5
wherein data is encoded and transmitted over a communication channel with pilot tones to provide the receiver with information about the effects of the communication channel or impairments on the spatial streams transmitted, a method comprising:	AR-1009, pp. 2-4.
identifying a plurality of symbol periods within which symbols representing some of the encoded data are to be transmitted;	AR-1009, pp. 2-4
identifying pilot tone values for the plurality of symbol periods,	AR-1009, pp. 2-4
wherein the identified pilot tone values are such that the receiver, when receiving at least some of the pilot tones having the identified pilot tone values, is provided with signals enabling the receiver to characterize the communication channel to obtain transmit stream diversity benefits, signals; and	AR-1009, pp. 2
wherein at least two nonzero pilot tone values are present over two spatial streams in a given symbol period; and	AR-1009, pp. 4
transmitting the symbols and the pilot tones over the plurality of spatial streams for the plurality of symbol periods.	AR-1009, pp. 2-4

C. Motivation to Combine *Narasimhan* and *Van Zelst*

A POSITA would have been motivated to combine the teachings of *Narasimhan* and *Van Zelst* because *Van Zelst*'s teachings of varying pilot signals when transmitting multiple data or spatial streams allowed a receiver to estimate phase noise, frequency offset, and/or transmit channels on each stream separately, and this provided diversity advantages. AR-1007: 1:41-43, AR-4:51-62; AR-1009: p.2; AR-1002: ¶ 298.

Both references relate to adding MIMO to OFDM systems like 802.11a. AR-1002: ¶¶ 298. *Narasimhan* taught a system that transmitted MIMO-OFDM signals from multiple transmit antennas using frame formats for MIMO-OFDM communications, where the frame formats were backward compatible with legacy 802.11a systems. AR-1006: 1:44-52, 2:14-22, 2:49-60; AR-1002: ¶ 300. *Narasimhan* further taught modifying the 802.11a transmitter to transmit multiple spatial streams from multiple transmit antennas, where a space frequency interleaver 204 separated data into multiple data streams, followed by modulation by QAM Mapping Units 206 that modulated each OFDM subcarrier for each data stream. This data was then coded, after which processing chains 210 processed individual data streams. Each processing chain included pilot signal insertion, serial to parallel conversion, conversion to time domain, parallel to serial conversion, cyclic prefix insertion, and RF-processing. AR-1006: 3:41-61. *Narasimhan* taught transmitting

pilot signals using the legacy 802.11a pilot signal scheme. AR-1006: 8:1-5; AR-1002: ¶ 300.

Narasimhan also taught implementing transmit diversity, so the same signal was sent on multiple transmit antennas and the receiver received multiple copies of the signal and processed the copies to estimate the data received. AR-1006: 1:29-34. *Narasimhan* disclosed that combinations of diversity and spatial multiplexing could be used, and the system could initially select the combination and subsequently adjust the combination as channel conditions changed. AR-1006: 3:29-40; AR-1002: ¶ 301.

In systems that transmit spatial streams from different antennas, however, spatial streams will experience different fading. AR-1002: ¶ 302. *Van Zelst* solved this problem by varying pilot signal sequences by transmit antenna, and this allowed the receiver to isolate, combine, and track the pilot signals it received in a manner that made fading less likely. AR-1007: 9:19-27; AR-1009: p.5; AR-1002: ¶¶ 299,302.

Like *Narasimhan*, *Van Zelst* taught transmitting OFDM signals from multiple antennas, such as 802.11 OFDM systems implementing MIMO. AR-1007: 1:24-31, 1:41-43; AR-1009: p.2. *Van Zelst* also disclosed using the 802.11a pilot signal scheme, stating that its distinguishable set of pilot signal sequences could be modified by the pn sequence of pilot signal values in 802.11a. AR-1007:7:38-47;

AR-1009: p.2. *Van Zelst* also noted that in the case of a single transmit antenna, the conventional 802.11a pilot scheme that was used in *Narasimhan* could be used. AR-1007: 9:16-18; AR-1009: p.4; AR-1002: ¶ 303. *Narasimhan* and *Van Zelst* thus both disclose modifying 802.11a to support MIMO and are thus from the same field of art as each other and the '400 patent. AR-1002: ¶ 304. A POSITA would look to the teachings of *Van Zelst* when seeking to improve *Narasimhan*. AR-1002: ¶ 304.

Van Zelst taught using a distinguishable set of pilot sequences transmitted over multiple spatial streams, where each spatial stream transmitted a different set of pilot sequences. AR-1007: 1:44-61; AR-1009: pp. 2, 5. This enabled a receiver to track phase noise, frequency offset, and/or transmit channels by transmit antenna and/or spatial stream. AR-1007: 6:4-9; AR-1009: p.2. This improved transmission quality and diversity reception. AR-1002: ¶ 305. These pilot sequences were varied by time and by spatial stream, with each pilot signal sequence multiplied by the pilot sequence in the 802.11a standard used in *Narasimhan*. AR-1007: 6:19-7:50; AR-1009: pp. 2-3; AR-1006: 8:1-7; AR-1002 ¶ 306. This addressed the situation where two transmissions are identical and cancelled each other out, enabling transmit diversity and allowing the transmission to survive fading. AR-1007: 6:65-7:3; AR-1009: p.5; AR-1002: ¶ 306.

A POSITA would thus be motivated to take *Van Zelst*'s teachings of varying pilot signals when transmitting multiple spatial streams and modify the pilot signal

insertion process of *Narasimhan* because it would enhance receiver performance in *Narasimhan*'s system by allowing a receiver to more efficiently separate the transmission of multiple spatial streams. This would improve system performance, and would apply when using spatial multiplexing and transmit diversity. AR-1002: ¶ 307.

The teachings in *Van Zelst* are also compatible with the teachings in *Narasimhan*, because both references disclose modifying 802.11a to support MIMO, and pilot signal insertion in *Narasimhan* is done separately for each spatial stream. AR-1006: FIG. 2; AR-1002: ¶ 308. Both references disclose using the base pilot sequence from 802.11a, and *Van Zelst* discloses using a conventional 802.11a pilot scheme when using a single transmit antenna, which is the same pilot scheme used in *Narasimhan*. AR-1002: ¶ 308.

Further, because *Narasimhan* disclosed inserting pilot signals separately for each spatial stream, applying *Van Zelst*'s teachings to *Narasimham* would only require modifying the pilot signal insertion blocks 212 of *Narasimhan*, and would only require that the 802.11a pilot sequence used in *Narasimhan* be multiplied by a given row of the matrices disclosed in Figure 4 of *Van Zelst*. AR-1002: ¶ 309. This would be a trivial modification well within the skill of a POSITA, and would only involve the addition of a known element to obtain predictable results in a way that was well-understood. AR-1002: ¶ 310.

D. Claim 1

[1preamble] A transmitting apparatus for transmitting an OFDM signal, comprising:

To the extent the preamble is limiting, *Narasimhan* discloses or renders it obvious. *Narasimhan* discloses transceiver "transmitter" 102 including transmit section 110 that uses complies with IEEE 802.11 standards using OFDM signals. AR-1006: 2:49-36; AR-1002: ¶ 312.

[1a] a generator operative to generate a burst signal having a first burst format where a first Non-MIMO training signal, a first Non-MIMO signal, a MIMO signal, a MIMO training signal, and first data are arranged in the stated order; and

Narasimhan discloses this limitation or renders it obvious. The '400 Patent does not use the term "generator" or "generate" anywhere in the specification, but does disclose a data separation unit 20 and a modulation unit 22 which includes an error correcting unit, interleaving unit, preamble adding unit, IFFT unit, GI Unit, and Quadrature Modulation unit. AR-1001: 12:44-13:28. A POSITA would understand that some or all of these elements may be used to generate a burst signal. AR-1002: ¶ 314.

Figure 2 of *Narasimhan* similarly discloses a modified version of the 802.11a transmitter, and a POSITA would understand was similar to an 802.11a PPDU encoding process for generating a burst signal. AR-1006: 3:41-45; AR-1002: ¶ 316; §VIII.B; §IX.B.

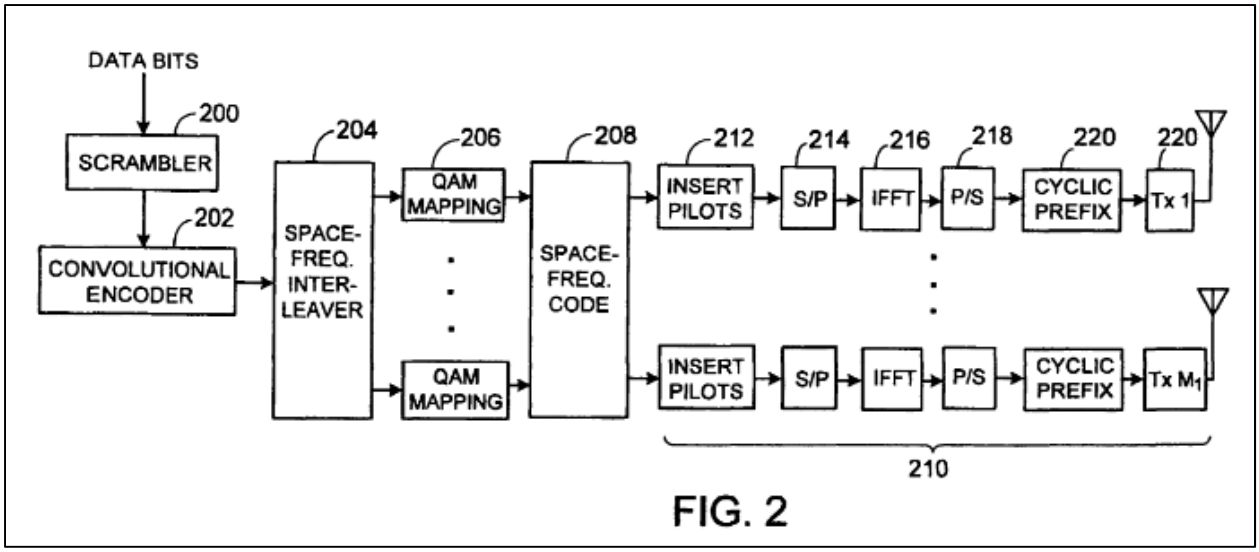

FIG. 2

Narasimhan also discloses frame formatter 120 that "generates a MIMO-OFDM frame." AR-1006: 8:40-45. A POSITA would understand that this frame formatter 120 creates MIMO-OFDM frames that are passed to the transmitter in Figure 2. AR-1002: ¶¶ 317-318.

The MIMO-OFDM frame (*i.e.*, first burst signal) generated by the frame formatter is depicted in Figure 6, annotated below with mappings to the claimed frame format. AR-1006: 6:23-26.

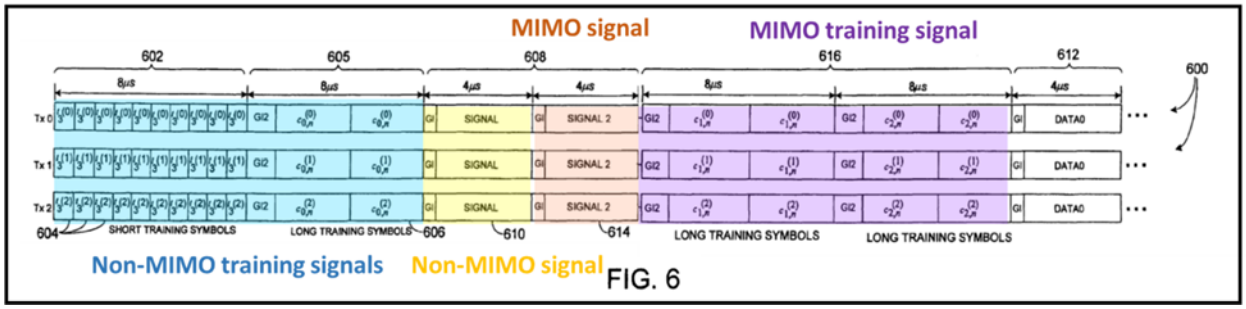

FIG. 6

"Like the IEEE 802.11a frame 500," the MIMO-OFDM frame includes a first Non-MIMO training signal in blue, comprised of a legacy short and long training symbols

from 802.11a. AR-1006: 6:1-12, 6:31-35; AR-1002: ¶¶ 320-321. Next, the frame includes, in yellow, SIGNAL symbol 610 after long preamble 605, which is substantially the same as the 802.11a SIGNAL symbol and was the first Non-MIMO signal. AR-1006: 6:31-35; AR-1002: ¶ 322. The MIMO-OFDM frame then included a second SIGNAL symbol in orange, SIGNAL2 614, with MIMO-OFDM specific information including the number of transmit antennas and the spatial multiplexing rate. AR-1006: 6:35-39. This was a MIMO signal. AR-1002: ¶ 323.

The MIMO-OFDM frame then included supplemental long preambles 616 in purple that included additional long training symbols to train other antennas, followed by DATA 612. AR-1006: 6:39-41, 6:35. A POSITA would understand that the supplemental long preambles 616 are a MIMO training signal, and that DATA 612 is a first data. AR-1002: ¶ 324.

[1b] a transmitter operative to transmit the burst signal generated by the generator, wherein

Narasimhan discloses or renders obvious this limitation. Figure 1 discloses a transmitter 102 with a transmit section 110 that transmits a burst signal received from the frame formatter 120. AR-1006: 2:49-57, 6:26-29; AR-1002: ¶¶ 327-328. This transmit section 110 was illustrated in Figure 2, above in claim [1a], and included an RF processing block that did digital-to-analog conversion and baseband-to-RF conversion. AR-1006: 3:41-45; 3:60-61.

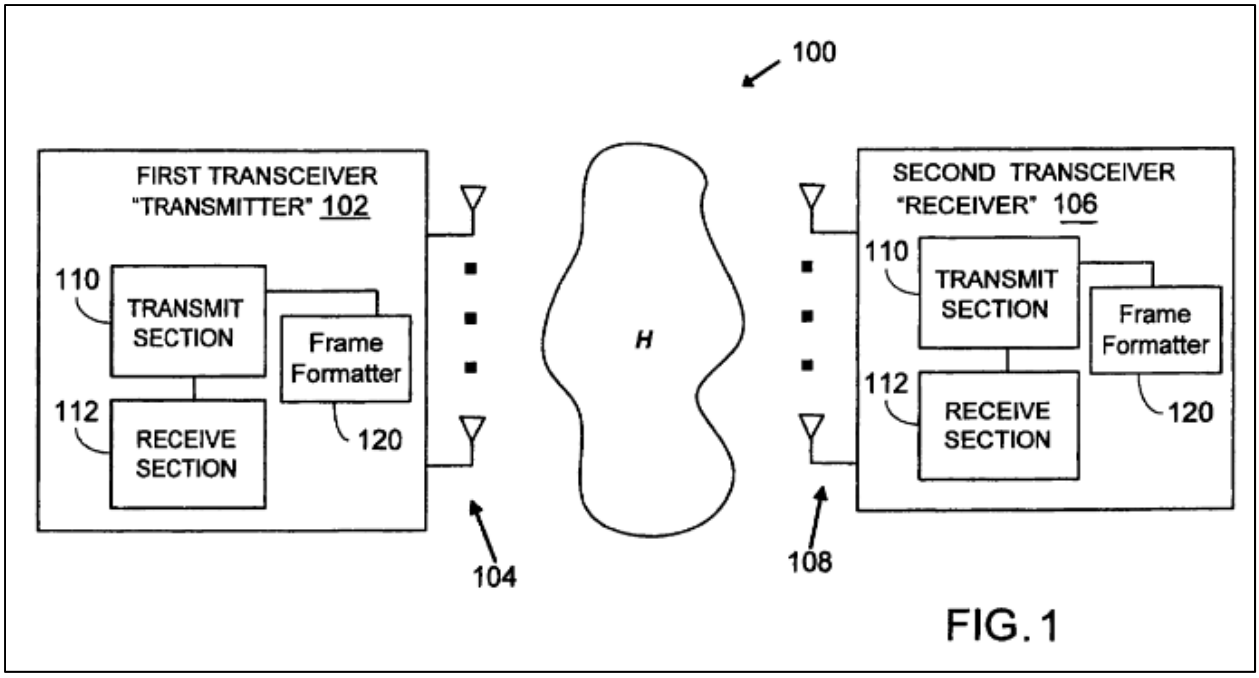

FIG. 1

[1c] a subcarrier carrying a first pilot signal included by frequency-division multiplexing in the first data in the first burst format of the burst signal generated by the generator is the same as a subcarrier carrying a second pilot signal included by frequency-division multiplexing in second data in a second format where a second Non-MIMO training signal, a second Non-MIMO signal, and the second data are arranged in the stated order,

Narasimhan discloses this limitation or renders it obvious.

Narasimhan also discloses transmitting a second burst signal in legacy (non-MIMO) mode, where frame formatter 120 generates the 802.11a compliant frames disclosed in color-coded Figure 5. AR-1006: 7:31-37, 8:25-39; AR-1002: ¶ 331. The legacy frame includes short preamble 501, long preamble 502, SIGNAL 504, and DATA 506. AR-1006: 6:1-22. A POSITA would understand that, as in claim limitation [1a], the blue short preamble 501 and long preamble 502 constitute a

second non-MIMO training signal, that yellow SIGNAL 504 is a second non-MIMO signal, and that second DATA 506 is a second data. AR-1002: ¶¶ 332-333.

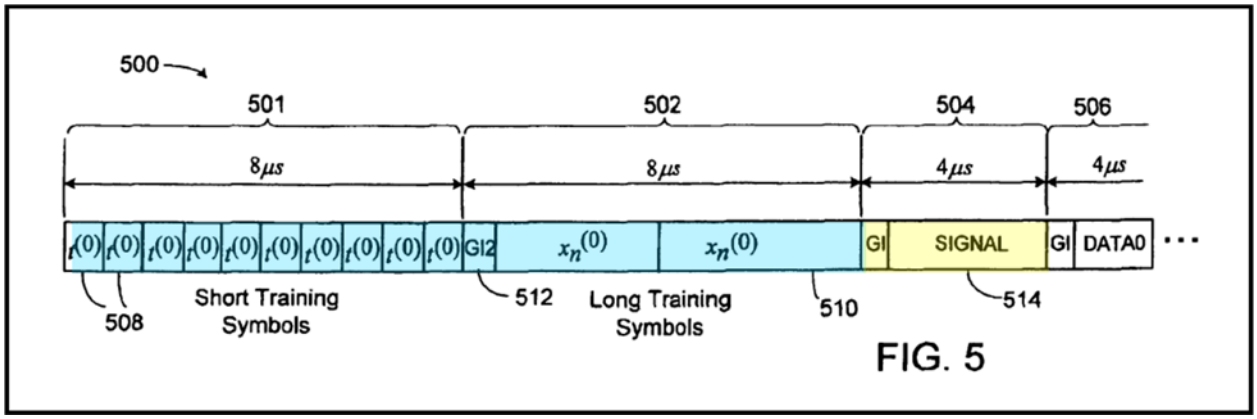

FIG. 5

Because this legacy signal is an 802.11a signal, it uses the 802.11a pilot signal subcarriers in the data symbols, -21, -7, 7, and 21. AR-1002: ¶ 334; AR-1005: p. 22.

Narasimhan disclosed using OFDM subcarriers "-21, -7, 7, and 21 for pilot tones in each data MIMO-OFDM symbol." AR-1006: 8:1-2. These are the same subcarriers used for pilot signals in legacy 802.11a and are the same subcarriers used in legacy mode. AR-1002: ¶ 335.

[1d] a modulation scheme of the first pilot signal is the same as a modulation scheme of the second pilot signal,

Narasimhan discloses or renders obvious this limitation. *Narasimhan* discloses that "the pilot tones consist of modulating the first spatial substream with IEEE 802.11a MPSK pilot tone sequence" in each MIMO-OFDM data symbol, or the first pilot signal. AR-1006: 8:1-5. A POSITA would understand that the

reference to IEEE 802.11a MPSK pilot tone sequence means the BPSK modulation scheme that is used in 802.11a, and this would be the same modulation would be used in the legacy mode transmissions. AR-1002: ¶¶ 338-339; AR-1005: p.22; §X.A.

[1e] a pattern of the first pilot signal is different from a pattern of the second pilot signal, and

Narasimhan and *Van Zelst* render this limitation obvious.

Narasimhan disclosed transmitting frames in legacy (non-MIMO) mode, in which case a frame formatter generated 802.11a-compliant frames. AR-1006: 8:25-39. These legacy frames included pilot signals modulated with the 802.11a pilot signal sequence shown below:

OFDM Symbol								
	Data							
Subcarrier	0	1	2	3	4	5	6	7
-21	1	1	1	1	-1	-1	-1	1
-7	1	1	1	1	-1	-1	-1	1
7	1	1	1	1	-1	-1	-1	1
21	-1	-1	-1	-1	1	1	1	-1

AR-1006: 8:1-5; AR-1002: ¶ 342.

Narasimhan also disclosed transmitting MIMO-OFDM frames when in MIMO-OFDM mode. AR-1006: 8:40-42. *Van Zelst* taught using "a distinguishable set of pilot sequences per spatial channel" in a MIMO-OFDM system. AR-1007: 7:26-29, 1:24-27; AR-1009: pp.2-4. *Van Zelst* further taught using the 802.11a pilot

scheme and combining it with a 2x2 W-H matrix, so that the pilots were inverted for every other OFDM symbol on the second spatial stream. AR-1007: 9:20-26; AR-1009: p.3; AR-1002: ¶ 344. This means that the pilot signals on the first spatial stream were the same as the legacy 802.11a pilot scheme used in *Narasimhan*, the pattern of the second pilot signal, but the pilot signal sequence on the second spatial stream was different because signals were inverted on every other OFDM symbol. AR-1002: ¶ 345.

Antenna 2								
OFDM Symbol								
	Data							
Subcarrier	0	1	2	3	4	5	6	7
-21	1	-1	1	-1	-1	1	-1	-1
-7	1	-1	1	-1	-1	1	-1	-1
7	1	-1	1	-1	-1	1	-1	-1
21	-1	1	-1	1	1	-1	1	1

AR-1002 ¶ 345. Thus, the pattern of the first pilot signal, the transmission on antenna 2, and the second pilot signal is different when the pilot signal disclosure of *Van Zelst* is combined with the teachings of *Narasimhan*.

As stated above in section §X.A, making this combination would only involve multiplying the 802.11a pilot signal sequence with a row in a WH matrix, and this would be a trivial modification well within the skill of a POSITA. Making this combination would improve the system of *Narasimhan* by allowing a receiver to

separately estimate phase noise, frequency offset, and transmit channels per spatial stream, and also to enable transmit diversity benefits. AR-1002: ¶ 347.

[1f] the transmitter transmits the burst signal from a plurality of antennas such that the signal transmitted from a given one antenna is shifted in timing with respect to the signal transmitted from another antenna in a cyclical manner.

Narasimhan discloses this limitation or renders it obvious. *Narasimhan* discloses that space-frequency code module 208 could use "generalized cyclic delay diversity," such that "symbol A may be transmitted on antenna Tx0, and then on antenna Tx1 after a cyclic delay L2, and then on antenna Tx2 after a cyclic delay L3." AR-1006: 5:34-51; AR-1002: ¶¶ 350-351. This was done by applying a code matrix that was an expression of cyclic delay diversity in the frequency domain, and would shift the timing of a signal transmitted from one antenna with respect to the signal transmitted from another antenna, regardless of which claimed signal is the subject of the claim limitation. AR-1002: ¶¶ 352-354.

E. Claim 2

[2preamble] A transmitting method for transmitting an OFDM signal, comprising:

Narasimhan discloses this limitation for the reasons discussed in claim [1preamble].

[2a] generating a burst signal having a first burst format where a first Non-MIMO training signal, a first Non-MIMO signal, a MIMO signal, a MIMO training signal, and first data are arranged in the stated order; and

Narasimhan discloses this limitation for the reasons discussed in claim [1a].

[2b] transmitting the burst signal, wherein

Narasimhan discloses this limitation for the reasons discussed in claim [1b].

[2c] a subcarrier carrying a first pilot signal included by frequency-division multiplexing in the first data in the first burst format is the same as a subcarrier carrying a second pilot signal included by frequency-division multiplexing in second data in a second format where a second Non-MIMO training signal, a second Non-MIMO signal, and the second data are arranged in the stated order,

Narasimhan discloses this limitation for the reasons discussed in claim [1c].

[2d] a modulation scheme of the first pilot signal is the same as a modulation scheme of the second pilot signal,

Narasimhan discloses this limitation for the reasons discussed in claim [1d].

[2e] a pattern of the first pilot signal is different from a pattern of the second pilot signal, and

Narasimhan and *Van Zelst* render this limitation obvious for the reasons discussed in claim [1e].

[2f] the transmitting transmits the burst signal from a plurality of antennas such that the signal transmitted from a given one antenna is shifted in timing with respect to the signal transmitted from another antenna in a cyclical manner.

Narasimhan discloses this limitation for the reasons discussed in claim [1f].

XI. Exercise of Discretion under §325(d) not Warranted

Grounds 1 and 3 of this Petition rely on art and arguments that were not before the Office during prosecution, and so Petitioners submit that §325(d) does not apply to this Petition.

As referenced above, Ground 2 is based on *TGn-Sync* in view of 802.11a. Petitioners acknowledge that *TGn-Sync* was submitted in an IDS over six years after the application for the '400 Patent was filed. It was not cited by the Office during prosecution. Also, 802.11a was not before the Office during prosecution, so the combination of *TGn-Sync* and *802.11a* was never before the Office.

The Board considers several factors when exercising its discretion when the same or substantially the same prior art or arguments are presented:

(1) the similarities and material differences between the asserted art and the prior art involved during examination;

(2) the cumulative nature of the asserted art and the prior art evaluated during examination;

(3) the extent to which the asserted art was evaluated during examination, including whether the prior art was the basis for rejection;

(4) the extent of the overlap between the arguments made during examination and the manner in which Petitioner relies on the prior art or Patent Owner distinguishes the prior art;

(5) whether Petitioner has pointed out sufficiently how the Examiner erred in its evaluation of the asserted prior art; and

(6) the extent to which additional evidence and facts presented in the Petition warrant reconsideration of the prior art or arguments.

Becton, Dickinson & Co. v. B. Braun Melsungen AG, IPR2017-01587, Paper 8 at 17-18 (Dec. 15, 2017) (informative). Here, factors 1 and 2 weigh in favor of institution because the combination of *TGn-Sync* and *802.11a* was never before the Office. Factors 3 and 4 also weigh in favor of institution because *TGn-Sync* itself was not cited or relied upon by the examiner and was not the basis for a rejection. Finally, factors 5 and 6 weigh in favor of institution because the Office never substantively evaluated *TGn-Sync* and the combination of *TGn-Sync* and *802.11a* was never considered.

Furthermore, the *General Plastic* Factors Do Not Support the Board Denying Institution. This is the first and only Petition on the '400 Patent offered by Petitioners or to which Petitioners are real parties-in-interest. Although the Board is addressing the '400 Patent in another petition filed by Intel (IPR2018-01543), Petitioners had no involvement in that IPR and are not seeking to join the previously filed IPR. Patent Owner has not filed a preliminary response there, nor have institution decisions been entered by the Board. Thus, *General Plastic* factors 1, 3, 5, 6, and 7, as set forth in *Gen. Plastic Indus. Co. v. Canon Kabushiki Kaisha*, IPR2016-01357, Paper 19 (PTAB Sept. 6, 2017), support allowing Petitioners the opportunity to independently challenge the validity of the '400 Patent. The remaining two factors are not particularly relevant because Petitioners are not filing a second petition.

With respect to §325, this is Petitioners' first petition directed to the '400 Patent. While the references in Ground 2, *TGn-Sync* and *802.11a* are also asserted in Intel's Petition, Grounds 1 and 3 were not asserted in the previous petition and are based on references that were not considered during prosecution. For these reasons, the grounds presented in this Petition are not cumulative to those presented in the Intel petition or otherwise cumulative of previously considered prior art. Thus, the Board should not exercise its discretion to deny institution.

XII. CONCLUSION

For the foregoing reasons, Petitioners respectfully request institution of an *inter partes* review, and cancellation of claims 1-2 of the '400 Patent.

Respectfully submitted,

Dated: September 14, 2018

/Christopher J. Tyson/
Christopher J. Tyson
Reg. No. 63,850
Duane Morris LLP
505 9th Street NW, Suite 1000

XIII. CERTIFICATE OF WORD COUNT

Pursuant to 37 C.F.R. §42.24, Petitioner hereby certifies, in accordance with and in reliance on the word count provided by the word-processing system used to prepare this Petition, that the number of words in this Petition is 13,641. Pursuant to 37 C.F.R. §42.24(d), this word count excludes the table of contents, table of authorities, mandatory notices under §42.8, certificate of service, certificate of word count, appendix of exhibits, and any claim listing.

Dated: September 14, 2018

/Christopher J. Tyson/
Christopher J. Tyson
Reg. No. 63,850
Duane Morris LLP
505 9th Street NW, Suite 1000
Washington, D.C. 20004

CERTIFICATION OF SERVICE ON PATENT OWNER

Pursuant to 37 C.F.R. §§ 42.6(e), 42.8(b)(4) and 42.105, the undersigned certifies that on September 14, 2018, a complete and entire copy of this Petition for *Inter Partes* Review of U.S. Patent No. 8,295,400 and all supporting exhibits were served via Federal Express, postage prepaid, to Hera Wireless S.A. by serving the correspondence address of record for the '400 Patent:

DC PATENT LAWYERS, PLLC
900 17th Street, NW.
Suite 320
Washington, DC 20006

and upon counsel of record for the Patent Owner in the litigation before the United States District Court for the District of Delaware:

Timothy Devlin
James Michael Lennon
DEVLIN LAW FIRM LLC
1306 North Broom Street, Suite 1
Wilmington, DE 19806

/Christopher J. Tyson/
Christopher J. Tyson
Reg. No. 63,850
DUANE MORRIS LLP
505 9th Street NW, Suite 1000
Washington, D.C. 20004
P: (202) 776-7800
F: (202) 776-7801
CJTyson@duanemorris.com

ATTORNEY FOR PETITIONERS