US 20120104185A1

(19) United States

(12) Patent Application Publication

(10) Pub. No.: US 2012/0104185 A1

(43) Pub. Date: May 3, 2012

CARROLL

(54) **PORTABLE COMPUTER HOLDER**

(76) Inventor: **James J. CARROLL**, Philadelphia, PA (US)

(21) Appl. No.: **12/916,092**

(22) Filed: **Oct. 29, 2010**

Publication Classification

(51) **Int. Cl.**
H05K 5/02 (2006.01)
H05K 5/03 (2006.01)

(52) **U.S. Cl.** **248/27.1**; 248/145.6

(57) **ABSTRACT**

An apparatus and method for ergonomically and securely holding a portable computing device and standing the portable computing device at least partially upright on a flat surface are disclosed. The apparatus and method include a holder base with a front face and a rear face opposite the front face, the holder base being configured to hold a portable computing device at its front face by engaging distal edges of the portable computing device, a dome-shaped grip extending from the rear face of the holder base, the dome-shaped grip having at least one opening for receiving a user's finger, and a flange extending from the dome-shaped grip for supporting the holder base at an angle on a flat surface. The holder base may include a central portion configured to mount flush with a rear face of the portable computing device, a plurality of arms extending from the central portion at different angles, the plurality of arms also being configured to mount flush with the rear face of the portable computing device, and a curved lip at a distal end of each of the plurality of arms, each curved having a grooved portion configured to hold a distal edge of the portable computing device therein.

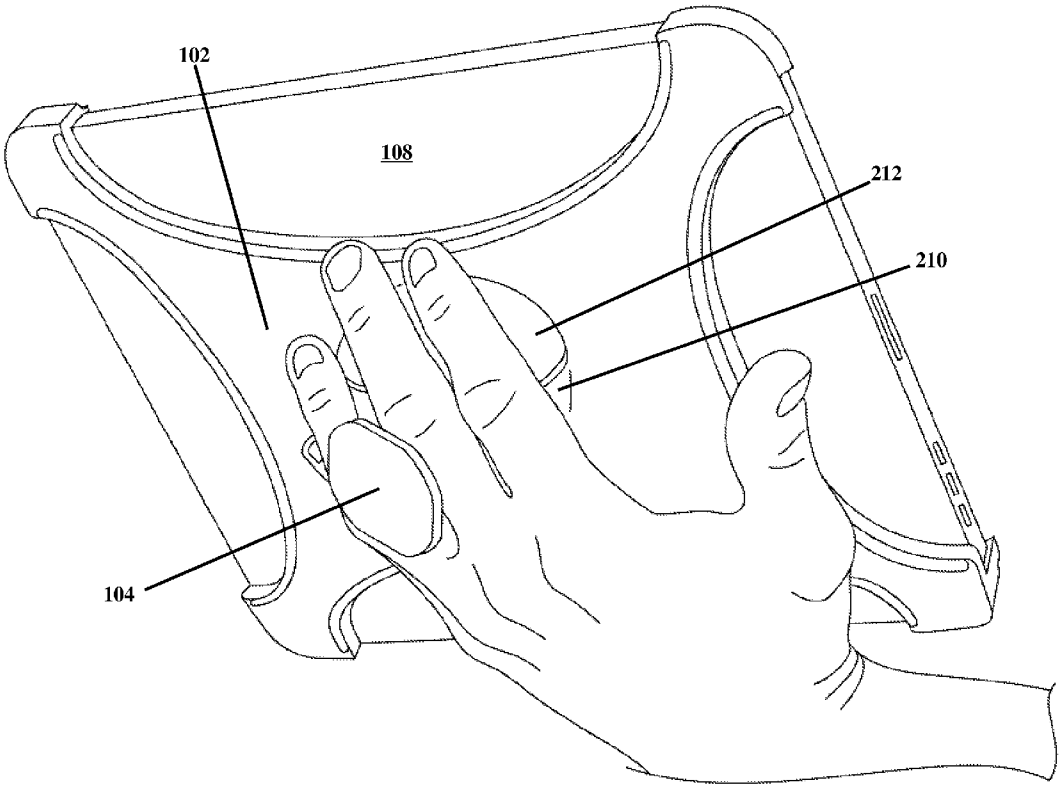

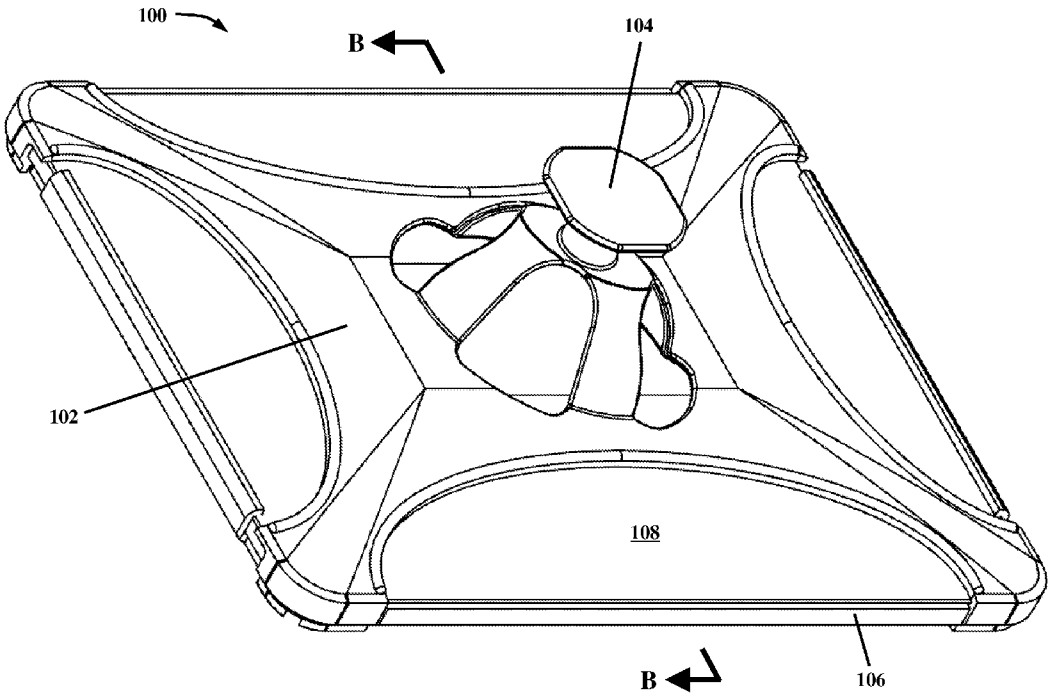

FIG. 1A

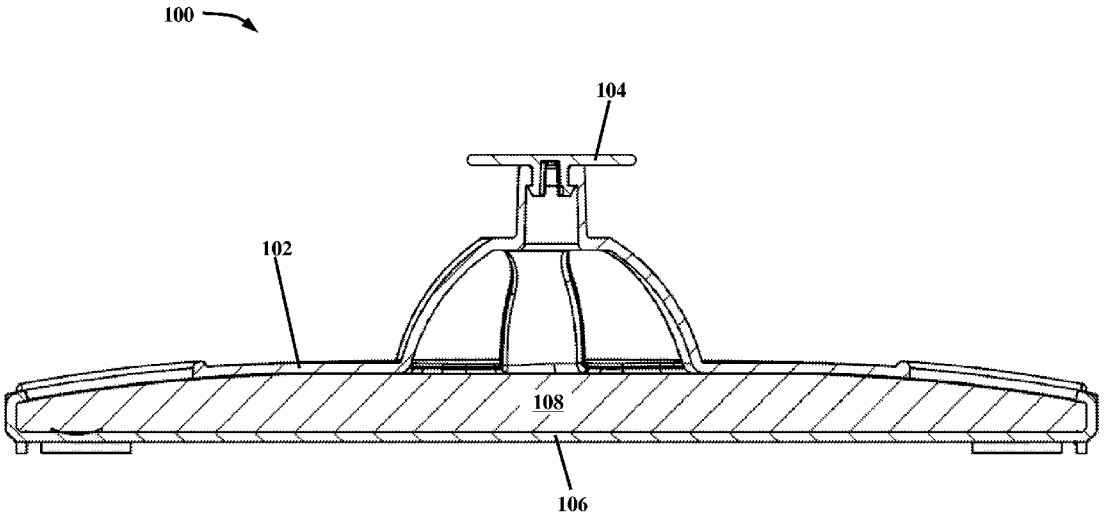

FIG. 1B

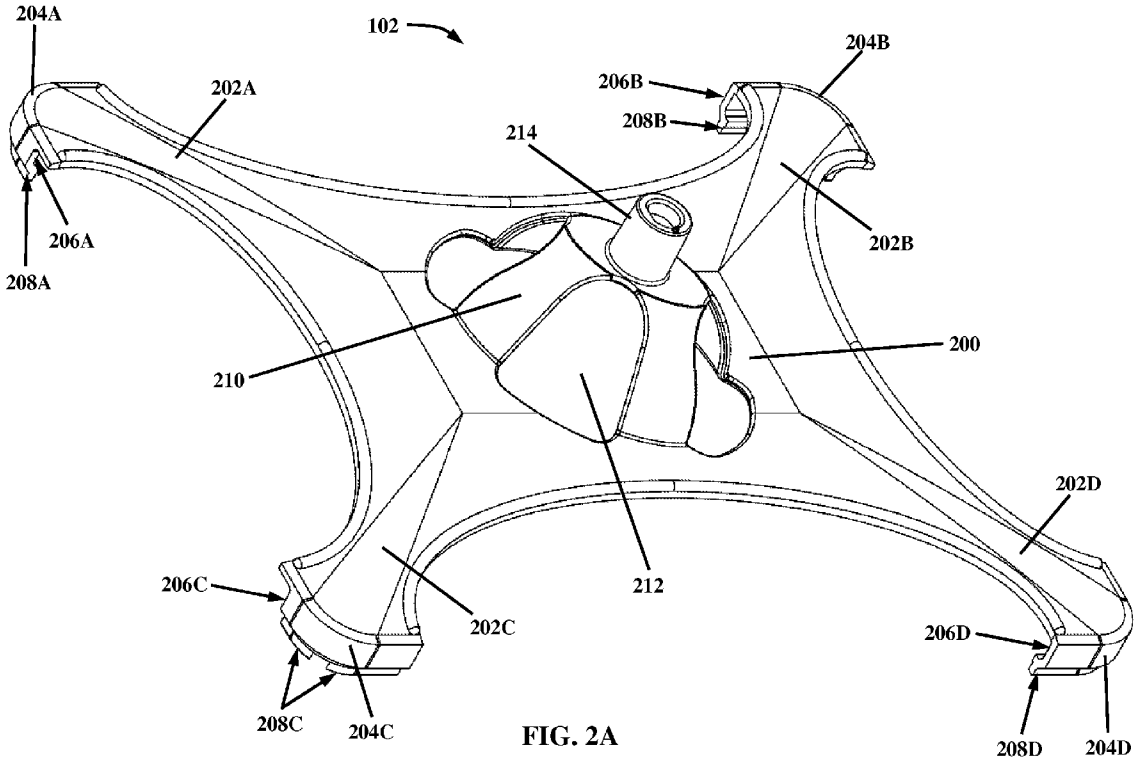
204A
102
204B
202A
206B
208B
214
206A
208A
202B
210
200
202D
206C
212
202C
206D
208C
204C
208D
204D

FIG. 2A

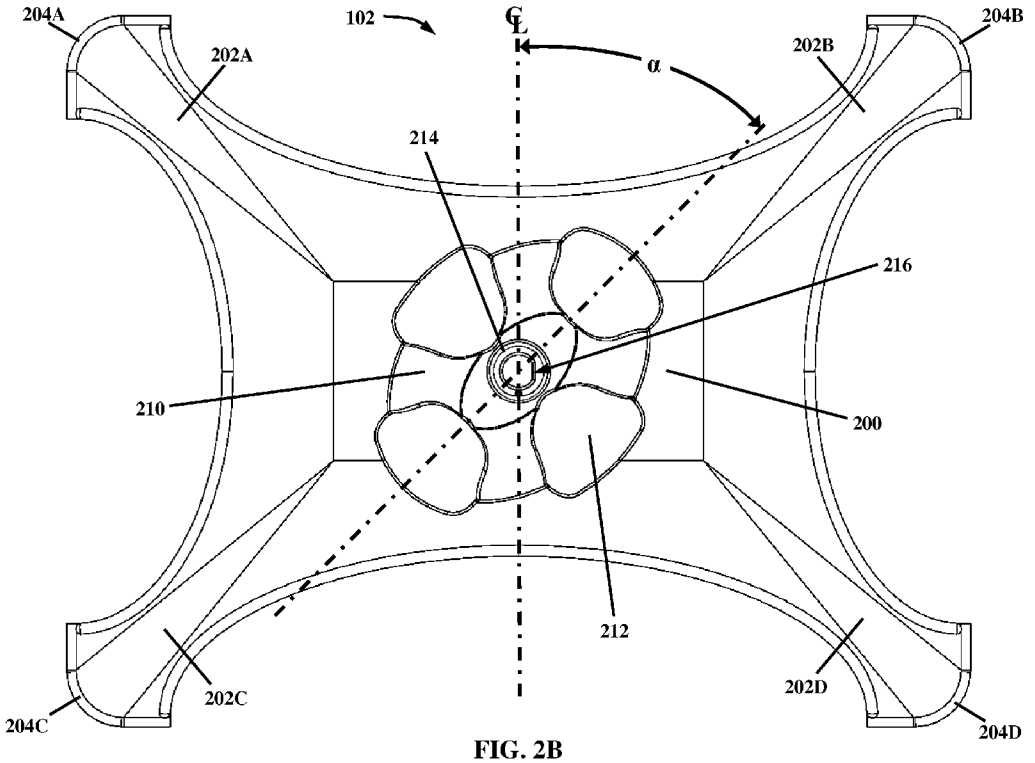
204A
102
CL
204B
202A
α
202B
214
216
210
200
212
202C
202D
204C
204D

FIG. 2B

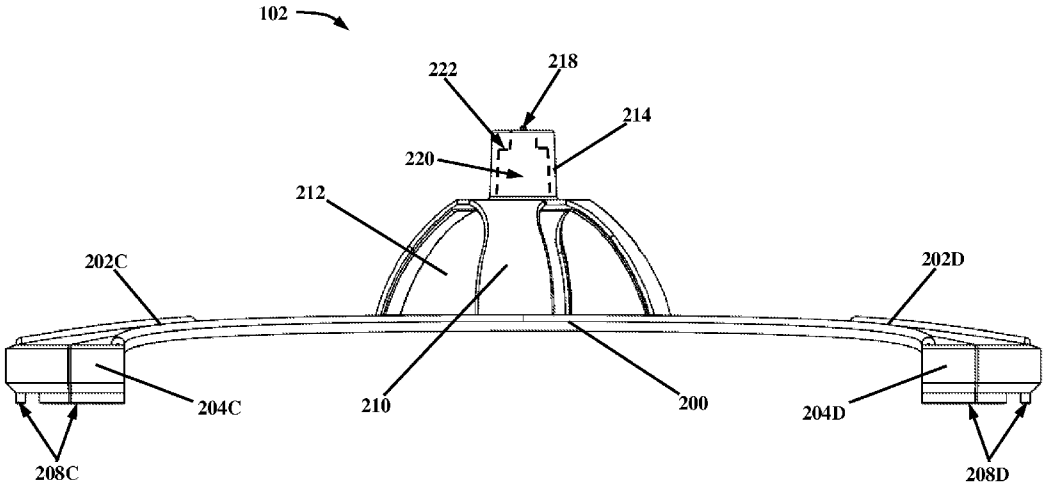

FIG. 2C

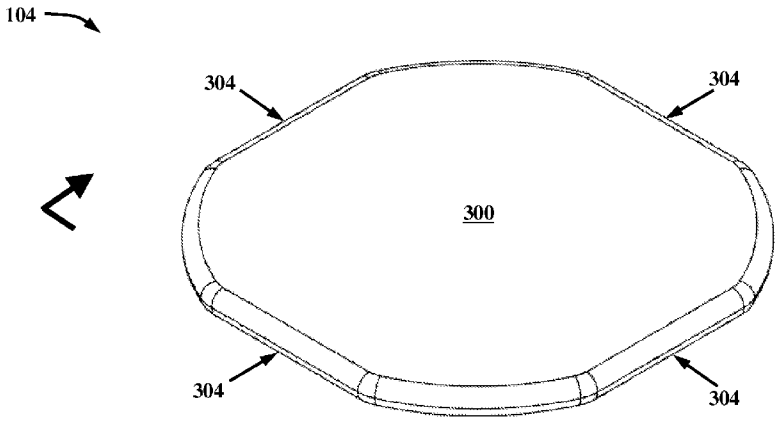

FIG. 3A

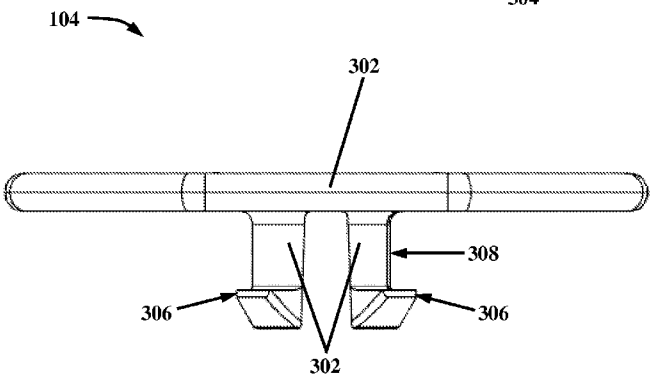

FIG. 3B

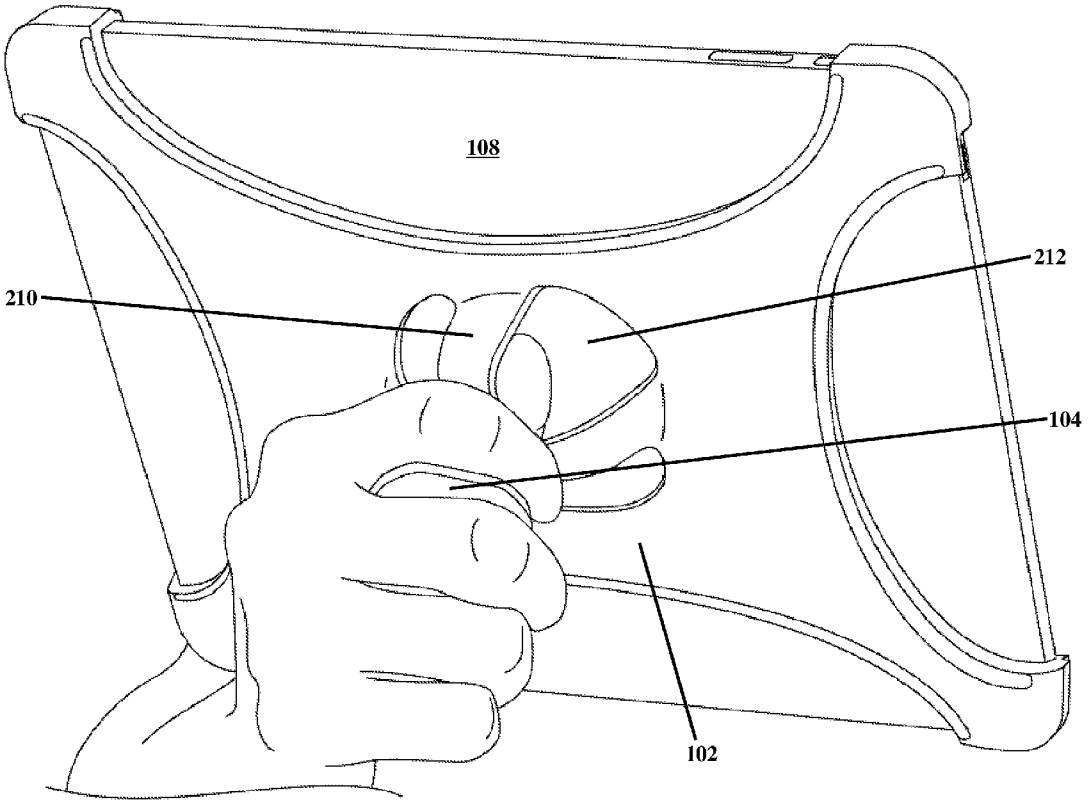

FIG. 4A

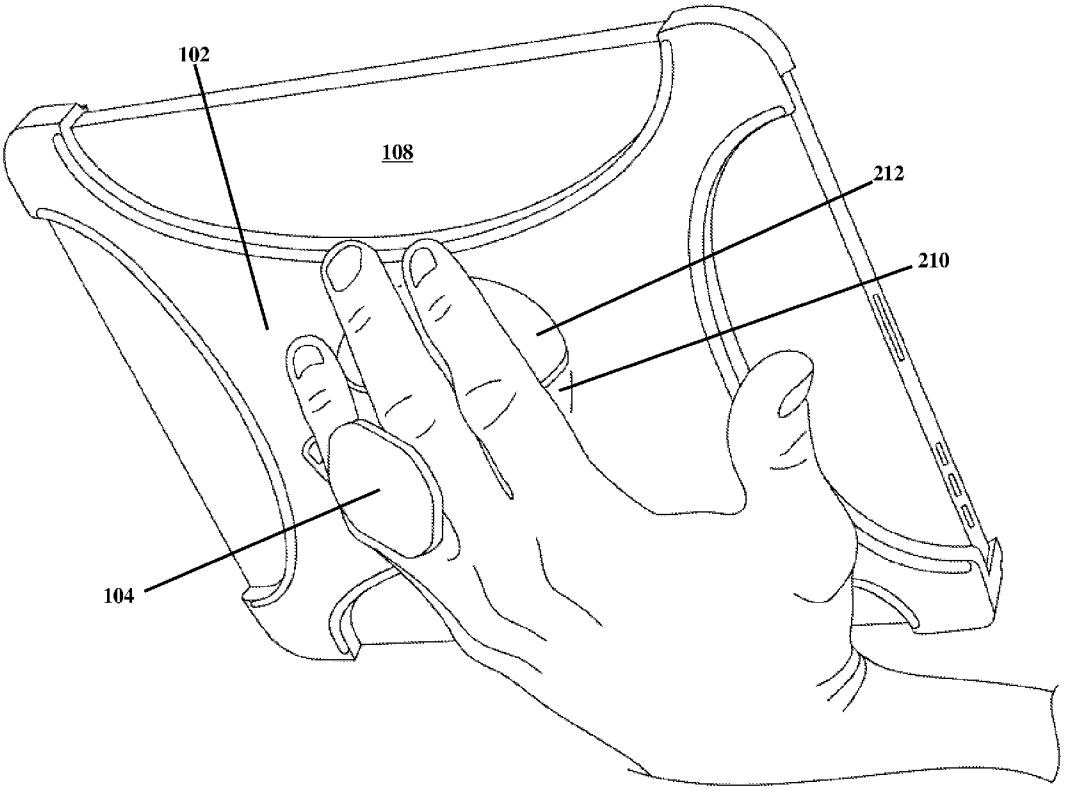

FIG. 4B

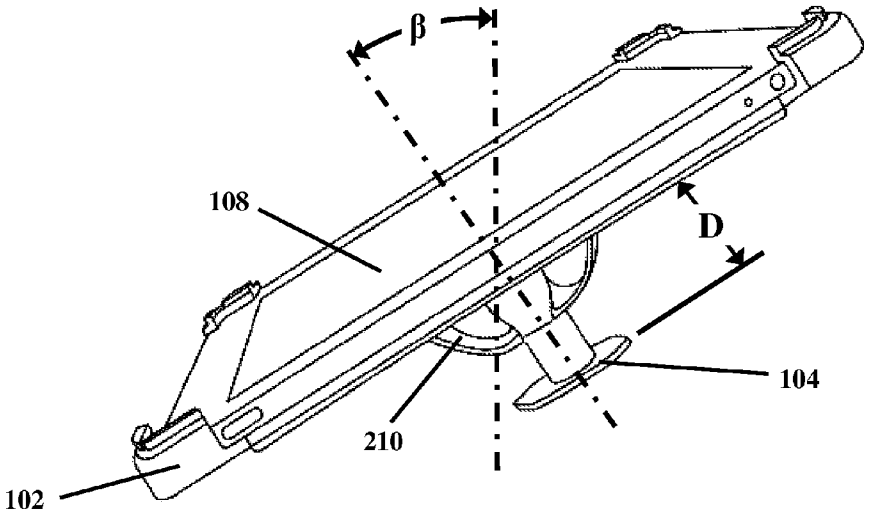

FIG. 5A

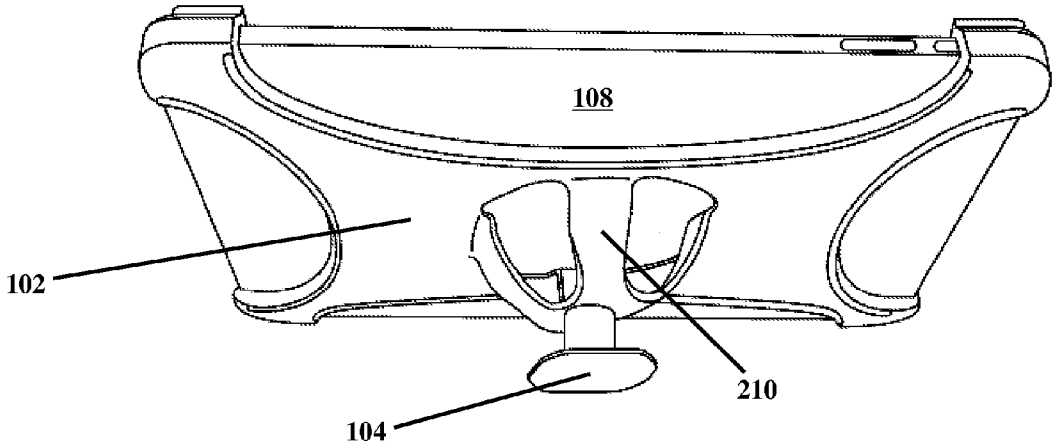

FIG. 5B

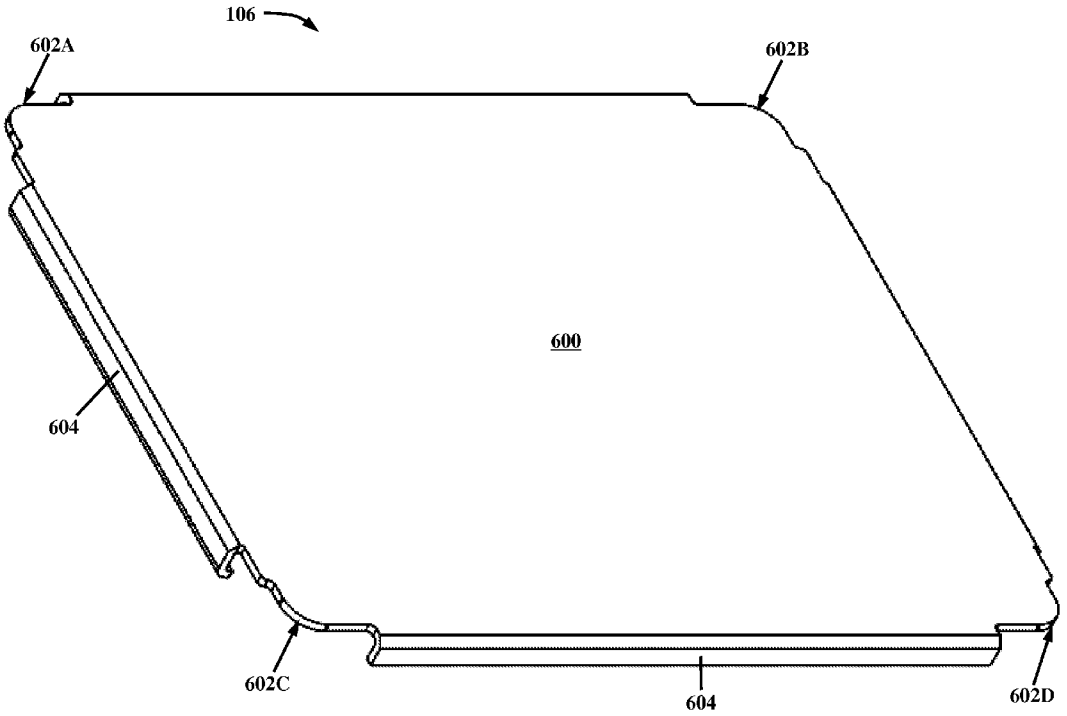

FIG. 6A

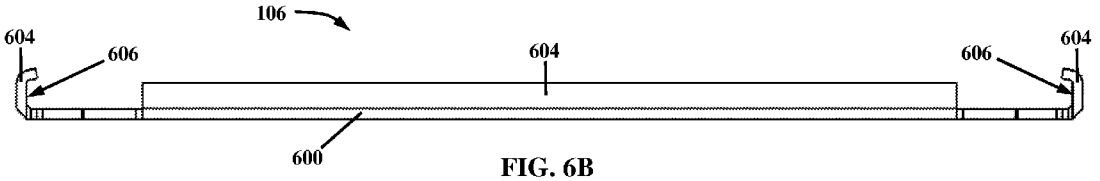

FIG. 6B

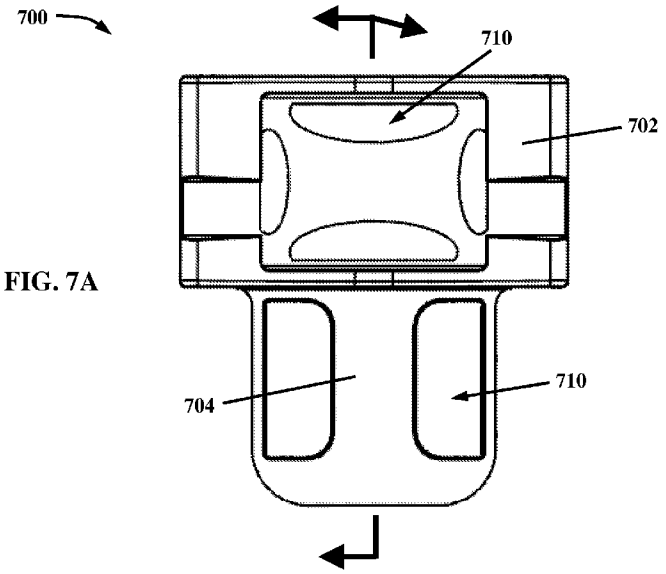

FIG. 7A

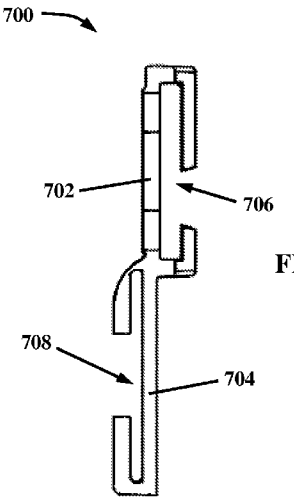

FIG. 7B

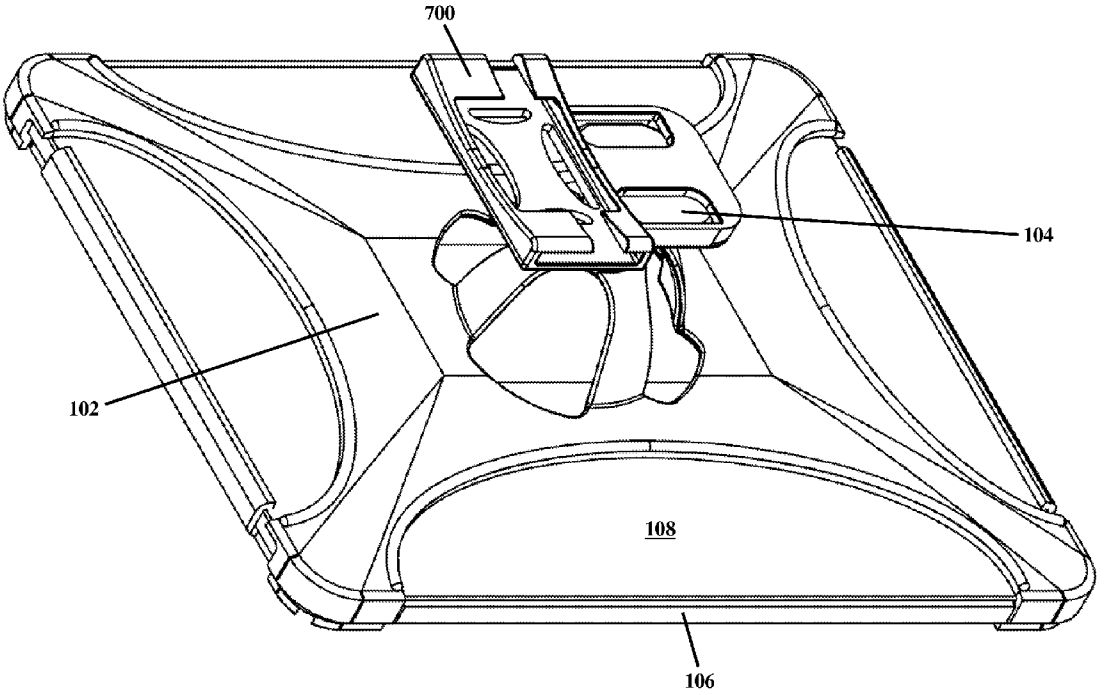

FIG. 7C

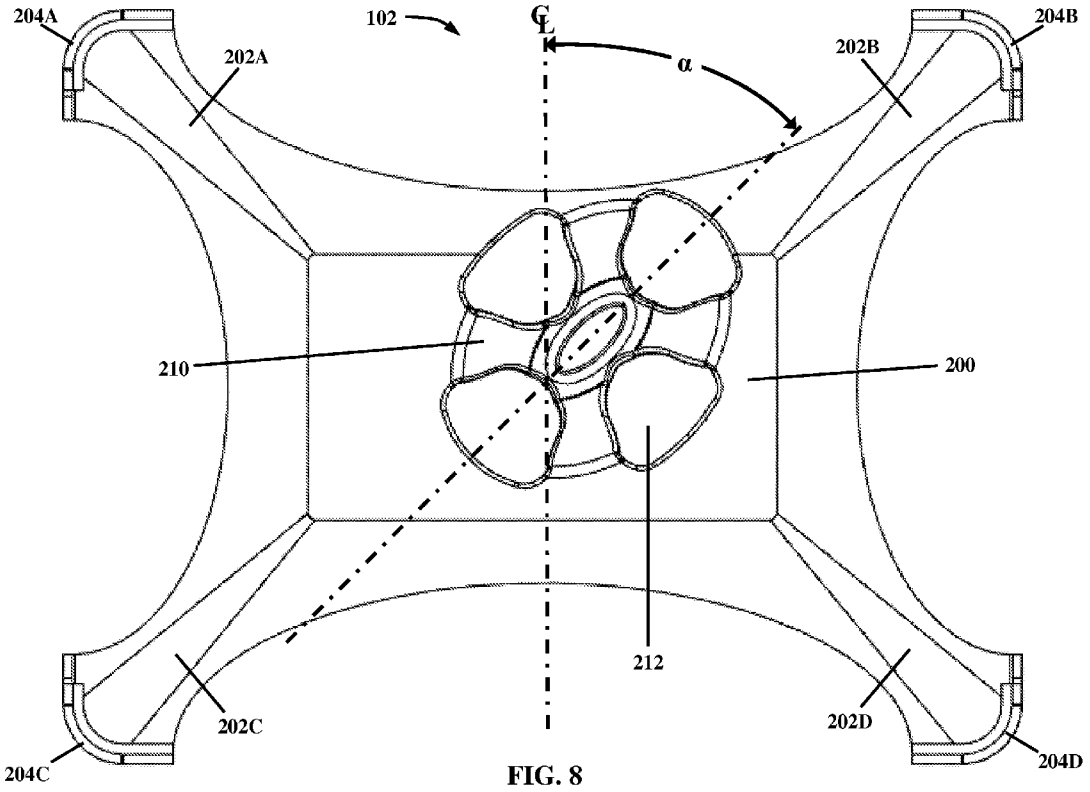

FIG. 8

PORTABLE COMPUTER HOLDER

BACKGROUND OF THE INVENTION

[0001] 1. Field of the Invention

[0002] The present invention relates to an apparatus and method for holding a portable computing device. In particular, the present invention relates to an apparatus and method for ergonomically and securely holding a portable computing device with one hand and for standing it at least partially upright on a work surface.

[0003] 2. Description of the Related Art

[0004] With the increasingly widespread availability of wireless communication network connectivity, such as via cellular phone data networks (e.g., 3G data networks, 4G data networks, etc.) and wireless internet networks (e.g., wireless fidelity (Wi-Fi) networks, wireless local area networks (WLANs), wide area networks (WANs), etc.), there has been a corresponding increase in the popularity of portable computing devices (e.g., tablet computers, KINDLE brand portable reading devices, IPAD brand portable multimedia devices, etc.). Such portable computing devices are designed to allow users to engage in various computer-related activities (e.g., browsing the internet, reading and sending e-mail, reading and drafting documents, data entry, shopping, etc.) away from a desk or other work surface (e.g., sitting on a couch, sitting on a subway train, standing up, etc.). Accordingly, they are relatively small in size so they can be more easily transported (e.g., in a purse or briefcase) while remaining large enough to provide a dynamic and meaningful user interface (e.g., a large display and a functional keyboard).

[0005] Portable computing devices are typically provided in the shape of a flat tablet or notebook. And because users will need at least one hand free to interact with the portable computing device via its user interface, the device will often need to be held only by the other hand. But the requirement that the portable computing device be large enough to provide a dynamic and meaningful user interface often makes gripping such tablet-shaped devices awkward, and even painful—particularly for prolonged periods of use. For example, merely wrapping the fingers of one hand around the peripheral edge of the device while using the other hand to interact with the user interface of the device can result in injuries to the fingers and/or wrist of the gripping hand after prolonged periods of use (e.g., Carpal Tunnel Syndrome). Moreover, when gripping such devices is awkward, users are more prone to drop and damage them. Accordingly, there is a need for an apparatus and method for ergonomically and securely holding a portable computing device with one hand.

[0006] In addition, because portable computing devices are typically provided in the shape of a flat tablet or notebook, they will lie flat on a desk or other work surface when placed thereon. That orientation is not ideal for interacting with the device because it does not provide a good angle from which the user can view the display of the user interface. Although stands for holding portable computing devices at a desirable viewing are known, such stands are generally bulky and, therefore, not suited for being carried around with the device (e.g., in a purse or briefcase). Moreover, those stands are not suitable for ergonomically and securely holding the device with one hand. Accordingly, there is a need for an apparatus and method that is not only suited for ergonomically and securely holding a portable computing device with one hand, but that is also suitable for standing it at least partially upright on a work surface.

SUMMARY OF THE INVENTION

[0007] To resolve at least the problems discussed above, it is an object of the present invention to provide an apparatus and method for ergonomically and securely holding a portable computing device and standing the portable computing device at least partially upright on a flat surface. The apparatus and method include a holder base with a front face and a rear face opposite the front face, the holder base being configured to hold a portable computing device at its front face by engaging distal edges of the portable computing device, a dome-shaped grip extending from the rear face of the holder base, the dome-shaped grip having at least one opening for receiving a user's finger, and a flange extending from the dome-shaped grip for supporting the holder base at an angle on a flat surface. And the holder base may include a central portion configured to mount flush with a rear face of the portable computing device, a plurality of arms extending from the central portion at different angles, the plurality of arms also being configured to mount flush with the rear face of the portable computing device, and a curved lip at a distal end of each of the plurality of arms, each curved having a grooved portion configured to hold a distal edge of the portable computing device therein. Those and other objects, advantages, and features of the present invention will become more readily apparent by the following written description, taken in conjunction with the accompanying drawings and claims.

BRIEF DESCRIPTION OF THE DRAWINGS

[0008] Many aspects of the present invention can be better understood with reference to the accompanying drawings, which are part of the specification and represent exemplary embodiments of the present invention. The components in the drawings are not necessarily to scale, emphasis instead being placed upon illustrating the principles of the present invention. And in the drawings, like reference numerals designate corresponding parts throughout the several views.

[0009] FIG. **1**A is an isometric view illustrating a portable computer holder according to a non-limiting embodiment of the present invention;

[0010] FIG. **1**B is a sectional view of the portable computer holder illustrated in FIG. **1**A taken along line B-B;

[0011] FIG. **2**A is an isometric view illustrating the holder base of the portable computer holder illustrated in FIG. **1**A;

[0012] FIG. **2**B is a plan view of the holder base illustrated in FIG. **2**A;

[0013] FIG. **2**C is an elevation view of the holder base illustrated in FIG. **2**A;

[0014] FIG. **3**A is an isometric view illustrating the grip flange of the portable computer holder illustrated in FIG. **1**A;

[0015] FIG. **3**B is an elevation view of the grip flange illustrated in FIG. **3**A;

[0016] FIG. **4**A is an isometric view illustrating an example of one of the ergonomic and secure grip positions a user can enjoy with the portable computer holder of FIG. **1**A;

[0017] FIG. **4**B is an isometric view illustrating an example of another one of the ergonomic and secure grip positions a user can enjoy with the portable computer holder of FIG. **1**A;

[0018] FIG. **5**A is an elevation view taken from the side illustrating the portable computer holder of FIG. **1**A standing partially upright on a flat surface;

[0019] FIG. **5**B is an elevation view taken from the rear illustrating the portable computer holder of FIG. **1**A standing partially upright on a flat surface;

[0020] FIG. **6**A is an isometric view illustrating the cover of the portable computer holder illustrated in FIG. **1**A;

[0021] FIG. **6**B is an elevation view of the cover illustrated in FIG. **6**A;

[0022] FIG. **7**A is an isometric view illustrating a belt clip according to a non-limiting embodiment of the present invention;

[0023] FIG. **7**B is an elevation view of the belt clip illustrated in FIG. **7**A;

[0024] FIG. **7**C is an isometric view illustrating the belt clip of FIG. **7**A installed on the portable computer holder illustrated in FIG. **1**A; and

[0025] FIG. **8** is a plan view of a portable computer holder according to another non-limiting embodiment of the present invention.

DETAILED DESCRIPTION OF THE PREFERRED EMBODIMENTS

[0026] Turning to FIGS. **1**A and **1**B, the portable computer holder **100** of the present invention includes a holder base **102**, a grip flange **104**, and a front cover **106**. A portable computing device **108** is disposed in the holder base **102** so it can be ergonomically and securely gripped, and a front cover **106** is removable attached to the portable computing device **108** to protect the user interface portion at the front face of the portable computing device **108** from contaminants and scratching when not in use. The front cover **106** is removed from the portable computing device **108** when a user is interacting with the portable computing device **108**. The grip flange **104** operates as a counterweight and provides additional grip for a user when holding the holder base **102** and portable computing device **108** in one hand. The flange grip **102** also provides a mechanism for standing the holder base **102** and portable computing device **108** at least partially upright on a work surface. Accordingly, the present invention is suited both for ergonomically and securely holding a portable computing device with one hand and for standing it at least partially upright on a work surface.

[0027] As illustrated in more detail in FIGS. **2**A-**2**C, the holder base **102** includes a central portion **200** from which four arms **202**A-**202**D extend. The central portion **200** provides a substantially flat surface that is configured to mount flush with the rear face of the portable computing device **108**. Accordingly, the central portion **200** is substantially parallel to a plane defined by the rear face of the portable computing device **108**. The four arms **202**A-**202**D extend from the central portion **200** in substantially the same plane as the central portion **200** in directions corresponding to the four corners of the portable computing device **108**.

[0028] At the distal end of each of the form arms **202**A-**202**D is a corresponding curved lip **204**A-**204**D configured to wrap around a respective corner of the portable computing device **108**. The curved lips **204**A-**204**D are positioned at the four corners of the portable computing device **108** to hold the portable computing device **108** securely in lateral directions (i.e., in directions parallel to the plane defined by the rear face of the portable computing device **108**). Each curved lip **204**A-**204**D includes a grooved portion **206**A-**206**D that is formed substantially perpendicular to the central portion **200** of the holder base **102** and, therefore, substantially perpendicular to the plane defined by the rear face of the portable computing device **108**. Each grooved portion **206**A-**206**D is approximately the same width as the thickness of the portable computing device **108** so that the respective corners of the portable computing device **108** can be disposed therein. Part of each grooved portion **206**A-**206**D extends over the front face of the portable computing device **108** to hold the portable computing device **108** securely in the vertical direction (i.e., in the direction perpendicular to the plane defined by the rear face of the portable computing device **108**).

[0029] Preferably, each grooved portion **206**A-**206**D has a width slightly less than the thickness of the portable computing device **108** so as to provide an interference fit between the curved lips **204**A-**204**D and the corners of the portable computing device **108**. The holder base **102** is preferably made from a flexible material, such as a thermoplastic elastomer (e.g., santoprene, Alcryn, Estane, Hytrel, Low-density polyethylene (LDPE), etc.), so that one or more of the four arms **202**A-**202**D and/or curved lips **204**A-**204**D can be manipulated (e.g., bent, folded, rotated, etc.) to allow installation of the portable computing device **108** in the holder base **102** between the curved lips **204**A-**204**D and within the grooved portions **206**A-**206**D of the curved lips **204**A-**204**D. The holder base **102** is also preferably made from a flexible material so the central portion **200** and arms **202**A-**202**D can conform to the shape of the rear face of the portable computing device **108** when the rear face of the portable computing device **108** is not perfectly flat. And the holder base **102** is preferably dimensioned to suit the specific size and shape of a particular portable computing device **108** so as to ensure that particular portable computing device **108** is held as securely as possible at its corners by the four curved lips **204**A-**204**D of the holder base **102**.

[0030] One or more feet **208**A-**208**D are provided on the part of each grooved portion **206**A-**206**D that extends over the front face of the portable computing device **108**. Each of the feet **208**A-**208**D extends substantially perpendicular to the front face of the portable computing device **108** at a peripheral edge of a corresponding curved lip **204**A-**204**D. The feet **208**A-**208**D are configured to extend beyond the front face of the portable computing device **108** to protect the front face when the holder base **102** and portable computing device **108** are placed on a flat surface with the front face of the portable computing device **108** facing toward the flat surface (i.e., a face-down position). And the part of each grooved portion **206**A-**206**D that extends over the front face of the portable computing device **108** only extends over the front face of the portable computing device **108** a sufficient amount to secure it in place while leaving the user interface—in particular, the display—of the portable computing device fully accessible to the user. In that way, the curved lips **204**A-**204**D at the corners of the holder base **102** secure the portable computing device **108** and protect its front face while leaving the user interface portion fully accessible to the user.

[0031] Extending from the central portion **200** of the holder base **102** is a domed structure **210** with which a user can ergonomically and securely grip the holder base **102** and, therefore, the portable computing device **108** when it is installed therein. As illustrated in FIG. **2**B, the domed structure **210** is elliptical in cross section with its major axis and minor axis lying in the same plane as the central portion **200** of the holder base **102**. As illustrated in FIG. **2**C, the domed

structure **210** is in the shape of half an ellipse (e.g., a parabola) in a direction perpendicular to its cross section. And as also illustrated in FIG. **2**B, the domed structure **210** is angled with respect to the rectangular shape of the holder base **102** defined by its four corners at feet **208**A-**208**D. Preferably, the major axis of the elliptical shape of the domed structure **210** is at an angle α of about +45° with respect to the centerline (dotted-dashed line), or axis of symmetry, of the holder base **102**.

[0032] The domed structure **210** is elliptical so that it will easily fit in various hand sizes. For example, users with smaller hands can grip the domed structure **210** around its minor axis so the users' fingers do not need to travel as far from one side of the domed structure to the other and the domed structure will comfortably fill the user's hand. And users with larger hands can grip the domed structure **210** around its major axis so the users' fingers will need to travel far enough from one side of the domed structure **210** to the other that the domed structure **210** comfortably fills the user's hand. By fitting different hands sizes in that way, the elliptical shape of the domed structure **210** helps ensure the user's grip is not only comfortable, but also secure.

[0033] The domed structure **210** is positioned at an angle α so it will more naturally fit in a user's hand when the user is holding the portable computer holder **100** and portable computing device **108** at a position in front of his or her body. Accordingly, that angle α corresponds to the angle of a user's arm when the user holds the holder base **102** and portable computing device **108** centrally in front of his or her body. That angle α naturally occurs as the user's arm extends from a position at the user's side to the position centrally in front of his or her body. And that angle α can be reversed (e.g., switched from +45° to −45°) based on which hand the user will utilize to grasp the holder base **102** and portable computing device **108** as well as whether the user prefers to grip the domed structure **210** along its minor axis or its major axis. Or the domed structure **210** can be provided with a circular cross section so that it will fit a user's hand the same way regardless of the direction from which the user grasps it. And when the domed structure **210** is circular in cross section, it can be formed with different diameters to suit different hand sizes.

[0034] The domed structure **210** includes a plurality of elongated openings **212** extending from the central portion **200** of the holder base **102** toward the pinnacle of the domed structure **210**. A portion of each opening may also extend into the central portion **200** of the holder base **102** in the plane of the holder portion **200**. Each opening **212** is configured to receive one or more of a user's fingers therein to further provide an ergonomic and secure gripping surface. Each opening **212** is preferably rounded toward the pinnacle of the domed structure **210** to fit the contour of a finger.

[0035] At least one of the openings **212** is placed in line with the angle α of the domed structure **210** so a user can insert one of his or her fingers—preferably the thumb—directly into that opening **212** without the need to rotate his or her hand at the wrist (see, e.g., FIG. **4**A). With that opening **212** serving as a starting point, the other openings may be disposed equidistantly from each other around the perimeter of the domed structure **210** in an elliptical array. Preferably, there are four openings **212** spaced 90° apart from each other so that two of the openings **212** are opposite to each other and in line with the angle α of the domed structure **210** and the other two openings are opposite each other and perpendicular to the angle α of the domed structure **210**. That configuration allows a user to insert one of his or her fingers directly into an opening **212** in four different orientations without the need to rotate his or her hand at the wrist—right-side-up and up-side-down with the longer edge of the rectangular shape of the holder base **102** parallel to the ground (i.e., right-side-up and up-side-down in the "landscape" orientation) and right-side-up and up-side-down with the longer edge of the rectangular shape of the holder base **102** perpendicular to the ground (i.e., right-side-up and up-side-down in the "portrait" orientation). Moreover, there will be an opening **212** into which a user can directly insert one of his or her fingers without bending his or her wrist in each of those orientations regardless of which hand the user utilizes to grasp the domed structure **210**.

[0036] Extending from the pinnacle of the domed structure **210** is an attachment mechanism **214** for attaching the grip flange **104** to the holder base **102**. The attachment mechanism **214** extends substantially perpendicular to the central portion **200** of the holder base **102** and includes a flat portion **216** (FIG. **2**B) and a cylindrical tab **218** (FIG. **2**C) configured to engage a corresponding flat portion **308** (FIG. **3**B) and a corresponding cylindrical opening (not shown), respectively, in the grip flange **104**. The attachment mechanism **214** includes a hollow bore **220** (FIG. **2**C) configured to receive a plurality of attachment mechanisms **302** (FIG. **3**B) on the grip flange **104**. A cylindrical lip **222** (FIG. **2**C) is provided on an inner wall of the bore **220** with a smaller diameter than the diameter of the bore **220** to engage hooked tabs **306** (FIG. **3**B) on the attachment mechanisms **302** (FIG. **3**B) of the grip flange **104**, as illustrated in FIG. **1**B. The flat portion **216** and the cylindrical tab **218** operate to prevent the grip flange **104** from rotating on the attachment mechanism **214** when it is attached to the holder base **102**, and the cylindrical lip **222** holds the grip flange **104** securely attached to the attachment mechanism **214**.

[0037] As illustrated in FIG. **3**A, the grip flange **104** includes a substantially flat flange base **300**. The flange base **300** includes a plurality of flat surfaces **304** at its peripheral edges that are configured to be substantially parallel with the edges of the rectangular shape of the holder base **102** defined by its four corners at feet **208**A-**208**D. Because those flat surfaces **304** are substantially parallel with the edges of the rectangular shape of the holder base **102**, they will also be parallel with the edges of a portable computing device **108** being held in the portable computer holder **100**. Those flat surfaces **304** will therefore provide additional stability when standing the portable computer holder **100** and portable computing device **108** at least partially upright on a work surface (see, e.g., FIGS. **5**A and **5**B). Moreover, those flat surfaces will support the portable computer holder **100** and portable computing device **108** in an orientation suitable for interacting with the user interface of the portable computing device **108** (i.e., with the display of the user interface in the landscape or portrait orientation and at a good angle from which the user can view the display). In a like manner, if the portable computing device **108** is some shape other than rectangular, the flat surfaces **304** can be placed in different locations on the grip flange **104** to ensure that the user interface of the portable computing device **108** is in a suitable orientation when standing it at least partially upright on a work surface.

[0038] As illustrated in FIG. **3**B, the grip flange **104** also includes a plurality of attachment mechanisms **302** extending substantially perpendicular from the flange base **300** at a central location of the flange base **300**. The plurality of attachment mechanisms **302** are configured to mate with the attachment mechanism **214** on the domed structure **200** of the

holder base **102**. Each of those attachment mechanisms **304** includes a hooked tab **306** configured to engage the cylindrical lip **222** (FIG. **2**C) in the bore **220** of the attachment mechanism **214** on the domed structure **210**. And one of those attachment mechanisms **300** includes a flat portion **308** configured to engage the flat portion **216** (FIG. **2**B) of the attachment mechanism **214** on the domed structure **200**.

[0039] The grip flange **104** also includes a cylindrical opening (not shown) on the same side of the flange base **300** as the attachment mechanisms **302**. The cylindrical opening is configured to receive the cylindrical tab **218** (FIG. **2**C) of the attachment mechanism **214** on the domed structure **200** when the grip flange **104** is attached to the holder base **102**. As discussed above, the cylindrical opening and flat portion **308** on the grip flange **104** operate to prevent the grip flange **104** from rotating on the attachment mechanism **214** when it is attached to the holder base **102**, and the hooked tab **306** holds the grip flange **104** securely attached to the attachment mechanism **214**. Other mechanisms are also envisioned for attaching the grip flange **104** to the holder base **102** without departing from the spirit and scope of the invention, such as threaded engagement, sonic welding, gluing, and forms of snapped engagement other than that described above. In the alternative, the grip flange **104** can be formed integrally with the holder base **102** from a single piece of material. Regardless of whether the holder base **102** and grip flange **104** are formed as a separate pieces or formed integrally from a single piece of materially, they are preferably formed from the same material formed by injection modling.

[0040] The unique configuration of the domed structure **210** and grip flange **104** of the portable computer holder **100** provide multiple grip positions that can be used to ergonomically and securely hold a portable computing device **108** with only one hand, thereby freeing up the other hand to interact with the user interface of the portable computing device **108**. As illustrated in FIG. **4**A, for example, a user can place his or her thumb through the opening **212** that is in line with the angle α of the domed structure **210** while wrapping his or her other fingers and palm around the outside of the domed structure **210** and grip flange **104** so that the flange base **300** of the grip flange **104** is disposed between two of the user's adjacent fingers—preferably between the user's index finger (digitus secundus manus) and middle finger (digitus tertius). Or as illustrated in FIG. **4**B, a user can wrap his or her palm and fingers around the domed structure **210** with his or her thumb facing outward away from the domed structure and the attaching mechanisms **214** and **302** of the grip flange **104** and the domed structure **210** disposed between two of the user's adjacent fingers—preferably between the user's middle finger (digitus tertius) and ring finger (digitus annuláris).

[0041] In the grip position illustrated in FIG. **4**A, the user's palm is substantially perpendicular to the central portion **200** of the holder base **102** and, therefore, substantially perpendicular to the plane defined by the rear face of the portable computing device **108**. And because the flange base **300** of the base portion **104** is disposed between the user's fingers in that grip position, the flange base of the base portion **104** will provide additional leverage for controlling the pitch (i.e., the viewing angle) of the portable computing device **108** with the portable computer holder **100**. Also in that grip position, the user's wrist is neutral to 5° and the weight of the portable computer holder **100** and portable computing device **108** are supported by the larger, stronger muscles in the user's hand and wrist. Accordingly, that grip position is five times more efficient (i.e., it consumes less of the user's energy) than holding the portable computing device **108** by wrapping the fingers of one hand around the peripheral edge of the portable computing device **108**.

[0042] In the grip position illustrated in FIG. **4**B, the user's fingers are spread across the central portion **200** of the holder base **102** and the rear face of the portable computing device **108**. By spreading the user's fingers across the central portion **200** of the holder base **102** and the rear face of the portable computing device **108**, a broader and more stable base is provided for holding the portable computer holder **100** and portable computing device **108**. And because the user's hand is disposed between the central portion **200** of the holder base **102** and the flange base **300** of the grip flange **104** in that grip position, the portable computer holder **100** is held securely to the user's hand by the grip flange **104**. Also in that position, the portable computer holder **100** and portable computing device **108** are supported by the larger, stronger muscles in the user's arm and elbow. And like the grip position illustrated in FIG. **4**A, the grip position illustrated in FIG. **4**B is significantly more efficient than holding the portable computing device **108** by wrapping the fingers of one hand around the peripheral edge of the portable computing device **108**. Various other grip positions are also possible that provide similar advantages.

[0043] In addition to providing extra leverage and a more secure grip, the grip flange **104** operates as a counterweight to help balance the portable computer holder **100** and portable computing device **108** in a user's hand. The grip flange **104** also allows the portable computer holder **100** and portable computing device **108** to be stood at least partially upright on a flat surface, similar to the easel on a picture frame. Accordingly, as illustrated in FIGS. **5**A and **5**B, the grip flange **104** is configured to extend from the domed structure **210** of the holder base **102** a sufficient distance D to support the portable computer holder **100** at a desirable angle for viewing and interacting with the user interface of the portable computing device **108**. And as discussed above, the flat surfaces **304** at the peripheral edges of the flange base **300** provide additional stability for supporting the portable computer holder **100** and portable computing device **108** with the display of the user interface in the landscape or portrait orientation and at a good angle from which the user can view the display.

[0044] By requiring the user to use less energy to grip the portable computing device **108**, the portable computer holder **100** of the present invention allows a user to grip the portable computing device **108** more comfortably for longer periods of time. Accordingly, the portable computer holder **100** of the present invention reduces the likelihood of injuries to a user's fingers and/or wrist due to prolonged use of a portable computing device **108**. The likelihood of injury is further reduced by the portable computer holder **100** of the present invention because the different grip positions allow a user to utilize different muscles to support and stabilize the portable computer holder **100** and portable computing device **108**. Thus, a user can switch between many different grip positions if one of those grip positions becomes tiresome and/or uncomfortable. Moreover, by providing a stable and secure grip for holding the portable computing device **108**, the portable computer holder **100** of the present invention also greatly reduces the likelihood of dropping and damaging often-expensive portable computer devices **108**.

[0045] As illustrated in FIGS. **6**A and **6**B, the cover **106** for the portable computer holder **100** includes a substantially flat

main body **600** that is configured to mount flush with and cover the front face of the portable computing device **108**. Accordingly, the main body is substantially parallel to a plane defined by the front face of the portable computing device **108** and is substantially the same shape as the front face of the portable computing device **108**, except where the curved lips **204**A-**204**D at the corners of the holder base **102** extend over the front face of the portable computing device **108**. The main body includes cutout portions **602**A-**602**D at each of its four corners that are configured to receive the curved lips **204**A-**204**D at the corners of the holder base **102** when both the holder base **102** and the cover **106** are installed on the portable computing device **108**. Accordingly, the entire front face of the portable computing device **108** will be covered when the portable computing device **108** is installed between the holder base **102** and the cover **106**.

[0046] The main body **600** of the cover **106** also includes a plurality of curved lips **604** extending substantially perpendicular to the plane in which the main body **600** lies and, therefore, substantially perpendicular to the plane defined by the front face of the portable computing device **108**. Each curved lip **604** includes a grooved portion **606** that is formed substantially perpendicular to the main body **600** Like the grooved portions **206**A-**206**D in the curved lips **204**A-**204**D of the holder base **102**, each grooved portion **606** in the curved lips **604** of the cover **106** is approximately the same width as the thickness of the portable computing device **108** so that the sides of the portable computing device **108** can be disposed therein. Part of each grooved portion **606** extends over the rear face of the portable computing device **108** so it is held securely to the portable computing device **108** in the vertical direction (i.e., in the direction perpendicular to the plane defined by the front face of the portable computing device **108**).

[0047] Also like the grooved portions **206**A-**206**D in the curved lips **204**A-**204**D of the holder base **102**, each grooved portion **606** in the curved lips **604** of the cover **106** preferably has a width slightly less than the thickness of the portable computing device **108** so as to provide an interference fit between the curved lips **604** and the sides of the portable computing device **108**. Accordingly, the cover **106** is preferably made from a somewhat flexible material so the curved lips **604** can be manipulated (e.g., bent, folded, deflected, etc.) around the portable computing device **108** to allow installation of the cover **106** on the portable computing device **108**. That material, however, is preferably more rigid than the holder base **102** and grip flange **104**, such as an ABS thermoplastic material, as to provide better protective qualities. And when that material is solid and opaque in the region of user interface, the cover **106** will need to be removed for a user to interact with the user interface of the portable computing device **108**. In the alternative, the cover **108** can be modified to include a transparent material in the region of user interface that is more flexible than the remaining portions of the cover and/or that is electrically conductive so the user can interact with the user interface of the portable computing device **108** with the cover **106** installed thereon.

[0048] In addition to the components described above, the portable computer holder **100** of the present invention may include various other components to facilitate holding a portable computing device **108** in different manners. For example, the grip flange **104** may be removably attached to the holder base **102** so it can be replaced with various other attachment mechanisms, such as a ¼"-20 thread receptacle for mounting to a standard tripod. Or the attachment mechanism **214** on the holder base **102** can be configured so that it can be directly mounted to another device when the grip flange **104** is removed, such as by forming that attachment mechanism with a ¼"-20 thread receptacle for mounting to a standard tripod. Or other attachment mechanisms can be formed on or attached to the grip flange **104** so the grip flange **104** does not need to be removed, thereby reducing the number of parts of which a user needs to keep track.

[0049] As FIGS. **7**A-**7**C illustrate, a belt clip **700** can be attached directly to the grip flange **104** so a user can attach the portable computer holder to his or her belt. The belt clip **700** includes a rectangular upper portion **702** configured to attach to the user's belt and a rectangular lower portion **704** configured to attach to the grip flange **104**. The upper portion **702** includes a groove **706** formed in a rear side thereof that is dimensioned to receive the user's belt therein. And the lower portion **704** includes a groove **708** formed in a front side thereof that is dimensioned to receive the grip base **300** of grip flange **104** therein. The groove **706** of the upper portion **702** is disposed on the opposite side of the belt clip **700** from the groove **708** of the lower portion **704** such that the portable computer holder **100** and, therefore, the front face of the portable computing device **108**, will face away from the user when attached to the user's belt.

[0050] The upper portion **702** and lower portion **704** of the belt clip **700** include a plurality of openings **710** extending therethrough to reduce the weight and enhance the aesthetics of the belt clip. The lower portion **704** of the belt clip **700** further includes locking features (not shown) for keeping the grip flange **104** attached to the belt clip. Any suitable locking features can be used to provide that functionality. Other mechanisms for attaching the portable computer holder **100** to a user, such as a lanyard, may also be attached to the grip flange **104** or other part of the portable computer holder **100** in a similar manner.

[0051] Although certain presently preferred embodiments of the disclosed invention have been specifically described herein, it will be apparent to those skilled in the art to which the invention pertains that variations and modifications of the various embodiments shown and described herein may be made without departing from the spirit and scope of the invention. For example, the domed structure **210** may be offset from the centerline of the holder base **102**, as illustrated in FIG. **8**, so that more of a user's forearm can be used to support the weight of the portable computer holder **100** and portable computing device **108**. Accordingly, it is intended that the invention be limited only to the extent required by the appended claims and the applicable rules of law.

What is claimed is:

1. A portable computer holder comprising:

a holder base with a front face and a rear face opposite the front face, the holder base being configured to hold a portable computing device at its front face by engaging distal edges of the portable computing device;

a dome-shaped grip extending from the rear face of the holder base, the dome-shaped grip having at least one opening for receiving a user's finger; and

a flange extending from the dome-shaped grip for supporting the holder base at an angle on a flat surface.

2. The portable computer holder of claim **1**, wherein the holder base includes:

a central portion configured to mount flush with a rear face of the portable computing device;

a plurality of arms extending from the central portion at different angles, the plurality of arms also being configured to mount flush with the rear face of the portable computing device; and

a curved lip at a distal end of each of the plurality of arms, each curved having a grooved portion configured to hold a distal edge of the portable computing device therein.

3. The portable computer holder of claim **2**, further comprising one or more feet extending from each curved lip a distance beyond a front face of the portable computing device.

4. The portable computer holder of claim **2**, wherein the dome-shaped grip is elliptical in cross section and is disposed on the central portion of the holder base.

5. The portable computer holder of claim **4**, wherein the dome-shaped grip is disposed at an angle with respect to an axis of symmetry of the holder base.

6. The portable computer holder of claim **5**, wherein the at least one opening is in line with the angle.

7. The portable computer holder of claim **6**, wherein the dome-shaped grip includes four openings in an array with each opening being separated from each other opening by ninety degrees.

8. The portable computer holder of claim **2**, wherein the flange includes a flat base portion formed substantially parallel to the central portion of the holder base.

9. The portable computer holder of claim **8**, wherein the flat base portion includes one or more flat peripheral edge.

10. The portable computer holder of claim **8**, wherein the flat base portion includes an attachment mechanism for attaching the portable computer holder to at least one of a tripod, a user's belt, and a lanyard.

11. The portable computer holder of claim **2**, further comprising a cover configured to cover a front face of the portable computing device, the cover having a main body that is substantially the same shape as the front face of the portable computing device except for a cutout where each curved lip holds a distal edge of the portable computing device.

12. The portable computer holder of claim **2**, wherein at least the central portion and the plurality of arms are formed of a flexible material so they conform to the shape of a rear face of the portable computing device.

13. The portable computer holder of claim **1**, wherein the holder base, dome-shaped grip, and flange are integrally formed from a single piece of material.

14. The portable computer holder of claim **1**, wherein the dome-shaped grip is offset from a centerline of the holder base so that more of a user's forearm will support the portable computer holder.

15. A method for holding a portable computing device, the method comprising:

forming a holder base with a front face and a rear face opposite the front face, the holder base being configured to hold a portable computing device at its front face by engaging distal edges of the portable computing device;

forming a dome-shaped grip extending from the rear face of the holder base, the dome shaped grip having at least one opening for receiving a user's finger; and

forming a flange extending from the dome-shaped grip for supporting the holder base at an angle on a flat surface.

16. The portable computer holder of claim **15**, wherein the step of forming the holder base includes:

forming a central portion configured to mount flush with a rear face of the portable computing device;

forming a plurality of arms extending from the central portion at different angles, the plurality of arms also being configured to mount flush with the rear face of the portable computing device; and

forming a curved lip at a distal end of each of the plurality of arms, each curved lip being formed with a grooved portion configured to hold a distal edge of the portable computing device therein.

17. The portable computer holder of claim **16**, further comprising the step of forming one or more feet extending from each curved lip a distance beyond a front face of the portable computing device.

18. The portable computer holder of claim **16**, wherein the step of forming the dome-shaped grip includes forming the dome-shaped grip with an elliptical cross section on the central portion of the holder base.

19. The portable computer holder of claim **18**, wherein the dome-shaped grip is disposed at an angle with respect to an axis of symmetry of the holder base.

20. The portable computer holder of claim **19**, wherein the at least one opening is in line with the angle.

21. The portable computer holder of claim **20**, wherein the dome-shaped grip includes four openings in an array with each opening being separated from each other opening by ninety degrees.

22. The portable computer holder of claim **16**, wherein the step of forming the flange includes forming the flange with a flat base portion substantially parallel to the central portion of the holder base.

23. The portable computer holder of claim **22**, wherein the flat base portion includes one or more flat peripheral edge.

24. The portable computer holder of claim **22**, wherein the flat base portion includes an attachment mechanism for attaching the portable computer holder to at least one of a tripod, a user's belt, and a lanyard.

25. The portable computer holder of claim **16**, further comprising the step of forming a cover configured to cover a front face of the portable computing device, the cover having a main body that is substantially the same shape as the front face of the portable computing device except for a cutout where each curved lip holds a distal edge of the portable computing device.

26. The portable computer holder of claim **16**, wherein at least the central portion and the plurality of arms are formed of a flexible material so they conform to the shape of a rear face of the portable computing device.

27. The portable computer holder of claim **15**, wherein the holder base, dome-shaped grip, and flange are integrally formed from a single piece of material.

28. The portable computer holder of claim **15**, wherein the step of forming the dome-shaped grip includes forming the dome-shaped grip offset from a centerline of the holder base so that more of a user's forearm will support the portable computer holder.

* * * * *