US010207460B2

(12) **United States Patent**
Reznar

(10) **Patent No.: US 10,207,460 B2**
(45) **Date of Patent: Feb. 19, 2019**

(54) **METHOD OF MAKING HINGED FASTENERS BY THREE-DIMENSIONAL PRINTING**

(71) Applicant: **A. Raymond et Cie**, Grenoble (FR)

(72) Inventor: **Jason F. Reznar**, Redford, MI (US)

(73) Assignee: **A. Raymond et Cie**, Grenoble (FR)

(*) Notice: Subject to any disclaimer, the term of this patent is extended or adjusted under 35 U.S.C. 154(b) by 136 days.

(21) Appl. No.: **15/358,833**

(22) Filed: **Nov. 22, 2016**

(65) **Prior Publication Data**

US 2017/0072634 A1 Mar. 16, 2017

Related U.S. Application Data

(60) Division of application No. 14/092,101, filed on Nov. 27, 2013, now Pat. No. 9,511,544, which is a (Continued)

(51) **Int. Cl.**
B29D 1/00 (2006.01)
B29C 67/00 (2017.01)
(Continued)

(52) **U.S. Cl.**
CPC ***B29C 67/0059*** (2013.01); ***B22F 3/1055*** (2013.01); ***B22F 5/06*** (2013.01);
(Continued)

(58) **Field of Classification Search**
CPC B22F 3/1055; B28B 1/001; B29C 64/106; B29C 64/112; B29C 64/118; B29C 64/124; B29C 64/129; B29C 64/135; B29C 64/141; B29C 64/147; B29C 64/153; B29C 64/171; B29C 64/176; B29C 64/182; B29D 1/00; F16B 2001/0007
USPC 264/297.1, 297.8, 308, 401, 460, 461, 264/462, 463, 494, 496, 497; 219/121.64, 219/121.66, 121.85
See application file for complete search history.

(56) **References Cited**

U.S. PATENT DOCUMENTS

3,076,208 A 2/1963 Moore
3,466,966 A 9/1969 Brown
(Continued)

FOREIGN PATENT DOCUMENTS

DE 102006062373 A1 6/2008
EP 0490546 A1 6/1992
(Continued)

OTHER PUBLICATIONS

M. Bonomo, Diamond Fasteners, Diamond Fasteners Blog; "Can 3-D Printing Be Used for NAS Screws?;" http://www.diamondfasteners.com/blog/bid/326572/Can-3-D-Printing-Be-Used-for-NAS . . . (published Nov. 27, 2013); 2 pages.
(Continued)

Primary Examiner — Leo B Tentoni
(74) *Attorney, Agent, or Firm* — Harness, Dickey & Pierce, PLC

(57) **ABSTRACT**

A fastener is provided. In another aspect, a fastener is made of layers of material, a light curable material and/or multiple built-up materials. Another aspect uses a three-dimensional printing machine to emit material from an ink jet printing head to build up a fastener.

70 Claims, 24 Drawing Sheets

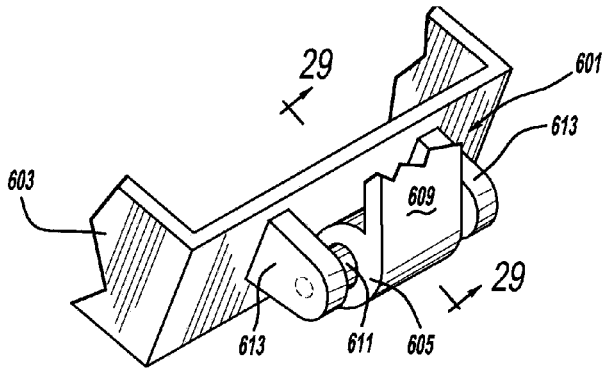

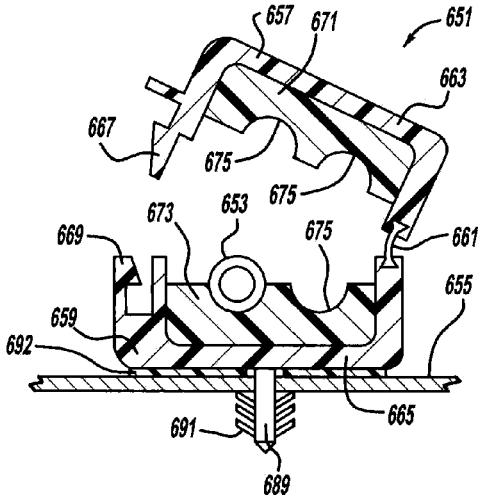

Related U.S. Application Data

continuation of application No. PCT/US2012/039445, filed on May 24, 2012.

(60) Provisional application No. 61/492,503, filed on Jun. 2, 2011.

(51) **Int. Cl.**

B33Y 80/00	(2015.01)
B33Y 10/00	(2015.01)
B33Y 70/00	(2015.01)
B29C 64/124	(2017.01)
B29C 64/118	(2017.01)
B29C 64/182	(2017.01)
B29C 64/147	(2017.01)
B29C 64/176	(2017.01)
B29C 64/153	(2017.01)
B28B 1/00	(2006.01)
B29C 64/171	(2017.01)
B29C 64/135	(2017.01)
B29C 64/141	(2017.01)
F16B 5/02	(2006.01)
F16B 5/06	(2006.01)
F16B 7/04	(2006.01)
F16B 19/10	(2006.01)
F16B 29/00	(2006.01)
F16B 33/00	(2006.01)
H02G 3/32	(2006.01)
F16B 19/00	(2006.01)
F16B 37/00	(2006.01)
B33Y 50/02	(2015.01)
B22F 3/105	(2006.01)
B22F 5/06	(2006.01)
B29C 35/08	(2006.01)
B29C 64/00	(2017.01)
B29C 64/106	(2017.01)
B29C 64/112	(2017.01)
B29C 64/129	(2017.01)
B29C 64/386	(2017.01)
B29C 64/40	(2017.01)
F16B 1/00	(2006.01)
B29L 31/00	(2006.01)
F16B 37/04	(2006.01)
F16B 37/08	(2006.01)
F16B 39/30	(2006.01)
B29L 1/00	(2006.01)
B29K 105/00	(2006.01)

(52) **U.S. Cl.**

CPC ***B28B 1/001*** (2013.01); ***B29C 35/0805*** (2013.01); ***B29C 64/00*** (2017.08); ***B29C 64/106*** (2017.08); ***B29C 64/112*** (2017.08); ***B29C 64/118*** (2017.08); ***B29C 64/124*** (2017.08); ***B29C 64/129*** (2017.08); ***B29C 64/135*** (2017.08); ***B29C 64/141*** (2017.08); ***B29C 64/147*** (2017.08); ***B29C 64/153*** (2017.08); ***B29C 64/171*** (2017.08); ***B29C 64/176*** (2017.08); ***B29C 64/182*** (2017.08); ***B29C 64/386*** (2017.08); ***B29C 64/40*** (2017.08); ***B33Y 10/00*** (2014.12); ***B33Y 50/02*** (2014.12); ***B33Y 70/00*** (2014.12); ***B33Y 80/00*** (2014.12); ***F16B 5/0233*** (2013.01); ***F16B 5/065*** (2013.01); ***F16B 5/0635*** (2013.01); ***F16B 5/0642*** (2013.01); ***F16B 7/0493*** (2013.01); ***F16B 19/002*** (2013.01); ***F16B 19/1081*** (2013.01); ***F16B 29/00*** (2013.01); ***F16B 33/006*** (2013.01); ***F16B 37/00*** (2013.01); ***H02G 3/32*** (2013.01); *B22F 2003/1057* (2013.01); *B29C 2035/0827* (2013.01); *B29K 2105/0002* (2013.01); *B29L 2001/005* (2013.01); *B29L 2031/727* (2013.01); *F16B 37/041* (2013.01); *F16B 37/0842* (2013.01); *F16B 39/30* (2013.01); *F16B 2001/0007* (2013.01)

(56) **References Cited**

U.S. PATENT DOCUMENTS

4,125,917	A	11/1978	Andre
4,261,243	A	4/1981	Palmer
4,296,949	A	10/1981	Muetterties et al.
4,334,814	A	6/1982	McKewan
4,358,080	A	11/1982	Wolker
4,402,118	A	9/1983	Benedetti
4,403,895	A	9/1983	Caldwell et al.
4,408,939	A	10/1983	Graff et al.
4,508,477	A	4/1985	Oehlke et al.
4,575,330	A	3/1986	Hull
4,614,321	A	9/1986	Andre
4,770,582	A	9/1988	Junemann et al.
4,900,210	A	2/1990	Buchanan et al.
5,098,242	A	3/1992	Schaty
5,102,276	A	4/1992	Gourd
5,106,324	A	4/1992	Natsume
5,143,817	A	9/1992	Lawton et al.
5,168,604	A	12/1992	Boville
5,217,337	A	6/1993	Junemann et al.
5,256,018	A	10/1993	Rattmann et al.
5,273,383	A	12/1993	Hughes
5,306,098	A	4/1994	Lewis
5,316,245	A	5/1994	Ruckwardt
5,324,151	A	6/1994	Szudarek et al.
5,328,752	A	7/1994	Miyazato
5,337,983	A	8/1994	Mailey
5,401,905	A	3/1995	Lesser et al.
5,468,108	A	11/1995	Sullivan et al.
5,503,785	A	4/1996	Crump et al.
5,505,411	A	4/1996	Heaton et al.
5,599,149	A	2/1997	Clemente
5,617,911	A	4/1997	Sterett et al.
5,647,931	A	7/1997	Retallick et al.
5,655,927	A	8/1997	Maue et al.
5,658,412	A	8/1997	Retallick et al.
5,718,025	A	2/1998	Courtin
5,829,937	A	11/1998	Morello et al.
5,837,172	A	11/1998	Pritchard et al.
5,866,058	A	2/1999	Batchelder et al.
5,905,231	A	5/1999	Houte et al.
5,906,465	A	5/1999	Sato et al.
5,921,510	A	7/1999	Benoit et al.
5,941,740	A	8/1999	Neuer et al.
5,971,688	A	10/1999	Anstett
5,980,230	A	11/1999	Dowd et al.
6,102,639	A	8/2000	DiStasio
6,116,832	A	9/2000	Wolf et al.
6,259,962	B1	7/2001	Gothait
6,274,813	B1	8/2001	Houte et al.
6,315,510	B1	11/2001	Sturies et al.
6,336,779	B1	1/2002	Jakob et al.
6,338,602	B1	1/2002	Gombert
6,467,650	B1	10/2002	Lesser et al.
6,514,024	B2	2/2003	Akema et al.
6,536,807	B1	3/2003	Raymond et al.
6,565,049	B2	5/2003	Hahn
6,569,373	B2	5/2003	Napadensky
6,585,196	B2	7/2003	Nakanishi
6,616,216	B2	9/2003	Furuyama et al.
6,644,763	B1	11/2003	Gothait
6,644,902	B1	11/2003	Cutshall
6,658,314	B1	12/2003	Gothait
6,669,150	B2	12/2003	Benoit et al.
6,726,417	B2	4/2004	Kanie
6,758,645	B2	7/2004	Curley, Jr. et al.

(56) **References Cited**

U.S. PATENT DOCUMENTS

6,809,257	B2	10/2004	Shibuya
6,850,334	B1	2/2005	Gothait
6,896,839	B2	5/2005	Kubo et al.
6,976,292	B2	12/2005	MacPherson et al.
7,021,875	B2	4/2006	Yake et al.
7,036,775	B2	5/2006	Nakanishi
7,048,486	B2	5/2006	Schaty
7,073,230	B2	7/2006	Boville
7,086,630	B2	8/2006	Maruyama
7,114,221	B2	10/2006	Gibbons et al.
7,125,512	B2	10/2006	Crump et al.
7,172,161	B2	2/2007	Rosemann et al.
7,179,038	B2	2/2007	Reindl
7,182,563	B2	2/2007	Wimmer et al.
7,183,335	B2	2/2007	Napadensky
7,188,393	B2	3/2007	Kawai
7,192,231	B2	3/2007	Blackaby
7,207,759	B2	4/2007	Kato
7,220,380	B2	5/2007	Farr et al.
7,225,045	B2	5/2007	Gothait et al.
7,226,260	B2	6/2007	Jackson, Jr. et al.
7,255,521	B2	8/2007	Yake et al.
7,255,821	B2	8/2007	Priedeman, Jr. et al.
7,278,190	B2	10/2007	Fischer et al.
7,300,619	B2	11/2007	Napadensky et al.
7,316,374	B2	1/2008	Maruyama
7,341,282	B2	3/2008	Moretti et al.
7,364,686	B2	4/2008	Kritchman et al.
7,369,915	B2	5/2008	Kritchman et al.
7,465,135	B2	12/2008	Fritsch
7,479,510	B2	1/2009	Napadensky et al.
7,481,474	B2	1/2009	Higgins et al.
7,481,647	B2 *	1/2009	Sambu ..... B29C 64/135 264/401 X
7,500,846	B2	3/2009	Eshed et al.
7,503,528	B2	3/2009	Adams et al.
7,506,897	B2	3/2009	Bauer
7,533,852	B2	5/2009	Stigler
7,537,247	B2	5/2009	Trede et al.
7,562,420	B2	7/2009	Kato
7,593,214	B2	9/2009	Lee
7,594,985	B2	9/2009	Yake et al.
7,604,768	B2	10/2009	Kritchman
7,614,589	B2	11/2009	Kato
7,614,590	B2	11/2009	Boville
7,628,857	B2	12/2009	Kritchman et al.
7,658,976	B2	2/2010	Kritchman
7,669,807	B2	3/2010	Stigler et al.
7,685,694	B2	3/2010	Zagagi et al.
7,686,605	B2	3/2010	Perret et al.
7,690,876	B2	4/2010	Kawai et al.
7,713,048	B2	5/2010	Perret et al.
7,725,209	B2	5/2010	Menchik et al.
7,736,578	B2	6/2010	Ederer
7,740,683	B2	6/2010	Thorsson et al.
7,747,341	B2	6/2010	Dubois et al.
7,753,320	B2	7/2010	Geiger et al.
7,767,130	B2	8/2010	Elsner et al.
7,770,266	B2	8/2010	Higgins et al.
7,770,938	B2	8/2010	Bauer
7,829,000	B2	11/2010	Farr et al.
7,837,248	B2	11/2010	Nedelman
7,851,122	B2	12/2010	Napadensky
7,887,012	B2	2/2011	Desai et al.
7,891,095	B2	2/2011	Jonsson et al.
7,891,926	B2	2/2011	Jackson, Jr.
2002/0171177	A1	11/2002	Kritchman et al.
2003/0151167	A1	8/2003	Kritchman et al.
2003/0180117	A1	9/2003	Niku
2004/0067122	A1	4/2004	Post
2004/0081530	A1	4/2004	Lee
2004/0228700	A1	11/2004	Clinch et al.
2005/0072113	A1	4/2005	Collins et al.
2005/0095085	A1	5/2005	Winker
2005/0098688	A1	5/2005	Miarka et al.
2006/0176350	A1	8/2006	Howarth et al.
2008/0052878	A1	3/2008	Lewis et al.
2008/0211132	A1	9/2008	Feenstra
2008/0237933	A1	10/2008	Hochsmann et al.
2008/0282527	A1	11/2008	Beck et al.
2009/0017219	A1	1/2009	Paasche et al.
2009/0045553	A1	2/2009	Weidinger et al.
2009/0129885	A1 *	5/2009	Csik F16B 37/046 411/103
2009/0133228	A1	5/2009	Werner et al.
2009/0142619	A1	6/2009	Miyoshi
2009/0190993	A1	7/2009	De Gelis
2009/0191025	A1	7/2009	Jackson, Jr.
2009/0263180	A1	10/2009	De Gelis
2009/0304952	A1	12/2009	Kritchman
2010/0009133	A1	1/2010	Chait
2010/0098515	A1	4/2010	Raymond
2010/0140430	A1	6/2010	Stigler et al.
2010/0146747	A1	6/2010	Reznar et al.
2010/0217429	A1	8/2010	Kritchman et al.
2010/0270713	A1	10/2010	Frangov et al.
2010/0294549	A1	11/2010	Laville et al.
2011/0033260	A1	2/2011	Miura
2011/0044782	A1	2/2011	Lange et al.
2011/0074065	A1	3/2011	Batchelder et al.
2011/0076495	A1	3/2011	Batchelder et al.
2011/0076496	A1	3/2011	Batchelder et al.
2011/0285052	A1	11/2011	Wigand et al.
2012/0033002	A1	2/2012	Seeler et al.
2012/0225408	A1	9/2012	Moore
2013/0031753	A1	2/2013	Massoels

FOREIGN PATENT DOCUMENTS

EP	2156942	A1	2/2010
FR	2935031	A1	2/2010
GB	1208543	A	10/1970
GB	1440062	A	6/1976
JP	H10119136	A	5/1998

OTHER PUBLICATIONS

Internet Catalog Class Listing for Class Threaded Fastener Selection 215; "What is the definition of carriage bolt?;" Tooling University-SME; (published 2013); 4 pages.

"Make Your Ideas Real-Give Your Creativity a New Dimension, dimension 3D Printers," Stratasys; company brochure; (2010) 73 pages, Stratasys Document #204400-0002.

Brain, Marshall. "How Stereolithography 3-D Layering Works," HowStuffWorks.com.; http://www.howstuffworks.com/stereolith.htm; article, Oct. 5, 2000, 6 pages.

"Stereolithography," Wikipedia, http://en.wikipedia.org/wiki/Stereolithography; article, last modified Jun. 1, 2011, 5 pages.

"3D Printing," Wikipedia, http://en/wikipedia.org/wiki/3D_printing; article, last modified Jun. 20, 2011, 5 pages.

"Connex500, The First Multi-Material 3-Dimensional Printing System", Objet Geometries Ltd.; article, (2010), 2 pages.

"PolyJet Matrix ™ Technology," Objet Geometries Ltd.; brochure, (2009), 6 pages.

"Automotive," Objet Geometries, Inc.; article, http://www.objet.com/INDUSTRIES/Automotive; Sep. 12, 2010, 1 page.

"Keeping AP Racing on Track," Objet Geometries Ltd.; printout, www.2objet.com, (2007), 2 pages.

"The Power of Two, Case Study," Objet Geometries Ltd.; printout, www.objet.com, (2010), 2 pages.

"A Factory on Your Desk,"; The Economist Technology Quarterly; article, Sep. 5, 2009, pp. 26-29.

Rao. M.; Webcourse publication IIT-Delhi/Computer Aided Design & Manufacturing II—Module G(4): Rapid Prototyping (Apr. 18, 2011).

"Consumer Goods", Case Study, Objet Geometries Ltd., printout, May 5, 2011, http://objet.com/INDUSTRIES/consumer_Goods/.

"EOS in brief; e-Manufacturing Solutions", EOS Worldwide, brochure (2010).

(56) **References Cited**

OTHER PUBLICATIONS

Direct metal laster sintering, Wikipedia, http://en.wikipedia.org/wiki/Direct_metal_laser_sintering, article, last modified Mar. 23, 2011, 3 pages.
Sprovieri, John, "Fastening: Christmas Trees Ain't Just for December", Assembly Magazine, downloaded from Internet on Aug. 5, 2011, http://www.assemblymag.com/Articles/Article_Rotation/BNP_GUID_9-5-2006_A_100000.
EOSINT S 750 product brochure, "Double laser-sintering system for the direct, tool-less production of sand cores and moulds for metal castings" downloaded from internet Apr. 1, 2011, http://img.directindustry.com/pdf/repository_di/5078/eosint-s-750-21926_1b.jpg.
EOS e-Manufacturing Solutions, brochure, EOS GmbH Electro Optical Systems, downloaded from internet Apr. 1, 2011, www.eos.info.
"Laser sintering—versatile production of tooling inserts, prototype parts and end products from metal powder", International Powder Metallurgy Directory,http://www.ipmd.net/articles/articles/001087.html, downloaded Apr. 1, 2011.
EOSINT M 280: "Laser-sintering system for the production of tooling inserts, prototype parts and end products directly in metal." Product brochure, EOS e-Manufacturing Solutions, downloaded from internet Apr. 1, 2011, http://www.eos.info/en/products/systems-equipment/metal-laser-sintering-systems.html.
"Digitalized e-Manufacturing workflows: Direct Metall Laser-Sintering technology enables high quality parts, cost efficiency and time savings", press release Mar. 22, 2011, EOS Electro Optical Systems Gmbh, downloaded from internet Apr. 1, 2011, http://www.eos.info/en/news-events/press-relesases/pressdetails/article/103/digitalisier.html.
"Objet, The Power to Create. Jaguar Land Rover", 3Dprinting & Rapid Prototyping by Objet Geometries Ltd.; printout, <http://www.objet.com>/, May 31, 2011.
"Installation Instructions for Towel Bar", Danze (sold in U.S. prior to Jun. 2011).
"Hillman Fasteners 10 Pack #8 Zinc EZ Anchor 41408", downloaded from internet May 19, 2011: <http://www.thegreathardwarestore.com/Hillman-Fasteners-10-Pack-8-Zinc-EZ-Anchor-41408-p/848187.htm>.
"Hillman Fasteners 20 Pack #6 Plas EZ Anchor 41410", downloaded from internet May 19, 2011: <http://www.thegreathardwarestore.com/Hillman-Fasteners-20-Pack-6-Plas-EZ-Anchor-41410-p/848173.htm>.
EOS M 270 3TRPD Shown in Real Time—Machine and Scintering Pattern (published Apr. 1, 2011); pictures; 2 pages.
Evans, C.; "What is Rapid Prototyping?"; XP002681573; http://www.articlesbase.com/industrial-articles/what-is-rapid-prototyping-3699771.html; Nov. 11, 2010; 1 page.
Colton, Prof. J.S., "Bolt Manufacture: Process Selection", XP002681623, Georgia Institute of Technology, URL: www-old.me.gatech.edu/jonathan.colton/me4210/procselect1.pdf, 1999, pp. 1-37.
"TIXOS—Implants Line Manufactured by Titanium Powder Laser Microfusion", XP002681624, Smile Dental Journal, vol. 5, No. 3, Sep. 1, 2010, p. 56.
"3D printing the printed world", XP-002683243, http://www.economist.com/node/18114221/print, Feb. 10, 2011, 9 pages.
Leno, Jay; "Jay Leno's 3D Printer Replaces Rusty Old Parts," Popular Mechanics, http://www.popularmechanics.com/cars/jay-leno/technology/4320759, Jun. 8, 2009, 3 pages.

* cited by examiner

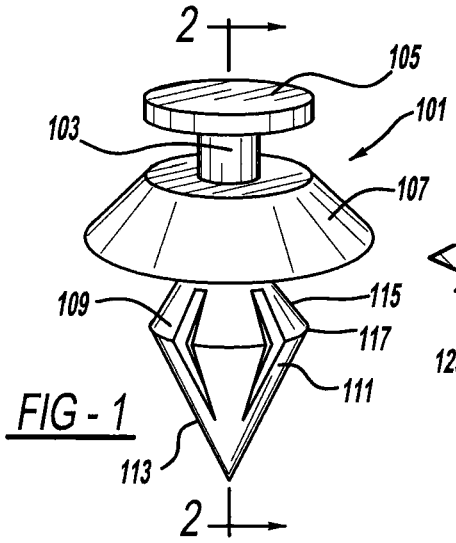

FIG - 1

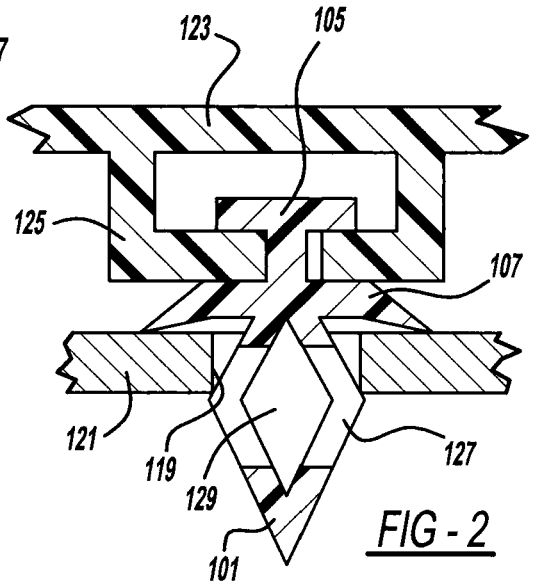

FIG - 2

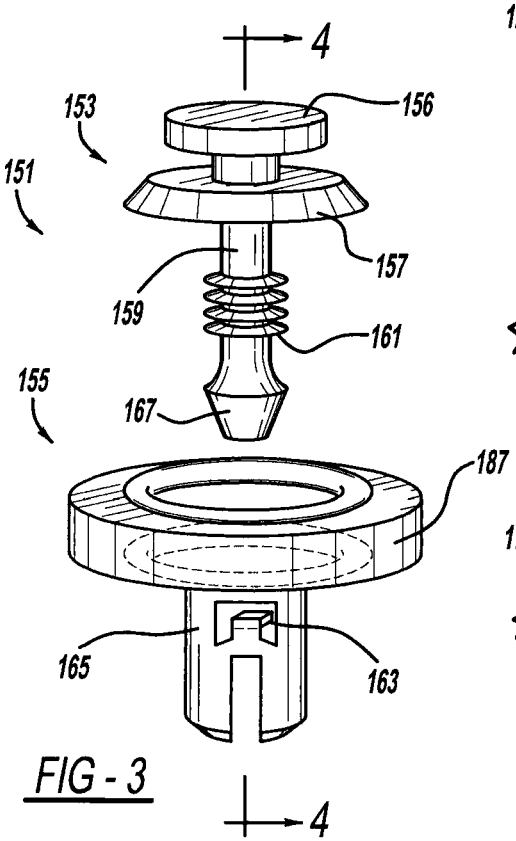

FIG - 3

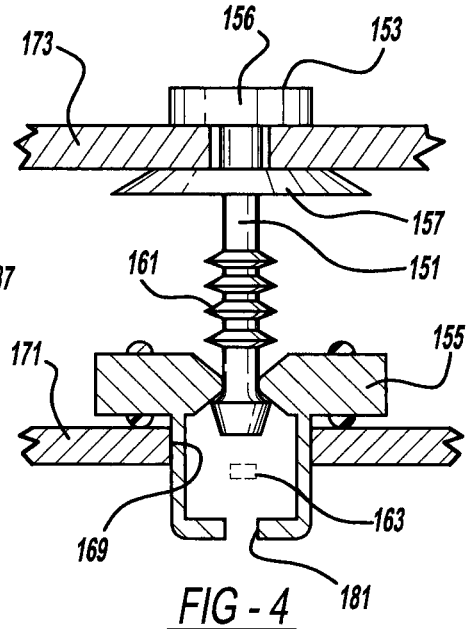

FIG - 4

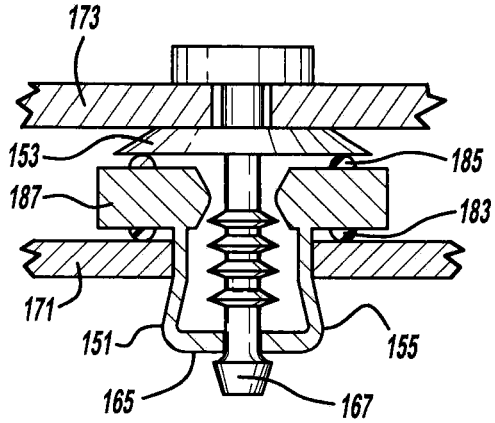

FIG - 5

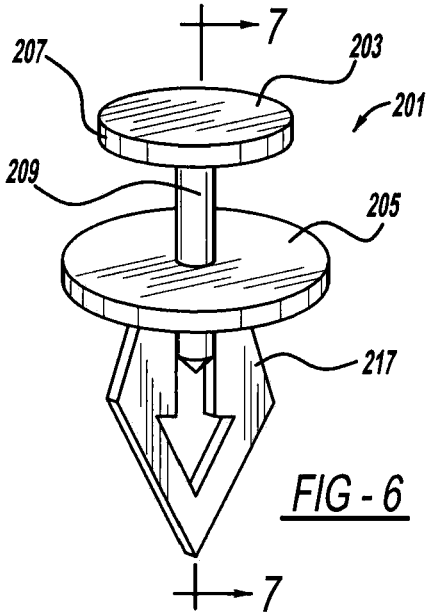

FIG - 6

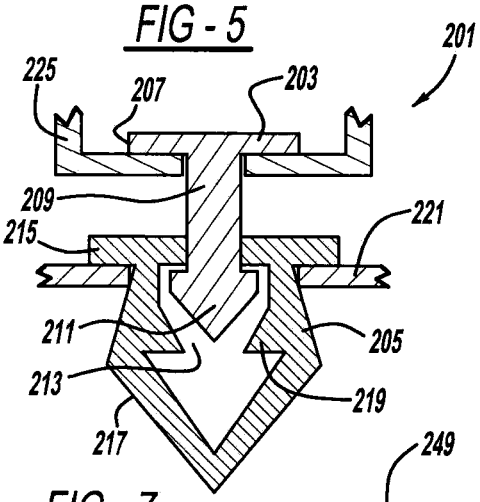

FIG - 7

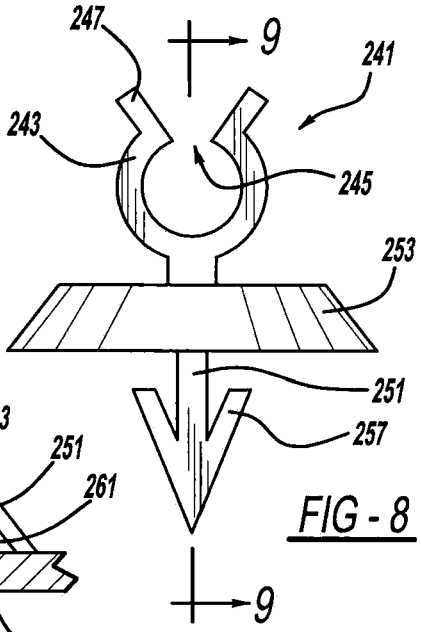

FIG - 8

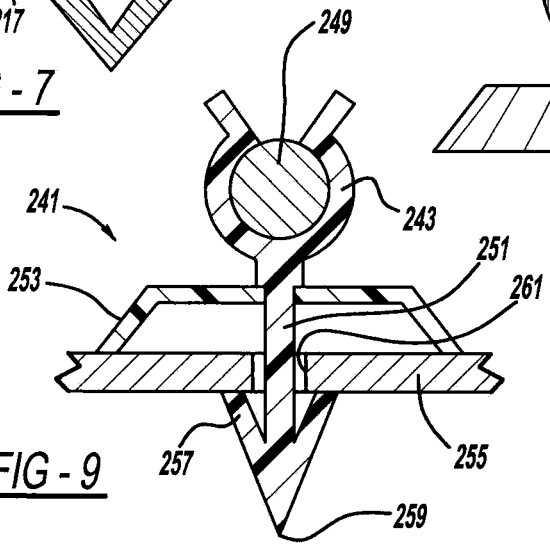

FIG - 9

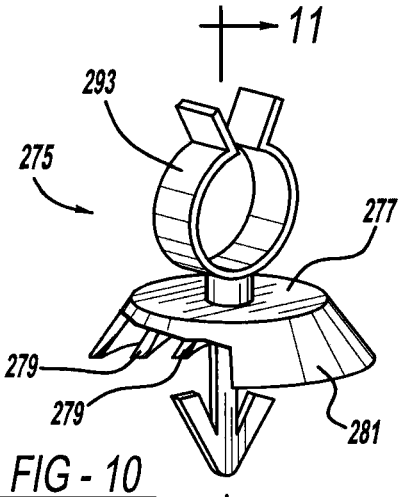

FIG - 10

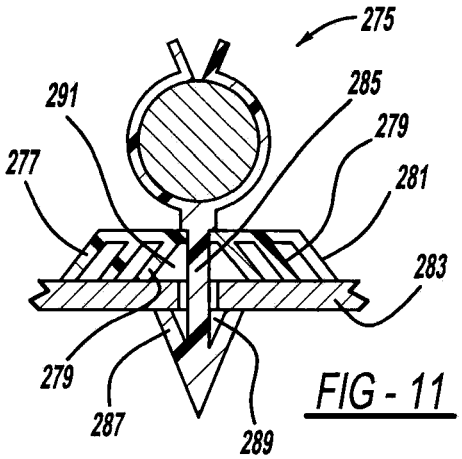

FIG - 11

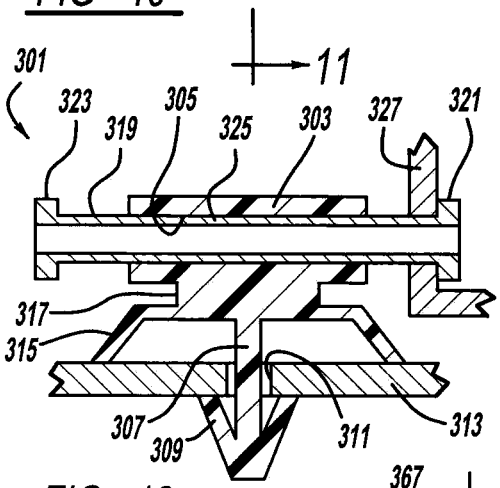

FIG - 13

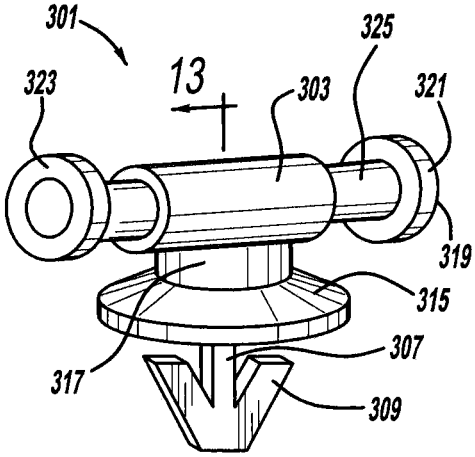

FIG - 12

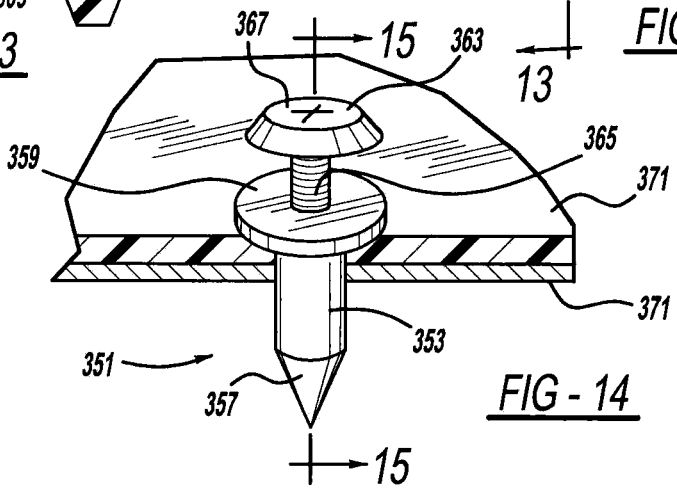

FIG - 14

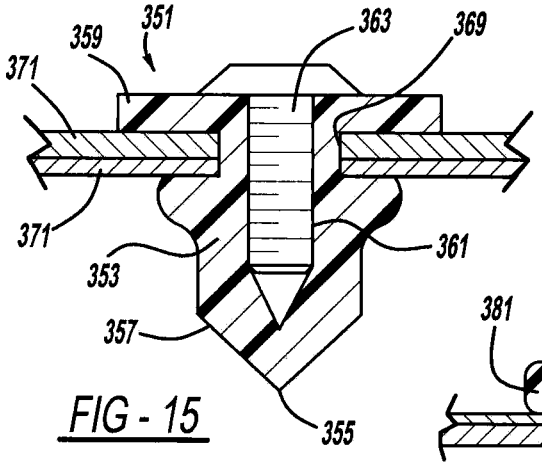

FIG - 15

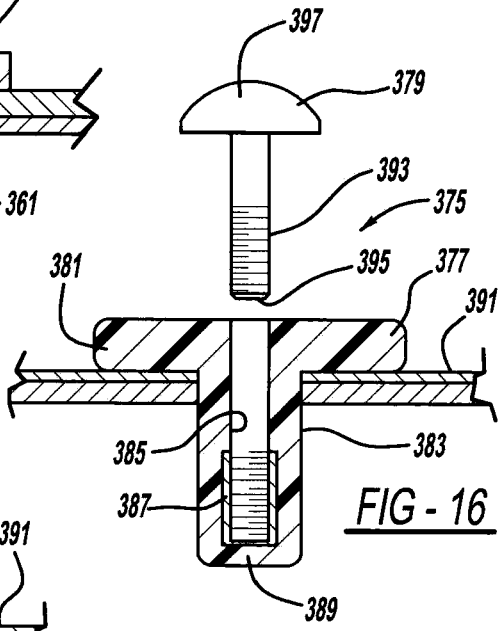

FIG - 16

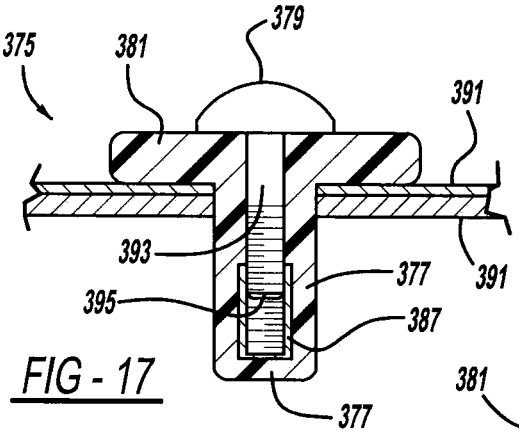

FIG - 17

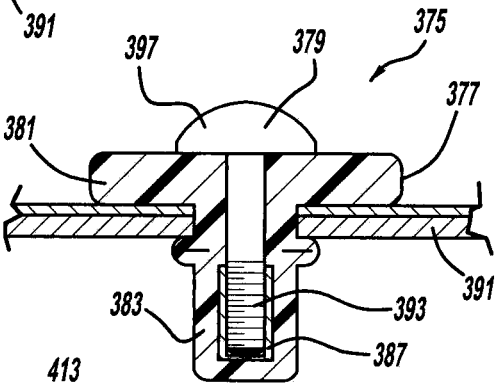

FIG - 18

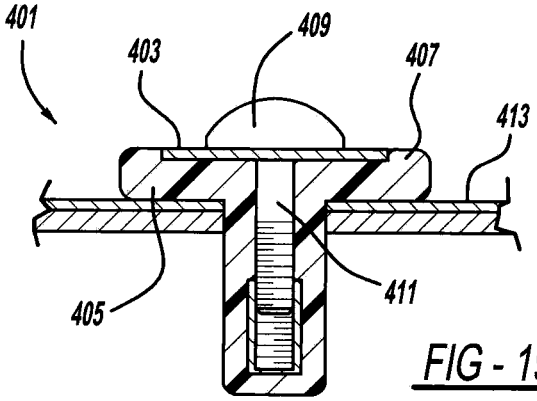

FIG - 19

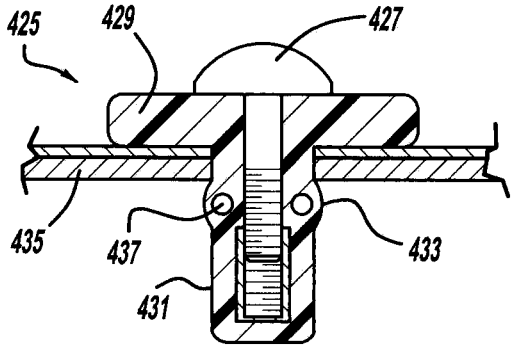

FIG - 20

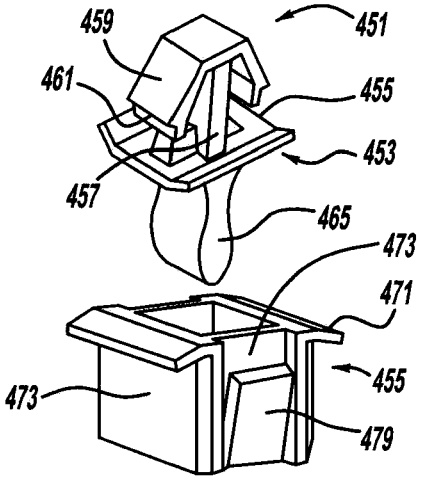

FIG - 21

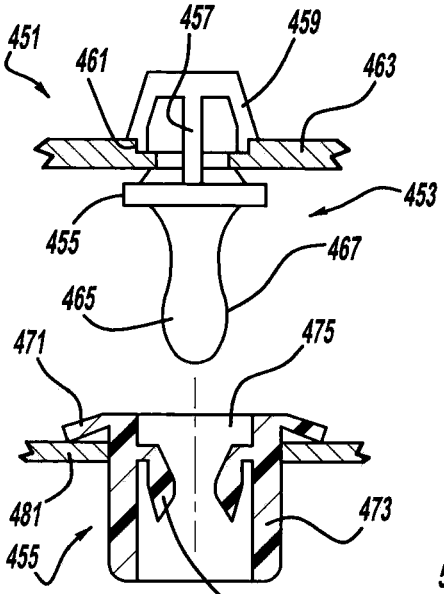

FIG - 22

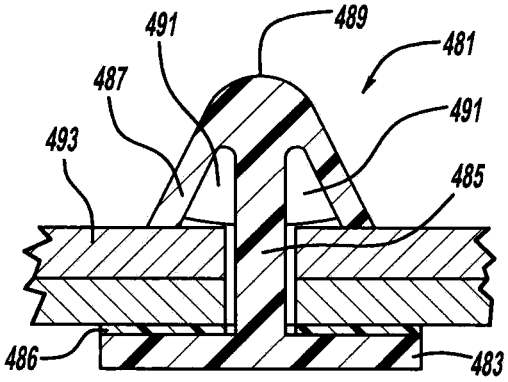

FIG - 23

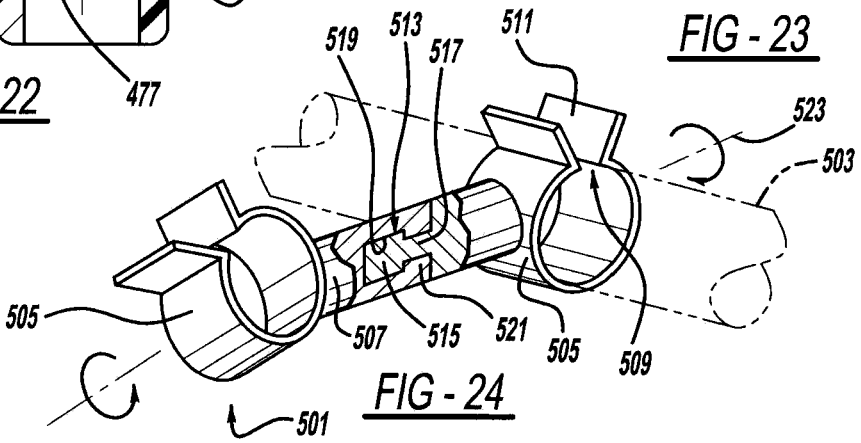

FIG - 24

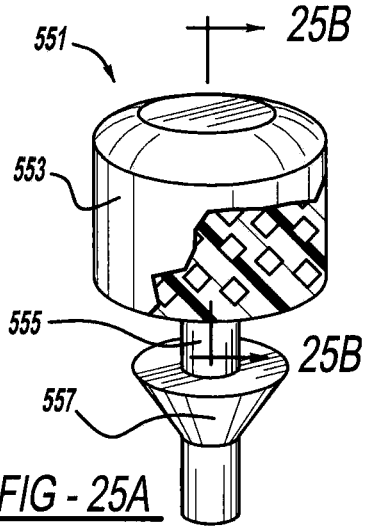

FIG - 25A

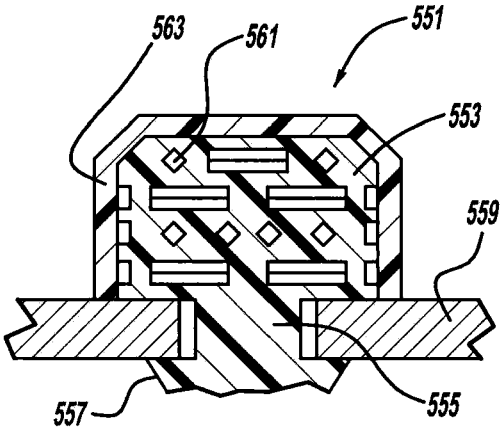

FIG - 25B

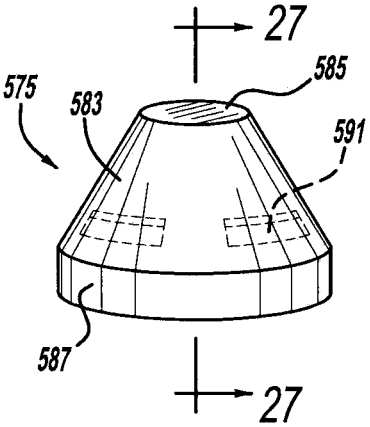

FIG - 26

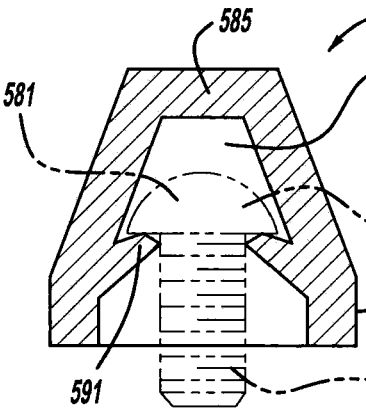

FIG - 27

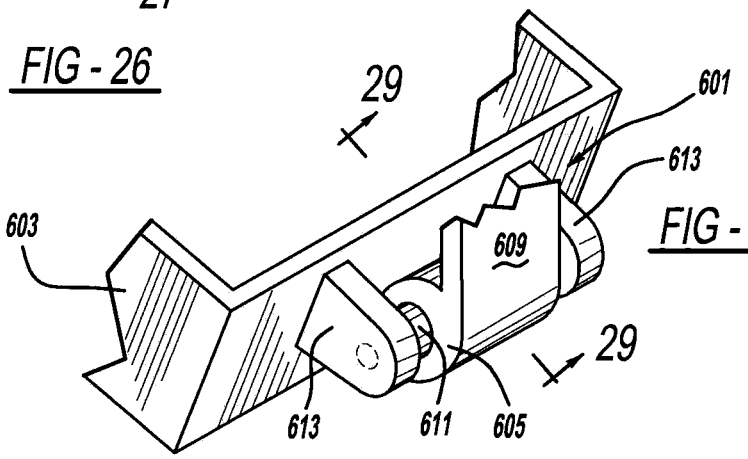

FIG - 28

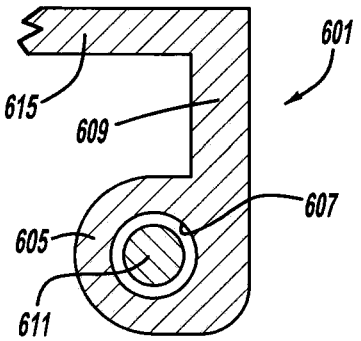

FIG - 29

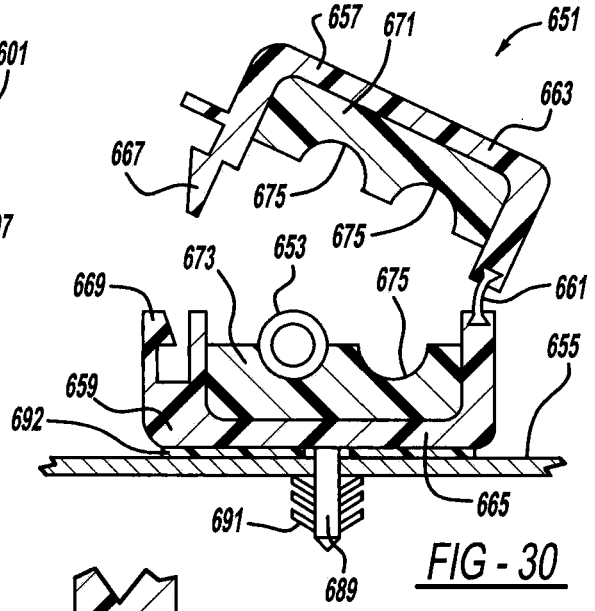

FIG - 30

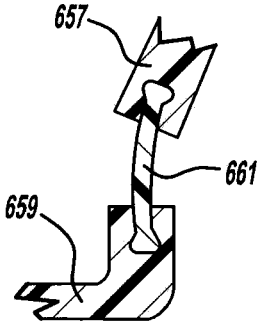

FIG - 31

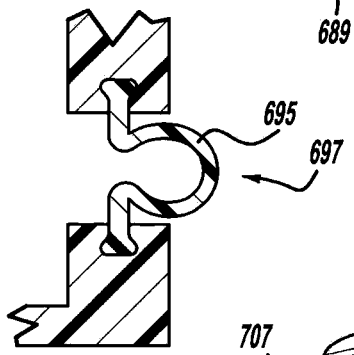

FIG - 32

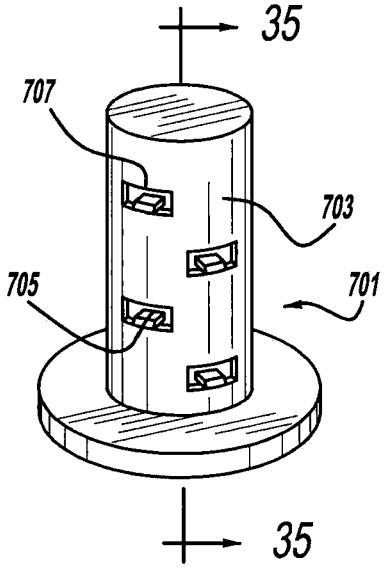

FIG - 33

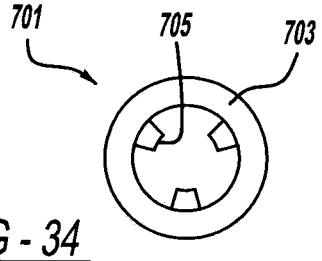

FIG - 34

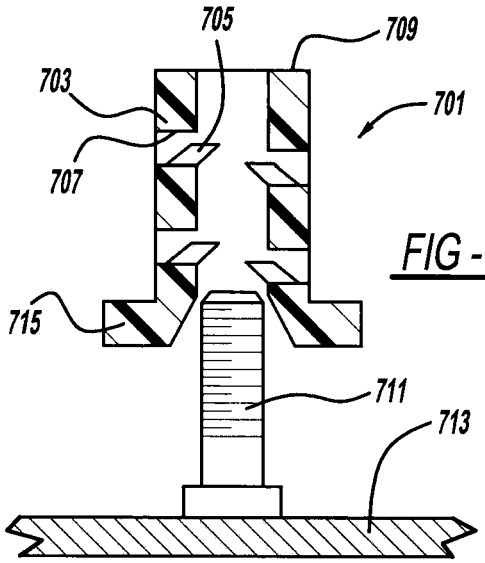

FIG - 35

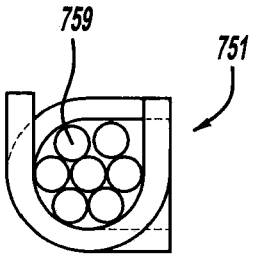

FIG - 37

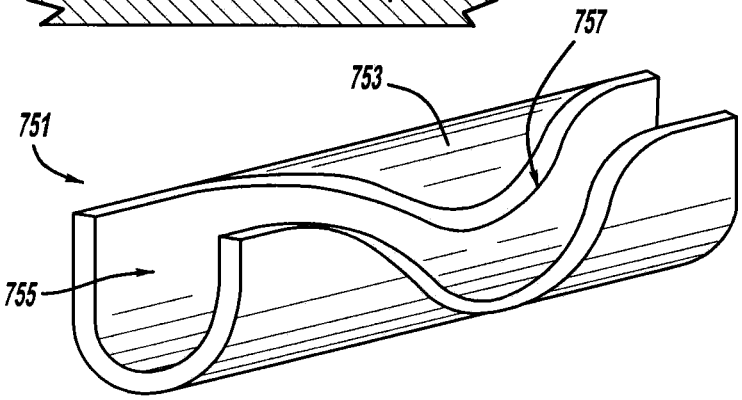

FIG - 36

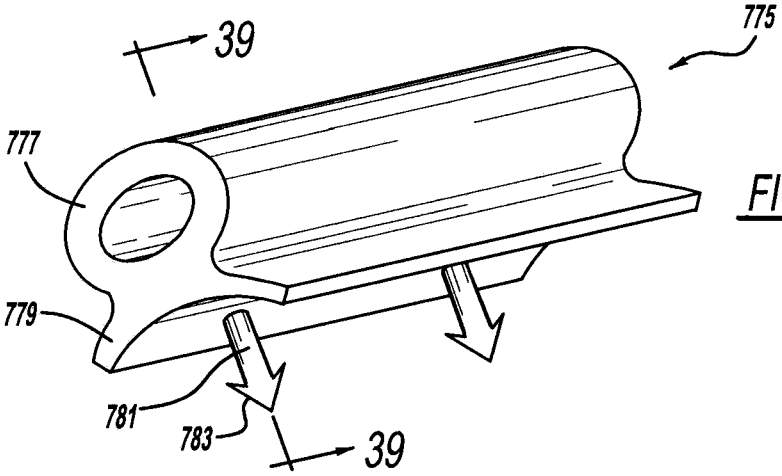

FIG - 38

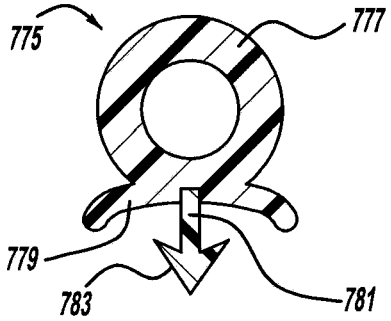

FIG - 39

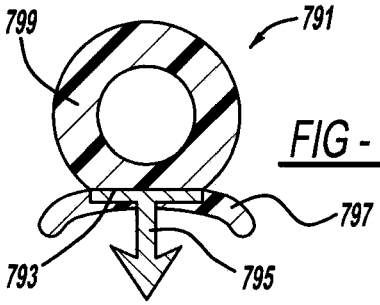

FIG - 40

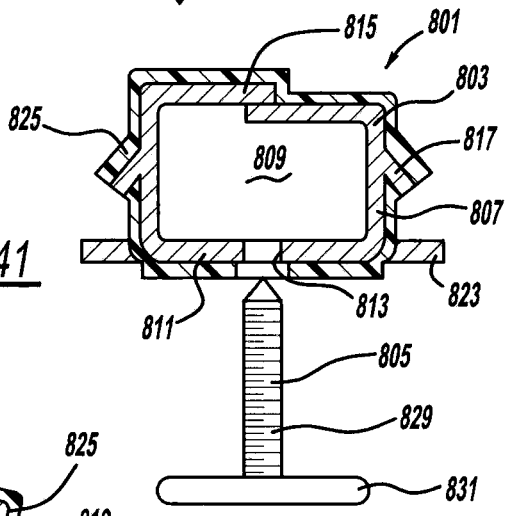

FIG - 41

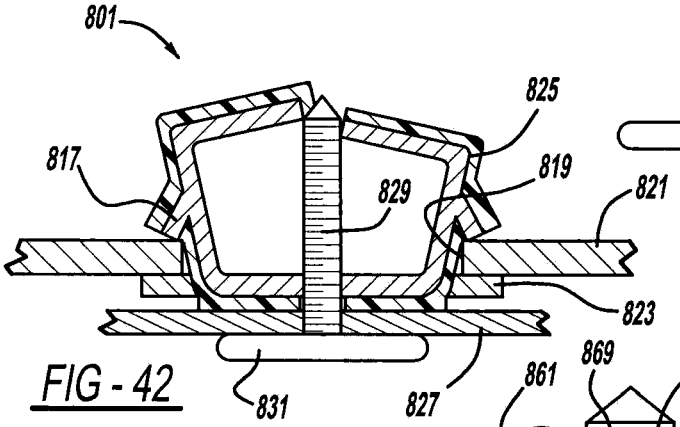

FIG - 42

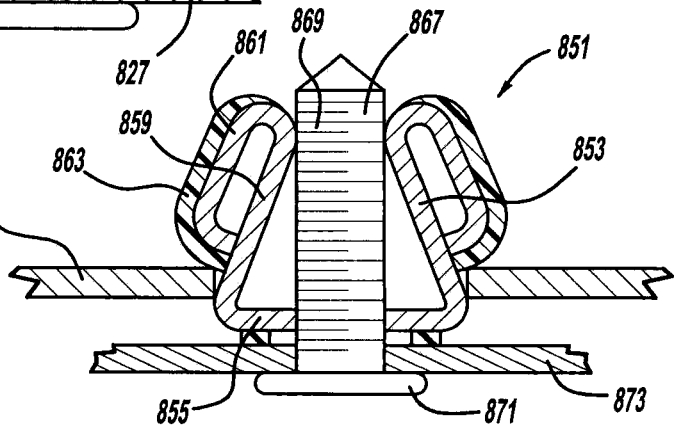

FIG - 44

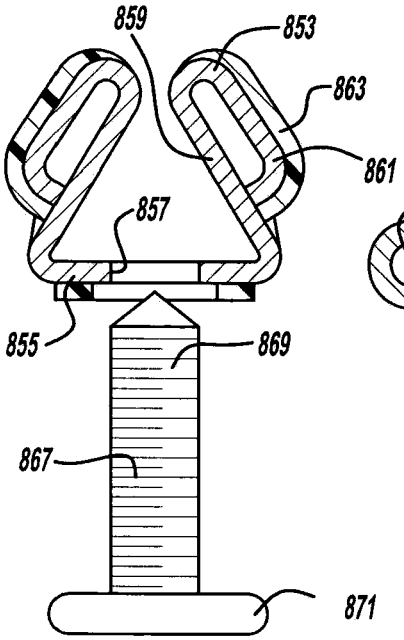

FIG - 43

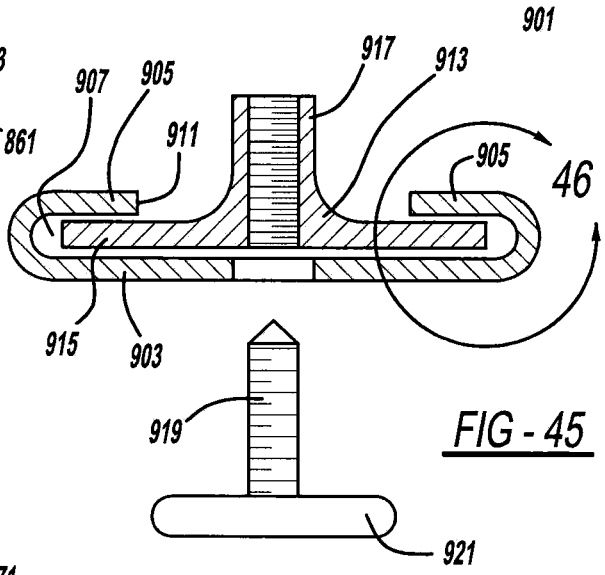

FIG - 45

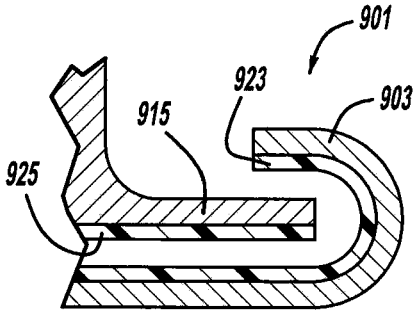

FIG - 46

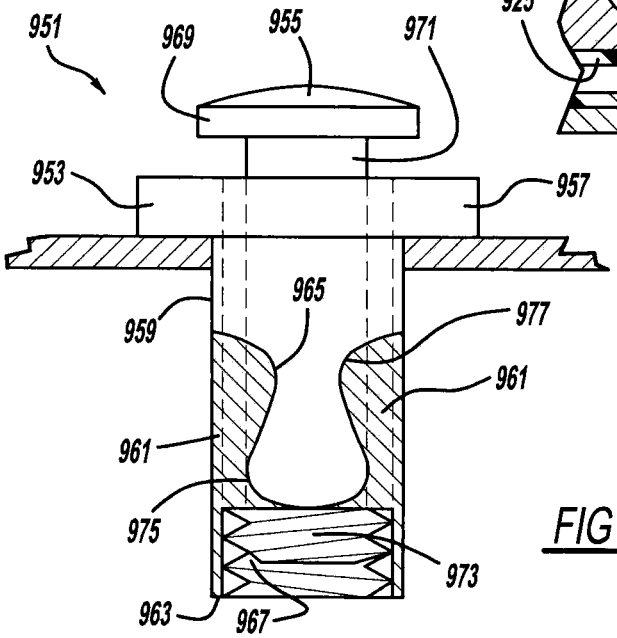

FIG - 47

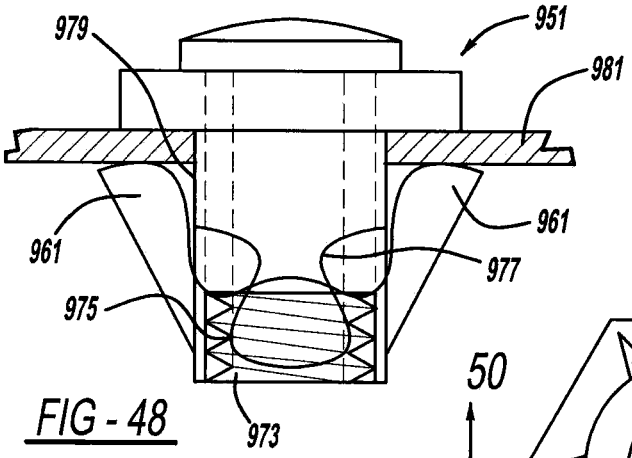

FIG - 48

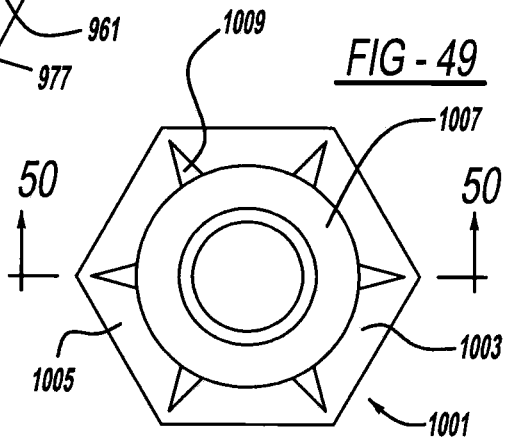

FIG - 49

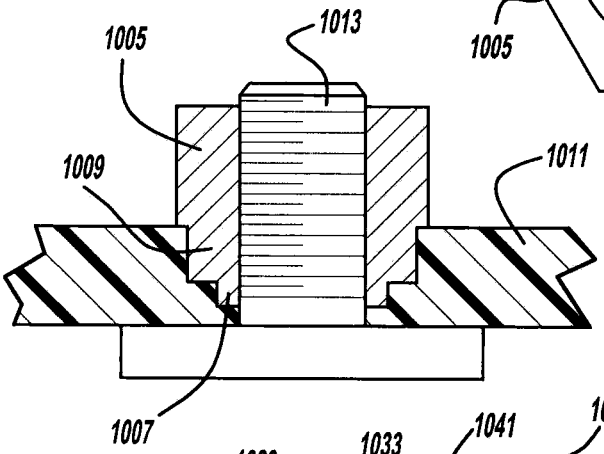

FIG - 50

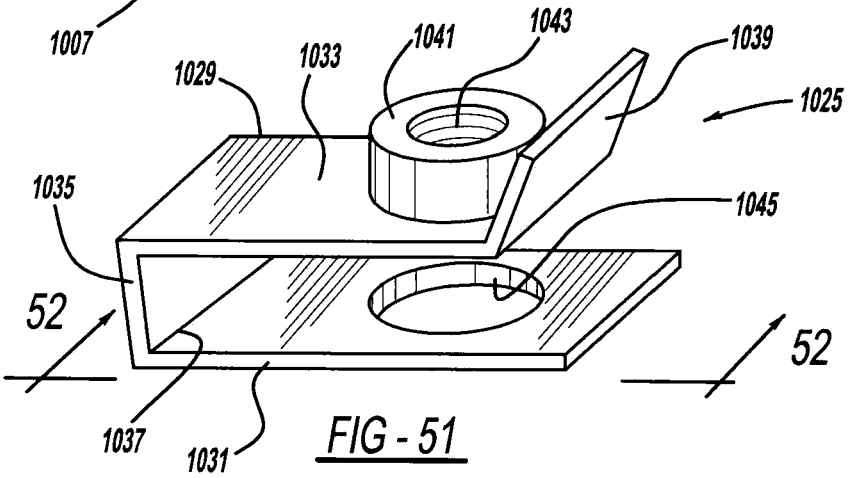

FIG - 51

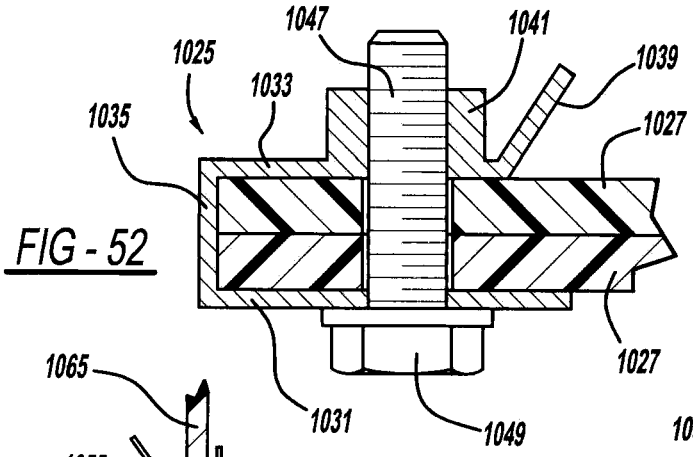

FIG - 52

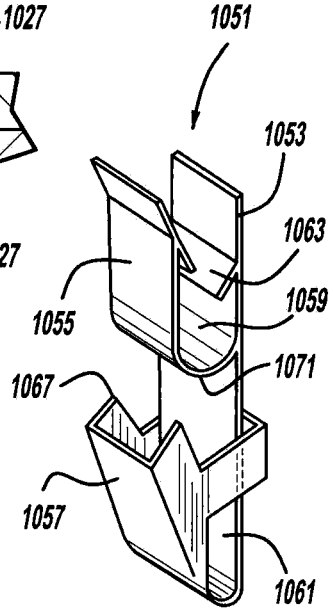

FIG - 53

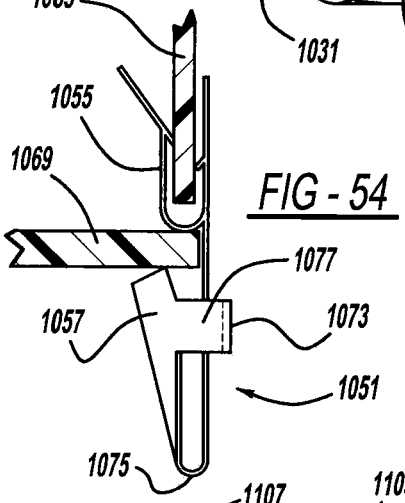

FIG - 54

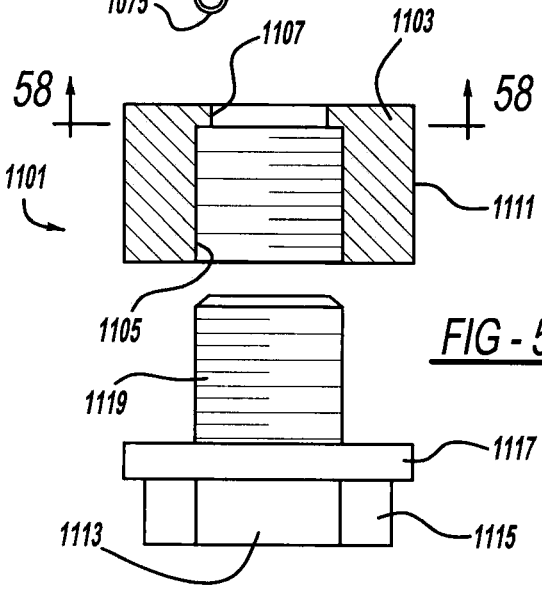

FIG - 56

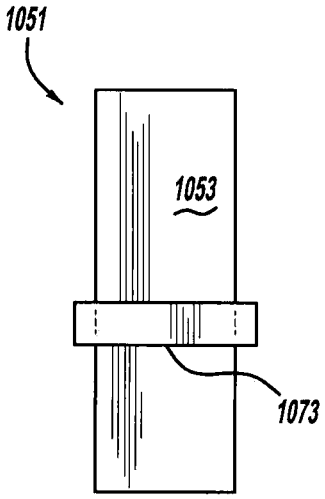

FIG - 55

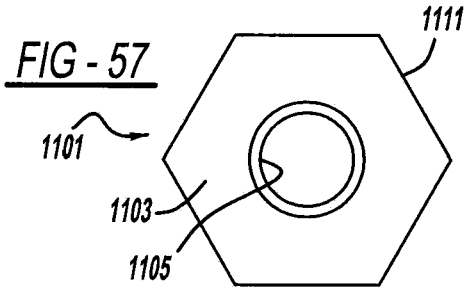

FIG - 57

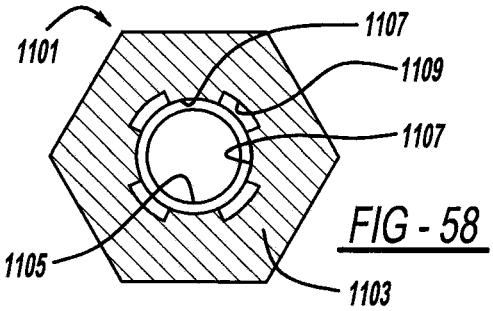

FIG - 58

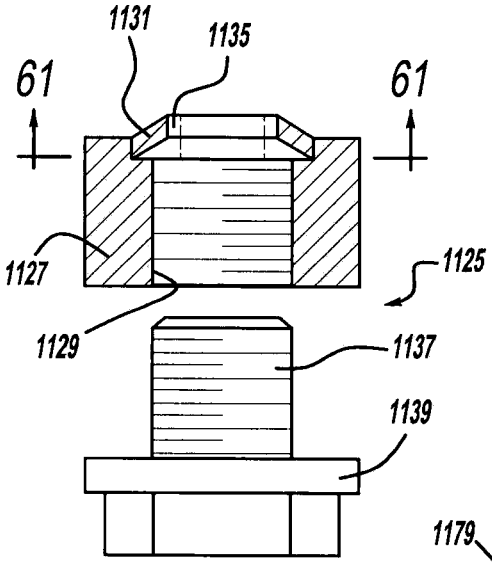

FIG - 59

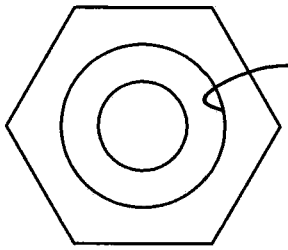

FIG - 60

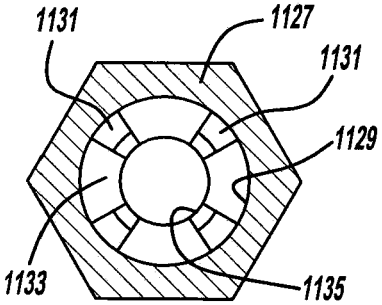

FIG - 61

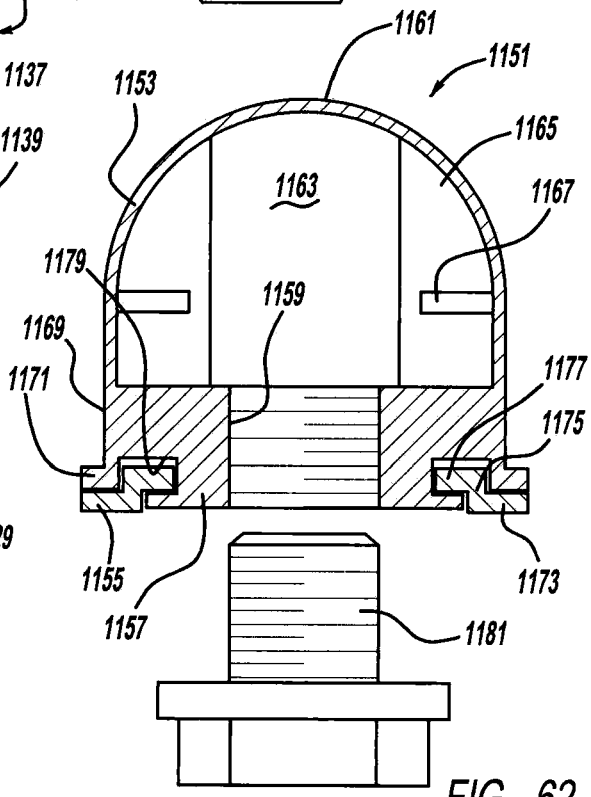

FIG - 62

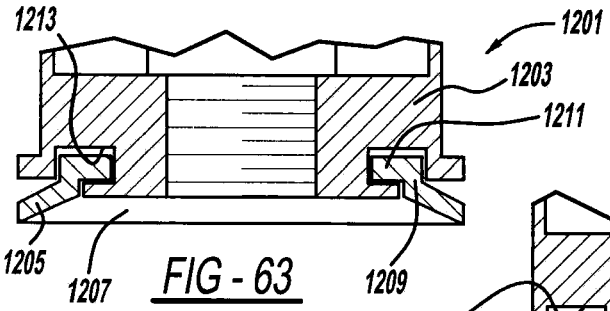

FIG - 63

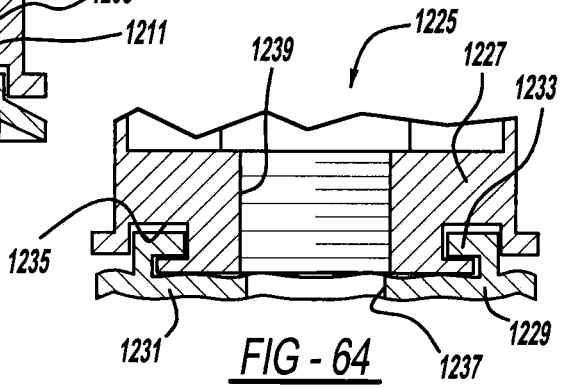

FIG - 64

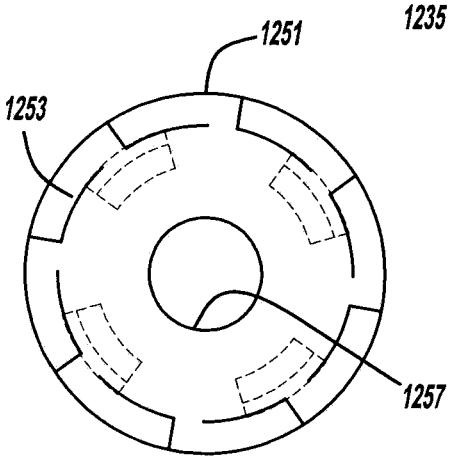

FIG - 66

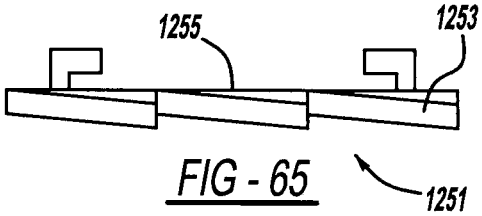

FIG - 65

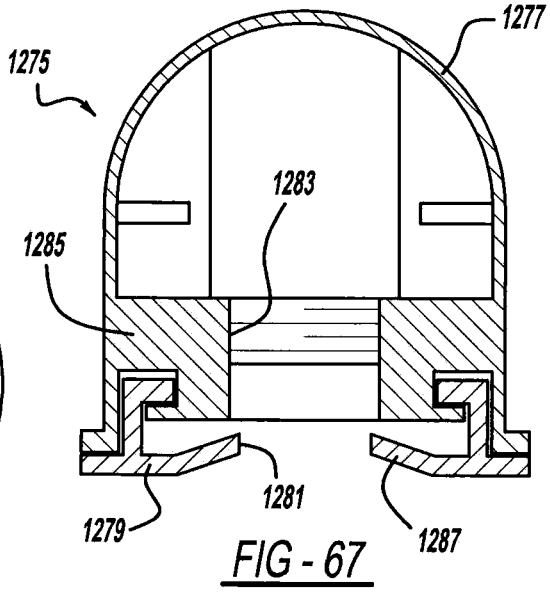

FIG - 67

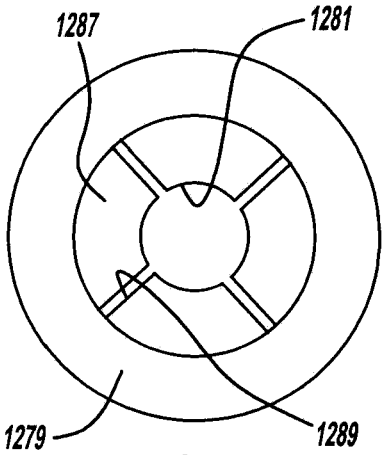

FIG - 68

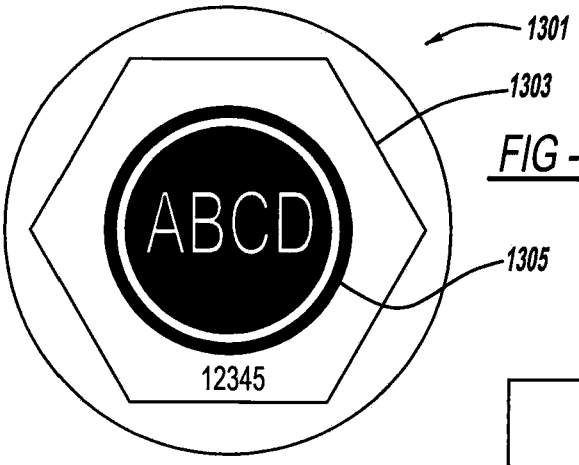

FIG - 69

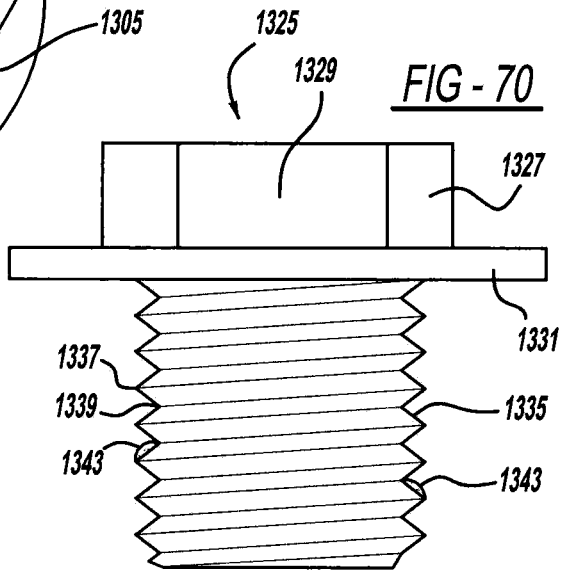

FIG - 70

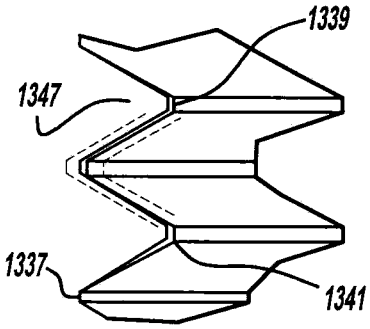

FIG - 71

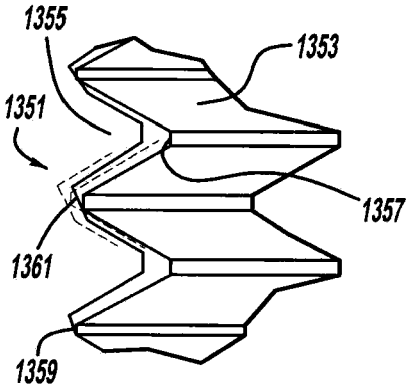

FIG - 73

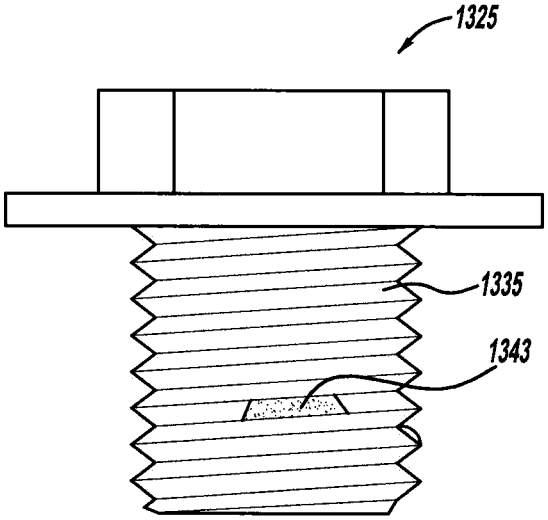

FIG - 72

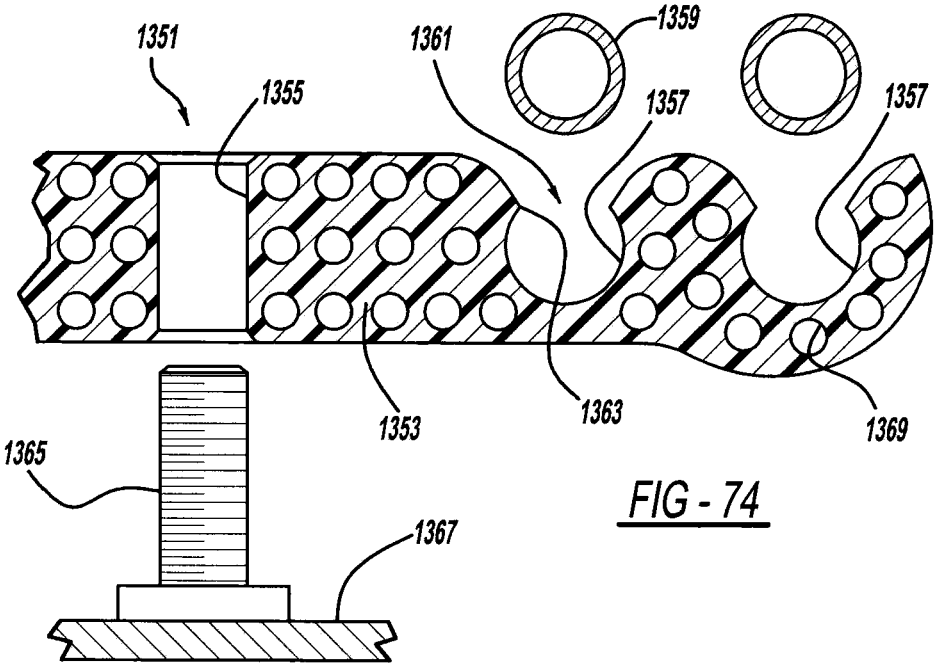

FIG - 74

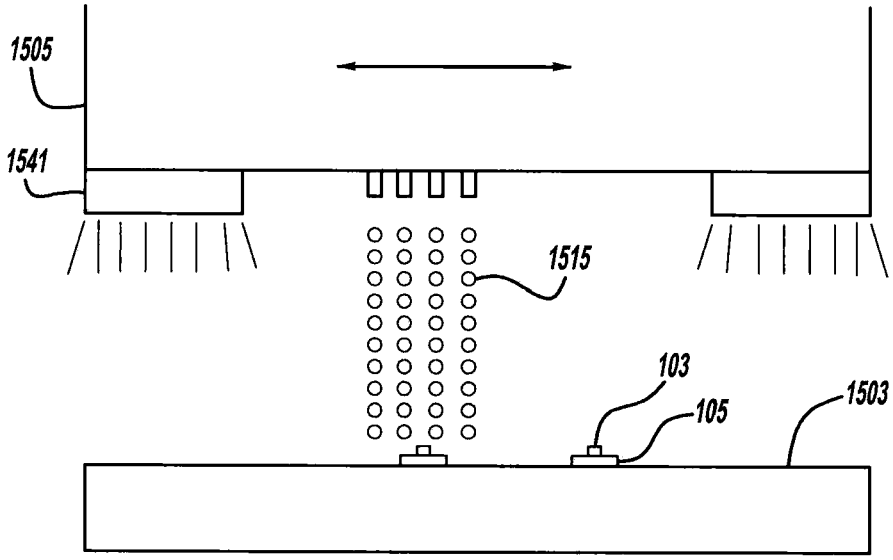

FIG - 87A

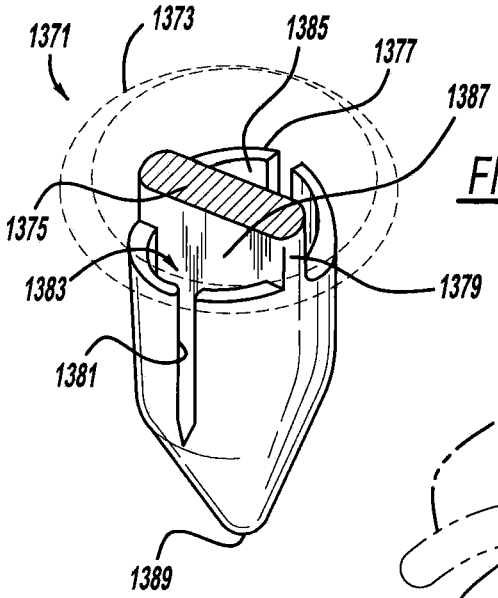

FIG - 75

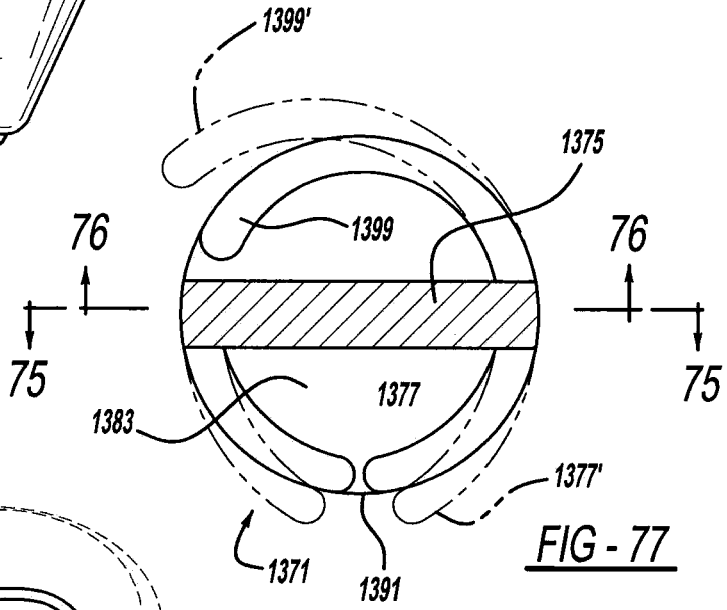

FIG - 77

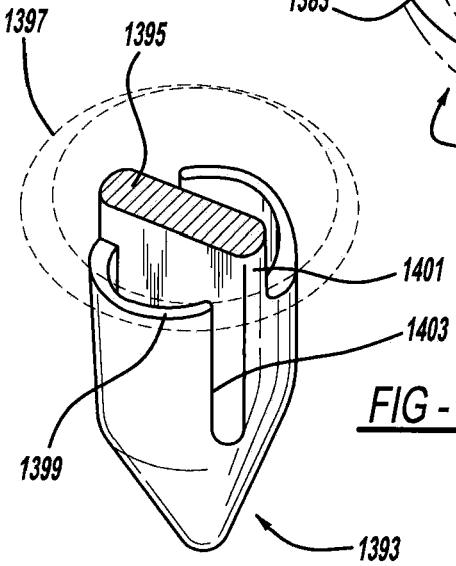

FIG - 76

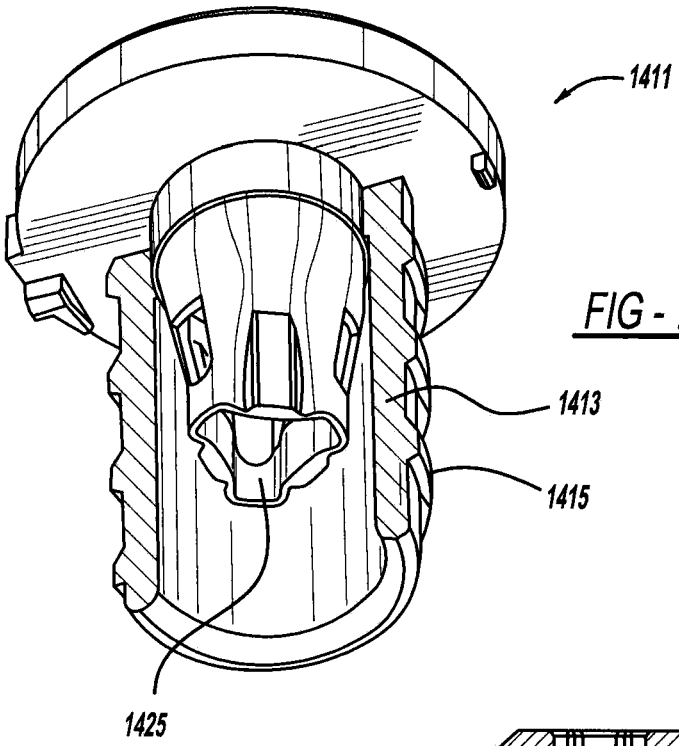
1411
1413
1415
1425

FIG - 78

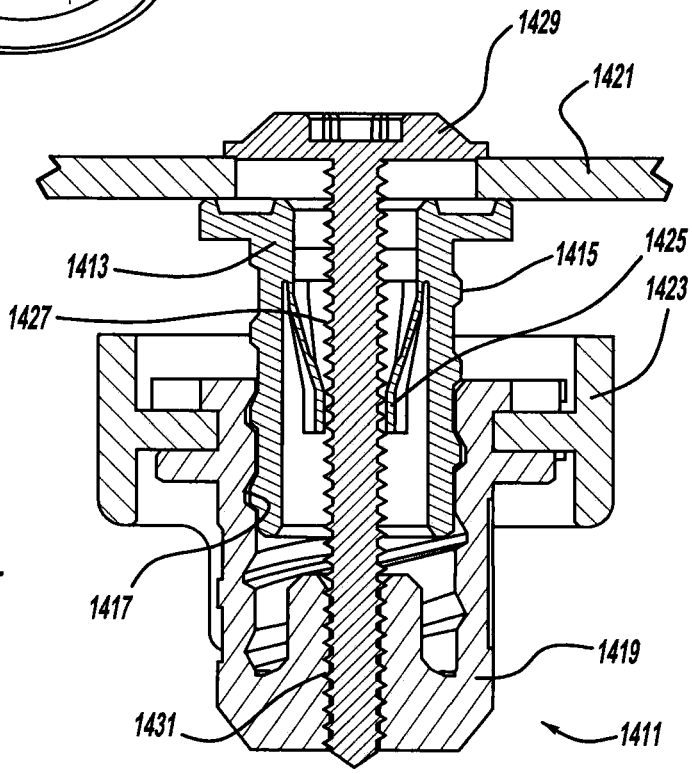
1429
1421
1413
1415
1425
1423
1427
1417
1419
1431
1411

FIG - 79

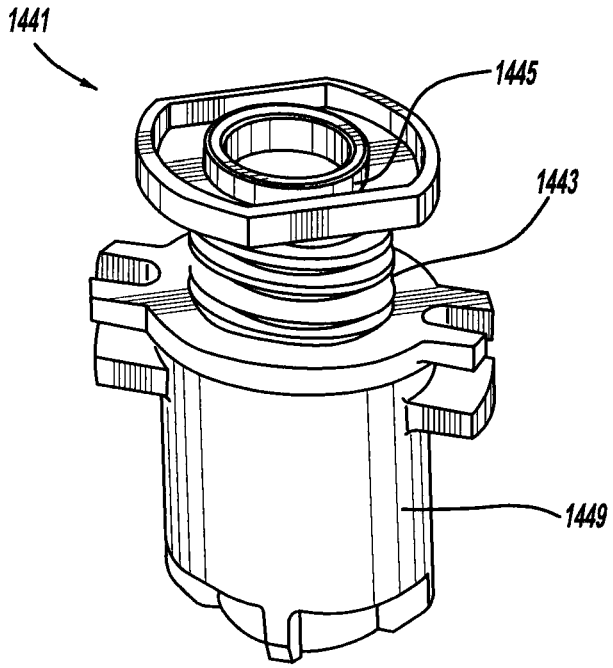
1441
1445
1443
1449

FIG - 80

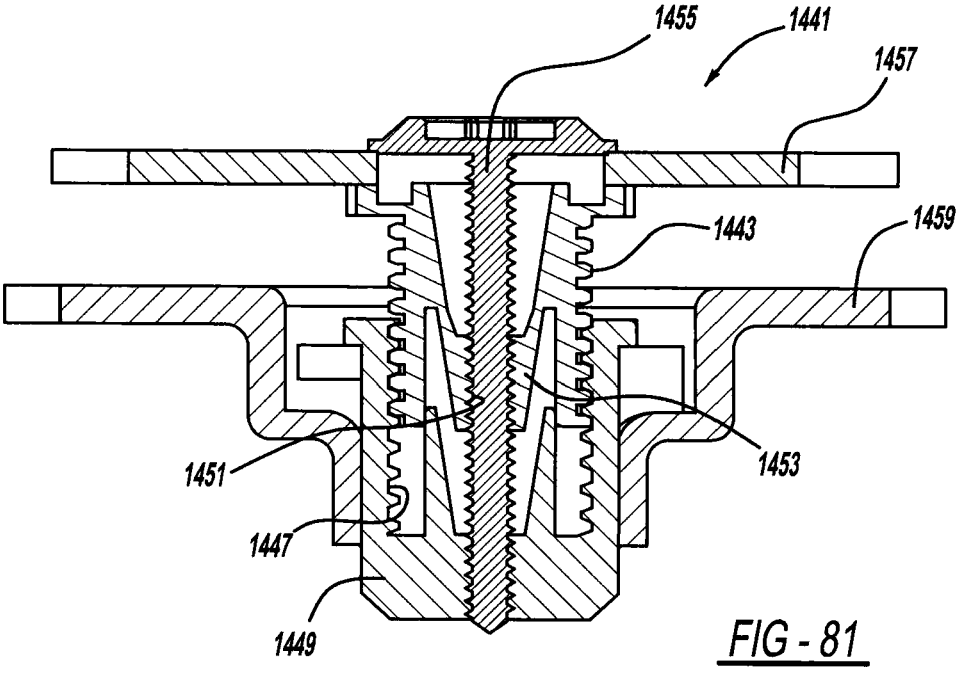
1455
1441
1457
1443
1459
1451
1453
1447
1449

FIG - 81

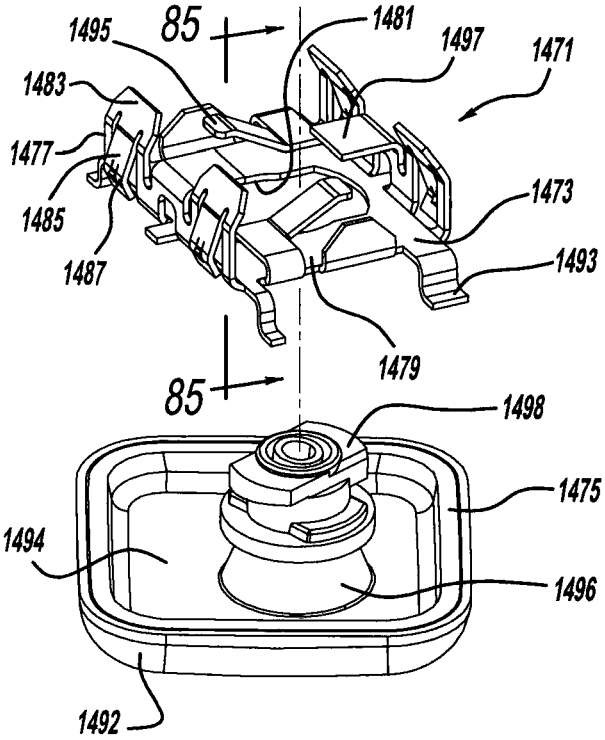
85
1495
1481
1497
1471
1483
1477
1485
1487
1473
1493
1479
85
1498
1475
1494
1496
1492

FIG - 82

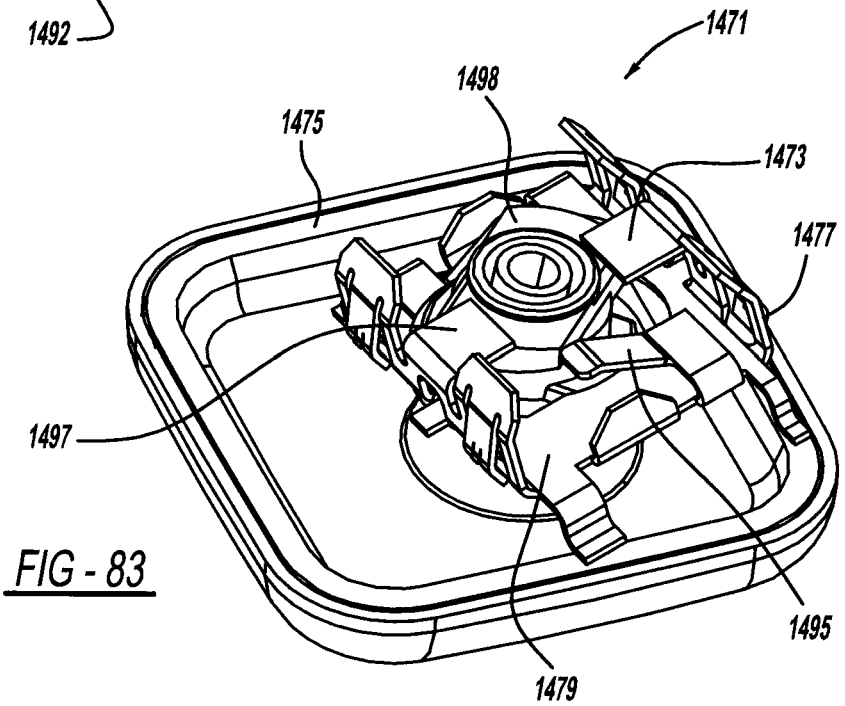
1471
1498
1475
1473
1477
1497
1495
1479

FIG - 83

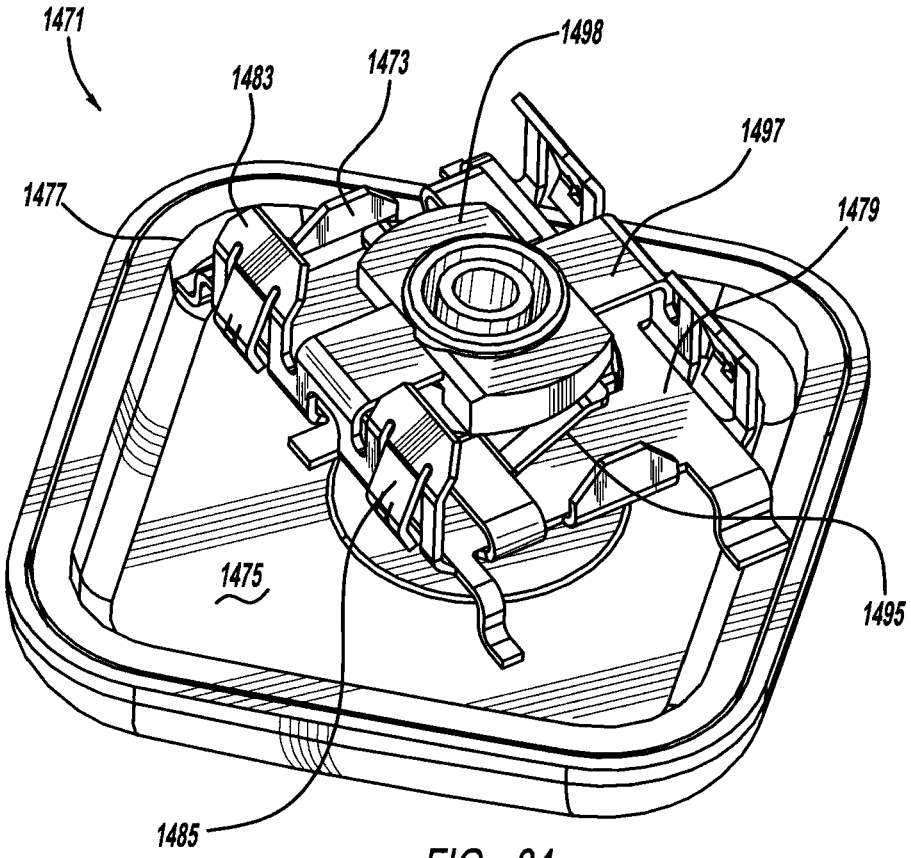
1471
1483
1473
1498
1497
1477
1479
1475
1495
1485

FIG - 84

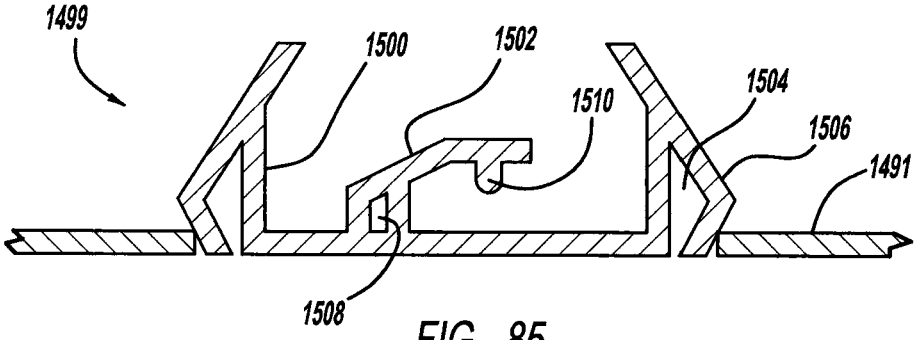
1499
1500
1502
1510
1504
1506
1491
1508

FIG - 85

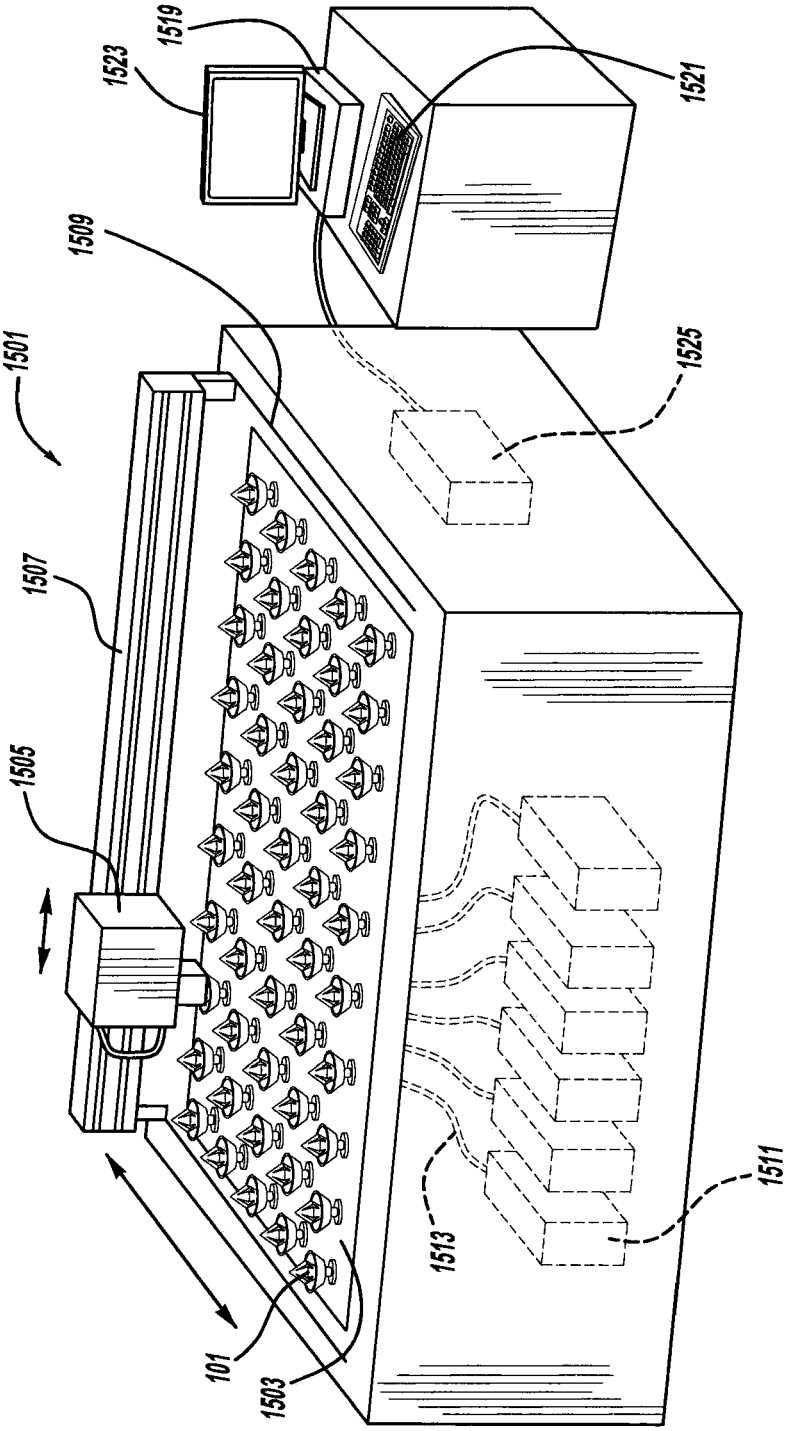

FIG - 86

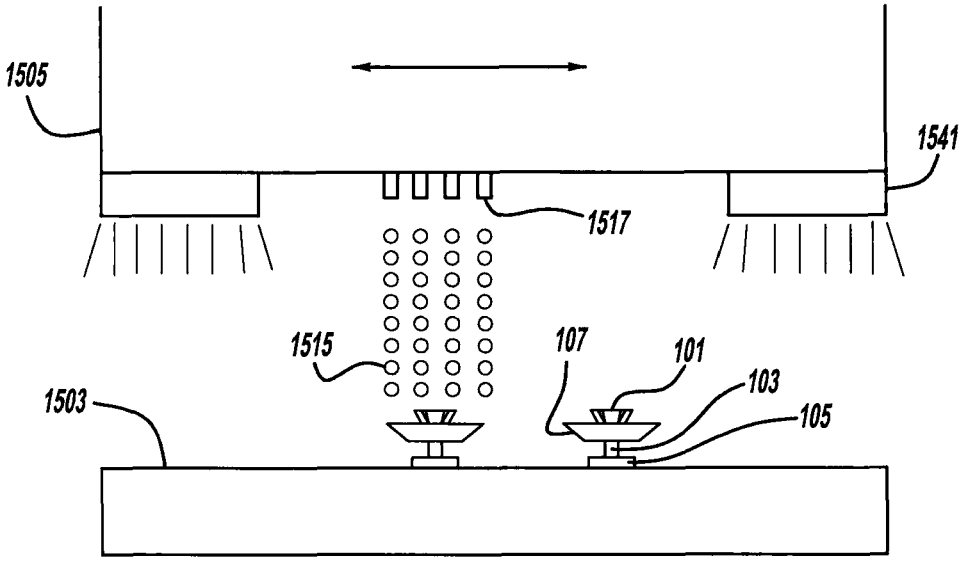

FIG - 87B

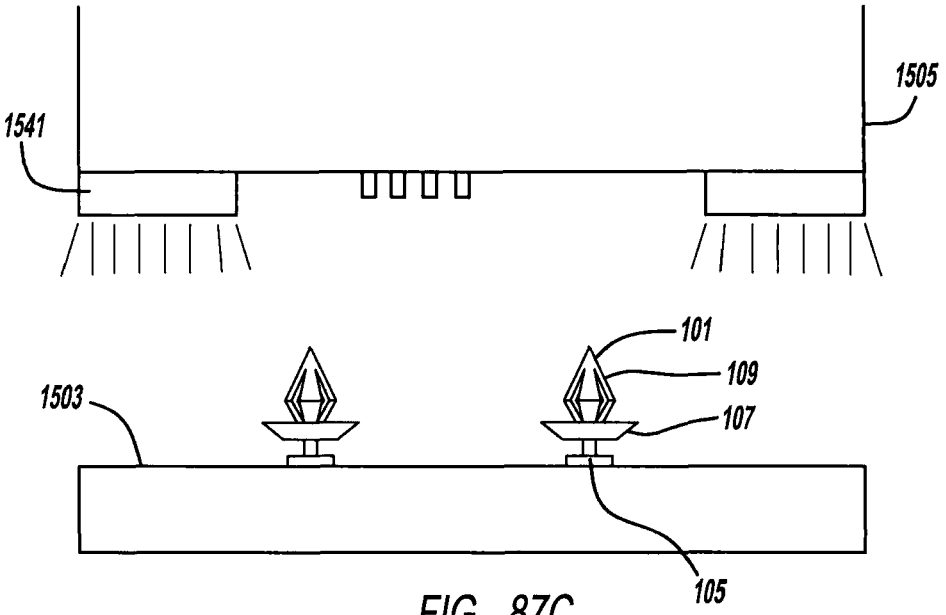

FIG - 87C

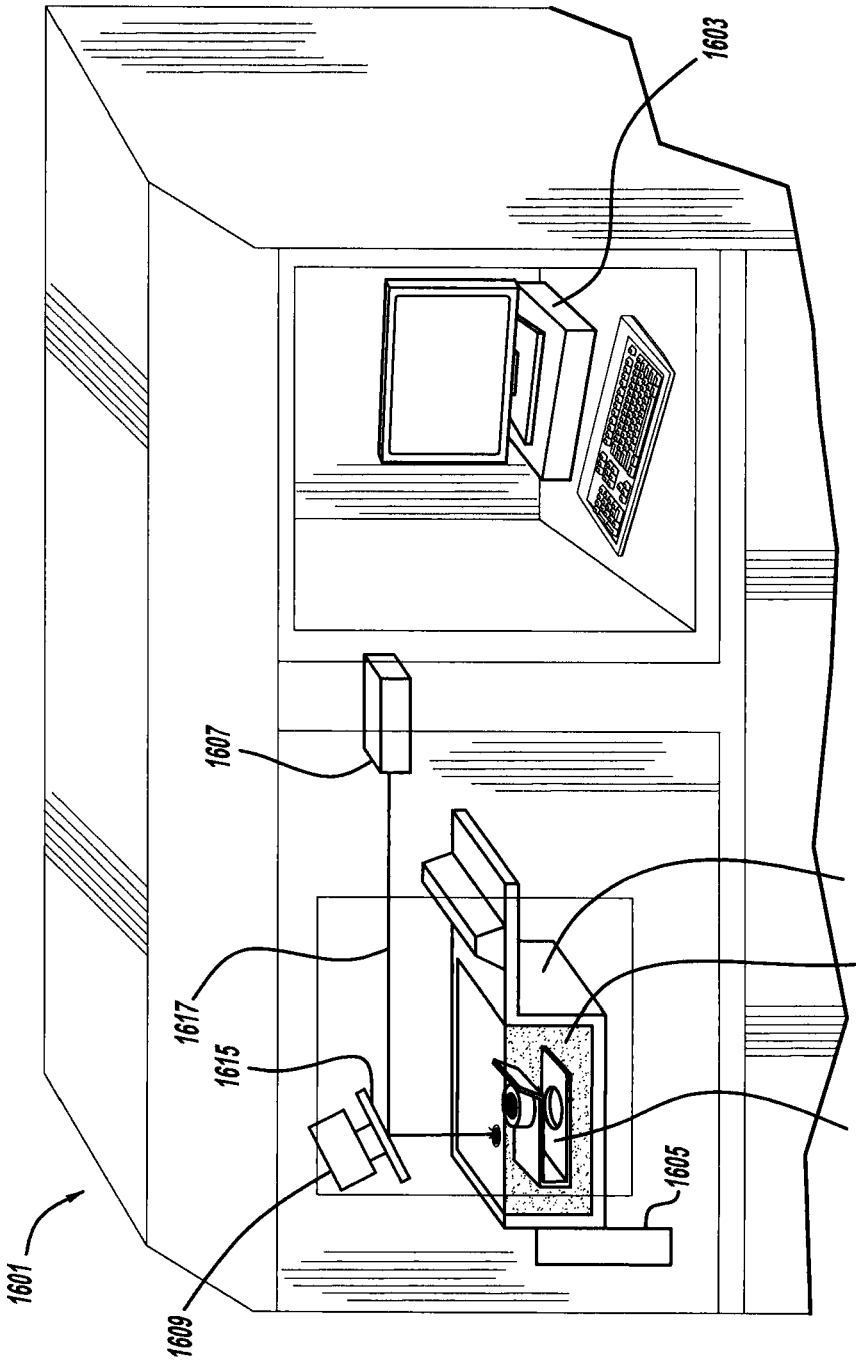

FIG - 88

METHOD OF MAKING HINGED FASTENERS BY THREE-DIMENSIONAL PRINTING

CROSS-RELATED APPLICATIONS

This application is a divisional application of U.S. patent application Ser. No. 14/092,101, filed on Nov. 27, 2013, now issued as U.S. Pat. No. 9,511,544; which is a continuation of International Patent Application Serial No. PCT/US2012/039445, filed on May 24, 2012; which claims priority to U.S. Provisional Patent Application Ser. No. 61/492,503, filed on Jun. 2, 2011, all of which are incorporated by reference herein.

BACKGROUND AND SUMMARY

The present invention relates generally to fasteners and more particularly to manufacturing of a fastener.

Traditionally, polymeric parts are made by injection or extrusion molding. In such processes, a heated polymeric liquid is inserted into match metal dies under high pressure, after which the dies are internally cooled in order to cure the manufactured parts. Air is vented from the die cavity when the molten polymer is injected therein. Injection and extrusion molding are ideally suited for high volume production where one hundred thousand or more parts per year are required. These traditional manufacturing processes, however, disadvantageously require very expensive machined steel dies, which are difficult and time consuming to modify if part revisions are desired, and are subject to problematic part-to-part tolerance variations. Such variations are due to molding shrinkage during curing, molding pressure differences, part warpage due to internal voids and external sink marks, and the like. The expense of this traditional die tooling makes lower volume production of polymeric parts prohibitively expensive.

It is also known to use stereolithography to produce non-functional polymeric parts. Such conventional stereolithography methods use a laser to create a layered part on a moving platform within a vat of liquid polymer. The part rises from the liquid as it is being made. These parts are extremely slow to produce and impractically brittle.

In accordance with the present invention, a fastener is provided. In another aspect, a fastener is made of layers of material, a light curable material and/or multiple built-up materials. Another aspect uses a three-dimensional printing machine to emit material from an ink jet printing head to build up a fastener. A further aspect provides a method of making a fastener by depositing material in layers and/or a built-up arrangement. Yet another aspect makes a fastener by depositing material in an environment where the fastener is essentially surrounded by a gas, such as air, during the material deposition. A method of making a multi-material and/or pre-assembled fastener is also employed in another aspect. In still another embodiment, direct laser metal sintering is used to create a fastener.

The present fastener and method are advantageous over traditional devices. For example, the present fastener and method do not require any unique tooling or dies, thereby saving hundreds of thousands of dollars and many weeks of die manufacturing time. Furthermore, the present method allows for quick and inexpensive design and part revisions from one manufacturing cycle to another. In another aspect, part-to-part tolerance variations are essentially non-existent with the present fastener and method such that at least ten, and more preferably at least forty, identical fasteners can be

produced in a single machine manufacturing cycle. For other aspects of the present fastener and method, multiple head openings, a stationary support for the built-up fasteners within the machine, and the ambient air manufacturing environment allow for increased manufacturing speed, simpler machinery and ease of access to the manufactured fasteners. It is also noteworthy that the present fastener and method are advantageously capable of creating die-locked part configurations that would otherwise be prohibitively expensive, if not impossible, to produce with conventional dies. In other aspects, the present fastener and method reduce post-manufacturing assembly by creating mating parts in a pre-installed or pre-assembled condition within the same manufacturing machine cycle; for example, this can apply to screws, washers, inserts and/or seals. Materials of different characteristics, such as flexibility, tensile strength, hoop strength, chemical resistance, UV fade resistance, or even color can be deposited to create different sections of the fastener at essentially the same time. Additional advantages and features of the present invention can be found in the following description and appended claims as well as in the accompanying drawings.

BRIEF DESCRIPTION OF THE DRAWINGS

FIG. **1** is a perspective view showing a first embodiment of the present fastener;

FIG. **2** is a cross-sectional view, taken along line **2-2** of FIG. **1**, showing the first embodiment fastener in a fully installed condition;

FIG. **3** is an exploded perspective view showing a second embodiment fastener;

FIG. **4** is a partially cross-sectional view, taken along line **4-4** of FIG. **3**, showing the second embodiment fastener in an intermediate installed condition;

FIG. **5** is a partially cross-sectional view, like that of FIG. **4** showing the second embodiment fastener in a fully installed condition;

FIG. **6** is a perspective view, showing a third embodiment fastener in an intermediate installed condition;

FIG. **7** is a cross-sectional view, taken along line **7-7** of FIG. **6**, showing the third embodiment fastener in the intermediate installed condition;

FIG. **8** is a side-elevational view showing a fourth embodiment fastener;

FIG. **9** is a cross-sectional view, taken along line **9-9** of FIG. **8**, showing the fourth embodiment fastener in an installed condition;

FIG. **10** is a partially fragmented perspective view showing a fifth embodiment fastener;

FIG. **11** is a cross-sectional view, taken along line **11-11** of FIG. **10**, showing the fifth embodiment fastener in an installed condition;

FIG. **12** is a perspective view showing a sixth embodiment fastener;

FIG. **13** is a cross-sectional view, taken along line **13-13** of FIG. **12**, showing the sixth embodiment fastener in an installed condition;

FIG. **14** is a perspective view showing a seventh embodiment fastener in an intermediate installed condition;

FIG. **15** is a partially cross-sectional view, taken along line **15-15** of FIG. **14**, showing the seventh embodiment fastener in a fully installed condition;

FIG. **16** is a partially exploded and partially cross-sectional view showing an eighth embodiment fastener in an intermediate installed condition;

FIG. **17** is a view like that of FIG. **16** showing the eighth embodiment fastener in an intermediate installed condition;

FIG. **18** is a view like that of FIG. **16** showing the eighth embodiment fastener in a fully installed condition;

FIG. **19** is a partially cross-sectional view showing a ninth embodiment fastener in an intermediate assembled condition;

FIG. **20** is a partially cross-sectional view showing a tenth embodiment fastener in an intermediate installed condition;

FIG. **21** is an exploded perspective view showing an eleventh embodiment fastener;

FIG. **22** is a partially sectional and partially exploded view of the eleventh embodiment fastener in a partially installed condition;

FIG. **23** is a cross-sectional view showing a twelfth embodiment fastener in an installed condition;

FIG. **24** is a partially fragmented, perspective view showing the thirteenth embodiment fastener in an installed condition;

FIG. **25**A is a partially fragmented, perspective view showing a fourteenth embodiment fastener;

FIG. **25**B is a cross-sectional view, taken along line **25**B-**25**B of FIG. **25**A, showing the fourteenth embodiment fastener in an installed condition;

FIG. **26** is a perspective view showing a fifteenth embodiment fastener;

FIG. **27** is a cross-sectional view, taken along line **27-27** of FIG. **26**, showing a fifteenth embodiment fastener in an installed condition;

FIG. **28** is a partially fragmented, perspective view showing a sixteenth embodiment fastener;

FIG. **29** is a cross-sectional view, taken along line **29-29** of FIG. **28**, showing the sixteenth embodiment fastener;

FIG. **30** is a cross-sectional view showing a seventeenth embodiment fastener in a partially installed condition;

FIG. **31** is an enlarged cross-sectional view through a hinge area showing the seventeenth embodiment fastener;

FIG. **32** is an enlarged cross-sectional view showing a different hinge area of an eighteenth embodiment fastener like that of FIG. **30**;

FIG. **33** is a perspective view showing a nineteenth embodiment fastener;

FIG. **34** is an end elevational view, showing the nineteenth embodiment fastener;

FIG. **35** is a longitudinal sectional view, taken along line **35-35** of FIG. **33**, showing the nineteenth embodiment fastener exploded from a mating weld stud;

FIG. **36** is a perspective view showing a twentieth embodiment fastener;

FIG. **37** is an end elevational view showing the twentieth embodiment fastener in an installed condition;

FIG. **38** is a perspective view showing a twenty-first embodiment fastener;

FIG. **39** is a cross-sectional view, taken along line **39-39** of FIG. **38**, showing the twenty-first embodiment fastener;

FIG. **40** is a cross-sectional view, like that of FIG. **39**, showing a twenty-second embodiment fastener;

FIG. **41** is an exploded cross-sectional view showing a twenty-third embodiment fastener;

FIG. **42** is a cross-sectional view, like that of FIG. **41**, showing the twenty-third embodiment fastener in a fully installed condition;

FIG. **43** is an exploded cross-sectional view showing a twenty-fourth embodiment fastener;

FIG. **44** is a cross-sectional view showing the twenty-fourth embodiment fastener in an installed condition;

FIG. **45** is an exploded cross-sectional view showing a twenty-fifth embodiment fastener;

FIG. **46** is an enlarged cross-sectional view, taken within circle **46** of FIG. **45**, showing a different variation of the twenty-fifth embodiment fastener;

FIG. **47** is a partially sectional, side view showing a twenty-sixth embodiment fastener in an intermediate installed condition;

FIG. **48** is a view, like that of FIG. **47**, showing the twenty-sixth embodiment fastener in a fully installed condition;

FIG. **49** is a top elevational view showing a twenty-seventh embodiment fastener;

FIG. **50** is a cross-sectional view, taken along line **50-50** of FIG. **49**, showing the twenty-seventh embodiment fastener in a fully installed condition;

FIG. **51** is a perspective view showing a twenty-eighth embodiment fastener;

FIG. **52** is a cross-sectional view, taken along line **52-52** of FIG. **51**, showing the twenty-eighth embodiment fastener in an installed condition;

FIG. **53** is a perspective view showing a twenty-ninth embodiment fastener;

FIG. **54** is a partially sectional side view showing the twenty-ninth embodiment fastener in an installed condition;

FIG. **55** is a back elevational view showing the twenty-ninth embodiment fastener of FIG. **53**;

FIG. **56** is an exploded sectional view showing a thirtieth embodiment fastener;

FIG. **57** is a bottom elevational view showing the thirtieth embodiment fastener;

FIG. **58** is a cross-sectional view, taken along line **58-58** of FIG. **56**, showing the thirtieth embodiment fastener;

FIG. **59** is an exploded cross-sectional view showing a thirty-first embodiment fastener;

FIG. **60** is a bottom elevational view showing the thirty-first embodiment fastener;

FIG. **61** is a cross-sectional view, taken along line **61-61** of FIG. **59**, showing the thirty-first embodiment fastener;

FIG. **62** is an exploded cross-sectional view showing a thirty-second embodiment fastener;

FIG. **63** is a fragmented cross-sectional view showing a thirty-third embodiment fastener;

FIG. **64** is a fragmented cross-sectional view showing a thirty-fourth embodiment fastener;

FIG. **65** is a side elevational view showing a washer employed in a thirty-fifth embodiment fastener;

FIG. **66** is a bottom elevational view showing the thirty-fifth embodiment fastener of FIG. **65**;

FIG. **67** is a cross-sectional view showing a thirty-sixth embodiment fastener;

FIG. **68** is a bottom elevational view showing the thirty-sixth embodiment fastener;

FIG. **69** is a top elevational view showing a thirty-seventh embodiment fastener;

FIG. **70** is a side elevational view showing a thirty-eighth embodiment fastener;

FIG. **71** is an enlarged elevational view showing the thirty-eighth embodiment fastener;

FIG. **72** is an elevational view, taken 90 degrees opposite that of FIG. **70**, showing the thirty-eighth embodiment fastener;

FIG. **73** is an enlarged elevational view, like that of FIG. **71**, showing a thirty-ninth embodiment fastener;

FIG. **74** is a cross-sectional view showing a fortieth embodiment fastener;

FIG. **75** is a fragmentary perspective view showing a forty-first embodiment fastener;

FIG. **76** is a fragmentary perspective view showing a forty-second embodiment fastener;

FIG. **77** is a fragmentary top elevational view with the lower half showing the forty-first embodiment fastener and the upper half showing the forty-second embodiment fastener;

FIG. **78** is a fragmentary perspective view showing a forty-third embodiment fastener;

FIG. **79** is a longitudinally sectional view showing the forty-third embodiment fastener;

FIG. **80** is perspective view showing a forty-fourth embodiment fastener;

FIG. **81** is a longitudinally sectional view showing the forty-fourth embodiment fastener;

FIG. **82** is an exploded perspective view showing a forty-fifth embodiment fastener;

FIG. **83** is an assembled perspective view showing the forty-fifth embodiment fastener in an intermediate installation position;

FIG. **84** is an assembled perspective view showing the forty-fifth embodiment fastener in a fully installed position;

FIG. **85** is a cross-sectional view, taken along line **85-85** of FIG. **82**, showing a variation of the forty-fifth embodiment fastener;

FIG. **86** is a perspective view showing a machine manufacturing the first embodiment fasteners, with an upper cover of the machine removed;

FIGS. **87**A-C are a series of diagrammatic side views showing the machine building up the first embodiment fasteners; and

FIG. **88** is a perspective view showing a machine manufacturing the twenty-eighth embodiment fasteners.

DETAILED DESCRIPTION

Referring to FIGS. **1** and **2**, a fastener **101** includes an elongated body or shaft **103**, a laterally enlarged head flange **105**, a laterally enlarged umbrella flange **107** and a workpiece-engaging member **109**. Workpiece-engaging member **109** further includes at least two, and more preferably at least four barb-like legs **111** which each have a relatively gently angled and tapered lead-in section **113** and a more abruptly angled retention section **115** intersecting at a peak **117**. These leg angles provide relatively easy insertion into a hole **119** of a sheet metal panel workpiece **121**, and more difficult extraction of the legs therefrom after complete fastening.

An interior trim panel workpiece **123** is attached to fastener **101** between flanges **105** and **107** by a localized dog house **125**. Umbrella flange **107** has flexible frusto-conical edges which are compressible to seal around hole **119** to deter a fluid, such as water or air, from passing therethrough. Longitudinally elongated slots **127** are located between each adjacent pair of legs **111** and a hollow open area **129** is centrally located between legs **111**. Opening **129** presents a die-locked condition if made with conventional die tooling. Furthermore, opening **129** allows for lateral compression of legs **111** toward a longitudinal centerline of the fastener during fastener installation and removal. This opening **129** advantageously reduces the weight and material cost of the part. Fastener **101** is preferably made by three-dimensionally printing an ultraviolet light curable polymer in a layering manner without dedicated tooling, as will be described in greater detail hereinafter.

FIGS. **3-5** show another embodiment fastener **151** which includes a male insertion component **153** and a female grommet component **156**. Male insertion component **153** includes a generally circular and enlarged head flange **155**, an enlarged and generally circular umbrella flange **157** and a longitudinally elongated and generally cylindrical shaft **159**. Multiple ridge formations **161** are spaced around shaft **159** to provide various grommet-engaging interlocks via inwardly projecting fingers **163** internally extending from a body **165** of grommet **155** when shaft **159** is fully inserted. Furthermore, a bulbous or laterally enlarged end **167** of male component **153** is located adjacent a distal end of shaft **159** so as to provide an intermediate retention feature to retain male component **153** within grommet **155** during shipping and initial fastener insertion into a hole **169** of a sheet metal automotive vehicle panel **171**. An interior trim panel **173** is retained around shaft **159** between flanges **155** and **157**.

When male component **153** is fully inserted between the positions of FIGS. **4** and **5**, bulbous end **167** is inserted through a longitudinally extending aperture **181** of grommet **155** while the adjacent portion of shaft **159** outwardly expands legs of body **165** so that grommet **155** is firmly secured within hole **169**. Additionally, a pair of O-ring seals **183** and **185** are integrally printed and attached to a circular flange **187** of grommet **155** on opposite sides thereof, so as to provide a resilient seal against the adjacent panels or flanges. Fastener **151** is preferably made by three-dimensionally printing a first polymeric material for the male component, either the same or a more flexible polymeric material for the grommet, and yet a different and more resilient polymeric material for the seals.

Another embodiment fastener **201** can be observed with reference to FIGS. **6** and **7**. This embodiment fastener includes a male insert component **203** and a mating female grommet component **205**. Male component **203** includes a laterally enlarged and circular head flange **207**, and a cylindrical and longitudinally elongated stem **209**. Enlarged barb-like legs **211** laterally extend from a distal end of stem **209** within an undercut open area **213** of grommet **205**. Furthermore, grommet **205** includes an upper cylindrical flange **215**, at least two barb-like legs **217** and inwardly extending triangular structures **219**. Male member **203** is pre-installed into grommet **205** after which legs **217** are inserted in a hole in a workpiece panel **221**. Male member **203** is thereafter fully inserted such that legs **211** are snap-fit engaged past triangular structures **219** so as to be firmly locked therein. This serves to retain a second workpiece **225** between head **207** and flange **215**.

Fastener **201** is preferably three-dimensionally printed from a polymeric material. More particularly, male member **203** is manufactured in an additive, building up and layering manner with legs **211** positioned inside of opening **213** of grommet **205**, at substantially the same time in a single machine cycle; this provides a pre-installed and pre-assembled condition without dedicated tooling or extra manual assembly. The components can be made of the same or different materials. Moreover, a small aperture is used in flange **215** through which stem **209** moves; an oversized slot or two piece flange is not required to allow assembly of the larger legs **211** as would otherwise be necessary for traditional processes.

FIGS. **8** and **9** illustrate another embodiment fastener **241**. Fastener **241** includes a partially circular workpiece-receptacle **243** which is accessible through opening **245** defined by a pair of outwardly diverging diagonal walls **247**. An elongated workpiece **249**, such as an electrical wire, fluid carrying tube or the like, is retained within receptacle **243**

and is insertable therein by snapping elongated workpiece **249** through opening **245** which outwardly expands receptacle **243**. Given the specific snap-fit entry geometries, the insertion forces for workpiece **249** entering receptacle **243** are less than extraction forces required for its removal.

A longitudinally elongated body or shaft **251** projects from receptacle **243**. A generally circular umbrella flange **253** laterally extends from shaft **251** and flexibly seals against a sheet metal workpiece panel **255**. A barb-like pair of legs **257** diagonally protrude from a distal end of shaft **251** and terminate at a lead-in point **259**. Legs are linearly pushed through a hole **261** of workpiece panel **255** by inwardly flexing distal ends the legs toward shaft **251**. Thereafter, legs naturally outwardly expand to their nominal position and deter, if not prevent, extraction of the legs back through hole **261**. Thus, fastener **241** serves to fasten elongated workpiece **249** to workpiece panel **255**. This can be used to secure electrical wires, air conditioning hoses, brake fluid hoses, fuel lines, or the like within an automotive vehicle.

Fastener **241** is preferably three-dimensionally printed from a light curable polymeric material. In one configuration, the entire, single piece fastener is made of a single polymeric material, but in other configurations, shaft **251** can be made from a rigid three-dimensionally printable polymer, legs **257** can be made from a more resilient three-dimensionally printable polymer, receptacle **243** can be made from a third and intermediate resilient three-dimensionally printable polymer but which also exhibits different tensile and hoop strengths, and the frusto-conical angled ends of umbrella flange **253** can be made from the most resilient three-dimensionally printable polymer. It is also noteworthy that the undercuts between ends of legs **257** adjacent shaft **251** and the facing cup-like underside of umbrella flange **253** creates a die lock condition with conventional injection molding, however, this is not of concern with the present three-dimensional printing process.

FIGS. **10** and **11** illustrate another embodiment fastener **275**. This fastener is similar to that of the embodiment illustrated in FIGS. **8** and **9**, however, an umbrella flange **277** further has multiple internal ribs **279** which are diagonally extending generally parallel to a frusto-conical skirt **281** at the edge of umbrella **277**. This enhances the watertight sealing of umbrella **277** against a workpiece panel **283** while also providing added rigidity to umbrella **277**. Moreover, ribs **279** have a generally frusto-conical shape coaxially aligned with a body or shaft **285**. Barb-like legs **287** create somewhat triangular cavities **289** facing cavity openings **291** between shaft **285** and ribs **279**. Three-dimensional printing of fastener **275** makes it relatively simple to manufacture these facing cavity conditions between legs **287** and ribs **279**, and also the collar-like receptacle **293**, since specialized tooling and matching dies are not required to manufacture such. The ribs can be the same or a different material from the umbrella which may also be the same or different materials from the remainder of the fastener.

Referring now to FIGS. **12** and **13**, a fastener **301** serves as an adjustable position nut. Fastener **301** includes a generally cylindrical and hollow body **303** with an internal bore **305** laterally extending therethrough. A longitudinally elongated shaft **307** projects from body **303** with barb-like legs **309** flexibly projecting adjacent a distal end thereof. Part of shaft **307** and legs **309** are inserted through a hole **311** in a sheet metal workpiece panel **313**. A laterally extending and generally circular umbrella flange **315** extends from shaft **307** with a large diameter pedestal **317** between umbrella **315** and body **303**. Umbrella flange **315** seals hole **311** when fully assembled.

A hollow rod **319** has a pair of enlarged ends **321** and **323** between which is a generally cylindrical middle **325**. Rod **319** can be laterally slid back and forth between ends **321** and **323** within bore **305** of body **303**. Furthermore, rod **319** can be rotated within body **303**. This provides an adjustment feature for a connected workpiece **327** attached to rod **319**. Fastener **301** is preferably three-dimensionally printed from an ultraviolet light curable polymer, although rod **319** is simultaneously built up in layers in the same machine cycle from either a different polymeric material or even a three-dimensionally printable metallic material. This simultaneous manufacturing of rod **319** and body **303** eliminates the need for post-manufacturing assembly and the otherwise required conventional need for a post-assembly attachment of a separate end piece **321** or **323**. In one configuration, body **303** can be three-dimensionally printed from a more lubricious polymer than the remainder of the fastener.

FIGS. **14** and **15** show another embodiment fastener **351** which acts like a dry-wall molly or scrivet. Fastener **351** has a grommet component including a longitudinally elongated body or shaft **353** having a pointed lead-in end **355** bordered by a conically tapered surface **357**. A generally circular head flange **359** laterally extends from an opposite end of shaft **353**. Additionally, shaft **353** has a generally cylindrical outside surface prior to complete fastening. A longitudinally elongated internal bore **361** is openly accessible from flange **359** for receiving a threaded screw **363** therein. Screw **363** has a longitudinally elongated threaded shaft **365** ending in a laterally enlarged head flange **367** with a tool interface therein. Such a tool interface is shown as a Phillips head screwdriver receptacle but may alternately be a straight-bladed screwdriver receptacle or other pattern. Bore **361** is preferably internally threaded but may alternately have a cylindrical inside surface if screw threads **365** are of a self-tapping nature.

Screw is either printed as part of or separately pre-assembled to shaft **353** prior to their insertion into a hole **369** of one or more workpiece panels **371**. Screw **363** is only partially installed in this initial workpiece insertion condition, as is shown in FIG. **14**. Thereafter, the user further tightens and inserts screw **363** fully into shaft **353** thereby pulling end **355** toward flange **359**. This causes the sidewall section of shaft **353** to outwardly bulge and expand in a folded manner thereby preventing extraction of fastener **351** from workpieces **371**. Fastener **351**, however, can be removed from workpieces **371** after screw **363** is mostly or fully disengaged from shaft **353**. Fastener **355** is three-dimensionally printed with or without screw **363**. As an alternate manufacturing approach for fastener **351**, the fastener can be manufactured from two different metallic materials, with the screw being a more durable and hard metallic material but with the grommet being a relatively softer and more pliable metallic material. Another alternate process employs direct laser metal sintering as will be described in greater detail hereinafter.

Another embodiment fastener **375** can be observed in FIGS. **16-18**. Fastener **375** includes a female grommet component **377** and a male screw component **379**. Grommet **377** includes a laterally enlarged and relatively thicker flange **381** and a longitudinally extending and generally cylindrical (in its nominal, pre-secured condition as shown in FIGS. **16** and **17**) shaft or body **383**. A longitudinally elongated bore **385** extends through flange **381** and body **383** and is accessible from the flange end thereof. A gener-

ally cylindrical and cup-shaped insert **387** is located in an end of bore **385** adjacent a closed end **389** of body **383**. Insert **387** has internal threads therein and optionally, a splined peripheral surface, while the remainder of bore **385** has a smooth inside surface. Grommet **377** is initially manufactured by three-dimensionally printing body **383** simultaneous with insert **387** wherein insert **387** is preferably made from a hard polymer while the remainder of body **383** is simultaneously built up from a more pliable polymer. Thus, the insert is integrally connected to grommet due to its manufacture. The lower surface of flange **381**, which contacts against one or more workpiece panels **391**, is preferably built up from a vibration dampening polymer which may be softer than that for the remainder of body **383** in another configuration of the present fastener.

FIG. **17** illustrates the fully inserted but not yet secured fastener condition wherein screw **379** has its threaded shaft **393** fully inserted but not tightened within bore **385** of grommet **377**. In this position, a few threads closest to a leading end **395** of screw **379** are enmeshed with a trailing end of insert **387**. This inserted but pre-secured condition can either be simultaneously manufactured through three-dimensional printing or alternately direct laser metal sintering, or separately assembled prior to insertion of the grommet into workpieces **391**, or less preferably, screw **379** can be inserted into grommet **377** after the grommet has been inserted into the workpieces. Screw **379** is either made of a metallic material (via three-dimensional printing or direct laser metal sintering, or through conventional cold forming processes, although some benefits will not be achieved). Alternately, the screw may be a polymeric material of greater rigidity, tensile strength and durability than the grommet. Finally, the user applies a tool to a head **397** of screw **379** whereby the threads adjacent end **395** of screw **379** fully engage essentially all of the internal threads of insert **387**. This causes a collapsing and folding of an intermediate section of body **383** in order to outwardly expand this section to securely grip workpieces **391** between it and flange **381**. This construction advantageously avoids the need to insert mold or post-assemble insert **387** within bore **385** through conventional processes, thereby avoiding this secondary and costly operation, and also avoiding the part-to-part manufacturing tolerance variations inherent with such conventional processes.

FIG. **19** shows yet another embodiment fastener **401** which is essentially the same as the prior embodiment but for an additional washer **403**. Washer **403** is integrally built up through three-dimensional printing as part of and simultaneously with the adjacent flange **405** of a grommet **407**. Washer **403**, however, is made of a much more rigid and hard polymeric or metallic material than is the adjacent grommet **407**. This provides a much firmer bearing surface for a head **409** of screw **411** when the screw is directly or indirectly tightened against grommet **407** during full fastening of fastener **401** to workpieces **413**. Washer **403** preferably has a circular top view shape, but may alternately have a polygonal or other peripheral shape.

Reference should now be made to FIG. **20**. A fastener **425** includes a screw **427** and grommet **429** much like that of the prior embodiment, however, body **431** of grommet **429** is manufactured with a pre-installed lateral bulge **433** to at least temporarily retain grommet **429** within workpieces **435**. Workpieces **435** are flat sheet metal panels, dry wall panels or wood panels, by way of example. Bulge **433** is either of a thickened wall cross-sectional area without any internal voids or undesired sink marks, or may optionally have a desired and predetermined (in shape, size and location) hollow space **437** such as that illustrated. Space **437** is manufactured as a continuous and fully enclosed hollow ring within the wall of body **431** at bulge **433** in order to provide a desired point of flexure during installation and/or longitudinal collapsing while being fully secured.

FIGS. **21** and **22** illustrate another embodiment fastener **451** having a male component **453** and a mating female component **455**. Male component **453** includes a laterally extending flange **455**, a generally longitudinally extending shaft **457** and a pair of snap-in wings or legs **459**. Shaft **457** has a + cross-sectional shape and each leg has an offset step **461** adjacent an end thereof which engages a workpiece panel **463**. A male insertion shaft **465**, having a generally arcuate periphery with a bulbous section **467**, longitudinally projects from flange **455** generally aligned with shaft **457**.

Female component **455** includes a laterally enlarged flange **471** from which longitudinally extends a box-like body defined by four side walls **473**. A hollow through cavity **475** is located within walls **473** to receive shaft **465** therein when installed. In the installation condition, bulbous section **467** is removably engaged by at least a pair of flexible snap-fit fingers **477** inwardly projecting from a pair of opposite side walls **473**. Additionally, outwardly diverging wings or legs **479** are provided on a pair of walls **473** so as to engage another workpiece **481** between an end thereof and flange **471**. Both components of fastener **451** are preferably three-dimensionally printed from polymeric materials which are ultraviolet light curable. In one configuration, fingers **477** and legs **479** are layered from more resilient and flexible polymeric materials than are shafts **457** and **465** of male component **453**, and also more resilient and flexible than walls **473** and flange **471** of female component **455**. Legs **479** may also be more rigid than fingers **477** using different polymers in the simultaneous printing process, for another configuration. This fastener embodiment provides a two-piece panel latch attachment.

Another embodiment fastener **481** is shown in FIG. **23**. This fastener **481** includes an enlarged flange or head **483** readily extending from a longitudinally elongated body or stem **485**. A resilient seal **486** is integrally printed on a backside of head **483**. A pair of barb-like snap-in legs **487** project from a distal end of shaft **485** and inwardly angle toward a narrower lead-in end **489**. A thin web **491** perpendicularly bridges between the majority of each leg **487** and the adjacent facing surface of shaft **485**. Fastener **481** is preferably three-dimensionally molded from an ultraviolet light curable, polymeric material with the webs **491** and seal **486** being of a more flexible and resilient polymer than the rest of the fastener. This web material will increase retention of the fastener in workpieces **493** by deterring, if not preventing, legs **487** from undesirably flexing out of the way or breaking when a linear tensile load is applied to head **483**. In other words, webs **491** act as tethers to the legs **487**. It is also noteworthy that the thickness at the intersection of shaft **485** to legs **487**, adjacent end **489**, is considerably greater than any of the adjacent fastener segments; however, using the present three-dimensional printing process, this does not create any undesired internal voids, sink marks, or processing induced shrinkage.

Referring to FIG. **24**, a fastener **501** acts as a swivel attachment between a pair elongated workpieces **503** such as fluid carrying tubes or wires. A generally circular workpiece receptacle **505** is located at each end of intermediate body **507**. Each receptacle **505** includes an open access **509** defined by a pair of diagonally diverging lead-in walls **511** which allow workpiece **503** to be easily snapped into the predominantly circular cavity inside of receptacle **505**.

Intermediate section **507** has a generally cylindrical peripheral shape with an entirely internally disposed interlocking swivel joint **513** therein. Swivel joint **513** includes an enlarged male head **515** projecting from a narrower shaft **517** which extends from a first half of intermediate section **507**. An exterior of head **515** is either cylindrical or spherical. Head **515** fits within the matching socket **519** of another half of intermediate section **507**. A cross-sectionally C-shaped undercut shoulder **521** peripherally surrounds shaft **517** and prevents head **515** from being linearly extracted from cavity **519**. Swivel joint **513** allows receptacle **515** on one side to be rotated about axis **523** relative to receptacle **505** on the opposite side of fastener **501**.

Fastener **501** is preferably made by three-dimensionally printing ultraviolet light curable polymeric material, but may alternately be made by direct laser metal sintering of a metallic material. The entire fastener is laid up as a single pre-assembled member during a single machine cycle such that assembly of multiple components after the fastener is created in the printing machine is not required. In this embodiment, one or two pixels of material may bridge between the mating male and female components of swivel joint **513** during the material buildup, however, these bridging areas are either mechanically severed during an initial swivel rotation or are chemically washed away by a solvent or other hardener wash or bath immediately after the laying up and initial curing during the machine cycle.

Turning to FIGS. **25**A and **25**B, another embodiment fastener **551** serves as a bumper to cushion an impact. Fastener **551** includes a laterally enlarged head **553** mounted on a longitudinally elongated shaft **555**. A frusto-conical attachment formation **557** surrounds shaft **555** and is spaced away from head **553** to allow a workpiece panel **559** to be received therebetween. Alternately, formation **557** can be replaced by threads on shaft **555**.

Head **553** includes a plurality of predetermined spaces or pockets **561** internally positioned therein which are completed surrounded by the adjacent polymeric material. Spaces **561** are shown as having a diamond cross-sectional shape but may alternately be a cylinder, cuboid, sphere or a variety of other pre-determined shapes. These allow for compression of head **553** during an impact from a contacting member such as a door, access panel, linkage, or other moveable member. A different material is used to provide an outer shell **563** surrounding at least a majority of head **553**. This different material **563** is preferably a polymeric material having a different characteristic than the remainder of head **553**. For example, shell **563** may have ultraviolet-fade resistance and aesthetically pleasing color while the remainder of the fastener has a less expensive and non-fade resistant polymeric material. Optionally, shell **563** may be of a softer and more resilient material than the remainder. The materials surrounding spaces **561** can also be of a more resilient material than shaft **555** and attachment formation **557**. The entire fastener **551** is preferably three-dimensionally printed as a single piece.

FIGS. **26** and **27** illustrate a fastener **575** which serves as an aesthetically pleasing cap over a screw **577** having a threaded shaft **579** and a laterally enlarged head **581**. Fastener **575** preferably has a frusto-conically tapering sidewall **583** ending at an enclosed end **585**. An opposite and cylindrically enlarged end **587** is openly accessible and includes receptacle cavity **589** therein. Multiple snap fingers **591** inwardly extend from cap **583** and engage the underside of head **581** from inserted screw **577**. It is noteworthy that a die-lock condition, using conventional dedicated tooling, would be present between fingers **591** and wall **583**. But with the present three-dimensionally printed or direct laser metal sintered processes, such a conventional problem is avoided.

Referring to FIGS. **28** and **29**, a fastener **601** is a hinge between two attached members such as a base workpiece **603** and a lid workpiece **605**. Fastener **601** has a generally cylindrical collar **605** with a through bore **607**. A body **609** upperwardly extends from collar **605** and is connected to lid workpiece **615** at an end thereof. Furthermore, an elongated metal rod **611** extends through bore **607**. Ends of rod **611** are attached to tabs **613** extending from base workpiece **603** of opposite ends of fastener **609**. Collar **605** operably rotates about rod **611** during opening motion of the lid relative to the base. Hinge-fastener **601** is preferably made by three-dimensionally printing an ultraviolet curable polymer, or alternately a three-dimensionally printable metal or direct laser metal sintered process, which is preferably later assembled onto rod **611**, or ultimately simultaneously built up with rod **611** in the same machine cycle.

Another embodiment fastener **651** is shown in FIGS. **30** and **31**. In this exemplary configuration, a hose clamp or wire clamp fastener is provided so as to fasten elongated workpieces **653**, such as hollow tubes or wires, to a sheet metal or other workpiece panel **655**. Fastener **651** has an upper component **657** and a lower component **659**, coupled together by a living hinge **661**, more particularly upper component **657** includes a rigid outer shell **663** and lower component **659** includes a rigid outer shell **665**, both preferably three-dimensionally printed from a rigid and durable polymer. Barb snap fits **667** and **669** disengagably mate with each other to connect segments **657** and **659** together when closed. The snap fits may optionally be integrally printed from a more flexible material than the remainder of the connected shells. A more resilient and compressible three-dimensionally printable polymer is used to create an integral receptacle **671** and **673** within upper and lower components **657** and **659**, respectively. When closed, these receptacles **671** and **673** together define generally circular workpiece receivers **675** therebetween to firmly engage the outside of tubular workpieces. Furthermore, a shaft **689** externally extends from lower component **659** and includes multiple legs or wings **691** diagonally projecting therefrom for engagement through a hole in workpiece **655**. Shaft **689** and wing **691** are integrally formed as part of lower component **659** although legs **691** may be three-dimensionally printed from a polymer that is more flexible than shaft **689** and the outer shell of lower component **659**. A seal **692** is printed integral with shell **665** but from a more resilient polymer.

Living hinge **661** is three-dimensionally printed from a very flexible yet durable polymer integral with components **657** and **659**. Each end of living hinge **661** is enlarged and coupled within a cavity of the associated component in a dove-tail manner so as to mechanically resist pull out from the more rigid adjacent shells. Again, the entire fastener **651** is built up as a single and integrated part in a generally simultaneous manner in a single machine cycle, yet has multiple different materials all with a different functioning of sections thereof.

FIG. **32** shows another configuration of a living hinge **695** in another embodiment fastener **697**. This living hinge has a somewhat circular middle section with outwardly offset ends for coupling to the shells, such that the overall shape resembles Ω. Such a shape encourages greater opening flexibility while also allowing for some misalignment of the mating components. Living hinge **695** on this exemplary embodiment, is also preferably three-dimensionally printed from an ultraviolet curable polymer.

FIGS. **33-35** show still another embodiment fastener **701**. Fastener **701** includes a cylindrical and hollow body or shaft. **703** within which extends multiple, spaced apart engagement fingers **705**. Openings **707** are preferably disposed adjacent each finger **705** to reduce part weight and material cost, but are alternately not present since three-dimensional printing does not require die access to create such fingers. Each finger is diagonally oriented toward a distal end **709** such that fastener **701** can be linearly pushed onto an externally threaded weld stud **711**, which is welded to a sheet metal workpiece panel **713**, such as an automotive vehicle body panel. A flange **715** laterally extends from body **703** to provide a contact surface for an adjacent workpiece, such as an electrically conductive eyelet, or an interior trim panel when clamped between flange **715** and workpiece panel **713** during full installation. The engagement between fingers **705** and threads of stud **711** serve to retain the fastener thereupon, but counter-rotation of fastener **701** will allow for removal of the fastener from the stud. As an alternate configuration, a hexagonal pattern can be externally provided on body **703** to allow for tool access whereby fastener **701** acts as a nut. Preferably, three-dimensional printing allows for fingers **705** to be made of a different polymeric or metallic material than the remainder of the fastener.

FIGS. **36** and **37** show a fastener **751** having an elongated body **753** three-dimensionally printed from an ultraviolet curable polymer. A bore **755** extends throughout the length of body **753** and is accessible via an arcuate slot **757** extending from one end to the other of body **753**. Multiple elongated workpieces **759**, such as wires, are bundled together and held by body **753**. When viewed from an end (see FIG. **37**), body **753** defines a closed shape. Moreover, such a wire bundling fastener can be used in a residential, industrial or laboratory building, in an aircraft, boat or automobile.

Fastener **751** is preferably built up by a three-dimensionally printing process with either a polymeric, or alternately, metallic material. Alternately, fastener **751** can be built up from a direct laser metal sintering process. Such processes synergistically create the arcuate shape gap **757** without expensive dedicated tooling and the associated traditional die lock problems. Furthermore, the specifically desired gap shapes and fastener dimensional sizes can be easily customized depending on the quantity of workpieces to be bundled and retained, by merely changing digital data on a computer controlling the machine, without the need to change tooling.

A weatherstrip fastener **775** is illustrated in FIGS. **38** and **39**. Fastener **775** includes an elongated and hollow weatherstrip sealing section **777** integrally attached to a curved flange **779**. Multiple stems **781** project from the bottom of flange **779** with each containing a pair of barb-like snap-in legs **783** from the distal end thereof. Fastener **775** is entirely created by three-dimensional printing of ultraviolet curable polymeric materials with stems **781** being of a rigid polymer exhibiting a greater tensile strength than the collapsible bulb of weatherstrip section **777**. Legs **783** and flange **779** require some resilience and may be optionally made of yet a different polymer than the remainder depending on the specific features needed for each application.

Another configuration of a weatherstrip fastener **791** can be observed in FIG. **40** which is essentially the same as that of FIGS. **38** and **39**, however, a flange **793** laterally extends from shaft **795** and is entirely encapsulated within flange **797**. This construction provides greater mechanical retention of the barbed stem within the weatherstrip section **799** to further deter undesired separation therebetween. Weatherstrip fastener **791** is preferably three-dimensionally printed of an ultraviolet cured, first polymer for the weatherstrip section and a second, different polymer for the panel fastening section.

Referring to FIGS. **41** and **42**, another embodiment of a fastener **801** employs a box nut component **803** and a threaded male component such as a screw **805**. Box nut component **803** has multiple walls defining a generally square or boxlike cross-sectional shape with a hollow center **809**. A base wall **811** has an internally threaded aperture **813**. Furthermore, an opposite pair of end walls **815** are configured in an overlapping manner. Diagonally extending legs **817** outwardly extend from side walls **807** so as to snap into a hole **819** and securely engage a backside surface of a workpiece panel **821** trapped between it and a laterally extending flange **823** co-planar with base wall **811**. At least side walls **807** and the majority of legs **817** are covered by a resilient and anti-rattling polymeric material layer **825** so as to deter vibration and rattling of box nut component **803** against workpiece **821**. Layer **825** extends across base wall **811** to create a seal against the workpieces.

Screw **805** includes a threaded shaft **829** projecting from a flange or head **831**. After initial insertion, screw **805** is engaged with a supplemental workpiece panel **827** when shaft **829** enmeshes with aperture **813**. Screw **805** is then fully inserted to the position of FIG. **42** such that an end of screw **805** pushes apart and outwardly expands side walls **807** so as to firmly secure legs **817** to workpiece **821**. Box nut **803** is preferably three-dimensionally printed from either a polymeric or metallic material substantially simultaneously in the same machine cycle with a more resilient outer layer **825**.

Referring to FIGS. **43** and **44**, a fastener **851** functions similarly to the immediately prior embodiment fastener, however the present fastener **851** has a generally triangular or pinched U-shaped nut component **853** defined by a base wall **855** with a threaded aperture **857** therein. Nut component **853** is further defined by a pair of inwardly angled side walls **859** and outwardly turned legs **861**. Legs **861** are each externally covered by a more resilient and anti-rattling layer **863** which operably engages a workpiece panel **865**. When a threaded screw component **867** is fully inserted into nut component **853**, male shaft **869** pushes apart side walls **859** and the associated snap-in retention legs **861** thereby securing fastener **851** to workpiece **865**. A head **871** of screw **867** traps an auxiliary workpiece panel **873** between it and base wall **855**. Screw **871** can be rotated to disengage it from nut component **853** thereby allowing removal of fastener **851** from workpieces **865** and **873**. Nut component **853** is preferably three-dimensionally printed from a polymeric, or alternately metallic material essentially simultaneously in the same machine cycle as the more resilient polymeric layer **863**.

FIG. **45** shows a cage nut fastener **901** including a base **903** having inwardly turned end walls **905** defining a cage-like cavity **907** therein with enlarged opening **911** between ends of walls **905**. A hole is in base **903**. Base **903** is preferably welded or otherwise attached to a sheet metal workpiece. A nut component **913** includes a laterally enlarged flange **915**, having a generally rectangular periphery moveable trapped by end walls **905**. An internally threaded barrel **917** longitudinally protrudes from flange **915** and operably receives an externally threaded shaft **919** of a threaded fastener, such as a bolt **921**. A seat belt anchor, or other workpiece is held to barrel **917** by bolt **921** when

inserted therein. Cage nut fastener **901** is preferably made by three-dimensionally printing a light curable polymeric or metallic material.

FIG. **46** shows a variation of cage nut fastener **901** wherein resilient and softer polymeric layers **923** and **925** are integrally printed with the more rigid and durable cage walls **903** and nut flange **915**, respectively. This variation provides an anti-rattling feature that also allows layers **923** and **925** to be compressed thereby creating a locking condition when bolt **919** is firmly tightened to barrel **917**.

Another embodiment fastener is shown in FIGS. **47** and **48**. This fastener **951** includes a female base or grommet component **953** and a male insert component **955**. Grommet component **953** has a laterally enlarged circular flange **957** from which extends a somewhat cylindrical (when in the installed but not fully secured condition shown in FIG. **47**) shaft **959**. A pair of moveable wings or legs **961** are flexibly attached to sides of body **959** adjacent a distal end **963** thereof. Each leg has an arcuate inner surface with an inwardly enlarged section **965**. Furthermore, an internally threaded and integral insert section **967** is located in body **959** adjacent end **963**.

Male insert component **955** includes a laterally enlarged flange or head **969**, with a generally circular periphery, and a longitudinally elongated shaft **971**. Shaft **971** has an externally threaded end **973** which enmeshes with threaded insert section **967** of body **959**. Moreover, a laterally enlarged bulbous formation **975** bordered by indented formations **977** are provided along an intermediate section of shaft **971** so as to allow legs **961** to inwardly collapse when in the nominal and pre-secured position (FIG. **47**). However, when screw **955** is torqued into full engagement and in a fully secured position as shown in FIG. **48**, cylindrical external surface **979** of body **959** outwardly pushes and locks legs **961** into their fastening position against the back side of at least one workpiece **981**. This provides for a blind attachment with fastener **951** being solely inserted from a single side of workpiece corresponding with flange **957**, with the user only having access to that side. Fastener **951** is preferably three-dimensionally printed from a polymeric material with the male and female components being entirely built up at essentially the same time in the same machine cycle and in a pre-assembled configuration. Less preferably, however, the components can be separately produced and then assembled, although many advantages will not be achieved.

FIGS. **49** and **50**, show a fastener **1001** which is a three-dimensionally printed or direct laser metal sintered nut **1003** including an internally threaded body **1005** and an annular and unthreaded shoulder **1007**. Additionally, multiple triangularly shaped darts or ribs **1009** are spaced apart from each other, yet radiate outwardly from shoulder **1007**. Ribs **1009** provide locating and anti-rotation features that are pressed into a softer workpiece **1011**, such as wood, a ductile metal, or a relatively soft plastic. A threaded bolt **1013** is enmeshed with the internal threads of nut **1003** to secure one or more workpieces **1011** therebetween. Nut **1003** may optionally be provided with a laterally extending flange or a separate washer can be employed. Fastener **1001** is preferably produced by a three-dimensional printing process or a direct laser metal sintering process, either from a light curable polymeric or metallic material, depending upon the specific application.

FIGS. **51** and **52** show a J-nut fastener **1025** which secures one or more workpiece panels **1027** therein. Fastener **1025** includes a generally U-shaped body **1029** consisting of a pair of essentially parallel side walls **1031** and **1033**, connected by a bridging end wall **1035**. In one configuration, all of the wall intersections and corners have sharp angular intersections **1037**, without fillets or radii, since rounded intersections are not required with the preferred manufacturing processes as no folding or bending occurs. Additionally, a diagonally diverged lead-in wall **1039** extends from an open end of side wall **1033** so as to assist in entry of workpieces **1027** between walls **1031** and **1033**.

An annular nut **1041**, having internal threads **1043**, is integrally attached to side wall **1033** as a single piece. A wall thickness of nut **1041** is at least twice that of wall **1033**. An unthreaded aperture **1045** is aligned with nut **1041** so as to provide access of an externally threaded shaft **1047** of a bolt **1049** extending through hole **1045**, openings in workpieces **1027** and enmeshing with threads **1043** of nut **1041**. Fastener **1025** is preferably manufactured through built up, light curable polymeric or metallic materials using three-dimensional printing or laser metal sintering processes. In one variation, nut **1041** is made of a different and more rigid material, exhibiting a greater hoop strength hardness, and thread durability, then the remainder of the fastener which can have more flexible and ductile characteristics to allow for variations in workpiece thickness.

FIGS. **53** through **55** illustrate another fastener **1051** which is a wrap-around-type latch or, alternately, an electrical box terminal. Fastener **1051** includes a longitudinally elongated and flat body **1053** with offset flanges or pockets **1055** and **1057** extending therefrom with openly accessible channels **1059** and **1061** created therebetween. Resilient barb-like legs **1063** diagonally protrude in channel **1059** which serve to retain a male workpiece **1065** (or electrical blade) inserted into channel **1059**. Pointed edges **1067** project from ends of pocket **1057** to secure a perpendicularly inserted male workpiece **1069** between it and an end wall **1071** of pocket **1055**. In one configuration, a band **1073** wraps around a backside of body **1053** to provide additional stiffness across this flat back surface and to allow for flexible inward and outward movement of pocket **1057** relative to body **1053**; band **1073** further prevents over-flexure of the connecting end wall **1075** thereof. In an alternate configuration, band **1073** is removed and bridging side walls **1077** are instead directly connected to adjacent edges of body **1053**. Fastener **1051** is ideally suited for securing together ninety degree offset wall joints such as can be used in toys, automotive vehicle panels, aircraft or boats.

Fastener **1051** is preferably three-dimensionally printed from a polymeric or metallic material, or may alternately be direct metal laser sintered from a metallic material. The present fastener **1051** advantageously eliminates the traditional need for expensive progressive dies otherwise required to fold over sheet metal. Such conventional folds require radii at all folds and often double-over sheet material, which wastes material, weight and space. The present processes can further synergistically have sharp surface intersections, only require single material thicknesses, do not require dedicated specialized tooling and do not exhibit conventional spring-back problems which lead to undesired part-to-part tolerance variations for traditional folded parts. The present formations may have varying thicknesses but do not cause undesired, internal shrinkage voids or depressed sink marks due to use of the present manufacturing process, as will be discussed in greater detail hereinafter.

Referring to FIGS. **56-58**, a further embodiment fastener **1101** is a nut. The nut includes a body **1103** and a longitudinally aligned through bore having internal threads **1105** along a majority surface thereof. The nut further includes shoulder segments **1107** which are circumferentially sepa-

rated from each other by relief slots **1109**. A peripheral surface **1111** has a generally polygonal shape for receiving a wrench or other tool.

A threaded fastener component, more particularly a bolt **1113**, has a polygonal head **1115** for engagement by a tool, a laterally enlarged flange **1117**, and an externally threaded shaft **1119**. Shaft **1119** of bolt **1113** is operably inserted by rotation into the bore of nut **1101** wherein the constricted diameter of shoulders **1107** provide a locking feature interfering with an end portion of threaded shaft **119**. Alternately, if shaft **119** is unthreaded, shoulders **1107** may provide a thread cutting function although the shoulders may need to be positioned at a different location within nut **1101**. Nut **1101** is preferably made by three-dimensional printing of a metallic or polymeric material, or is made by direct laser metal sintering of a metallic material. With three-dimensional printing, the nut can advantageously be provided with a harder or softer material at shoulders **1107** as compared to body **1103** in an integrated and simultaneously built up manner.

With reference to FIGS. **59-61**, another embodiment fastener **1125** is also a nut having a body **1127**, internal threads **1129** in a through bore, and raised shoulders **1131**. Shoulders **1131** are separated from each other by radial slots **1133** which are located between each pair of adjacent shoulders **1131**. Each shoulder has a tapered or angularly offset tooth **1135** on an inward end thereof which operably engages external threads on a shaft **1137** of a bolt **1139** inserted therein. The smaller diameter created by shoulders **1131**, as compared to threads **1129**, provides a localized thread locking feature between bolt **1139** and nut **1125** when engaged. Nut **1125** is preferably built up by three-dimensional printing of an ultraviolet light curable/fusable metallic or polymeric material, or by direct laser metal sintering of a light curable metallic material. This advantageously provides extremely precise and sharply angled thread peaks and valleys simultaneously with the building up of the nut body.

FIG. **62** illustrates a fastener **1151** including a cap nut **1153** and a washer **1155**. Cap nut **1153** includes a body **1157** having a bore with internally disposed threads **1159**. A domed or otherwise shaped cap **1161** is located above one open end of the through bore and defines an open area **1163** between body **1157** and dome **1161**. Longitudinally and/or laterally extending internal ribs **1165** and **1167**, respectively, are optionally provided within space **1163** to strengthen cap nut **1153**. An exterior periphery of body **1157** has a polygonal shape, such as a generally hexagonal shape **1169**, to receive wrench or other tool. Additionally, a laterally extending flange **1171** projects from a bottom of body **1157**.

Washer **1155** has a stepped shape with a lower bearing wall **1173** of an annular shape, a connecting wall **1175** and an upper engagement wall **1177**. Engaging wall **1177** fits within a receptacle **1179** internally disposed in body **1157**. Engagement wall **1177** and the associated receptacle **1179** may either have bottom view annular shapes or may be localized fingers and cavities which are circumferentially spaced from each other. Receptacle **1179** is laterally and/or longitudinally larger than engagement wall **1177** so as to allow for some limited relative movement therebetween to account for surface variations in a workpiece attached between a bolt **1181** and bearing wall **1173** of washer **1155**. Washer **1155** extends slightly below a bottom of body **1157**.

Cap nut **1151** and washer **1155** are preferably made by three-dimensional printing of an ultraviolet curable metallic or polymeric material, or may be direct laser metal sintered from a light curable/fusible material. Washer **1155** is essentially simultaneously layered as part of cap nut **1153** and connected thereto during the laying up steps by a at least one pixel of bridging material which is later removed by a mechanical breakage or washing away of the bridging material which is different and dissolvable. Washer **1155** may be the same or a different material than cap nut **1153**.

FIG. **63** shows another embodiment fastener **1201** which employs a cap nut **1203** the same as the prior embodiment, however, a washer **1205** has a generally tapered or frusto-conical skirt **1207** for its bearing wall. Skirt **1207** is attached to walls **1209** and **1211** located in an oversized receptacle **1213** like that of the prior embodiment. This fastener **1201** preferably has a more resilient three-dimensionally printable or laser metal sintered material than does cap nut **1203** which is a harder material.

FIG. **64** illustrates a fastener **1223** employing a cap nut **1227** the same as that of FIG. **62**. A washer **1229**, however, has a bearing wall **1231** of a wavy or undulating pattern connected to an engagement wall **1233** received within an oversized receptacle **1235** of cap nut **1227**. A central passage **1237** of washer **1229** can have a smaller diameter than but is coaxially aligned with an internally threaded bore **1239** of cap nut **1227**. Passage **1237** initially holds a bolt in an intermediate installation condition for shipping. Bearing wall **1231** essentially covers at least the majority, if not all, of the bottom surface of cap nut **1227**. It is envisioned that washer **1229** is three-dimensionally printed or metal sintered from a more resilient and compressible material than the remainder of the fastener such that the undulations can be somewhat flattened to create and maintain a clamp load for anti-loosening of the fastener.

FIGS. **65** and **66** illustrate another embodiment fastener **1251** wherein a cap nut is the same as the prior FIG. **62**. A bearing wall **1253** of a washer **1255**, however, has at least two diagonally angled locking formations to deter undesired disengagement of a fastened bolt or workpiece. Bearing wall **1253** has a somewhat circular bottom view pattern surrounding a central opening **1257**. Each locking section of wall **1253** is angled to easily rotate the mating bolt in an installation direction but resist reverse rotation. It is envisioned that washer **1253** is three-dimensionally printed or metal sintered from a more resilient material than the remainder of the cap nut.

Referring to FIGS. **67** and **68**, another variation fastener **1275** includes a cap nut **1277** like that of FIG. **62**. Fastener **1275** additionally has a washer **1279** that essentially covers a bottom of cap nut **1277** and has a central opening **1281** coaxially aligned with internally threaded bore **1283** and a body **1285** of cap nut **1277**. Furthermore, this washer **1279** has an inwardly and frusto-conically tapered skirt **1287** which angles toward body **1285** and away from adjacent workpiece. Multiple radial slots **1289** separate sections of skirt **1287**. This washer is three-dimensionally printed or metal sintered as part of the cap nut.

FIG. **69** shows another variant of a fastener **1301**. This fastener can be any of the fasteners disclosed herein, but in this specific example, is shown as a head **1303** of a threaded fastener. Fastener **1301** has a set of markings or indicia **1305** integrally created with a remainder of the fastener in the manufacturing cycle at essentially the same time. In this example, the indicia constitutes a stylized logo or pattern, the manufacturer's name, and a part number and/or date. Such indicia may be raised or depressed relative to the adjacent parts surface and is preferably of a different color than the adjacent surface. This is ideally suited for three-dimensional printing of an ultraviolet curable polymeric, or alternatively metallic, material where a first color material is essentially simultaneously laid up adjacent second or third

different color materials in the same laser printing head pass. This avoids the extra cost, tolerance variations and durability concerns with traditional pad printing, co-injection molding or other such traditional processes, all requiring extra steps and specialized tooling. Pixel-by-pixel colored material differences can be placed on a curved or functional surface with ease and durability.

FIGS. **70-72** illustrate another embodiment fastener **1325**. In this embodiment, fastener **1325** is a bolt or screw **1327** including a polygonal tool-receiving head **1329**, a laterally enlarged flange **1331** and an externally threaded body or shaft **1335**. Shaft **1335** has peaks **1337** and valleys **1339** defining the threads which are very precisely constructed with sharply angled intersections **1341**, and additional localized formations **1343** to provide a locking structure. These features also apply to a mating nut **1347**. The localized locking formations **1343** provide a raised exterior surface protruding slightly above the nominal thread surface thereat such that when the mating threads are enmeshed therewith, they dig in and deform the formation **1343** thereby creating a locking or anti-rotational function to prevent undesired disengagement. The bolt and nut are preferably three-dimensionally printed from a hard and durable polymeric or metallic material, or they may be direct laser metal sintered, but the locking formation **1343** is essentially simultaneously built up from a light curable/fusable and more ductile material.

FIG. **73** shows an alternate variation fastener **1351** having a very precise thread pattern for bolt **1353** and mating nut **1355**. In this configuration, repeating sharply intersecting valleys **1357** and peaks **1359** are created on each component. A diagonal intermediate surface **1361** is additionally provided on nut **1355** which interferes with peak **1359** thereby creating a locking and anti-rotational feature. This intermediate interference can be of a localized construction or may be consistently applied to each thread throughout the length of the nut. It is also envisioned that the nut and bolt thread patterns can be reversed depending upon the application. Such a precise thread pattern is ideally suited for three-dimensional printing or metal sintering since there are no part-to-part tolerance variations otherwise occurring due to traditional molding shrinkage, coldheading tool wear or the like.

With reference to FIG. **74**, a fastener **1351** has a body **1353**, a through bore **1355** and a pair of workpiece-receiving receptacles **1357**. Receptacles have a predominantly circular shape and are accessible by elongated workpieces **1359** through an access channel **1361** defined by compressible or flexible fingers **1363**. Thus, workpieces **1359** are snap-fit into receptacles **1357** with easier effort than is required to remove them back through access channel **1361**.

Through bore **1355** receives a weld stud **1365** attached to a workpiece panel **1367**. A nut or other fastener is thereafter attached to an end of stud **1365** after insertion of fastener **1351** thereon. Exemplary elongated workpieces **1359** include wires, tubes or the like. Internal spaces **1369**, of a predetermined shape and position, are located within body **1353** to allow for compression of fingers **1363**, lower weight of fastener **1351**, a reduction in material costs and increased part flexure. These spaces may be elongated, spherical, rectangular or have varying shapes and locations depending upon the part flexure desired at the adjacent location. Creation of such predetermined and desirable spaces is ideally suited for three-dimensional printing or metal sintering.

Referring to FIGS. **75** and **77**, another embodiment fastener **1371** employs an enlarged and generally circular head **1373** from which extends a longitudinally elongated shaft **1375**. Multiple legs or wings **1377** circumferentially project in an arcuate manner from adjacent outboard edges **1379** of shaft **1375**. At least a majority of each wing **1377** has a distal and longitudinally elongated edge **1381** which is spaced from a facing edge of the adjacent wing of the same side of shaft **1375**. An undercut and hollow cavity **1383** is created on each side and defined between an inwardly facing surface **1385** of each wing **1377** and an adjacent outwardly facing surface **1387** of shaft **1375**. Each cavity **1383** is openly accessible from a top edge of each wing and from the elongated gap between edges **1381**. The wings are each connected together where they intersect shaft **1375** adjacent a tapered and generally pointy distal end **1389**. The wing configuration allows for inward flexure of these bifurcated workpiece-engaging formations **1377** as the body of fastener **1371** is linearly pushed into a workpiece hole **1391**. After the wings are fully inserted, they will outwardly expand to their nominal condition shown as **1377'** wherein a workpiece panel is secured between an upper edge of wings **1377** and a bottom surface of head **1373**. Fastener **1371** is three-dimensionally printed from a light, curable polymeric material which allows for easy creation of wings **1377** and cavities **1383** without complicated and expensive, dedicated tooling.

With references to FIGS. **76** and **77**, a further embodiment fastener **1393** is the same as the preceding embodiment, however, the wing configuration is different. A shaft **1395** longitudinally extends from a bottom surface of a laterally enlarged and circular head **1397**. A pair of wings **1399** each arcuately extend from a single outboard edge **1401** of shaft **1395**. A distal edge **1403** of each wing **1399** is spaced from the opposite outboard edge of shaft **1395** such that a longitudinally elongated gap is defined therebetween. An undercut and hollow cavity is similarly defined between each interior surface of wing **1399** and the upward facing surface of shaft **1395** thereby allowing inward flexure of wings **1399** during workpiece insertion. This fastener is also three-dimensionally printed from a light curable polymer.

FIGS. **78** and **79** illustrate another embodiment fastener **1411** used to secure a front bumper skin to a front face of an automotive vehicle. A bushing **1413** includes an external spiral thread **1415** which is engageable with an internal spiral thread **1417** of a nut **1419**. This threaded bushing-to-nut engagement provides assembly adjustment to compensate for varying gaps between workpieces **1421** and **1423**. A smoothly undulating, inner sleeve **1425** contacts against external threads **1427** of a longitudinally elongated screw **1429** extending therethrough. Threads **1427** enmesh with an internally threaded channel **1431** of nut **1419**. The construction and function of this fastener is essentially like that disclosed in U.S. Patent Publication No. 2009/0190993 entitled "Device for Fastening an Add-On Part and a Support Part at a Distance From Each Other" which was invented by De Gelis, and is incorporated by reference herein. In contrast, however, present fastener **1411** is three-dimensionally printed from the same or different, light curable, polymeric materials, depending upon the specific application.

Furthermore, it is also envisioned that bushing **1413** is three-dimensionally printed at least partially inserted in nut **1419** during the manufacturing cycle, with a few pixels of a dissolvable printed material bridging therebetween such that no post-manufacturing assembly is needed between these two components. This partially installed manufacturing configuration is further advantageous by preventing thread misalignment as would potentially occur with conventional components. It is alternately envisioned, however, that these

components can be separately printed and later assembled, but such a configuration will not fully take advantage of the cost and labor savings.

FIGS. **80** and **81** show yet another embodiment fastener **1441**. This fastener is similar to that of the immediately preceding embodiment, however, a more aggressive and tightly spiraling external thread **1443** is on a periphery of a bushing **1445**. Similarly, the same aggressive and tightly spiraling thread **1447** is located on an internal surface of a nut **1449**. Additionally, an internal thread **1451** is located within a sleeve **1453** coaxially positioned inside bushing **1445**, within which is engaged a longitudinally elongated screw **1455**. Fastener **1441** allows for adjustment between the secured bumper workpieces **1457** and **1459**. A traditional injection molded device is disclosed in U.S. Patent Publication No. 2009/0263180 entitled "Device for Securing an Add-On and a Support in Spaced-Apart Relation" which was invented by De Gelis, and is incorporated by reference herein. In contrast, present fastener **1441** is three-dimensionally printed from the same or different, light curably polymers, preferably in a pre-assembled condition or, alternately in a separate condition requiring post-manufacturing assembly. The three-dimensionally printed present fastener advantageously avoids the high cost, complexity and time consuming need for dedicated tooling to create the components thereof, especially to create thread **1451** internal to sleeve **1453**.

A quarter-turn fastener assembly **1471** is shown in FIGS. **82-84**. Fastener assembly **1471** includes a clip **1473** and a base **1475**. A workpiece, such as a vehicular sun visor, assist handle, or trunk load floor, or a manhole cover, wall bracket or the like, is secured to an adjacent workpiece panel between the clip and base when fully installed.

Clip **1473** includes at least two, and more preferably four, walls **1477** upstanding from a central head **1479** with an aperture **1481** therein. A tapered lead-in section **1483** inwardly angles from each wall **1477**. Furthermore, a snap-in leg **1485** includes a pair of inwardly tapered segments intersecting at an intermediate apex **1487** to snap into and then firmly engage a workpiece panel **1491** (see FIG. **85**). Multiple feet **1493** laterally and downwardly extend from edges of head **1479** to abut against a second workpiece panel. Moreover, a pair of offset angled and diagonally extending ramps **1495**, with a flat distal end thereon, oppositely project from head **1479** on either side of aperture **1481**. Additional flanges **1497** inwardly project between pairs of walls **1477**.

Base **1475** has an aesthetically pleasing outer surface **1492** and a back side surface **1494**. A central shaft **1496** longitudinally projects from surface **1494** and terminates in a laterally enlarged head **1498**.

FIG. **83** illustrates base **1475** in an initial position linearly inserted into an opening in one of the workpieces. In this position, tabs **1497** trap and abut against an upper surface of head **1498**. Thereafter, the installer rotates clip **1473** relative to base **1475** approximately 90 degrees such that the bottom side of head **1498** rides along the diagonally angled section of each ramp **1495** thereby compressing the ramps toward head **1479**. Thereafter, fastener assembly **1471** is linearly snapped into another workpiece panel via engagement of legs **1485**. One such traditional construction is disclosed in U.S. Patent Publication No. 2010/0146747 entitled "Clip and Method for Using the Clip" which was invented by Reznar et al, and is incorporated by reference herein. In contrast to this traditional clip, however, the present fastener assembly is preferably three-dimensionally printed from at least two different polymeric and/or metallic materials, or alternately, additively layered using direct laser metal sintering. The present fastener assembly advantageously does not require expensive and complicated dedicated injection molding dies and progressive stamping die.

FIG. **85** illustrates a variation of this quarter-turn fastener wherein a clip **1499** does not require traditional apertures in solid and unperforated upstanding walls **1500**, and does not require complex and unnecessary inwardly bent and folded segments to support ramps **1502** which instead, directly project from one or more vertical walls upstanding from the head inboard of the peripheral edges thereof. Furthermore, die locked cavities **1504** between a multiple angled workpiece engaging leg **1506** and the facing wall **1500**, as well as entirely enclosed predetermined spaces **1508**, can be easily created by additively depositing, three-dimensionally printable polymeric or sintered metal materials. A compression stop **1510** can be deposited to inwardly extend from a middle area of ramp **1502**. Therefore, the present processing provides noteworthy synergistic benefits not found in traditional injection molding and stamping methods.

The preferred manufacturing machine and process are shown in FIGS. **86-87**C. A three-dimensional printing machine **1501** includes a stationary support surface **1503** upon which a set of identical fasteners **101** are created. Machine **1501** further includes at least one ink jet printer head **1505**, and preferably eight heads, which traverse side to side along one or more gantry rails **1507** by an electric motor or other automatically controlled actuators. The gantry rail also moves fore and aft above support surface **1503** along outboard tracks **1509**, driven by an electric motor or other automatically controlled actuator. At least two storage tanks **1511** or removable cartridges are connected to head **1505** via supply hoses **1513** in order to feed the same or different polymeric materials **1515** contained within each tank **1511** to multiple ink jet printer openings **1517** in head **1505**. Openings **1517** may constitute an array of 10×10 or even 100×100 nozzles, and more preferably 96 nozzles, arranged in a linear array such that multiple material flows are simultaneously emitted during a single head pass. The material is preferably an ultraviolet light-curable photopolymer in the form of a powder and water mixture. Alternately, a spool containing an elongated and flexible string or filament of the polymeric material can be fed to the head, melted and emitted onto the support surface as a layered and continuous string.

A computer controller **1519**, having an input keyboard **1521**, an output display screen **1523**, and a microprocessor, is connected to a central processing unit **1525** of machine **1501** to control the feed of material from tanks **1511** and the actuator movement of head **1505** relative to support surface **1503**. The machine user downloads a CAD file containing a design of the fastener into non-transient computer memory, such as RAM, ROM, a hard drive or removeable storage, associated with computer controller **1519**. The user then uses software instructions stored in the memory to digitally lay out the desired quantity of the fasteners onto support surface **1503** and position the fasteners in a manufacturing orientation, while adding any supports **1527** or pixel bridges to the design which are later removed after the manufacturing. The user also inputs the material(s) to be used in the manufacturing, whereafter the microprocessor in computer controller **1519** and CPU **1525** runs the software to cause head **1505** to begin its movement and material deposition in order to create the set of fasteners.

During the first pass of head **1505**, ink jet printing openings **1517** emit streams of polymeric material **1515** and lay down a first layer, constituting a bottom external surface

with a first transverse pass of head **1505**; for the first preferred embodiment fastener, the bottom external surface as shown is an outside surface of the thickest section which is at the fastener head. This first pass lays down a material thickness of approximately 0.1-1.0 mm of fastener. As the machine head continues in its transverse path, it will also lay down the same exact material layer for each adjacent fastener being manufactured in the same manufacturing cycle. Alternately, if the array of openings is large enough, spread out or contained on multiple heads, then multiple heads can be simultaneously deposited. One or more ultraviolet lights **1541** are attached to head **1505** which serve to emit light onto the layered material immediately after its deposition which binds together and cures the layer of material deposited. After the first layer has been deposited for each of the multiple fasteners, head **1505** then emits a second layer of polymeric material **1515** upon the already deposited first layer which is then bound to the first layer when cured by lights **1541**. This layering and curing is repeated many times, for example, with more than fifty layers or head passes, until the fastener is fully created.

Material is deposited where computer controller **219** informs head that a wall or other polymeric formation is desired but head will not deposit any material where a bore or other open area is present in the CAD drawing of the fastener. The polymeric material is stacked in many layers thereby creating the entire fastener as an integral and single piece part in an ambient and non-pressurized gaseous, particularly air, environment inside an enclosure of machine **1501**. In other words, the fasteners are all surrounded by air except for the first layer which contacts support surface **1503**, during the entire manufacturing cycle. As used herein, manufacturing or machine "cycle" refers to the time period from which the head begins depositing the first layer of material until when the head deposits the final layer of material for the completed part and is cured in the machine. After the machine cycle is complete, the user manually removes the manufactured fasteners from support surface **1503**, such as by use of a putty knife or other removal tool. At least forty fasteners are made in a single machine cycle, which is preferably less than ninety minutes. In one optional step, each removed fastener is dipped into a hardener, solvent or final curing solution, which also serves to dissolve any supports or bridges, especially when they are made of a solvent-dissolvable material, different from the primary material defining walls of the fastener.

Returning to the manufacture of the embodiment fastener of FIG. **11**, the present three-dimensional printing advantageously builds up ribs **279** and skirt **281** of umbrella **277** as a flexible seal essentially simultaneously in the same pass as the adjacent shaft **285** is built up. The umbrella seal is made of a more flexible, UV curable polymer (for one exemplary configuration, DM 9870 material) as compared to the adjacent rigid shaft (for one exemplary configuration, Verogray material). It is noteworthy that the seal is integrally connected and made as a single part with the remainder of the fastener such that post-manufacturing assembly is not required. The seal can also have a dove tail engagement within an undercut of the adjacent shaft thereby providing an additional mechanical connection to provide extra durability.

Exemplary generic three-dimensional printing machines and materials that can be employed to make fastener as specified herein are disclosed in U.S. Patent Publication Nos. 2010/0217429 entitled "Rapid Production Apparatus" which published to Kritchman et al. on Aug. 26, 2010, 2011/0074065 entitled "Ribbon Liquefier for Use in Extrusion-Based Digital Manufacturing Systems" which published to Batchelder et al. on Mar. 31, 2011, and U.S. Pat. No. 7,851,122 entitled "Compositions and Methods for Use in Three Dimensional Model Printing" which issued to Napadensky on Dec. 14, 2010, U.S. Pat. No. 7,369,915 entitled "Device, System and Method for Accurate Printing of Three Dimensional Objects" which issued to Kritchman et al. on May 6, 2008, and U.S. Pat. No. 5,866,058 entitled "Method for Rapid Prototyping of Solid Models" which issued to Batchelder et al. on Feb. 2, 1999. These patent publications and patents are all incorporated by reference herein. A presently preferred machine is the Connex 500 model from Objet Geometries Inc. but may less preferably be a Dimension Elite fused deposition modeling machine from Stratasys, Inc. Nevertheless, it should be appreciated that manufacturing the fasteners disclosed herein by the present three-dimensional printing steps also disclosed herein is a significant leap in technology.

A direct metal laser sintering machine **1601** is shown in FIG. **88**. A programmable computer controller **1603** controls vertical and horizontal actuators **1605**, a laser light source **1607** and a mirror actuator **1609** in accordance with operating software instructions stored within the computer's memory and CAD data for one or more fasteners to be manufactured. Metallic powder **1611** is contained within the chamber **1613** which is moveable in a three-dimensional manner by actuators **1605**. A reflective mirror **1615** moves a laser light beam **1617** emitted from laser **1607** such that beam **1617** interacts with desired points on the chamber full of metal powder **1611**. It should also be appreciated that various optics can separate beam **1617** into multiple sub-emissions so as to interact with multiple points of metal powder **1611** at the same time. This laser-to-powder interaction causes a light curing, or more precisely fusing, of the powder particles at that location such that fastener **1025** is built up in a layer-by-layer and additive manner as a single integral part until the entire fastener is thereby created. The computer can be programmed to essentially simultaneously make multiples of the identical part within the same machine cycle. The fastener is not otherwise contained within specialized and dedicated tooling whereby the direct metal laser sintering machine can make any of the fasteners disclosed herein with only programming changes.

One suitable machine is the EOSINT M 280 Model which can be obtained from EOS GmbH of Munich. Exemplary generic machines, not known to produce any fasteners, are disclosed in U.S. Pat. No. 5,658,412 entitled "Method and Apparatus for Producing a Three-Dimensional Object" which issued to Retallick et al. on Aug. 19, 1997; U.S. Patent Publication No. 2009/0017219 entitled "Layer Application Device for an Electrostatic Layer Application of a Building Material in Powder Form and Device and Method for Manufacturing a Three-Dimensional Object" which published to Paasche et al. on Jan. 15, 2009; and U.S. Patent Publication No. 2009/0045553 entitled "Device and Method for a Layerwise Manufacturing of a Three-Dimensional Object from a Building Material in Powder Form" which published to Weidinger et al. on Feb. 19, 2009, all of which are incorporated by reference herein.

While various embodiments have been disclosed herein, and it should be appreciated that other variations may be employed. For example, pre-assembled or separately printed washers, seals or gaskets can be simultaneously made by the layering and building up process of three-dimensional printing as discussed herein with any of the fastener embodiments. It should also be realized that while pre-assembled manufacturing is advantageous, the components may be

separately manufactured and assembled although many of the present advantages will not be achieved. Additionally, predetermined and entirely enclosed hollow spaces can be designed and manufactured inside thickened walls of any of the present fasteners in order to save material costs and weight. Any of the fastener functions, features and segments thereof may be interchanged with any of the other fasteners disclosed hereinabove, although certain benefits may not be realized. Nevertheless, such changes, modifications or variations are not to be regarded as a departure from the spirit and scope of the present invention.

The invention claimed is:

1. A method of making a fastener, the method comprising:
(a) creating a first layer of material to define a first section of the fastener;
(b) emitting light onto the first layer after the prior step to cure, harden or bond the layer;
(c) creating a second layer of the material upon the first layer to define a second section of the fastener after the prior step;
(d) emitting light onto the second layer after the prior step to cure, harden or bond the second layer;
(e) creating at least a third layer of the material upon the second layer to define at least a third section of the fastener after the prior step;
(f) emitting light onto the third layer after the prior step to cure, harden or bond the third layer;
(g) creating a flexible rotatable hinge section from the material which is a printable polymeric material;
(h) depositing a second and different polymeric material integrally connected to the printable polymeric material during the same machine head pass above the fastener being created;
(i) removing the finished fastener from a machine which performs the creating and emitting steps, with the layers all being integrally connected to their adjacent layers; and
(j) the finished fastener being functional and made by the machine in less than ninety minutes.

2. The method of claim **1**, further comprising depositing the first layer of the material from a printing head onto a support surface of the machine in an ambient and unpressurized air environment.

3. The method of claim **1**, wherein the light is ultraviolet light which is immediately passed over each layer of the fastener after it is deposited.

4. The method of claim **1**, further comprising making a shaft within the hinge, by at least one of the creating steps.

5. The method of claim **1**, further comprising making the flexible section of the fastener by creating another layer of a different material, the first section being of a more rigid material than the flexible section.

6. A method of making a fastener, the method comprising:
(a) depositing a layer of material onto a support surface, the layer defining an outer surface of the fastener;
(b) depositing subsequent layers of the material upon each prior layer until the fastener is completely created;
(c) creating the fastener to comprise a body and a rotatable hinge coupled to the body made of the material, as part of the depositing steps;
(d) surrounding at least a majority of the fastener with a gas during the depositing and creating steps;
(e) curing the fastener so that the layers of the material bond together;
(f) removing the completed fastener from the support surface; and
(g) wherein the body includes a substantially circular receptacle adapted to retain an elongated workpiece.

7. A method of making a fastener, the method comprising:
(a) depositing a layer of material onto a support surface, the layer defining an outer surface of the fastener;
(b) depositing subsequent layers of the material upon each prior layer until the fastener is completely created;
(c) creating the fastener to comprise a body and a rotatable hinge coupled to the body made of the material, as part of the depositing steps;
(d) surrounding at least a majority of the fastener with a gas during the depositing and creating steps;
(e) curing the fastener so that the layers of the material bond together;
(f) removing the completed fastener from the support surface; and
(g) wherein the body includes an elongated shaft and workpiece-engaging barbs, the shaft extends from the body and the barbs are flexible to allow easier workpiece-insertion by the fastener as compared to more difficult extraction.

8. The method of claim **6**, wherein the hinge is a flexible living hinge coupling together moveable and rigid walls of the body, and the hinge is thinner than adjacent portions of the rigid walls.

9. The method of claim **7**, wherein the body includes a substantially circular receptacle adapted to retain an elongated workpiece.

10. A method of making a fastener, the method comprising:
(a) depositing a layer of material onto a support surface, the layer defining an outer surface of the fastener;
(b) depositing subsequent layers of the material upon each prior layer until the fastener is completely created;
(c) creating the fastener to comprise a body and a rotatable hinge coupled to the body made of the material, as part of the depositing steps;
(d) surrounding at least a majority of the fastener with a gas during the depositing and creating steps;
(e) curing the fastener so that the layers of the material bond together; and
(f) removing the completed fastener from the support surface;
(g) wherein the gas is air, and the fastener is a single piece.

11. The method of claim **6**, further comprising flowing the material from a machine head positioned above the support surface, at least one of the machine head and the support surface automatically moving relative to the other according to computer instructions in order to create identical multiples of the fastener in the same machine cycle, free of contraction or expansion due to the manufacture thereof.

12. The method of claim **6**, wherein the material is a three-dimensionally printable polymer.

13. The method of claim **6**, wherein the material is metal.

14. A method of making a fastener, the method comprising:
(a) depositing a layer of material onto a support surface, the layer defining an outer surface of the fastener;
(b) depositing subsequent layers of the material upon each prior layer until the fastener is completely created;
(C) creating the fastener to comprise a body and a rotatable hinge coupled to the body made of the material, as part of the depositing steps;
(d) surrounding at least a majority of the fastener with a gas during the depositing and creating steps;
(e) curing the fastener so that the layers of the material bond together; and

(f) removing the completed fastener from the support surface;

(g) wherein the depositing is part of direct metal laser sintering, and the curing includes laser fusing of the layers.

15. The method of claim **6**, wherein at least ten of the fasteners are substantially simultaneously manufactured in a single machine cycle in less than ninety minutes.

16. The method of claim **6**, further comprising flowing the material from an ink jet printing head including openings arranged in an array such that multiple material flows are simultaneously occurring for each layer of the fastener.

17. A method of making a fastener, the method comprising:

(a) depositing a layer of material onto a support surface, the layer defining an outer surface of the fastener;

(b) depositing subsequent layers of the material upon each prior layer until the fastener is completely created;

(c) creating the fastener to comprise a body and a rotatable hinge coupled to the body made of the material, as part of the depositing steps;

(d) simultaneously creating a resilient segment integral with the body of the fastener by depositing a layer of a second and more flexible material adjacent the more rigid material defining the body, within the same machine cycle;

(e) surrounding at least a majority of the fastener with a gas during the depositing and creating steps;

(f) curing the fastener so that the layers of the material bond together; and

(g) removing the completed fastener from the support surface.

18. The method of claim **6**, wherein the hinge includes a collar which rotates about a rod coupled to the body.

19. The method of claim **6**, wherein the body is more rigid than the hinge.

20. A method of making a fastener, the method comprising:

(a) depositing a layer of material onto a support surface, the layer defining an outer surface of the fastener;

(b) depositing subsequent layers of the material upon each prior layer until the fastener is completely created;

(c) creating the fastener to comprise a body and a rotatable hinge coupled to the body made of the material, as part of the depositing steps;

(d) creating the hinge to have a curved shape when in a closed position;

(e) surrounding at least a majority of the fastener with a gas during the depositing and creating steps;

(f) curing the fastener so that the layers of the material bond together; and

(g) removing the completed fastener from the support surface.

21. The method of claim **6**, further comprising making the hinge from a different material than the body, both being three-dimensionally printed.

22. The method of claim **10**, further comprising creating the body in an additive manner with a hollow and internal hose or wire-clamping receiver.

23. The method of claim **7**, further comprising:

making a resilient and compressible workpiece-receiving receptacle in an additively layered manner within the body;

the body being more rigid than the receptacle; and

the body being coupled to the hinge.

24. The method of claim **6**, further comprising creating an enlarged end on the hinge, the end being internally located within a wall of the body.

25. The method of claim **1**, wherein the hinge is a living hinge, integrally connecting moveable and rigid walls of the fastener, and the living hinge is thinner than adjacent portions of the rigid walls.

26. The method of claim **1**, further comprising making an elongated shaft, a flexible barb extending from the shaft, and a hose or wire clamp surface of the body, in the machine by three-dimensional printing of the material.

27. A method of making a fastener, the method comprising:

(a) creating a first layer of material to define a first section of the fastener;

(b) emitting light onto the first layer after the prior step to cure, harden or bond the layer;

(c) creating a second layer of the material upon the first layer to define a second section of the fastener after the prior step;

(d) emitting light onto the second layer after the prior step to cure, harden or bond the second layer;

(e) creating at least a third layer of the material upon the second layer to define at least a third section of the fastener after the prior step;

(f) emitting light onto the third layer after the prior step to cure, harden or bond the third layer;

(g) creating a flexible rotatable hinge section from the material which is a printable polymeric material;

(h) creating the fastener in an additive manner as a hose or wire clamp including an internal and hollow hose or wire receptacle;

(i) removing the finished fastener from a machine which performs the creating and emitting steps, with the layers all being integrally connected to their adjacent layers; and

(j) the finished fastener being functional and made by the machine in less than ninety minutes.

28. The method of claim **1**, further comprising making a barbed snap fit in an additive manner, coupled to an opposite portion of the fastener from the hinge, with the machine.

29. The method of claim **1**, further comprising making a resilient and compressible receptacle in an additively layered manner within a shell, the shell being more rigid than the receptacle, and the shell being coupled to the hinge.

30. A method of making a fastener, the method comprising:

(a) three dimensionally printing layers of at least one material to create a base of the fastener;

(b) three dimensionally printing layers of the at least one material to create a lid of the fastener;

(c) three dimensionally printing layers of the at least one material to create a hinge of the fastener which rotatably couples the lid to the base; and

(d) three dimensionally printing a barbed snap fit to secure together the base and the lid.

31. The method of claim **30**, further comprising:

(a) depositing the layers from a printing head onto a support system of a machine in an ambient and unpressurized air environment;

(b) using light to cure each of the layers; and

(c) creating the base, the lid and the hinge in a single cycle of the machine.

32. The method of claim **30**, wherein:

the hinge is a living hinge, integrally connecting moveable and rigid walls of the base and the lid; and

the living hinge is thinner than adjacent portions of the rigid walls.

33. A method of making a fastener, the method comprising:

(a) three dimensionally printing layers of at least one material to create a base of the fastener;

(b) three dimensionally printing layers of the at least one material to create a lid of the fastener;

(c) three dimensionally printing layers of the at least one material to create a hinge of the fastener which rotatably couples the lid to the base; and

(d) making an elongated shaft extending from the base, a flexible workpiece-securing leg projecting from the shaft, and a hose or wire clamping receptacle.

34. The method of claim **30**, wherein the hinge has a substantially Ω-shape in a middle thereof.

35. The method of claim **30**, further comprising making the hinge from the at least one material, which is a light curable polymer, printed in the additives layers by a three dimensional printing machine.

36. The method of claim **30**, further comprising making a bore of the hinge around an elongated rod.

37. The method of claim **30**, further comprising making the hinge from a flexible material so that the hinge flexes to allow the lid to rotate relative to the base.

38. A method of making a fastener, the method comprising:

(a) three dimensionally printing layers of at least one material to create a base of the fastener;

(b) three dimensionally printing layers of the at least one material to create a lid of the fastener;

(c) three dimensionally printing layers of the at least one material to create a hinge of the fastener which rotatably couples the lid to the base; and

(d) three dimensionally printing a resilient seal integral with the base.

39. The method of claim **38**, further comprising three dimensionally printing a barbed snap fit to secure together the base and the lid.

40. A method of making a fastener, the method comprising:

(a) additively depositing base layers to create a rigid base including a side wall and a bottom wall;

(b) additively depositing lid layers to create a lid including a side wall and a top wall;

(c) creating a barbed snap fit extending from at least one of the base and the lid layers;

(d) additively depositing receptacle layers to create a curved hose or wire clamping receptacle within a cavity between the base and the lid layers; and

(e) creating a hinge coupling the side wall of the base to the side wall of the lid.

41. The method of claim **40**, further comprising:

(a) depositing the layers from a printing head onto a support system of a machine in an ambient and unpressurized air environment;

(b) using light to cure each of the layers; and

(c) creating the base, the lid and the hinge in a single cycle of the machine.

42. The method of claim **40**, wherein the hinge is a living hinge, integrally connected to the walls of the base and the lid, and the living hinge is thinner than adjacent portions of the walls.

43. The method of claim **40**, further comprising making the hinge from a light curable polymer printed in the additive layers.

44. The method of claim **40**, further comprising making the hinge from a flexible material so that the hinge flexes to allow the lid to rotate relative to the base.

45. The method of claim **40**, further comprising three dimensionally printing a resilient seal integral with the base.

46. The method of claim **40**, further comprising making the layers from a metallic material.

47. The method of claim **40**, wherein the depositing is part of a direct metal laser sintering.

48. The method of claim **40**, further comprising using a more resilient material to make the receptacle than for the more rigid base and lid.

49. The method of claim **7**, further comprising creating the hinge to have a curved shape when in a closed position.

50. The method of claim **7**, further comprising making the hinge from a different material than the body, both being three-dimensionally printed.

51. The method of claim **7**, further comprising creating the body in an additive manner with a hollow and internal hose or wire-clamping receiver.

52. The method of claim **10**, further comprising creating the hinge to have a curved shape when in a closed position.

53. The method of claim **10**, further comprising making the hinge from a different material than the body, both being three-dimensionally printed.

54. The method of claim **14**, further comprising creating the hinge to have a curved shape when in a closed position.

55. The method of claim **14**, wherein the hinge is a flexible living hinge coupling together moveable and rigid walls of the body, and the hinge is thinner than adjacent portions of the rigid walls.

56. The method of claim **14**, wherein the body includes a substantially circular receptacle adapted to retain an elongated workpiece.

57. The method of claim **14**, further comprising creating the body in an additive manner with a hollow and internal hose or wire-clamping receiver.

58. The method of claim **17**, wherein the body is more rigid than the hinge.

59. The method of claim **17**, further comprising making the hinge from a different material than the body, both being three-dimensionally printed.

60. The method of claim **17**, further comprising creating the body in an additive manner with a hollow and internal hose or wire-clamping receiver.

61. The method of claim **17**, further comprising making an elongated shaft, a flexible barb extending from the shaft, and a hose or wire clamp surface of the body, in the machine by three-dimensional printing of the material.

62. The method of claim **20**, wherein the hinge is a living hinge, integrally connecting moveable and rigid walls of the fastener, and the living hinge is thinner than adjacent portions of the rigid walls.

63. The method of claim **20**, further comprising making the hinge from a different material than the body, both being three-dimensionally printed.

64. The method of claim **27**, further comprising making the hinge from a different material than the body, both being three-dimensionally printed.

65. The method of claim **27**, wherein the receptacle is resilient and compressible.

66. The method of claim **27**, wherein the hinge is a living hinge and the fastener is made with more than fifty machine head passes in the machine which is a three dimensional printing machine.

67. The method of claim **33**, wherein the receptacle is resilient and compressible.

68. The method of claim **33**, wherein the hinge is made from a different material than the body.

69. The method of claim **38**, wherein the hinge is made from a different material than the body.

70. The method of claim **38**, further comprising three dimensionally printing an elongated shaft extending from the base and a flexible barb extending from the shaft, and making the fastener with more than fifty machine head passes.

* * * * *