US006748292B2

(12) **United States Patent**
Mountz

(10) **Patent No.: US 6,748,292 B2**
(45) **Date of Patent: Jun. 8, 2004**

(54) **MATERIAL HANDLING METHOD USING AUTONOMOUS MOBILE DRIVE UNITS AND MOVABLE INVENTORY TRAYS**

(75) Inventor: **Michael C. Mountz**, Palo Alto, CA (US)

(73) Assignee: **Distrobot Systems, Inc.**, Burlington, MA (US)

(*) Notice: Subject to any disclaimer, the term of this patent is extended or adjusted under 35 U.S.C. 154(b) by 0 days.

(21) Appl. No.: **10/357,623**

(22) Filed: **Feb. 3, 2003**

(65) **Prior Publication Data**

US 2004/0010337 A1 Jan. 15, 2004

Related U.S. Application Data

(63) Continuation-in-part of application No. 10/196,772, filed on Jul. 15, 2002.

(51) **Int. Cl.**[7] **G06F 7/00**

(52) **U.S. Cl.** **700/214**; 700/216; 700/245; 700/248; 701/23; 701/213

(58) **Field of Search** 700/213, 214, 700/245, 216, 113, 248; 701/1, 2, 23, 213, 301, 300

(56) **References Cited**

U.S. PATENT DOCUMENTS

4,542,808	A	9/1985	Lloyd, Jr. et al.	
4,678,390	A	7/1987	Bonneton et al.	
4,716,530	A	12/1987	Ogawa et al.	701/23
4,780,817	A	10/1988	Lofgren	701/23
4,789,940	A	* 12/1988	Christian	700/113
4,996,468	A	2/1991	Field et al.	
5,179,329	A	1/1993	Nishikawa et al.	
5,187,664	A	2/1993	Yardley et al.	701/23
5,228,820	A	7/1993	Stansfield et al.	
5,283,739	A	2/1994	Summerville et al.	701/23
5,362,197	A	11/1994	Rigling	
5,395,199	A	3/1995	Day, III et al.	
5,434,490	A	7/1995	Ishida et al.	
5,568,030	A	* 10/1996	Nishikawa et al.	318/587
5,652,489	A	7/1997	Kawakami	
5,663,879	A	9/1997	Trovato et al.	701/2
5,793,934	A	8/1998	Bauer	
5,800,777	A	9/1998	Jehan	
5,801,506	A	9/1998	Netzler	
5,819,008	A	* 10/1998	Asama et al.	700/255
5,825,149	A	* 10/1998	Matsumoto et al.	318/587
5,825,981	A	* 10/1998	Matsuda	700/248
5,928,952	A	7/1999	Hutchins et al.	
5,933,394	A	* 8/1999	Kim	386/126
6,049,745	A	* 4/2000	Douglas et al.	701/23
6,061,607	A	5/2000	Bradley et al.	
6,208,908	B1	3/2001	Boyd et al.	
6,317,648	B1	11/2001	Sleep et al.	
6,339,764	B1	1/2002	Livesay et al.	
6,351,685	B1	2/2002	Dimitri et al.	
6,356,838	B1	3/2002	Paul	
6,421,579	B1	7/2002	Dimitri et al.	
6,463,360	B1	10/2002	Terada et al.	700/257
6,463,460	B1	* 10/2002	Simonoff	709/203
2002/0063225	A1	5/2002	Payton	

* cited by examiner

Primary Examiner—Khoi H. Tran
(74) *Attorney, Agent, or Firm*—Baker Botts L.L.P.

(57) **ABSTRACT**

An inventory system includes a plurality of mobile drive units with a processor control and with a positioning system that enables the mobile drive units to navigate a factory floor. The mobile drive units interface with a material handling system to receive order requests and deliver inventory items to pack stations located on the factory floor. The inventory items are stored in trays stacked into movable inventory pods, which may be transported by the mobile drive units throughout the factory floor. The mobile drive units dock and undock with the movable inventory pods using a docking mechanism. The movable inventory pods are stored in a virtual storage grid when they are not being transported by the mobile drive units. It is emphasized that this abstract is provided to comply with the rules requiring an abstract that will allow a searcher or other reader to quickly ascertain the subject matter of the technical disclosure. It is submitted with the understanding that it will not be used to interpret or limit the scope or meaning of the claims.

53 Claims, 16 Drawing Sheets

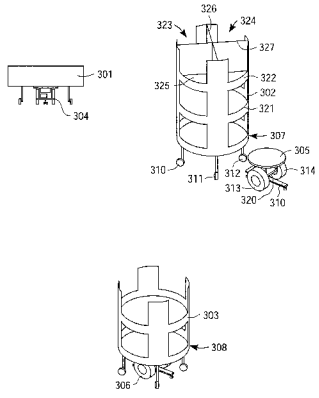

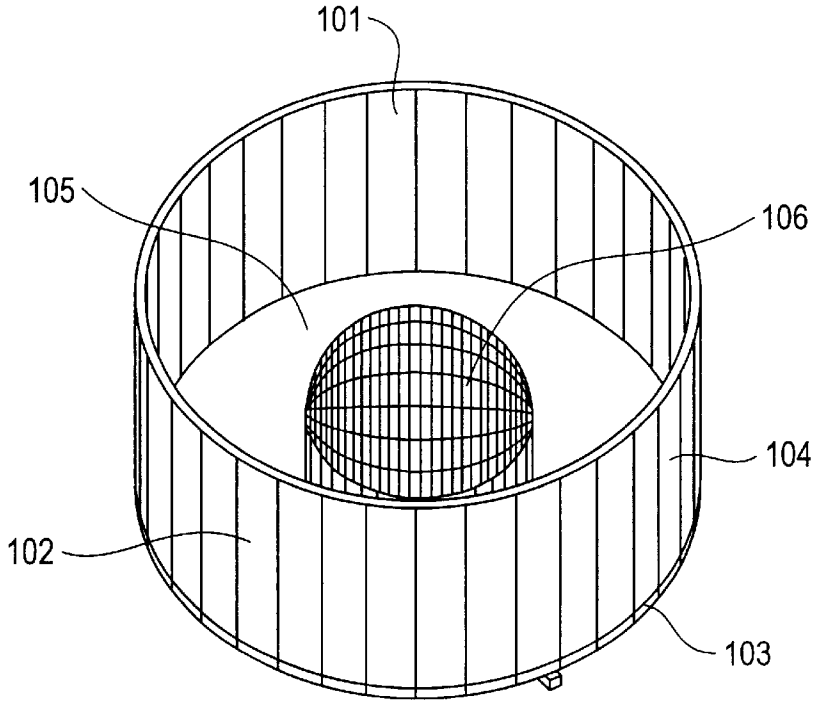

FIG. 1

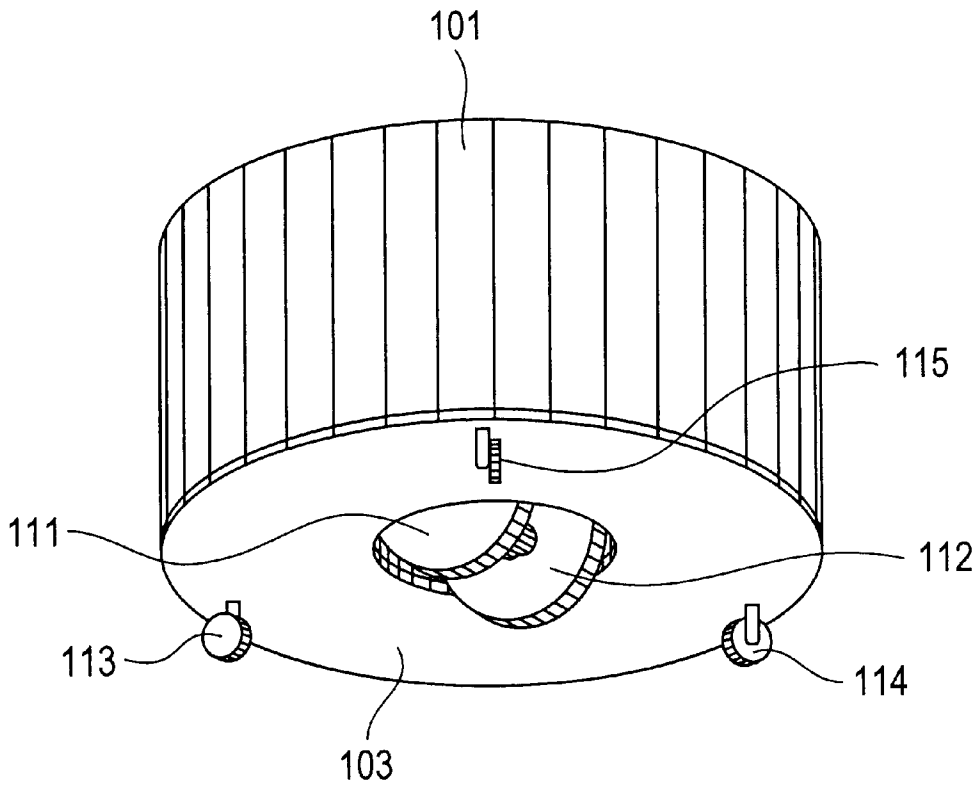

FIG. 2A

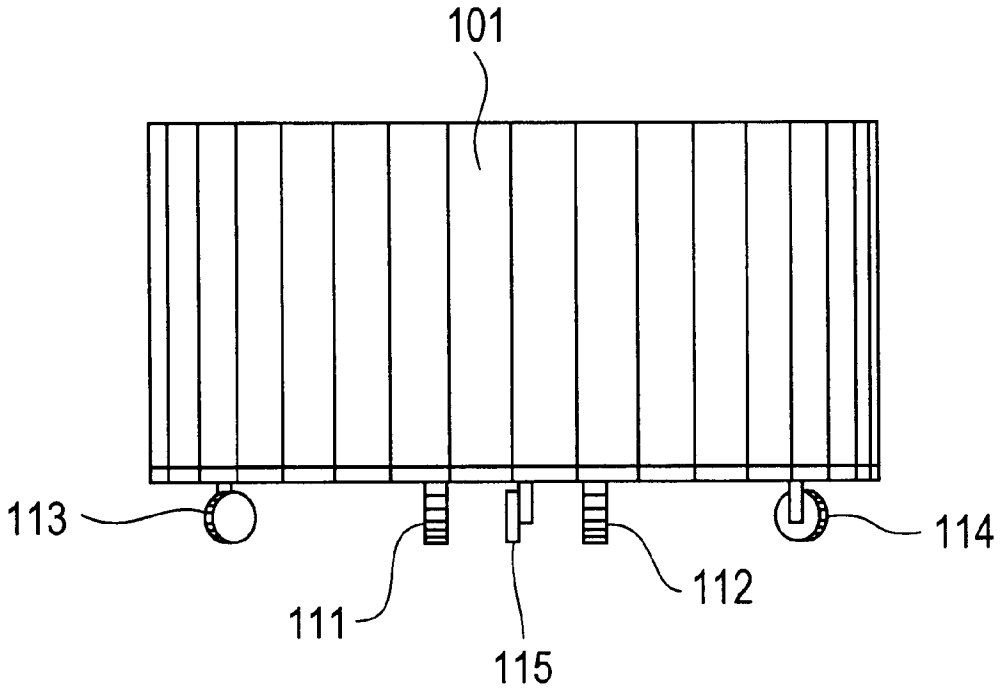

FIG. 2B

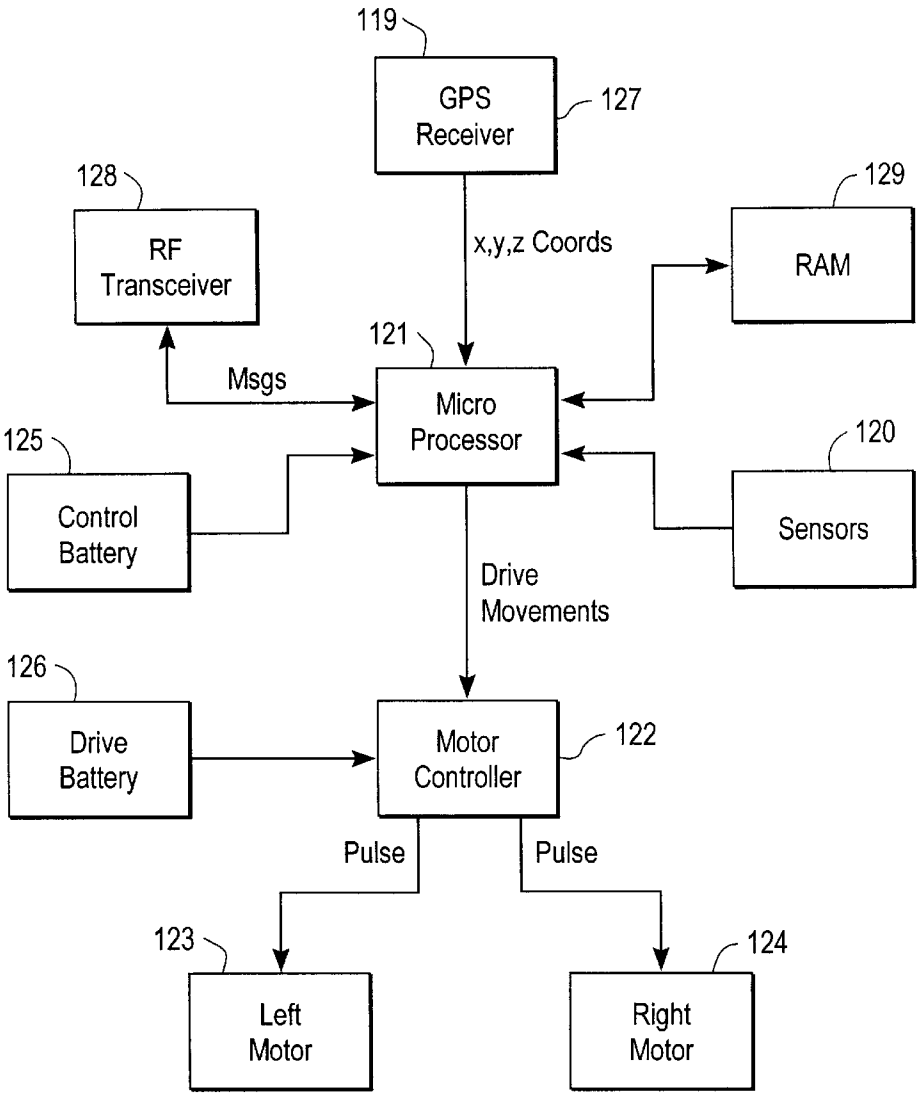
119
GPS Receiver
127
128
RF Transceiver
129
RAM
x,y,z Coords
121
Msgs
Micro Processor
125
Control Battery
120
Sensors
Drive Movements
126
Drive Battery
Motor Controller
122
Pulse
Pulse
123
Left Motor
124
Right Motor

FIG. 3

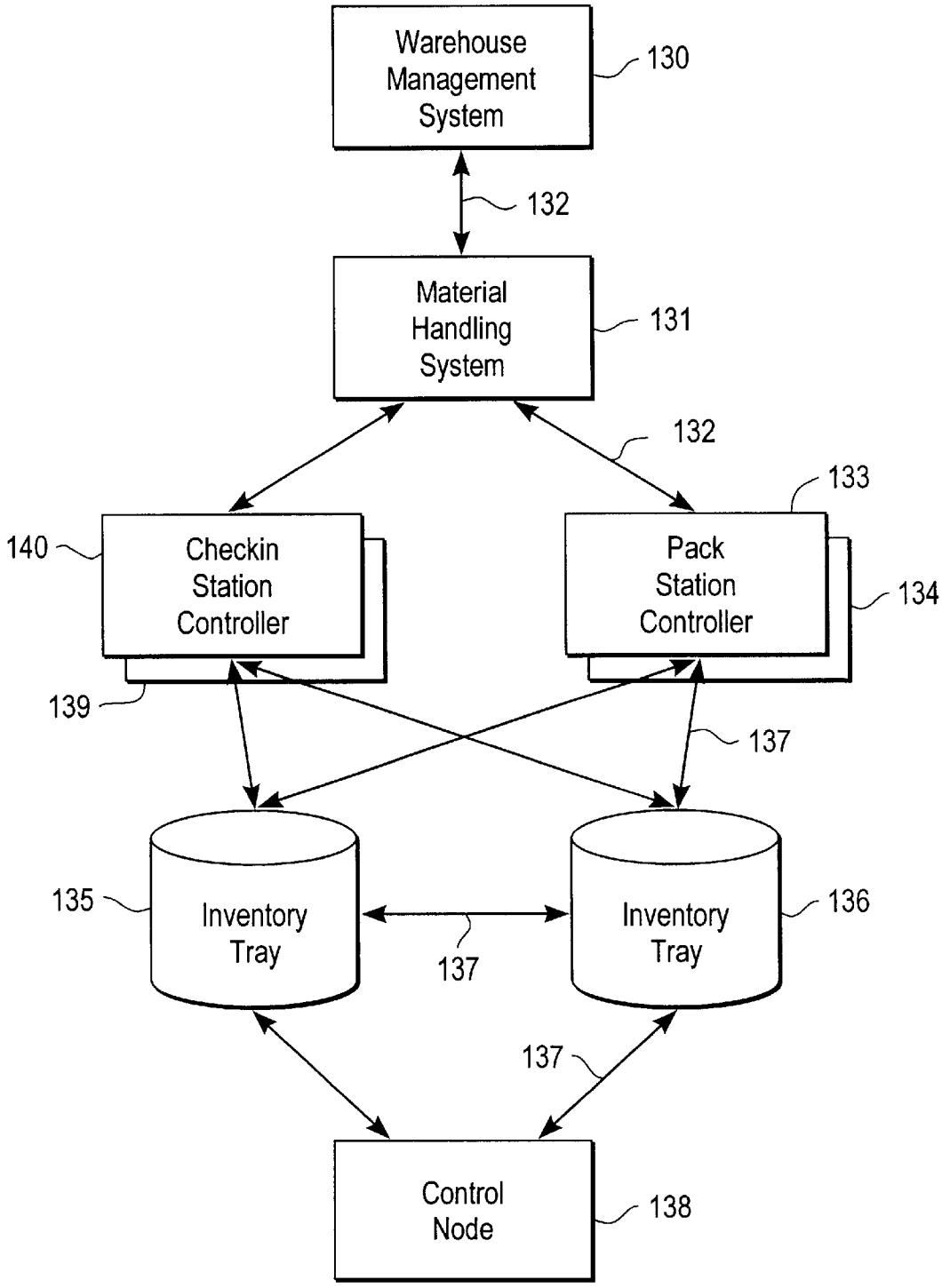
Warehouse Management System
130
132
Material Handling System
131
132
133
140
Checkin Station Controller
Pack Station Controller
134
139
137
135
Inventory Tray
137
Inventory Tray
136
137
Control Node
138

FIG. 4A

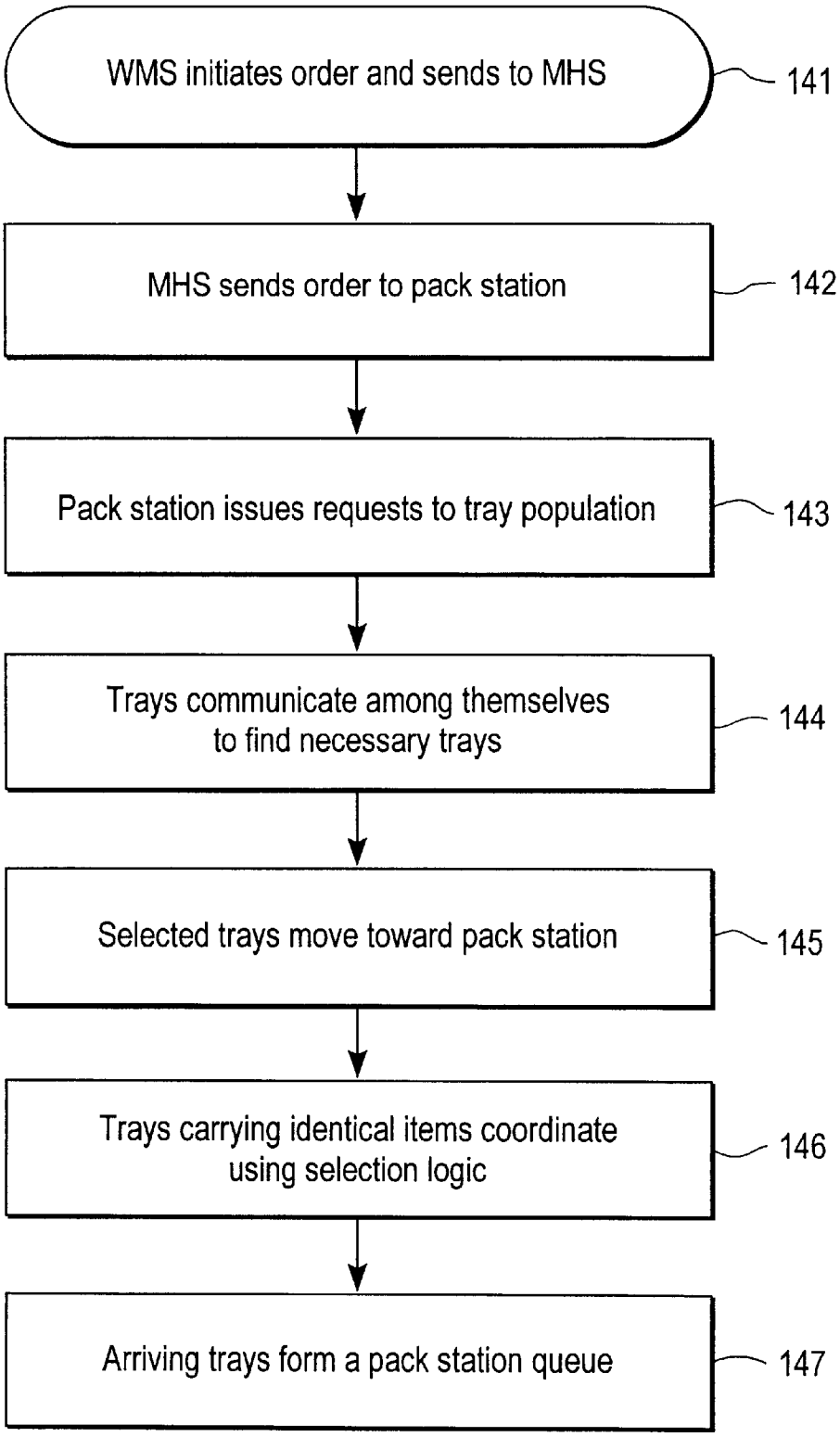
WMS initiates order and sends to MHS
141
MHS sends order to pack station
142
Pack station issues requests to tray population
143
Trays communicate among themselves to find necessary trays
144
Selected trays move toward pack station
145
Trays carrying identical items coordinate using selection logic
146
Arriving trays form a pack station queue
147

FIG. 4B

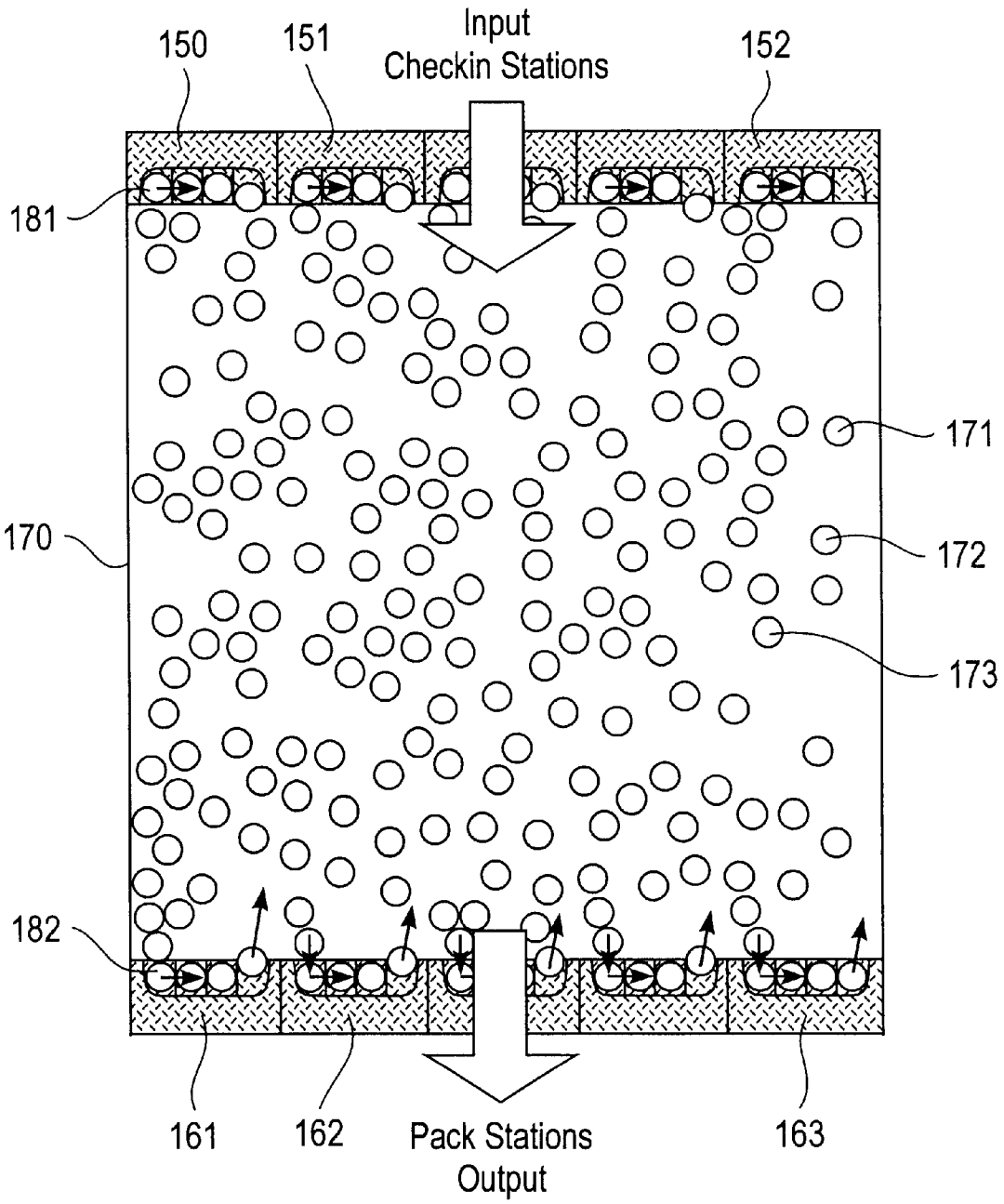
Input
Checkin Stations
150
151
152
181
171
170
172
173
182
161
162
Pack Stations
Output
163

FIG. 5

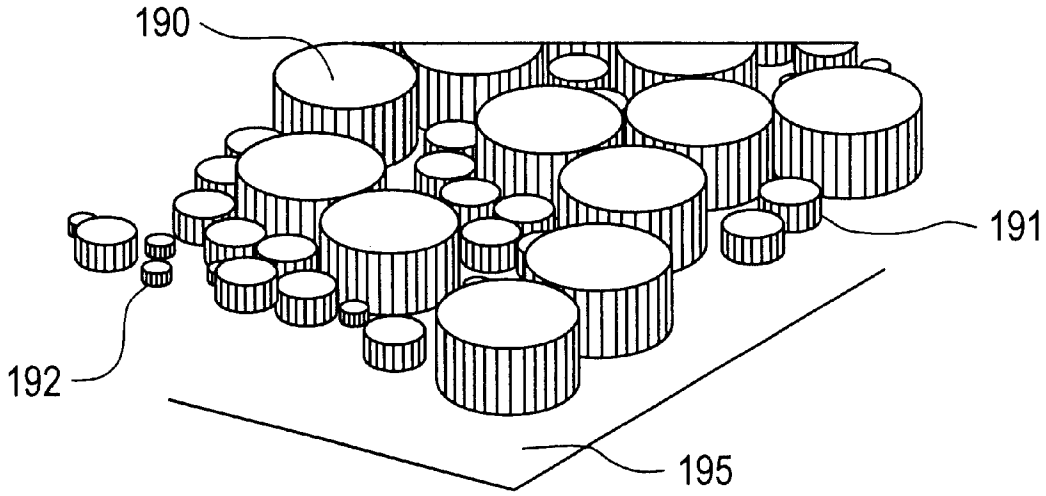

FIG. 6

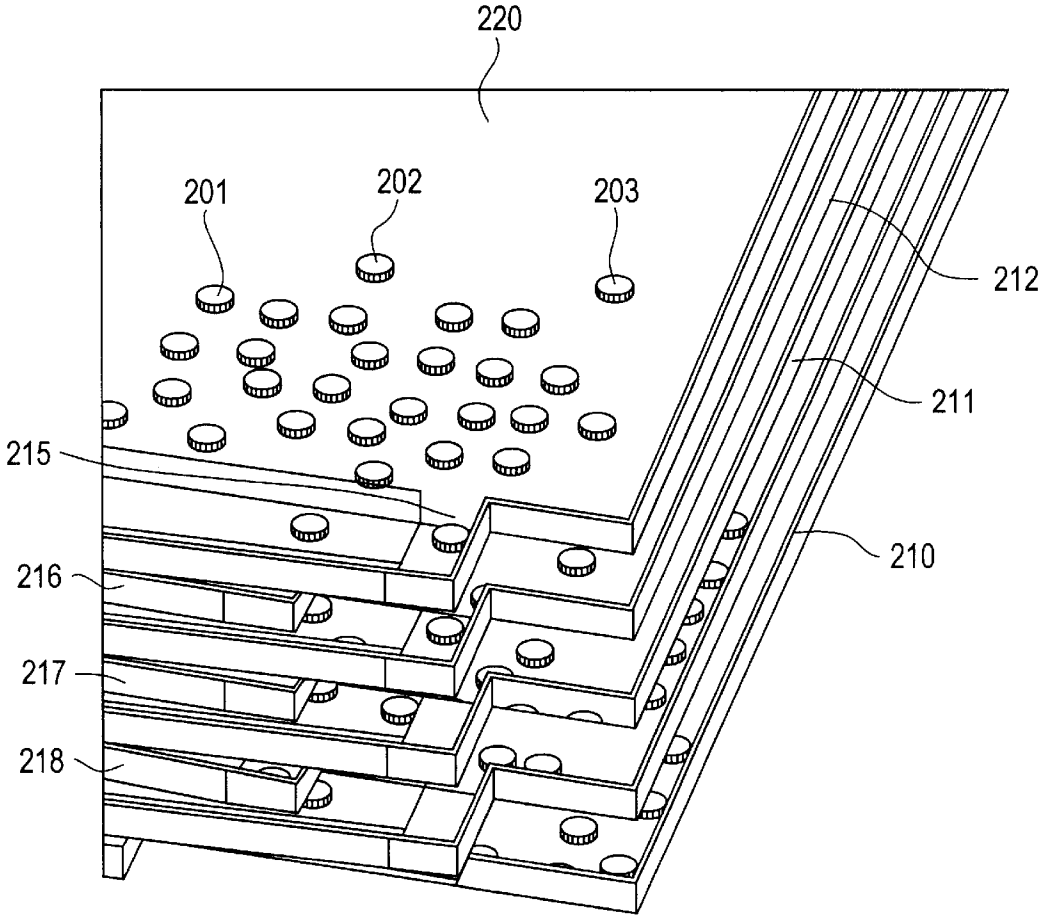

FIG. 7

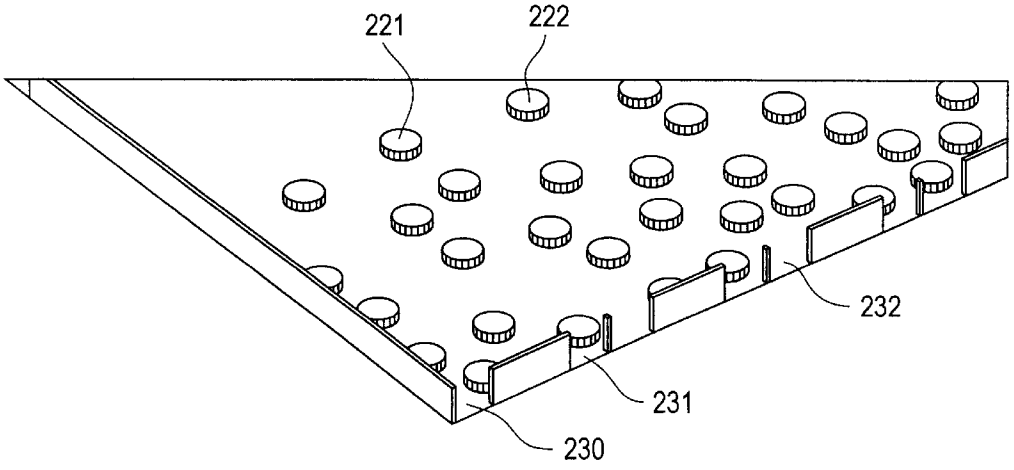

FIG. 8

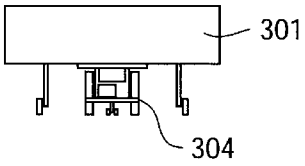

FIG. 9A

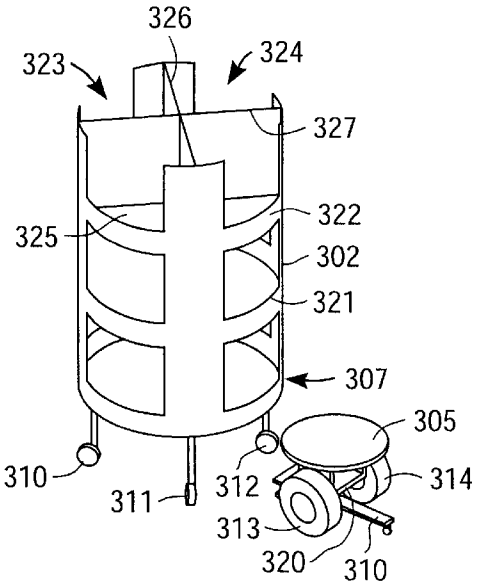

FIG. 9B

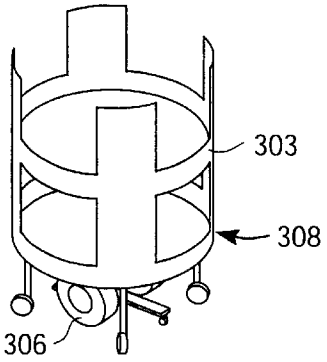

FIG. 9C

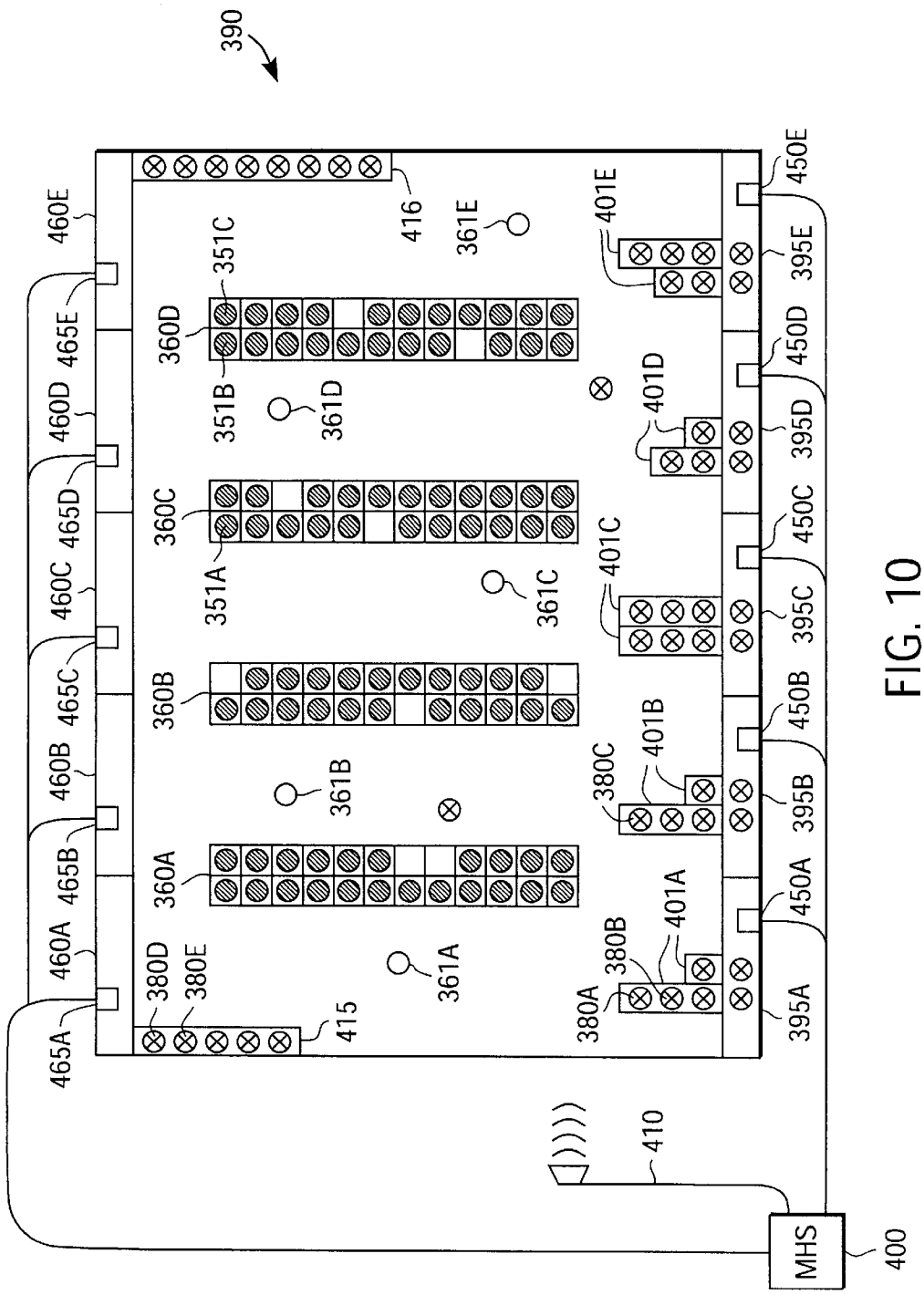
390
460E
465E
460D
465D
460C
465C
460B
465B
460A
465A
380D
380E
415
360A
361A
360B
361B
360C
351A
361C
360D
351B
361D
351C
416
361E
380A
380B
380C
401A
401B
401C
401D
401E
395A
395B
395C
395D
395E
450A
450B
450C
450D
450E
410
MHS
400

FIG. 10

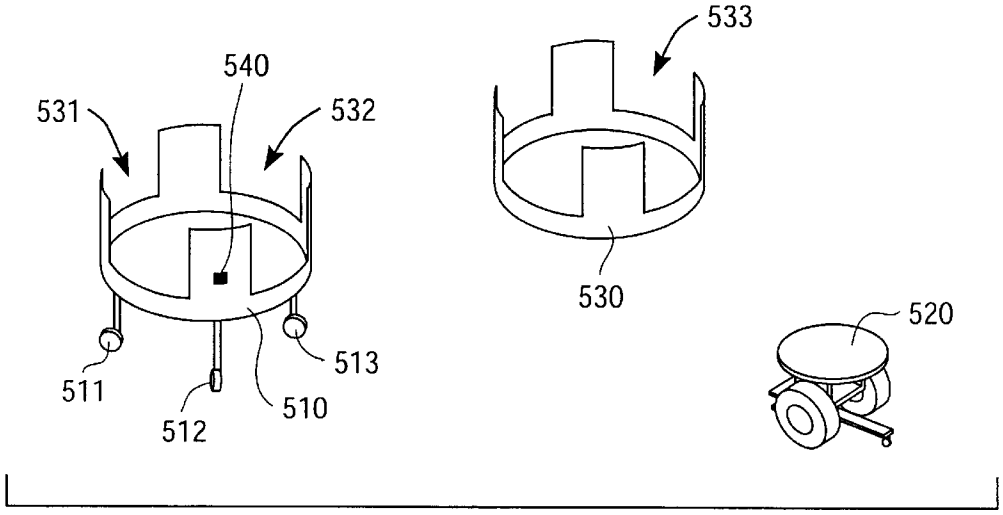

FIG. 11

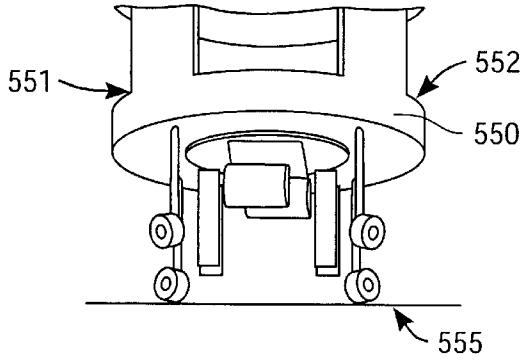

FIG. 12

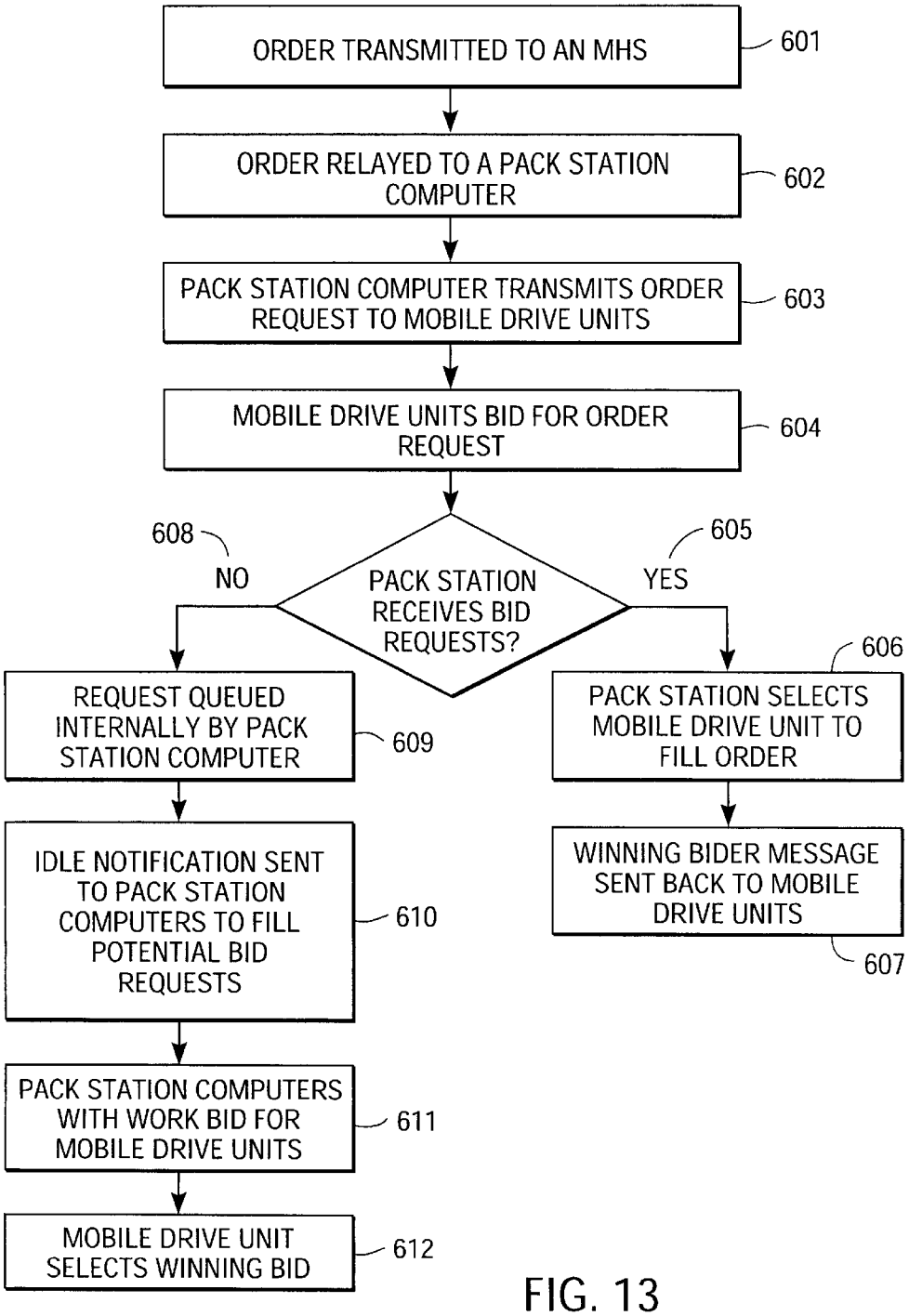
ORDER TRANSMITTED TO AN MHS
601
ORDER RELAYED TO A PACK STATION COMPUTER
602
PACK STATION COMPUTER TRANSMITS ORDER REQUEST TO MOBILE DRIVE UNITS
603
MOBILE DRIVE UNITS BID FOR ORDER REQUEST
604
PACK STATION RECEIVES BID REQUESTS?
608
NO
605
YES
REQUEST QUEUED INTERNALLY BY PACK STATION COMPUTER
609
PACK STATION SELECTS MOBILE DRIVE UNIT TO FILL ORDER
606
IDLE NOTIFICATION SENT TO PACK STATION COMPUTERS TO FILL POTENTIAL BID REQUESTS
610
WINNING BIDER MESSAGE SENT BACK TO MOBILE DRIVE UNITS
607
PACK STATION COMPUTERS WITH WORK BID FOR MOBILE DRIVE UNITS
611
MOBILE DRIVE UNIT SELECTS WINNING BID
612

FIG. 13

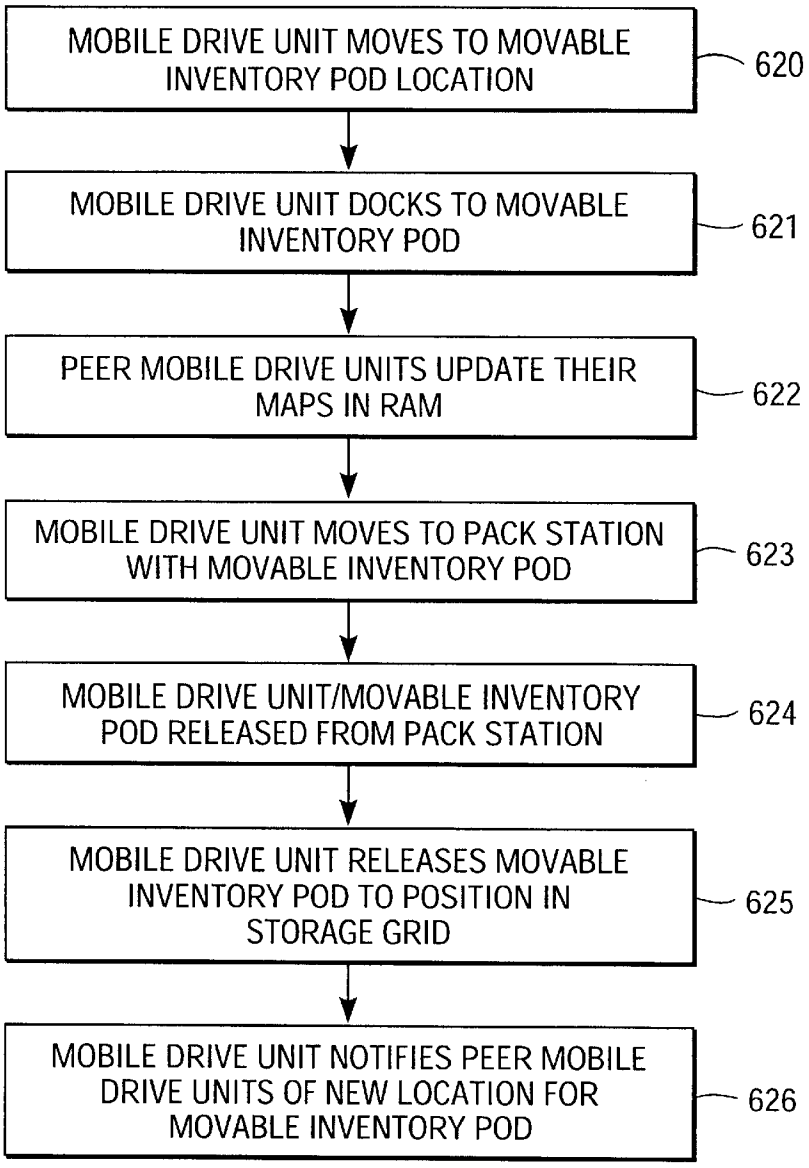
MOBILE DRIVE UNIT MOVES TO MOVABLE INVENTORY POD LOCATION
620
MOBILE DRIVE UNIT DOCKS TO MOVABLE INVENTORY POD
621
PEER MOBILE DRIVE UNITS UPDATE THEIR MAPS IN RAM
622
MOBILE DRIVE UNIT MOVES TO PACK STATION WITH MOVABLE INVENTORY POD
623
MOBILE DRIVE UNIT/MOVABLE INVENTORY POD RELEASED FROM PACK STATION
624
MOBILE DRIVE UNIT RELEASES MOVABLE INVENTORY POD TO POSITION IN STORAGE GRID
625
MOBILE DRIVE UNIT NOTIFIES PEER MOBILE DRIVE UNITS OF NEW LOCATION FOR MOVABLE INVENTORY POD
626

FIG. 14

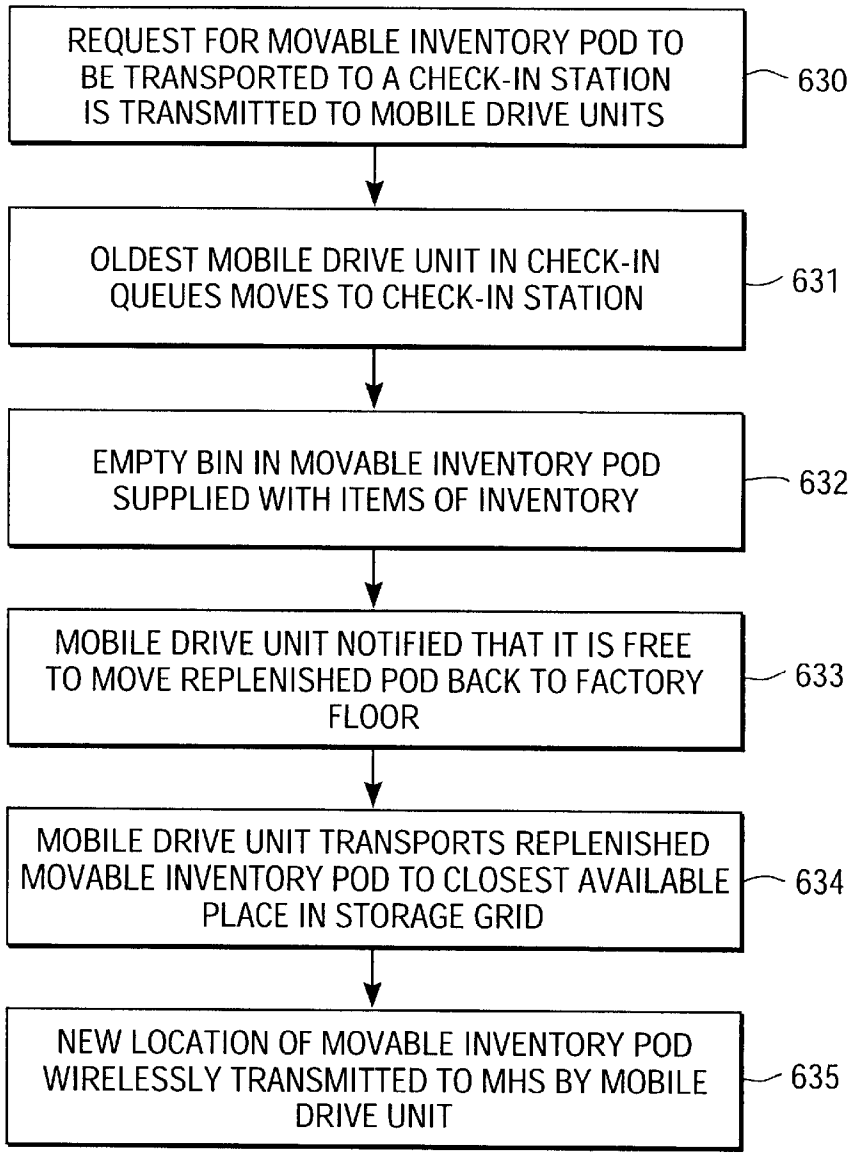
REQUEST FOR MOVABLE INVENTORY POD TO BE TRANSPORTED TO A CHECK-IN STATION IS TRANSMITTED TO MOBILE DRIVE UNITS
630
OLDEST MOBILE DRIVE UNIT IN CHECK-IN QUEUES MOVES TO CHECK-IN STATION
631
EMPTY BIN IN MOVABLE INVENTORY POD SUPPLIED WITH ITEMS OF INVENTORY
632
MOBILE DRIVE UNIT NOTIFIED THAT IT IS FREE TO MOVE REPLENISHED POD BACK TO FACTORY FLOOR
633
MOBILE DRIVE UNIT TRANSPORTS REPLENISHED MOVABLE INVENTORY POD TO CLOSEST AVAILABLE PLACE IN STORAGE GRID
634
NEW LOCATION OF MOVABLE INVENTORY POD WIRELESSLY TRANSMITTED TO MHS BY MOBILE DRIVE UNIT
635

FIG. 15

MATERIAL HANDLING METHOD USING AUTONOMOUS MOBILE DRIVE UNITS AND MOVABLE INVENTORY TRAYS

RELATED APPLICATIONS

This is a continuation-in-part (CIP) application of application Ser. No. 10/196,772 filed Jul. 15, 2002, entitled, "Material Handling System and Method Using Mobile Autonomous Inventory Trays and Peer-to-Peer Communications."

FIELD OF THE INVENTION

The present invention relates generally to the field of material handling; more particularly, to systems and methods of material handling using autonomous mobile drive units and movable inventory trays.

BACKGROUND

The order fulfillment step in the distribution system process is often one of the largest cost components in moving inventory from production to end consumer. This is due to the fact that final order assembly is typically labor intensive and time consuming as operators move among inventory locations and manually handle items. The order fulfillment step involves selecting multiple individual inventory items from among a large assortment of possible items. In contrast, the steps prior to the order fulfillment step in the distribution system process are generally more efficient since they handle inventory in bulk operations such as moving a truckload at a time, a full pallet of one product, or even whole cases.

Due to its large labor costs, order fulfillment operations have long been the focus of innovations designed to reduce labor. These developments have taken the form of pick-to-light technology, wireless barcode readers, conveyor systems that move orders to operators and even automated storage and retrieval systems ("ASRS") that bring the inventory to the worker. Common ASRS solutions are sometimes called carousels or stockers. A typical carousel may have several thousand storage bins installed in a rotating structure that operates similar to the spinning clothes rack at a dry cleaning facility. Another type of solution known as a sorter is used in conjunction with inventory storage equipment and comprises a revolving tray mechanism that helps sort items coming from inventory into their target order bins. Yet another solution is to provide fixed racking aisles served by a gantry robot that moves in and out of the aisles to bring inventory to the front of the storage system.

These solutions have been embraced by the distribution industry for their ability to streamline operations and cut operating costs. Yet even with these often expensive systems, fulfillment costs remain high and distribution system managers continue to search for ways to reduce operating costs.

Another major shortcoming of the current set of order fulfillment solutions is complexity. These automated systems often involve complex control software, lengthy installation, integration and bring-up time, and fail to perform robustly over long periods. Current solutions must be monitored, tuned, and managed by experts with sophisticated knowledge of the system's workings. In addition, these systems are often inflexible to new processes that may be required as an organization's needs change.

What is needed is an order fulfillment system that is simple to install, operate, and maintain, and that would further reduce operating costs.

BRIEF DESCRIPTION OF THE DRAWINGS

The present invention will be understood more fully from the detailed description that follows and from the accompanying drawings, which however, should not be taken to limit the invention to the specific embodiments shown, but are for explanation and understanding only.

FIG. **1** is a top perspective view of a mobile inventory tray according to one embodiment of the present invention.

FIG. **2**A is a bottom perspective view of a mobile inventory tray according to one embodiment of the present invention.

FIG. **2**B is a front side view of the mobile inventory tray of FIG. **2**A.

FIG. **3** is a high-level system block diagram of tray subsystems according to one embodiment of the present invention.

FIG. **4**A is a block diagram of a system interface to a warehouse management system according to one embodiment of the present invention.

FIG. **4**B is a flow chart showing the steps of an order fulfillment process using mobile inventory trays.

FIG. **5** is a top view of mobile inventory trays located on a factory floor according to one embodiment of the present invention.

FIG. **6** is a perspective view of mobile inventory trays located on a factory floor according to one embodiment of the present invention.

FIG. **7** is a perspective view of mobile inventory trays populating multiple vertical floor levels within a factory space according to one embodiment of the present invention.

FIG. **8** is a perspective view of mobile inventory trays on a factory floor showing openings in the floor enclosure according to one embodiment of the present invention.

FIGS. **9**A–**9**C are a side view and first and second perspective views of movable inventory trays and detachable mobile drive units according to one embodiment of the present invention.

FIG. **10** is a top view showing movable inventory trays arranged in a cellular grid with support lanes and queue locations on a factory floor according to one embodiment of the present invention.

FIG. **11** is a three-part movable inventory tray including a base tray, a stack tray, and a mobile drive unit according to one embodiment of the present invention.

FIG. **12** is a mobile drive unit docked to a base tray according to one embodiment of the present invention.

FIG. **13** is a flow chart illustrating a mobile drive unit selection process to fill an order request according to one embodiment of the present invention.

FIG. **14** is a flow chart illustrating an order fill process using autonomous mobile drive units and movable inventory trays according to one embodiment of the present invention.

FIG. **15** is a flow chart illustrating an inventory replenishment process using autonomous mobile drive units and movable inventory trays according to one embodiment of the present invention.

DETAILED DESCRIPTION

A material handling system and method using mobile autonomous inventory trays and peer-to-peer communications is disclosed. In the following description numerous specific details are set forth, such as the particular configuration of mobile inventory trays, the use of mobile inventory

trays on a factory floor, and details regarding communication technologies, etc., in order to provide a thorough understanding of the present invention. However, persons having ordinary skill in the material handling arts will appreciate that these specific details may not be needed to practice the present invention.

According to an embodiment of the present invention, autonomous mobile inventory trays, which are robotic devices, are used to extend the concept of bringing a storage location to an operator (e.g., person, robot, etc.) in a novel way. Inventory is stored in mobile trays that can move in any direction under their own power within an established storage area of an organization (e.g., a factory floor). There are no predetermined storage locations for the mobile inventory trays other than that they exist somewhere within a designated space (e.g., an enclosed factory floor). The mobile inventory trays are free to move in any direction necessary including up and down ramps to other inventory floor levels. In this manner, the mobile inventory trays can respond to pick requests and move to pack station locations as part of the pick-and-pack order filling process. The mobile inventory trays may communicate with each other via radio frequency ("RF") technology (e.g., the Bluetooth wireless protocol link) or other types of peer-to-peer communication. The mobile inventory trays may use a pseudolite indoor global positioning system ("GPS") to provide themselves with an accurate position of their location within the predefined inventory storage area. Alternate positioning technologies may also be used such as 802.11-based localization technology or Ultra Wide Band (UWB) signaling based location technology. The mobile inventory trays may then use this information to calculate routes to a pack station, and their peer-to-peer communications ability to coordinate clear paths on the factory floor, or to queue with other trays at control nodes.

The mobile inventory trays of the present invention are thus automatic unguided vehicles (an "AUV") rather than automatic guided vehicle (an "AGV"). They are able to navigate the factory floor autonomously using information obtained from the on-board GPS and RF communication systems without any guidance assistance from a remote central computer. This system of mobile inventory trays is self-tuning and self-optimizing. Frequently requested trays migrate closer to the pack stations, while trays containing slower moving inventory items drift back and to the sides and may even move to upper levels. In this sense, the material handling system and method of the present invention is a complex adaptive system and demonstrates emergent system behavior.

As with all material handling systems, the autonomous storage and retrieval system and method of the present invention may integrate with existing warehouse management software ("WMS") systems. For example, order requests may be made from a WMS to the material handling system ("MHS") and relayed to the appropriate pack station computers which then direct the order fulfillment from inventory brought to the pack stations utilizing the mobile inventory trays. Orders may be processed in parallel, i.e., multiple orders may be filled simultaneously at a given pack station and multiple pack stations can operate concurrently. Parallel processing of orders allows for real-time fulfillment of orders, in that multiple orders may be filled in minutes rather than in hours. Operators pick the inventory items from the arriving trays, place the items in the order container and, when the order is complete, the pack station computer relays this information to the MHS which in turn notifies the WMS.

Referring now to FIG. **1** there is shown a perspective view of a mobile inventory tray **101** according to one embodiment of the present invention. Mobile inventory tray **101** is designed so that it may move autonomously on a surface, such as a factory floor (not shown in this view). Although mobile inventory tray **101** may be specifically discussed in reference to its movement on a factory floor, it should be noted that mobile inventory tray **101** may be used in a variety of capacities including those typified by pick-and-pack operations, order fulfillment operations, or assembly line operations where a few items are drawn from a large population of possible items. An example of such an operation is where a single item is drawn from a large population of books, movies, food supplies, subsystem parts, etc.

Mobile inventory tray **101** comprises an enclosure **102** to contain various inventory items (not show in this view). In the embodiment illustrated by FIG. **1**, the enclosure is a circular, one-piece assembly container having a base or bottom wall **103** and a side wall **104** extending upwardly from the bottom wall **103** to create a compartment **105** for the inventory items. It should be noted that the mobile inventory tray does not necessarily need to be circular, as is shown in FIG. **1**. The design of the mobile inventory tray **101** may vary in size and shape based on the type of inventory items the factory stores. Mobile inventory tray **101** also contains a housing **106** for its drive system and control electronics which will be described in more detail later.

Referring now to FIG. **2**A there is shown a bottom perspective view of a mobile inventory tray **101**. Two driving wheels **111** and **112** and three small freely-rotating casters **113–115** are shown mounted to the base **103** of the mobile inventory tray **101**. The driving wheels **111** and **112** are operated by motors (not shown in this view) located in the housing **106** of mobile inventory tray **101**. The drive wheels **111** and **112** always remain in contact with the factory floor. Casters **113–115** function to support the load and maintain mobile inventory tray **101** in rolling contact with the floor despite imbalances in the items contained in enclosure **102**. The motors may be attached to the driving wheels **111** and **112** in a conventional manner.

FIG. **2**B is a front side view of the mobile inventory tray of FIG. **2**A. Casters **113–115** roll freely and balance the mobile inventory tray **101** as it moves along a surface (not shown in this view) by using the driving wheels **111** and **112**. It should be noted that the mobile inventory tray **101** may use other locomotion means as well, including motor driven tracks, propellers, ball-wheels or a combination of locomotion devices.

FIG. **3** is a high-level block diagram of the subsystems of a mobile inventory tray according to one embodiment of the present invention. The mobile inventory tray subsystem may be implemented as a computer-based (i.e., microprocessor-based) device. For instance, all of the elements shown in FIG. **3** may be contained within housing **106** (see FIG. **1**) secured to the mobile inventory tray.

A motor controller **122** controls the movement of the mobile inventory tray in response to drive movement commands received from microprocessor **121**. Motor controller **122** is coupled to provide pulse signals to a left motor **123** and a right motor **124**. The motors **123** and **124** are coupled to the drives wheels (see FIG. **1**) which propel the mobile inventory tray forward and backward in response to the signals provided by controller **122**. A control battery **125** and a drive battery **126** provide the electrical power for operating the electrical systems **122** and drive motors **123** and **124**. The mobile inventory tray may move to and couple with charging stations (not shown) as needed to replenish the battery power.

Microprocessor **121** of the mobile inventory tray subsystem **119** provides the intelligence for the mobile inventory tray. A random-access ("RAM") **129** memory may be included to provide memory storage and as a source of data. A global positioning system ("GPS) receiver **127**, radio frequency ("RF") communication transceiver **128**, and sensors **120** provide signals to microprocessor **121**. For example, GPS receiver **127** outputs position coordinates (x, y, z), while transceiver **128** provides command and other messages, and sensors **120** provide signals to microprocessor **121**. Sensors may include infrared, optical, acoustic, contact, laser, sonar, magnetic, etc. common to mobile robotic vehicles for the purpose of identifying obstacles, avoiding collisions, finding edge limits etc. Microprocessor **121** may also send information (e.g., location, status, diagnostics, etc.) to a remote receiver utilizing transceiver **128**.

As the mobile inventory tray moves about the factory floor it may provide itself with an accurate position of its location at all times using the GPS receiver **127**. The GPS receiver **127** or equivalent system receives signals for determination of its position coordinates. This position information may include geographic longitude and latitude, as well as the height above normal zero or Cartesian coordinates in a manner that is commonly known. Those skilled in the art will appreciate that other guidance methods and systems including radar-based inertial navigation using gyroscopes, laser triangulation, cell-based locator logic (e.g., such as the emergency 911 positioning technology), and visual referencing may also be used by the mobile inventory tray to determine its position coordinates. The mobile inventory tray utilizes the position coordinates obtained from the GPS receiver **127** to calculate routes on the factory floor. It may also utilize position information when navigating to clear paths or queue with other mobile inventory trays, as will be described in detail shortly.

The mobile inventory tray may communicate its position and other data (e.g., the content of its inventory, its destination pack station, etc.) in a peer-to-peer fashion to other mobile inventory trays using RF communication as provided through receiver **128**. In the embodiment illustrated by FIG. **3**, a short-range communications medium such as a Bluetooth wireless protocol link or an ordinary infrared communication link may be used to provide a direct wireless link between mobile inventory trays. It should be understood that various wireless and terrestrial communications technologies may be employed. For example, the mobile inventory tray may be equipped with a device for communicating using the Global System for Mobile Communications ("GSM") protocol, the General Packet Radio Service ("GPRS") protocol, the 802.11b Wi-Fi networking protocol, and/or any other communication protocol/standard capable of communicating data. In a two-way mode of operation, transceiver **128** is equipped with an interface for both receiving and transmitting data over the direct wireless link. The wireless link may also communicate with the material handling system ("MHS") (not shown in this view) which interfaces with the individual mobile inventory trays. In this manner, the mobile inventory trays may be directed to various check-in stations and/or pack stations to process orders requested by the MHS. The mobile inventory tray may use the RF communication system provided by transceiver **128** and the GPS receiver **127** to navigate to appropriate check-in stations and/or pack stations.

Referring now to FIG. **4**A there is shown a block diagram of a system interface to a WMS **130** according to one embodiment of the present invention. The WMS **130** comprises a host computer that communicates data such as a production order (i.e., a request for an item(s) of inventory) to a Materials Handling System ("MHS") **131**. The WMS **130** may be implemented as any one of a number of well known systems used to manage inventory in a factory or warehouse. WMS **130** transmits orders for shipments, tracks receipts, monitors factory inventory, etc. The WMS **130** transmits the request for the item(s) of inventory to the MHS **131** through a network connection, such as an intranet network **132**. It should be noted that a variety of wireless and/or terrestrial communications technologies may also be used to transmit this request, including a wide area network ("WAN"), a local area network ("LAN"), or any other system of interconnections enabling two or more computers to exchange information. The MHS **131** then transmits the data using the above network connection methods to one or more pack station controllers **133**, **134**, etc. In turn, the pack station controller **133**, **134**, etc., wirelessly transmits the data request for the item(s) of inventory to one or more of the mobile inventory trays **135**, **136** via a communication device in the pack station controller **133**, **134**, etc., using an RF link **137**.

There may be multiple mobile inventory trays **135**, **136**, etc., moving about on a factory floor, with each mobile inventory tray **135**, **136**, etc., carrying a particular item(s) of inventory. Note, that in certain implementations, it is also possible for a single mobile inventory tray to carry multiple different types of inventory items in order to reduce the overall number of trays needed in the system. When the request for an item(s) of inventory is received by one or more mobile inventory trays **135**, **136**, etc., the mobile inventory trays transmit the request to peer mobile inventory trays **135**, **136**, etc. using the RF link **137**. In a matter of seconds (or in a smaller increment of time), every mobile inventory tray **135**, **136**, etc., has received the request. Mobile inventory trays **135**, **136**, etc., containing the requested items(s) of inventory are instructed by their microprocessor **121** (see FIG. **3**) to move to the pack station controller **133**, **134**, etc., all the while locating themselves on the factory floor with their GPS (not shown in this view). During movement, the mobile inventory trays **135**, **136**, etc. may also communicate with other control nodes **138** such as charging stations, obstacle markers, ramp markers, etc. using the RF link **137**. When mobile inventory trays **135**, **136**, etc., arrive at the pack station controller **133**, **134**, etc., an operator (e.g., a human, a robot, etc.) removes the requested inventory item(s) from the mobile inventory trays **135**, **136**, etc. Pack station controller **133**, **134**, etc., tracks inventory item(s) requests as they are satisfied. This tracking function may be performed by scanning a barcode affixed to the inventory item(s). Pack station controller **133**, **134**, etc., communicates with the microprocessor **121** on mobile inventory trays **135**, **136**, etc., so that once an order is satisfied (e.g., requested item(s) is removed from the mobile inventory trays **135**, **136**, etc., and scanned by the barcode scanner) the mobile inventory trays **135**, **136**, etc., are released so that they may again move about the factory floor to fill other orders. The pack station controller **133**, **134**, etc., may also communication with the MHS **131** via the intranet network **132** or via some other wireless and/or terrestrial link, which in turn communicates with the WMS so that it may also track when order requests have been satisfied.

It should be noted that each mobile inventory tray **135**, **136**, etc., receives a supply of a particular item(s) of inventory at one or more check-in station(s) **139**, **140**, etc., where pallets may arrive from vendors on a regular basis. An operator at the check-in station **139**, **140** etc. removes items

of inventory from the pallets and places the items in the mobile inventory tray **135**, **136**, etc. For example, mobile inventory tray **135** may carry tubes of toothpaste while mobile inventory tray **136** may carry cartons of milk. Mobile inventory trays **135**, **136**, etc. know to move themselves to a check-in station **139**, **140**, etc. to replenish their inventory item(s) as they are depleted. When depleted, the empty mobile inventory tray may take on any new inventory item as determined by the operator at the check-in station. Mobile inventory trays **135**, **136**, etc., may also receive requests from the MHS **131** to move to check-in station **139**, **140**, etc. as more pallets arrive.

Another embodiment of the present invention provides for giving inventory certain intelligence. According to this embodiment, as depicted by FIG. **4**B, not only can the pack station controller **143** communicate with the inventory, the inventory can also essentially communicate with other inventory via mobile inventory trays. FIG. **4**B is a flow chart showing the steps of an order fulfillment process using mobile inventory trays interfacing with each other and with the material handling system of FIG. **4**A. In one embodiment, an order (e.g., for bread and milk) is transmitted from the WMS **141** to the MHS. The MHS **142** then relays this order to a pack station controller. The pack station controller **143** transmits the order to mobile inventory trays using an RF link. The mobile inventory trays then communicate among themselves to locate the trays that contain the requested inventory items **144**. When a tray does not contain a requested item it relays the request to peer trays. (e.g., "I do not have bread, but does anyone else have bread?"). The system relays the request all the way across the factory floor in this fashion. In a matter of seconds, every mobile inventory tray that contains requested items begins moving toward the pack station controller **145**. As mobile inventory trays containing requested items move toward the pack station, other mobile inventory trays which are not part of this order coordinate to move aside. If two mobile inventory trays attempting to fill the same item request come within a short range of each other (e.g., 30 feet), they may communicate to determine who should fill the order **146**. One mobile inventory tray may state that it has two loaves of bread, and another mobile inventory tray may state that it has five loaves. Then according to embedded tray selection algorithms, one tray moves aside and the other tray continues to move toward the pack station, because it is the optimum mobile inventory tray to fill the order. In this manner, the system is not only self-regulating but also self-optimizing in that item(s) of inventory that are requested more often drift closer to the pack station for more rapid response on subsequent order requests. As mobile inventory trays arrive at pack station, they communicate with each other to form an orderly queue **147** so that an operator can remove the requested items.

Referring now to FIG. **5** there is shown a top view of multiple mobile inventory trays located on a factory floor according to one embodiment of the present invention. According to the embodiment illustrated by FIG. **5**, check-in stations **150**, **151**, **152**, etc., and pack stations **161**, **162**, **163**, etc., are located on opposite sides of a factory floor **170**. It should be noted that the configuration of the factory floor **170** and the location of the check-in stations **150**, **151**, **152**, etc., and the pack stations **161**, **162**, **163**, etc., in relation to the factory floor **170** may change depending on a variety of considerations (e.g., size and quantity of the inventory item(s) processed, types of inventory item(s), size of the factory floor, etc.). Mobile inventory trays **171**, **172**, **173**, etc., are free to move about the factory floor **170** in any direction using the propulsion means disclosed above (see FIGS. **1** and **2**). The mobile inventory trays **171**, **172**, **173**, etc., may be directed to various check-in stations **150**, **151**, **152**, etc., and/or pack stations **161**, **162**, **163**, etc., to fill order requests by the MHS (not shown in this view). The mobile inventory trays **171**, **172**, **173**, etc., form orderly queues as they enter the input areas **181**, **182** of the check-in stations **150**, **151**, **152**, etc., and/or pack stations **161**, **162**, **163**, etc. Operators (not shown in this view) move inventory item(s) (not shown in this view) into and out of the mobile inventory trays **171**, **172**, **173**, etc., as the mobile inventory trays move through the check-in **150**, **151**, **152**, etc. and pack stations **161**, **162**, **163**, etc.

Referring now to FIG. **6** there is shown a perspective view of multiple mobile inventory trays located on a factory floor according to one embodiment of the present invention. The mobile inventory trays **190**, **191**, **192**, etc., may be of varying sizes and shapes. As shown in FIG. **6**, the mobile inventory trays **190**, **191**, **192**, etc., are circular and vary in size and shape. Mobile inventory trays **190**, **191**, **192**, etc., may also be customized to transport specialty items (e.g., items that require special care). There are no predetermined storage locations for the mobile inventory trays **190**, **191**, **192**, etc., other than that they exist somewhere within the designated inventory storage area on a factory floor **195**. This is due to the fact that the mobile inventory trays **190**, **191**, **192**, etc., are "smart" trays. They direct themselves wherever they need to be on the factory floor **195**. As described herein, the location of the mobile inventory trays **190**, **191**, **192**, etc., is not tracked, assigned, or controlled, until they are directed to a pack station or a check-in station (not shown in this view). In this sense, the material handling system and method of the present invention provides for a location-less inventory storage and retrieval system.

Referring now to FIG. **7** there is shown is a perspective view of mobile inventory trays populating multiple vertical floor levels within a factory space according to one embodiment of the present invention. Mobile inventory trays **201**, **202**, **203**, etc., are located and free to move about on all vertical floor levels **210**, **211**, **212**, etc., within the factory space of a multi-floor inventory storage area **220**. Floor enclosure openings **215** and ramp access **216**, **217**, **218**, etc., is provided on every vertical floor level **210**, **211**, **212**, so that the mobile inventory trays **201**, **202**, **203**, etc. may move freely from floor to floor. Check-in stations and pack stations (not shown in this view) may be located on one floor level **210** or every floor level **211**, **212**, etc., depending on the configuration of the facility.

Referring now to FIG. **8** there is shown a perspective view of mobile inventory trays on a factory floor showing openings in the floor enclosure according to one embodiment of the present invention. In the embodiment illustrated by FIG. **8**, mobile inventory trays **221**, **222**, etc., move through floor enclosure openings **230**, **231**, **232**, etc. to gain access to pack stations, check-in stations etc. Ramps may be provided (see FIG. **7**) for the mobile inventory trays **221**, **222**, etc., to move in any direction necessary including up and down the ramps to other inventory floor levels. In this way, mobile inventory trays **221**, **222**, etc., can respond to pick requests and move to pack station locations (not shown in this view) to fill orders. The mobile inventory trays may also move to other inventory floor levels using other types of mechanisms as well (e.g., elevators).

There are several different embodiments by which mobile autonomous inventory trays can be used to facilitate inventory management. Two such embodiments are described as fixed drive units and detachable drive units. In the detach-

able drive unit embodiment of the present invention, the drive mechanism is a detachable unit described as a mobile drive unit that can dock and undock with movable inventory trays as needed to carry out inventory movement requests. The movable inventory trays remain motionless until such time as a mobile drive unit docks with a movable inventory tray and moves it through the inventory picking process and releases it into a storage location. The mobile drive units may place the movable inventory trays down in an organized virtual layout such that other mobile drive units can locate the trays. Movable inventory trays may be stacked to form inventory pods that are moved by the mobile drive units. Another characteristic of the detachable drive unit embodiment is that mobile drive units may send and receive instruction messages in a broadcast fashion over a typical wireless network and may still communicate in a peer-to-peer fashion for such things as collision avoidance.

In the embodiment of the invention described in FIGS. **1** through **8** herein, the description refers generally to the fixed drive unit embodiment. FIGS. **9** through **15** refer generally to the detachable drive unit embodiment.

Referring now to FIGS. **9A–9C** there is shown a side view and first and second perspective views of movable inventory trays and detachable mobile drive units according to one embodiment of the present invention. The movable inventory trays or "pods" **301**, **302**, and **303** are designed so that they may be moved about on a factory floor or other type of surface by detachable, mobile drive units **304**, **305**, and **306**. The mobile drive units **304**, **305**, and **306** may use a docking mechanism to dock to base trays **301**, **307**, and **308** of the movable inventory pods **301**, **302**, and **303**, using a docking mechanism (not shown in this view) located on the bottom of the base trays **301**, **307**, and **308**. Although the embodiments illustrated by FIGS. **9A–9C** show the mobile drive units **304** and **306** docked to the base **301**, **307**, and **308**, a whole variety of docking mechanisms may be employed.

The control units for the mobile drive units **304**, **305**, and **306** may be contained within a housing **320** secured to the mobile drive units **304**, **305**, and **306** by conventional means. The control unit may be implemented as a microcontroller-based device, or other electromechanical system and may contain the components described in FIG. **3** herein. As is described in more detail in FIG. **3**, the control unit for each mobile drive unit **304**, **305**, and **306** includes a communication link coupled to a processor and a power unit coupled to a drive mechanism configured to move the mobile drive units about the warehouse in response to control signals of the processor. The mobile drive units **304**, **305**, and **306**, receive command signals via this communication link. For example, the command signals may be transmitted by one or more pack stations (not shown in the view) responsive to an order request issued by the MHS.

The movable inventory pods **301**, **302**, and **303**, are simply stationary units on casters **310**, **311**, **312**, etc., that do not have the drive capability and control electronics necessary to move about on the factory floor without the assistance of the mobile drive units **304**, **305**, and **306**. As in the previous embodiments disclosed herein, casters **310**, **311**, **312**, etc., roll freely and balance the movable inventory pods **301**, **302**, and **303** as they are moved along a floor surface by the driving wheels **313**, **314**, etc., of the mobile drive units **304**, **305**, and **306**. In other embodiments, casters **310**, **311**, **312**, etc., may be replaced by fixed wheels, roller ball-type bearings or other conventional means for rolling the movable inventory pods across a floor.

The mobile drive units **304**, **305**, and **306** navigate the factory floor autonomously using information obtained from their on-board GPS and RF communication systems in an exemplary embodiment. The autonomous mobile drive units **304**, **305**, and **306**, integrate with a MHS in the same way that the mobile inventory trays communicate with the MHS, except that the mobile drive units **304**, **305**, and **306** may contain additional RAM or other storage and computational circuits to perform more extensive calculations and docking procedures.

The movable inventory pods **301**, **302**, and **303** may be configured as vertically stackable trays, with each stackable tray **321**, **322**, etc., joined in an interlocked stack to create the pod. The stack height of the stackable trays is limited by the material and structural characteristics of the base trays **301**, **307**, and **308**, operator picking ergonomics and the ability of the mobile drive units **304**, **305**, and **306** to effectively transport the movable inventory pods **301**, **302**, and **303** on the factory floor. Each stackable tray **321**, **322**, etc., may be further sub-divided into bins **323**, **324**, **325**, etc., for the storage of small parts and/or slow-moving products that require only a few units of inventory. The partitions **326**, **327**, etc., creating the bins **323**, **324**, **325**, etc., may be removable and reconfigurable. In addition, the movable inventory pods **301**, **302**, and **303** may have molded parts made of plastic or some other suitable material conventionally designed to facilitate positive locating, docking of the mobile drive units **304**, **305**, and **306**, and transfer of force during movement on the factory floor.

Referring now to FIG. **10** there is shown a top view showing movable inventory pods arranged in a virtual cellular grid with support lanes and queue locations on a factory floor according to one embodiment of the present invention. The movable inventory pods **351** may be organized in a virtual grid **360** on the factory floor **390** so that they may be easily located by the mobile drive units **361**. The position of the movable inventory pods **351** on the factory floor, however, are not typically predetermined or fixed by a system computer/controller. Mobile drive units will typically store pods in the closest available storage grid from their current location without regard to any overall inventory layout plan. At other times, the system controller may direct a mobile drive unit to move a pod to a location farther from the pack stations since it does not get called upon frequently for example. The term "virtual" is used to indicate that the grid is only a mathematical construct and that no markings, guides, or fixed hardware is used on the active factory floor area. There may be many more movable inventory pods **351** than mobile drive units **361** located on a given factory floor. For example, there may be 10,000 movable inventory pods on a factory floor and only 2,000 mobile drive units. This configuration achieves a high inventory storage density while using few mobile drive units. Of course, the ratio of movable inventory pods to mobile drive units may vary depending on the configuration and requirements of the operation.

Movable inventory pods **351** dwell in storage grids **360** on the active factory floor **390**. The mobile drive units **361** are located in random locations on the factory floor **390** and may communicate with each other and with the MHS **400** wirelessly about the movable inventory pods **351** they are carrying and about the moves they are making. The mobile drive units **361** may also communicate position coordinates and/or changes in the storage locations of the movable inventory pods **351** on the factory floor **390** to peer mobile drive units, such that all of the mobile drive units **361** on the factory floor **390** may receive and store the changing coordinates of the movable inventory pods **351**. In this way, the mobile drive units **361** keep a mental mapping of the current

position of all inventory on the active floor area. In the alternative, the mobile drive units **361** may communicate changes and/or position coordinates of movable inventory pods **351** directly to the MHS **400** via the wireless network **410**. The MHS **400** may then, in turn, inform all of the mobile drive units **361** about these changes and/or position coordinates via the wireless network **410** and may store this location information in a central MHS database.

If a movable inventory pod contains an item(s) needed by one of the pack stations **395** a pack station computer **450** chooses an appropriate mobile drive unit to transport the movable inventory pod to the pack station so that an operator may remove the requested item(s) from the movable inventory pod. As multiple orders are processed, mobile drive units docked to movable inventory pods **380** form orderly queues **401** at the pack stations **395** by communicating with each other globally via the wireless network **410** and locally via built-in infrared (IR) type communications. In this manner, movable inventory pods **380** may reorganize such that earlier order requests may move ahead in the queues. The mobile drive units docked to movable inventory pods **380** may rotate to orient the movable inventory pods accordingly to assist operators at the pack stations **395** in locating the correct item(s) of inventory.

Once an item(s) of inventory has been removed from a movable inventory pod and scanned across a barcode scanner attached to the pack station computer **450**, the pack station computer notifies that mobile drive unit docked to a movable inventory pod **380** through a wireless communication that it is free to return the movable inventory pod to the closest possible available storage location among the storage grids **360** located on the factory floor **390**. In this manner, the item(s) of inventory that are most commonly requested migrate to the front areas of the factory floor **390**, maximizing the efficiency of the material handling system.

Mobile drive units docked to empty movable inventory pods **380**, or pods containing at least one empty bin, and/or docked to movable inventory pods that may need particular item(s) of inventory to be replenished form orderly queues **415** and **416** along the sides of the factory floor area **390** to await the assignment and loading of new item(s) of inventory at check-in stations **460**. Empty movable inventory pods **380** may accept any new item(s) of inventory that the operators at the check-in stations **460** see fit. Empty movable inventory pods **380** are not dedicated to particular item(s) of inventory. An operator at the check-in stations **460** may use a barcode scanner or some other device attached to computers **465** at the check-in stations **460** to scan and identify an item(s) of inventory and to scan the movable inventory pod/bin to make the association as the item is being placed in a movable inventory pod. An operator at the check-in stations **460** may indicate the quantity of the item(s) being placed in the movable inventory pod. The computers **465** at the check-in stations **460** may communicate wirelessly with mobile drive units transporting the movable inventory pods as to when to move into and out of the check-in stations **460** to replenish empty movable inventory pods **380**. In addition, once the check-in process is completed, the computers **465** at the check-in stations transmit the type and quantity of units of inventory loaded on to the movable inventory pods **380** and other types of information as needed to the MHS **400** and/or to all of the mobile drive units on the factory floor **390** using the wireless network **410**.

Each movable inventory pod **351** may contain an embedded wireless RFID chip or some other form of identification that may be used to uniquely identify that movable inventory pod and the item(s) of inventory contained by the movable inventory pod among the thousands of movable inventory pods **351** on the factory floor **390**. When the check-in operation is complete, the check-in station computer **465** may wirelessly notify the mobile drive unit that it is free to move the movable inventory pod back to the storage grids **360** located on the factory floor **390**. At this point, the mobile drive units are free to transport the movable inventory pods **380** back to the closest available storage location in the storage grids **360**.

The mobile drive units **361** may move movable inventory pods **351** to the check-in stations **460** via a response to a wireless request by the computers **465** at the check-in stations. Alternatively, after the mobile drive units docked to the movable inventory pods **380** at the pack stations **395** have dropped off the item(s) of inventory, they may move immediately to check-in stations **460** if the mobile drive units determine that bins in the movable inventory pods are empty and/or have depleted to a certain predetermined level.

In yet another embodiment, a centralized computer, such as the MHS **400**, may track the position coordinates of the movable inventory pods **380** and the mobile drive units **361** using the wireless network. The MHS **400** may also store information about the particular items of inventory contained in each movable inventory pod in memory, or a central database. For example, the MHS **400** may receive an order request for an item of inventory. Instead of transmitting this request to a pack station computer **450**, the MHS **400** may itself use algorithms and software processes to select a particular mobile drive unit **361** to fulfill the order request at a particular pack station **395**. The algorithm may instruct the MHS **400** to choose the mobile drive unit **361** to fulfill the order request based on the proximity of a mobile drive unit **361** to a particular movable inventory pod **380** that contains the item of inventory in the order request. Other types of algorithms may be used to determine the mobile drive unit **361** selection processes. It should also be appreciated that the MHS **400** may also select the particular pack station **395** based on an algorithm. The pack station **395** may be selected either before or after the MHS **400** selects the mobile drive unit **361** to fulfill the order.

MHS **400** may transmit the request to the mobile drive unit **361** using the wireless network **410**. The mobile drive unit **361** then transports the movable inventory pod **380** to the pack station **395** to fulfill the order request. The mobile drive unit **361** may move under its own direction using its control electronics as previously described herein. Mobile drive unit **361** may still communicate with peer mobile drive units for various purposes. For example, peer-to-peer communication between mobile drive units **361** may be utilized to avoid congestion on the factory floor **390** and/or to effectively navigate into queuing positions **401** at pack stations **395** and/or check-in stations **460**.

Once an item of inventory has been removed from the movable inventory pod **380** at the pack station **395**, mobile drive unit **361** may be notified, either by a computer **450** at pack station **395** or by MHS **400**, that it is free to return movable inventory pod **380** to a storage location in virtual grid **360** of factory floor **390**. MHS **400** may determine an optimum location for movable inventory pod **380** on factory floor **390**. For example, MHS **400** may plan and optimize storage by directing the movement of less utilized movable inventory pods **380** to locations farther away from pack stations **395** and check-in stations **460**.

MHS **400** may also be used to control and direct requests for the replenishment of items of inventory. These requests may be transmitted wirelessly to MHS **400** from check-in

station computers **465** or may come from the WMS (not shown). MHS **400** may determine an appropriate mobile drive unit **361** and movable inventory pod **380** to fulfill the order according to an algorithm or by some other method. Once MHS **400** selects the mobile drive unit **361** to fulfill the order, the mobile drive unit **361** moves an empty movable inventory pod **380** to the appropriate check-in station **460**. After the item of inventory has been replenished, mobile drive unit **361** may be instructed by the MHS **400** to return the movable inventory pod **380** back to virtual grid **360** in the manner described herein.

MHS **400** may continually poll the entire population of mobile drive units **361** for position coordinate information using the wireless network. In addition, each mobile drive unit may transmit its position coordinates in regular intervals, for example every minute, to MHS **400** using the wireless network. In this manner, MHS **400** can maintain current location information about mobile drive units **361** and movable inventory pods **380** and may determine the most efficient mobile drive units **361** to fulfill each order request.

Referring now to FIG. **11** there is shown a three-part movable inventory pod including a base tray, a stack tray, and a mobile drive unit according to one embodiment of the present invention. A base tray **510** is used in the first (lowest) position. The base tray **510** includes casters **511–513**, and interfaces with the mobile drive unit **520**. Base tray **510** may also include an RFID chip **540** embedded in base tray **510**. Mobile drive unit **520** docks to base tray **510** to move the movable inventory pod through specific inventory tasks and to release the movable inventory pod back into storage locations. Mobile drive unit **520** interrogates the RFID chip **540** during docking to ensure pick up of the correct movable inventory pod. Moreover, when mobile drive unit **520** is docked to the movable inventory pod, mobile drive unit **520** identifies the orientation of all of the "pickable" openings **531**, **532**, etc., in the movable inventory pod such that it can align the correct opening **531**, **532**, etc., toward the operator in the pack stations and/or check-in stations. A stack tray unit **530** is designed to sit on top of base tray **510** and/or other stack trays, thus creating movable inventory pods with multiple stackable trays. The stack trays may also include RFID chips for unique identification by the mobile drive units.

Referring now to FIG. **12** there is shown a mobile drive unit docked to a base tray according to one embodiment of the present invention. In this particular embodiment, as the movable inventory pod **550** moves along a factory floor **555** it occupies a path three feet wide. The inner diameter of the storage compartment **551** may be slightly smaller than the three-foot outer diameter based on the wall **552** thickness. The storage compartment height of the base tray may be 15 inches. This particular geometry yields a payload capacity of approximately 14,800 cubic inches in this particular embodiment.

The height of the base tray **550** above the factory floor **555** determines the location of the pick openings and thus the reaching and bending of the operators at the pack stations and/or check-in stations. With a floor clearance between 15 and 26 inches above the surface of the factory floor **555**, and a pod consisting of 2 or 3 trays, a top pick opening may typically be between 49 and 60 inches. The openings may be 15 inches wide by 11 inches tall. This particular movable inventory pod **550** may accept up to 200 pounds of inventory. Items of inventory may range from very small objects, such as a pack of gum or nail polish, to larger items such as an eight-pack of paper towels or a VCR. Other embodiments may utilize trays in very different configurations, designed for vastly different payloads.

Referring now to FIG. **13** there is shown a flow chart illustrating a mobile drive unit selection process to fill an order request according to one embodiment of the present invention. An order is transmitted from a WMS to the MHS (block **601**). The MHS then relays the order to a pack station computer (block **602**) according to specified load leveling algorithms. The pack station computer transmits the order request for items of inventory to the entire population of mobile drive units located on the factory floor via the wireless network (block **603**). The mobile drive units respond to the order request with bids that represent the amount of time each mobile drive unit calculates it would take to deliver the requested item (block **604**). If the packs station computer receives bids from one or more mobile drive units (block **605**), the pack station computer will fill the request by selecting the mobile drive unit that bids the shortest amount of time (block **606**). A winning bidder message is broadcast back to the entire mobile drive unit population by the pack station controller (block **607**) such that the losing mobile drive units may delete the open bid and respond to other requests. This process may be handled in an alternative fashion whereby the MHS maintains the status of all mobile drive units and movable inventory pods and centrally calculates and assigns mobile drive unit activities to include which drive is to transport which pod from which location and later, into which location to replace the pod.

If the pack station computer does not receive a bid from one or more mobile drive units (block **608**), this means there are no idle mobile drive units available. The pack station computer will then queue the request internally until it hears from an idle mobile drive unit (block **609**). When a mobile drive unit becomes idle, it will broadcast that message to the pack station computers in the event that there is an open item request requiring a mobile drive unit (block **610**). All pack station computers that have work bid for the use of the mobile drive unit (block **611**). The mobile drive unit selects the winning pack station based on the age of the request (block **612**) or by some other selection formula.

Referring now to FIG. **14** there is shown a flow chart illustrating an order fill process using autonomous mobile drive units and movable inventory pods according to one embodiment of the present invention. Once a mobile drive unit has been notified that it has been selected by a pack station computer to fill an order request, the mobile drive unit reserves that movable inventory pod with a wireless message to peer drive units and moves to the location of the movable inventory pod containing the requested item(s) of inventory (block **620**) and docks with the movable inventory pod (**621**). The peer mobile drive units update there maps in RAM with this information (block **622**) at this point, or earlier when the reservation was made against the movable inventory pod. The mobile drive unit moves to the pack station with the movable inventory pod (block **623**). An operator at the pack station removes the item(s) of inventory from the movable inventory pod.

Once the item(s) have been scanned by the operator, the mobile drive unit docked to the movable inventory pod is released from the pack station (block **624**). Using its internal map of open storage locations in the storage grid, the mobile drive unit reserves an open storage location with a wireless message to peer mobile drive units, then proceeds to that location and undocks from the movable inventory pod (block **625**) and upon completion notifies the peer mobile drive units of the new storage location of the movable inventory pod (block **626**).

Referring now to FIG. **15** there is shown a flow chart illustrating an inventory replenishment process using autonomous mobile drive units and movable inventory pods according to one embodiment of the present invention. A request for a movable inventory pod containing at least one empty bin to be transported to a check-in station is transmitted by a check-in station computer to all of the mobile drive units currently docked to pods containing an empty bin and located in the check-in queue lanes on either side of the factory floor (block **630**). The oldest mobile drive unit in the queue lanes responds to the request by moving to the check-in station (block **631**). An operator at the check-in station supplies an empty bin in the movable inventory pod with item(s) of inventory (block **632**) and the check-in station computer then notifies the mobile drive unit that it is free to move the replenished movable inventory pod back to the factory floor (block **633**). The mobile drive unit transports the replenished movable inventory pod to the closest available place in the storage grid on the factory floor (block **634**) and wirelessly transmits to the MHS and peer drive units the new location of the movable inventory pod (block **635**).

In the foregoing, a material handling system and method using autonomous mobile drive units and movable inventory pods has been disclosed. Although the present invention has been described with reference to specific exemplary embodiments, it should be understood that numerous changes in the disclosed embodiments can be made in accordance with the disclosure herein without departing from the spirit and scope of the invention. The preceding description, therefore, is not meant to limit the scope of the invention. Rather, the scope of the invention is to be determined only by the appended claims and their equivalent.

I claim:

1. A method for managing items of inventory in a warehouse comprising:

sending a request signal from a computer, the request signal specifying an item of inventory;

receiving the request signal by a mobile drive unit (MDU), the MDU responding to the request signal by:

determining a location of a movable inventory pod (MIP) that contains the item of inventory;

energizing a drive mechanism of the MDU to move the MDU to the location of the MIP;

docking the MDU to the MIP;

energizing the drive mechanism of the MDU to transport the MIP to a station of the warehouse.

2. The method of claim **1** wherein the station comprises a pack station.

3. The method of claim **1** wherein the MIP comprises one of a plurality of MIPs located in the warehouse.

4. The method of claim **1** wherein sending is performed via wireless transmission.

5. The method of claim **1** wherein the MDU comprises a random-access memory (RAM) that stores data that includes position coordinates of the MIPs and the items of inventory contained in the MIPs.

6. The method of claim **5** wherein the MDU further comprises a processor used to calculate movements and process communication messages.

7. The method of claim **1** further comprising:

generating position signals by a guidance system of the MDU; and

navigating a path to the MIP using the position signals.

8. The method of claim **7** further comprising navigating a path to the station using the position signals generated by the guidance system.

9. The method of claim **1** further comprising storing the items of inventory in a plurality of MIPs located in the warehouse.

10. The method of claim **1** wherein the MIPs are configured as vertically stackable trays, each tray containing one or more items of inventory.

11. The method of claim **10** wherein each tray may be subdivided into bins.

12. The method of claim **1** further comprising:

storing the plurality of MIPs in a virtual grid on a floor of the warehouse;

embedding a radio frequency identification (RFID) chip in each of the MIPs, the RFID chip identifying a unique MIP and the items of inventory contained in each MIP.

13. A computerized method for managing items of inventory in a warehouse comprising:

transmitting a request signal from a computer, the request signal specifying an order for an item of inventory;

receiving the request signal by a plurality of mobile drive units (MDUs) located in the warehouse, each of the MDUs including a processor coupled to a random-access memory (RAM) that stores position coordinates of a plurality of movable inventory pods (MIPs) and a list of inventory items contained in each of the MIPs;

selecting a particular MDU to fulfill the order;

driving the MDU to the location of a MIP that contains the item of inventory;

docking the particular MDU with the MIP;

driving the particular MDU to transport the MIP to a pack station.

14. The computerized method of claim **13** wherein the selecting of a particular MDU comprises:

determining by each of the MDUs an estimated time duration to transport a movable inventory pod containing the item specified in the order to the pack station.

15. The computerized method of claim **14** further comprising:

transmitting by each of the MDUs, the estimated time duration to the pack station; and

identifying the particular MDU to fulfill the order request based on a shortest estimated time duration.

16. The computerized method of claim **13** further comprising:

transmitting an availability signal to the pack station.

17. The computerized method of claim **13** wherein the pack station comprises one of a plurality of pack stations, each of which transmits request signals specifying an order for items of inventory to the MDUs, and further comprising:

selecting, by an idle MDU an order from a particular pack station according to a priority algorithm.

18. The computerized method of claim **13** wherein the transmitting is performed via wireless transmission.

19. The computerized method of claim **13** wherein the MDU comprises a random-access memory (RAM) that stores data that includes position coordinates of the MIPs and the items of inventory contained in the MIPs.

20. The computerized method of claim **19** wherein the MDU further comprises a processor used to calculate movements and process communication messages.

21. The computerized method of claim **13** further comprising:

generating position signals by a guidance system of the MDU; and

navigating a path to the MIP using the position signals.

22. The computerized method of claim 21 further comprising navigating a path to the pack station using the position signals generated by the guidance system.

23. The computerized method of claim 13 further comprising storing the items of inventory in a plurality of MIPs located in the warehouse.

24. The computerized method of claim 13 wherein the MIPs are configured as vertically stackable trays, each tray containing one or more items of inventory.

25. The computerized method of claim 13 further comprising:

storing the plurality of MIPs in a virtual grid on a floor of the warehouse;

embedding a radio frequency identification (RFID) chip in each of the MIPs, the RFID chip identifying a unique MIP and the items of inventory contained in each MIP.

26. The computerized method of claim 13 further comprising:

removing the item of inventory from the MIP at the pack station;

moving the MDU to return the MIP to an available storage location;

returning the MIP to an available storage location in the warehouse;

undocking the MDU from the MIP.

27. The computerized method of claim 13 further comprising:

moving the MDU to a check-in station;

replenishing items of inventory to the MIP at the check-in station;

returning the MIP to an available storage location in the warehouse;

undocking the MDU from the MIP.

28. A method for managing items of inventory in a warehouse comprising:

sending a request signal from a Material Handling System (MHS) to a computer at a pack station in a warehouse, the request signal specifying an item of inventory;

receiving the request signal by a plurality of mobile drive units (MDUs) located in the warehouse, each of the MDUs including a processor coupled to a random access memory (RAM) that stores position coordinates of a plurality of movable inventory prods (MIPs) and a list of inventory items contained in each of the MIPs;

determining by each of the MDUs an estimated time duration to transport a MIP containing the item specified in the request signal;

selecting by the computer at the pack station a MDU to fulfill the order based on the shortest estimated time duration;

driving the MDU to the location of a MIP that contains the item of inventory;

docking the MDU with the MIP;

driving the MDU to transport the MIP to a pack station.

29. The method of claim 28 wherein the selecting is performed via wireless transmission.

30. The method of claim 28 wherein the pack station comprises one of a plurality of pack stations, a computer at each of the pack stations transmitting a request signal to the plurality of MDUs via wireless transmission.

31. The method of claim 28 wherein the MDU comprises a random-access memory (RAM) that stores data that includes position coordinates of the MIPs and the items of inventory contained in the MIPs.

32. The method of claim 28 wherein the MDU further comprises a processor used to calculate movements and process communication messages.

33. The method of claim 28 wherein the MIPs are configured as vertically stackable trays, each tray containing one or more items of inventory.

34. The method of claim 28 further comprising:

generating position signals by a guidance system of the MDU; and

navigating a path to the MIP using the position signals.

35. The method of claim 34 further comprising navigating a path to the pack station using the position signals generated by the guidance system.

36. The method of claim 28 further comprising:

storing the plurality of MIPs in a virtual grid on a floor of the warehouse;

embedding a radio frequency identification (RFID) chip in each of the MIPs, the RFID chip identifying a unique MIP and the items of inventory contained in each MIP.

37. The method of claim 28 further comprising:

removing the item of inventory from the MIP at the pack station;

moving the MDU to return the MIP to an available storage location;

returning the MIP to an available storage location in the warehouse;

undocking the MDU from the MIP.

38. The method of claim 28 further comprising:

moving the MDU to a check-in station;

replenishing items of inventory to the MIP at the check-in station;

returning the MIP to an available storage location at the warehouse;

undocking the MDU from the MIP.

39. The method of claim 28 further comprising communicating information among peer MDUs using the wireless network.

40. The method of claim 39 wherein the information includes coordinate information for each of the MDUs and information about inventory items stored in particular MIPs.

41. The method of claim 28 further comprising transmitting information to the MHS by one or more of the MDUs using the wireless network, the information including coordinate information for each of the MDUs and information about inventory items stored in particular MIPs.

42. The method of claim 41 further comprising:

receiving the information by the MHS; and

transmitting the information received from the one or more of the MDUs to the plurality of the MDUs using the wireless network.

43. A computer-implemented method for managing items of inventory in a warehouse comprising:

transmitting position coordinates of one or more movable inventory pods (MIPs) and one or more mobile drive units (MDUs) to a computer;

receiving, by the computer, an order request for an item of inventory;

selecting, by the computer, a particular MDU to fulfill the order request;

transmitting the order request to the particular MDU;

docking the particular MDU to an MIP containing the item of inventory; and

moving, by self-power of the particular MDU, the MIP to a pack station located in the warehouse.

44. The method of claim **43** wherein transmitting the order request is performed via wireless transmission.

45. The method of claim **43** wherein selecting a particular MDU from the one or more MDUs is performed via a software algorithm in the computer.

46. The method of claim **43** further comprising:

receiving information by a particular MDU from an RFID chip embedded in each MIP, the information identifying items of inventory contained by each MIP; and

transmitting the information by the MDU to the computer via a wireless network.

47. The method of claim **43** further comprising:

removing the item of inventory from the MIP at the pack station;

directing the MDU to return the MIP to an available storage location;

returning the MIP to an available storage location in the warehouse;

undocking the MDU from the MIP.

48. The method of claim **43** further comprising storing the MIPs in a virtual grid on a factory floor.

49. The method of claim **48** wherein the returning of the MIP to an available storage location comprises determining an optimum storage location for the MIP in the virtual grid according to an algorithm stored in the computer.

50. The method of claim **43** further comprising:

receiving a request to replenish an item of inventory by the computer;

transmitting the request to a MDU selected by the computer;

moving the MDU to a check-in station; and

replenishing the item of inventory in a MIP docked to the MDU at the check-in station.

51. The method of claim **43** further comprising communicating in a peer-to-peer fashion between each of the MDUs to form queues and to avoid traffic congestion on a factory floor.

52. The method of claim **43** further comprising polling the one or more MDUs on a continual basis to determine updated position coordinates of the MDUs.

53. The method of claim **43** further comprising transmitting the location of each MDU by each MDU in regular intervals to the computer to maintain updated position coordinates of each of the MDUs.

* * * * *