US 20030151679A1

(19) United States

(12) Patent Application Publication

(10) Pub. No.: US 2003/0151679 A1

(43) Pub. Date: Aug. 14, 2003

Amerson et al.

(54) SYSTEM AND METHOD FOR USING MULTIPLE IMAGES IN A DIGITAL IMAGE CAPTURE DEVICE

(76) Inventors: **Frederic C. Amerson**, Los Altos, CA (US); **Paul M. Hubel**, Mt. View, CA (US); **Donald J. Stavely**, Windsor, CO (US); **Charles H. McConica**, Corvallis, OR (US); **K. Douglas Gennetten**, Ft. Collins, CO (US); **Susan Hunter**, Fort Collins, CO (US); **David K. Campbell**, Loveland, CO (US)

Correspondence Address:
HEWLETT-PACKARD COMPANY
Intellectual Property Administration
P.O. Box 272400
Fort Collins, CO 80527-2400 (US)

(21) Appl. No.: **10/071,026**

(22) Filed: **Feb. 8, 2002**

Publication Classification

(51) **Int. Cl.**[7] **H04N 5/76**

(52) **U.S. Cl.** **348/231.6**

(57) **ABSTRACT**

A digital image capture and processing system, comprising a lens coupled to a lens control element is disclosed. The image capture system includes an image sensor configured to capture images from the lens, and a memory element and a processor coupled to the lens control element. The memory element includes image capture software, where the image capture software causes the lens and the image sensor to capture at least two images, each of the at least two images captured using a varying parameter and stored as a single file where the at least two images are combined to form a new image having at least one characteristic different from corresponding characteristics of the at least two images.

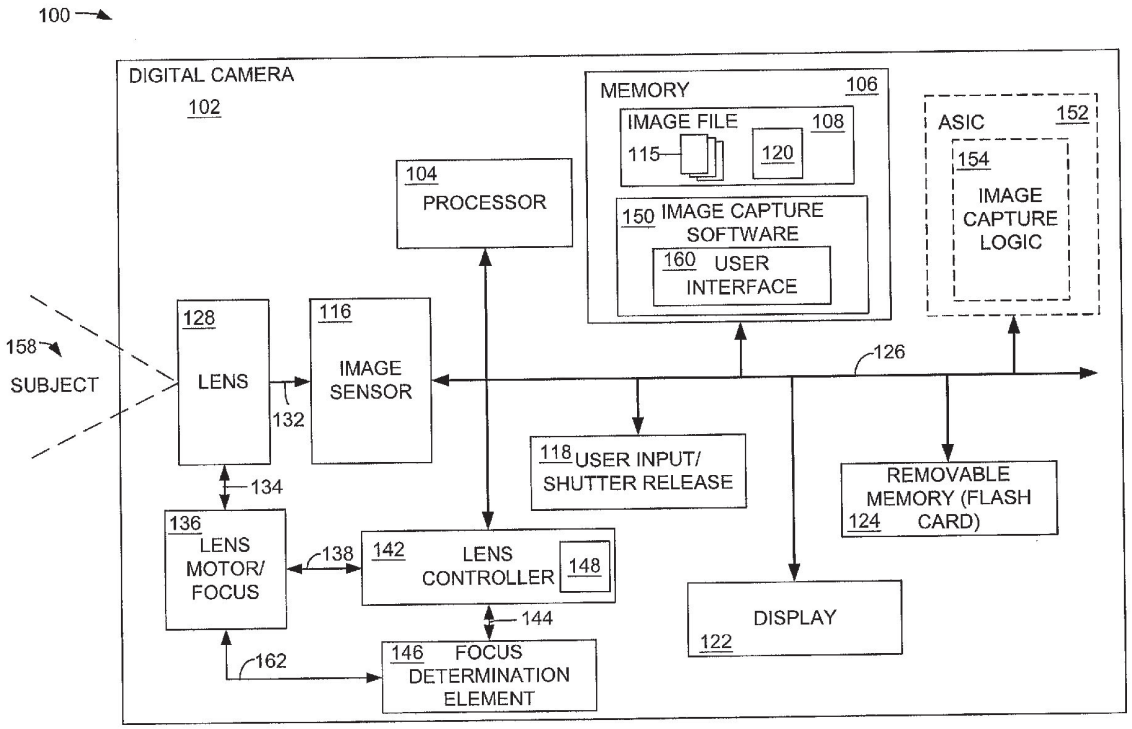

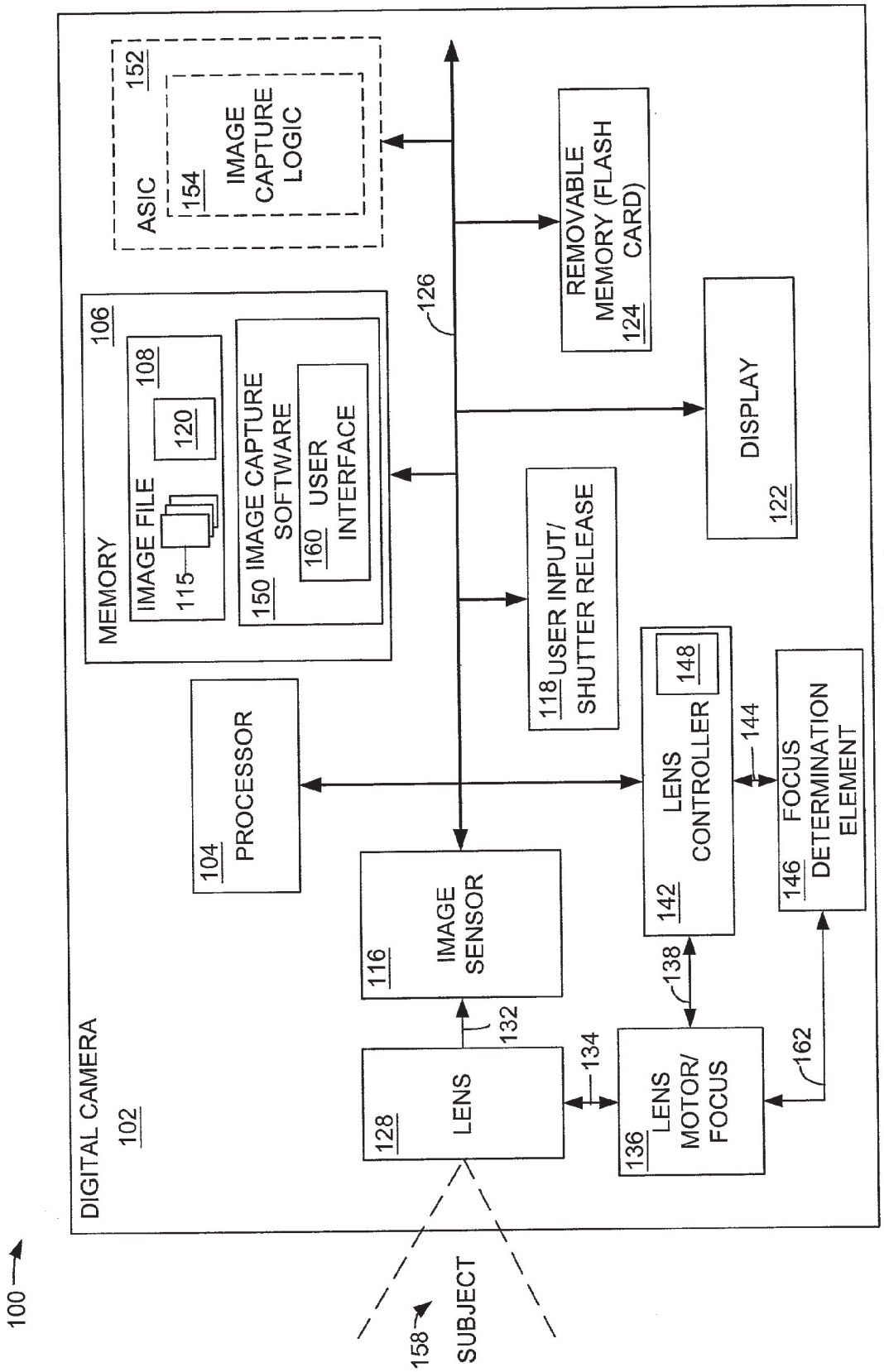
100
DIGITAL CAMERA
102
ASIC
152
154
IMAGE CAPTURE LOGIC
MEMORY
106
IMAGE FILE
108
115
120
150 IMAGE CAPTURE SOFTWARE
160 USER INTERFACE
126
REMOVABLE MEMORY (FLASH CARD)
124
DISPLAY
122
118 USER INPUT/ SHUTTER RELEASE
104 PROCESSOR
116 IMAGE SENSOR
LENS CONTROLLER
142
148
144
FOCUS DETERMINATION ELEMENT
146
128 LENS
132
134
138
LENS MOTOR/ FOCUS
136
162
158
SUBJECT

FIG. 1

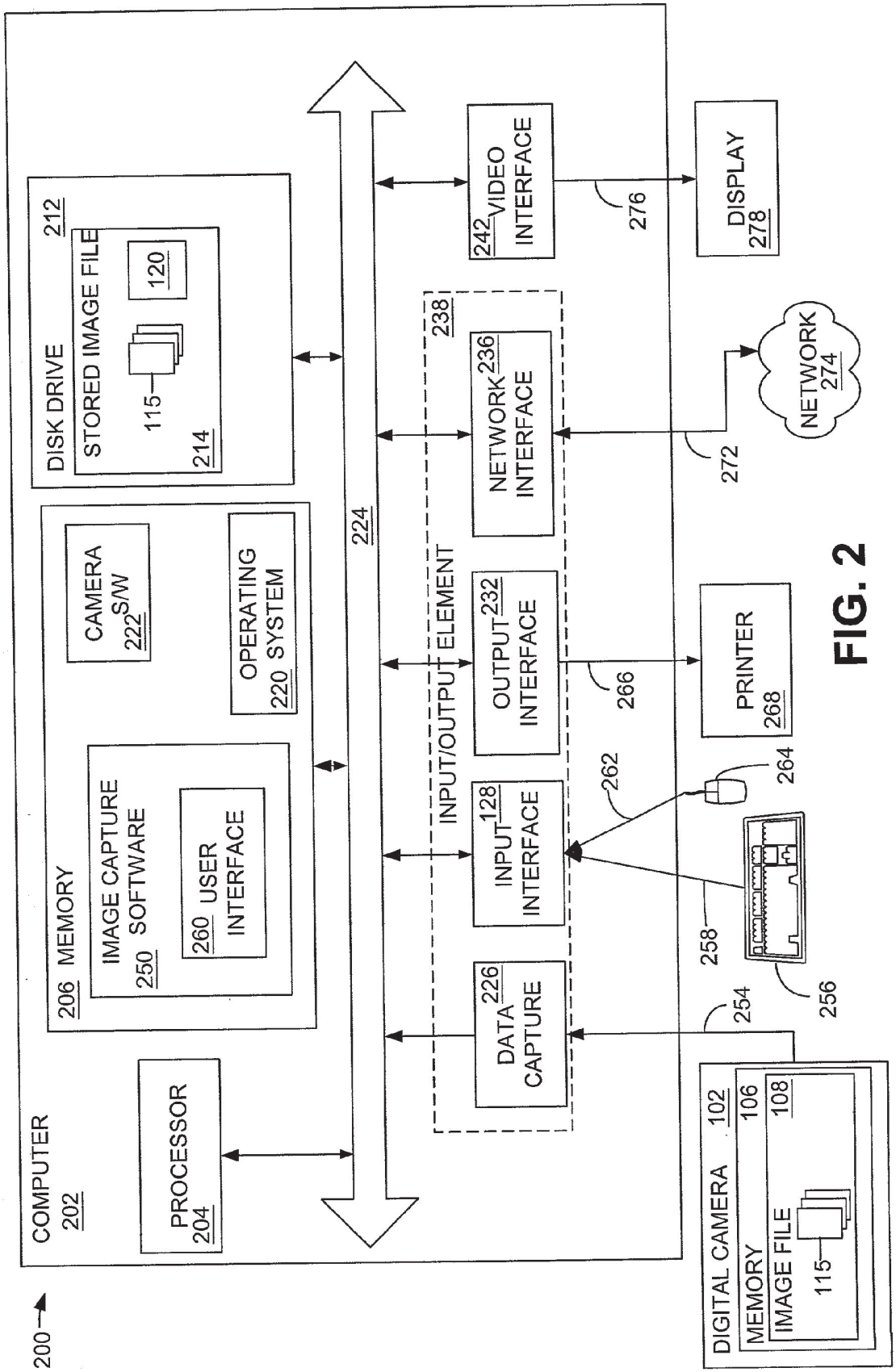
200
COMPUTER
202
PROCESSOR
204
206 MEMORY
IMAGE CAPTURE SOFTWARE
250
260 USER INTERFACE
CAMERA S/W
222
OPERATING SYSTEM
220
DISK DRIVE
212
STORED IMAGE FILE
214
115
120
224
INPUT/OUTPUT ELEMENT
238
DATA CAPTURE
226
INPUT INTERFACE
128
OUTPUT INTERFACE
232
NETWORK INTERFACE
236
VIDEO INTERFACE
242
DISPLAY
278
276
NETWORK
274
272
PRINTER
268
266
262
264
258
256
254
DIGITAL CAMERA
102
MEMORY
106
IMAGE FILE
108
115

FIG. 2

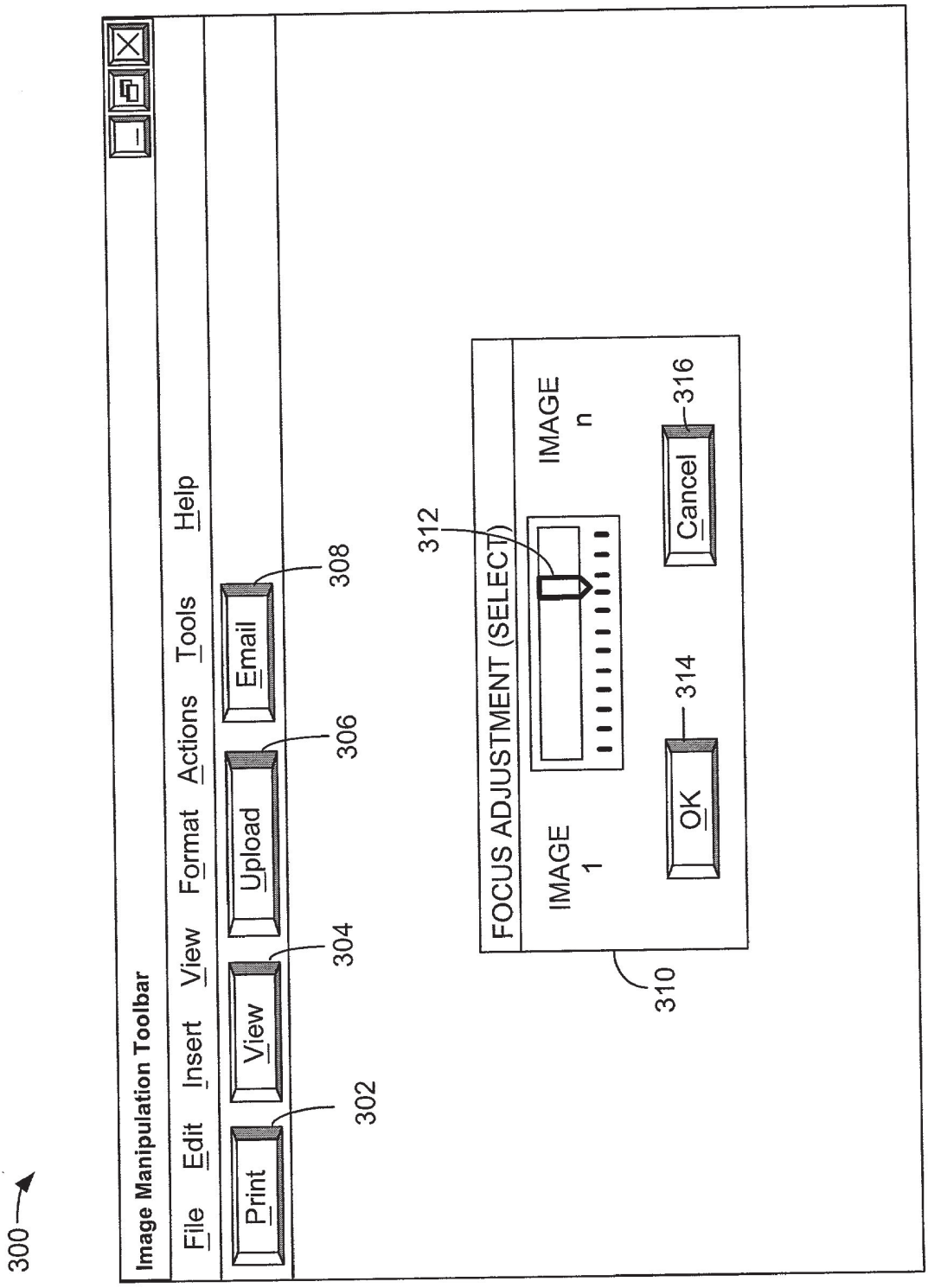
300
Image Manipulation Toolbar
File
Edit
Insert
View
Format
Actions
Tools
Help
Print
View
Upload
Email
302
304
306
308
FOCUS ADJUSTMENT (SELECT)
IMAGE 1
IMAGE n
OK
Cancel
310
312
314
316

FIG. 3

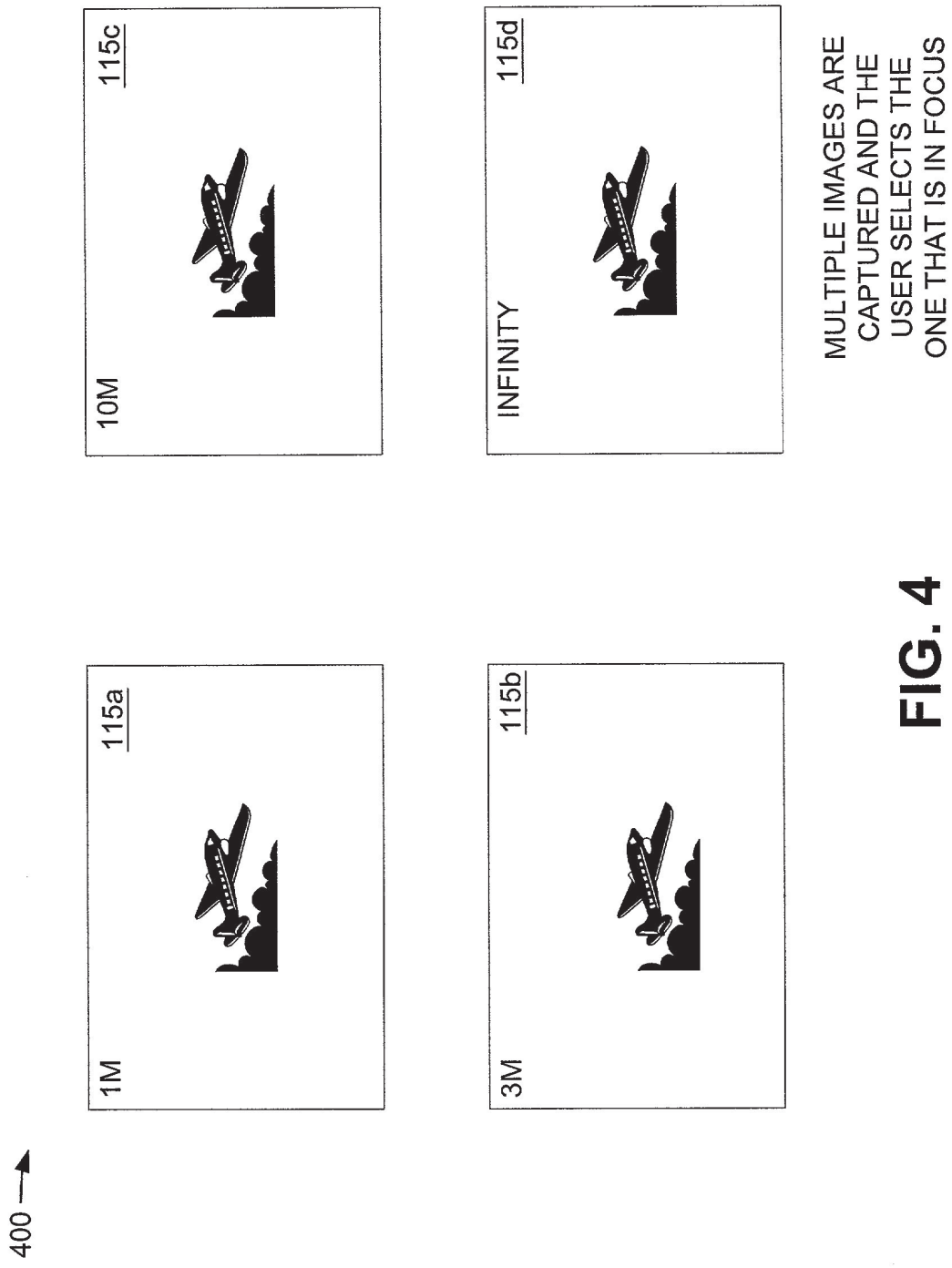
400
1M
115a
3M
115b
10M
115c
INFINITY
115d
MULTIPLE IMAGES ARE CAPTURED AND THE USER SELECTS THE ONE THAT IS IN FOCUS

FIG. 4

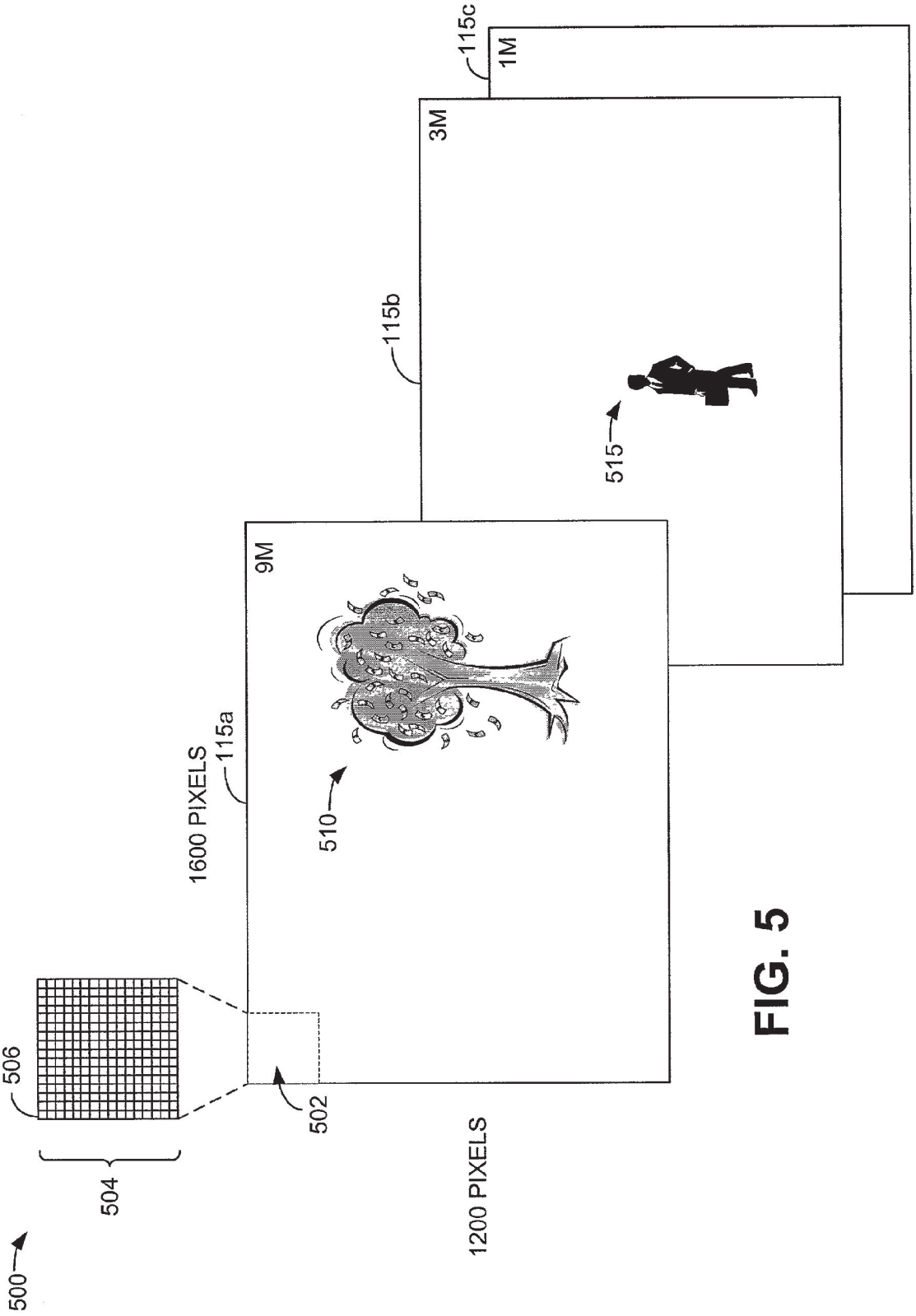
500
506
504
502
1600 PIXELS
115a
9M
510
1200 PIXELS
115b
3M
515
115c
1M

FIG. 5

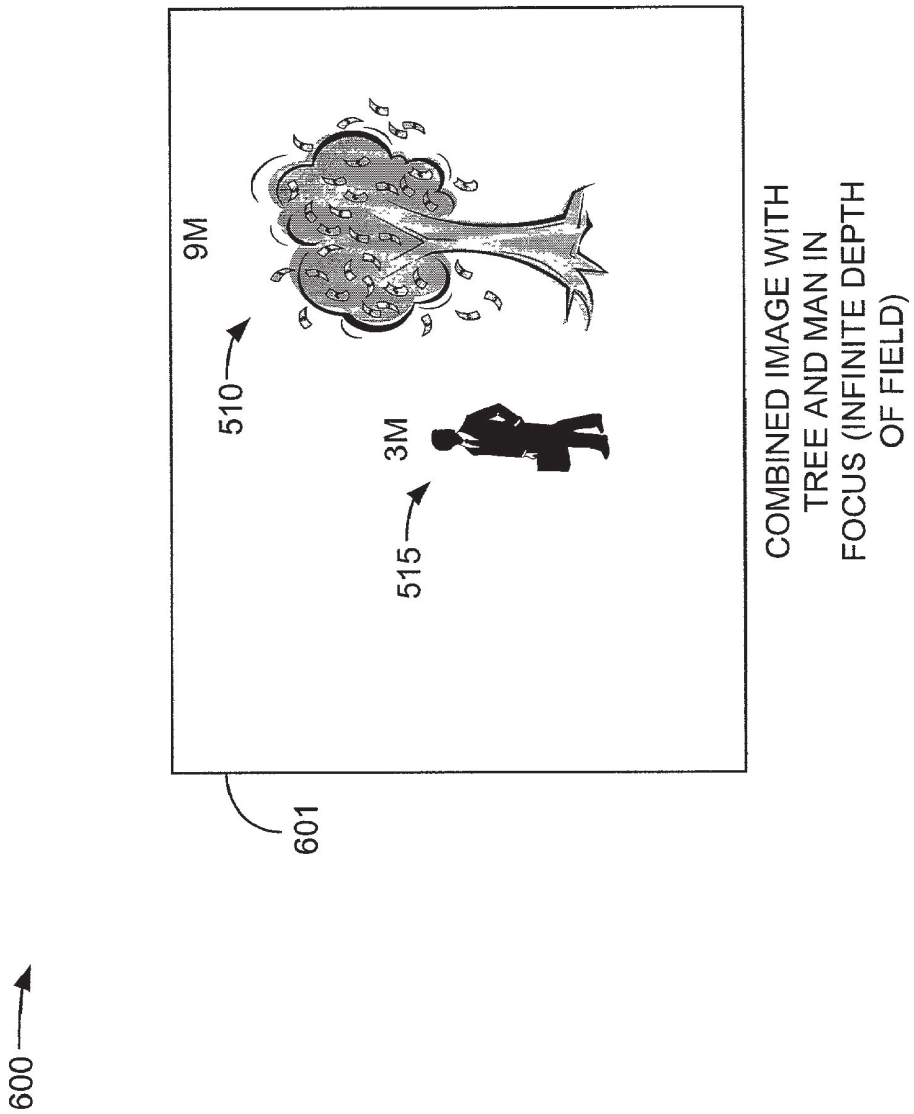
600
601
9M
510
3M
515
COMBINED IMAGE WITH
TREE AND MAN IN
FOCUS (INFINITE DEPTH
OF FIELD)

FIG. 6

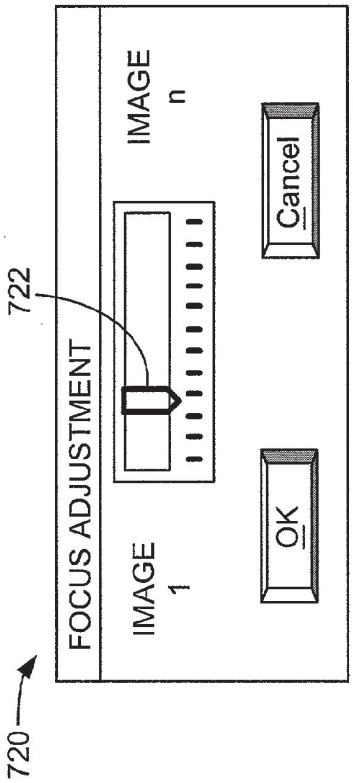

FIG. 7B
USER DECIDES WHAT IS IN FOCUS MAN AND TREE IN FOCUS, MOUNTAINS NOT

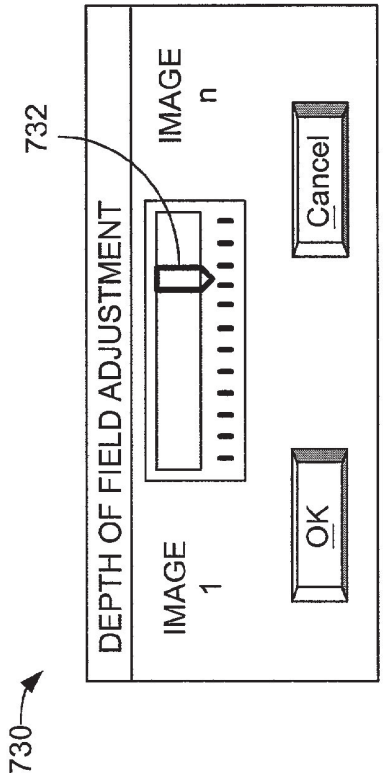

FIG. 7C
USER DECIDES DEPTH OF FIELD

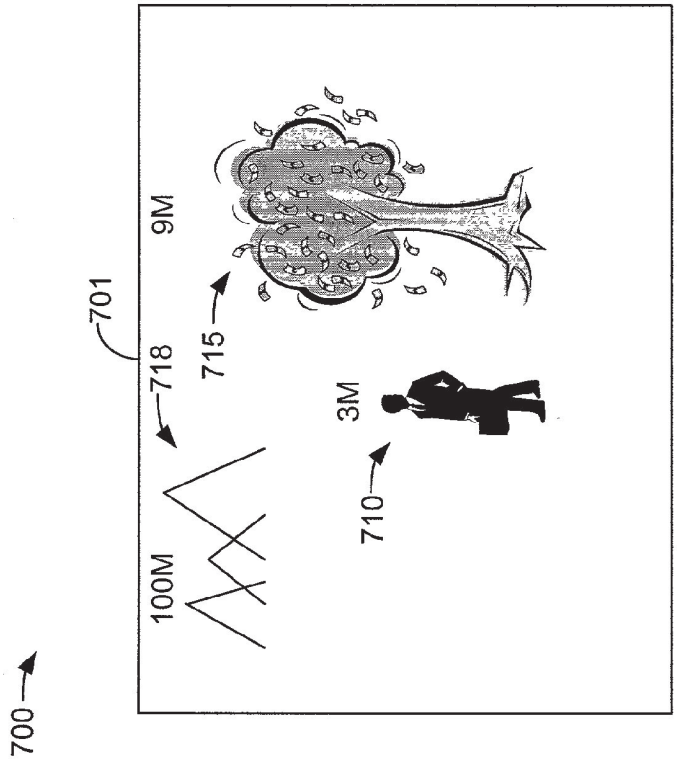

FIG. 7A
USER CHOOSES THE DEPTH OF FIELD AND THE FOCUS

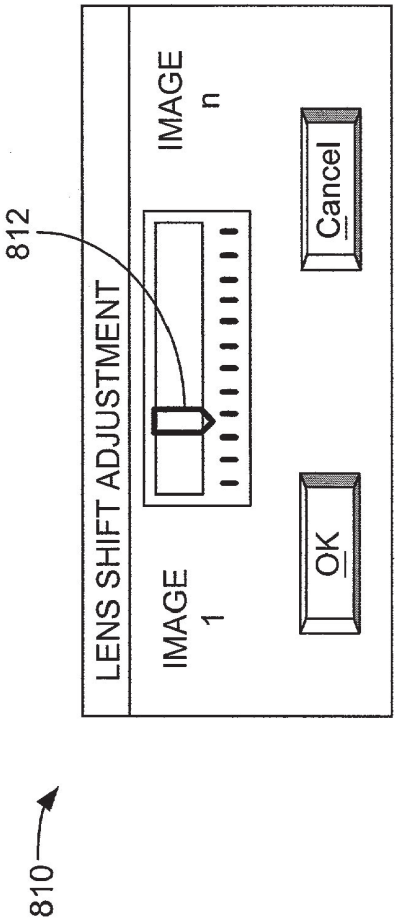
810
LENS SHIFT ADJUSTMENT
812
IMAGE 1
IMAGE n
OK
Cancel

FIG. 8A

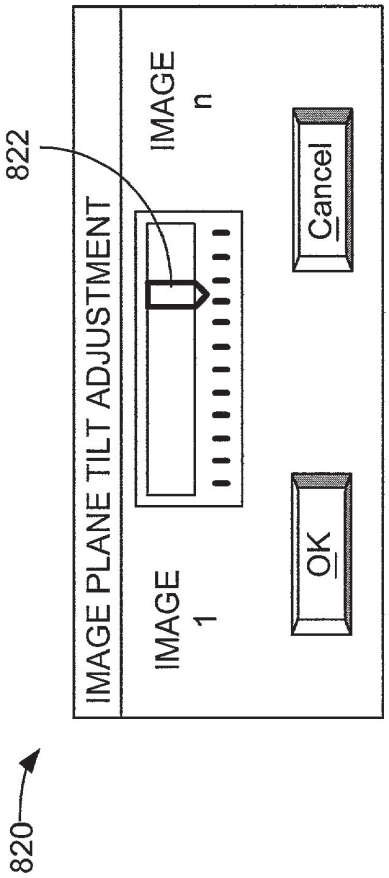
820
IMAGE PLANE TILT ADJUSTMENT
822
IMAGE 1
IMAGE n
OK
Cancel

FIG. 8B

SYSTEM AND METHOD FOR USING MULTIPLE IMAGES IN A DIGITAL IMAGE CAPTURE DEVICE

TECHNICAL FIELD

[0001] The present invention relates generally to digital photography, and, more particularly, to a digital image capture and processing system and method for using multiple images to improve a final image in a digital image capture device.

BACKGROUND OF THE INVENTION

[0002] With the proliferation of low cost microprocessors, memory and image capture electronics, digital cameras and digital video cameras are gaining in popularity and are becoming more and more widely available to a larger number of consumers. One of the advantages that a digital camera enjoys over a conventional film camera is that when a digital camera captures an image, the image is stored electronically in a memory element associated with the camera and available for further electronic manipulation. Conversely, when a conventional still camera captures an image, the image is permanently exposed on a physical film, and therefore, not available for further manipulation.

[0003] Another advantage that a digital camera enjoys over a conventional film camera is the ability to rapidly capture multiple images of the "same" photograph. These multiple images can be captured at a rate approaching many tens or hundreds of images per second. Having the ability to capture many images for each photograph raises the possibility of using the multiple images to produce a final photograph (or picture) that has a quality significantly more desirable than that available using a convention camera that can only capture one image per photograph. Some conventional video cameras use multiple exposures to develop a single image having enhanced resolution by combining information from a series of de-interlaced video frames. Unfortunately, these video cameras are limited to resolution enhancement and require complex and sophisticated external processing devices.

[0004] Therefore, there is a need in the industry for a way to exploit the ability of a digital camera to capture multiple images to provide a high quality photograph.

SUMMARY OF THE INVENTION

[0005] Embodiments of the invention include a system and method for using the multiple images available from a digital camera to produce a new image in which features and aspects of the multiple images are combined to produce a new image having at least one characteristic different from corresponding characteristics of the at least two images. For example, if each of the at least two images is each captured at a different focus distance, the new image may have an apparent focus distance between the focus distance of each of the at least two images.

[0006] In one embodiment, the invention is a digital image capture and processing device, comprising a lens coupled to a lens control element, an image sensor configured to capture images from the lens, and a memory element and a processor coupled to the lens control element. The memory element includes image capture software, where the image capture software cause the lens and the image sensor to capture at least two images, each of the at least two images captured using a varying parameter and stored as a single file where the at least two images are combined to form a new image having at least one characteristic different from corresponding characteristics of the at least two images.

[0007] Related methods of operation and computer readable media are also provided. Other systems, methods, features, and advantages of the invention will be or become apparent to one with skill in the art upon examination of the following figures and detailed description. It is intended that all such additional systems, methods, features, and advantages be included within this description, be within the scope of the invention, and be protected by the accompanying claims.

BRIEF DESCRIPTION OF THE DRAWINGS

[0008] Embodiments of the present invention, as defined in the claims, can be better understood with reference to the following drawings. The components within the drawings are not necessarily to scale relative to each other, emphasis instead being placed upon clearly illustrating the principles of the present invention.

[0009] **FIG. 1** is a schematic view illustrating a digital camera constructed in accordance with an embodiment of the invention.

[0010] **FIG. 2** is a schematic view illustrating an alternative embodiment of the environment in which an embodiment of the invention may be implemented.

[0011] **FIG. 3** is a block diagram illustrating an exemplar graphical user interface (GUI) presented to a user of the computer by the user interface software of **FIG. 2** or the user interface of **FIG. 1**.

[0012] **FIG. 4** is a graphical illustrating showing exemplar multiple images captured using the digital camera.

[0013] **FIG. 5** is a graphical illustration of multiple images captured using the digital camera of **FIG. 1**.

[0014] **FIG. 6** is a graphical illustration of a single photograph formed from the multiple images of **FIG. 5**.

[0015] **FIGS. 7A through 7C** collectively illustrate an alternative embodiment of the invention in which the multiple exposures can be combined into a single image in which both the focal length of each image and the depth of field of each image can be selected by the user.

[0016] **FIGS. 8A and 8B** collectively illustrate another alternative embodiment of the invention.

DETAILED DESCRIPTION OF THE PREFERRED EMBODIMENT

[0017] The invention described hereafter is applicable to any digital camera that can capture multiple images. Furthermore, while described below in the context of a user configurable system, the system for combining multiple images in a digital camera is equally applicable to an automatic system for combining multiple images.

[0018] The system and method for combining multiple images in a digital camera can be implemented in hardware, software, firmware, or a combination thereof In the preferred

embodiment(s), the invention is implemented using a combination of hardware and software or firmware that is stored in a memory and that is executed by a suitable instruction execution system. The hardware portion of the invention can be implemented with any or a combination of the following technologies, which are all well known in the art: a discrete logic circuit(s) having logic gates for implementing logic functions upon data signals, an application specific integrated circuit (ASIC) having appropriate combinational logic gates, a programmable gate array(s) (PGA), a field programmable gate array (FPGA), etc. Software or firmware could be implemented in a microprocessor, digital signal processor (DSP), reduced instruction set computer (RISC), or special purpose programmable processor.

[**0019**] The program for combining multiple images in a digital camera, which comprises an ordered listing of executable instructions for implementing logical functions, can be embodied in any computer-readable medium for use by or in connection with an instruction execution system, apparatus, or device, such as a computer-based system, processor-containing system, or other system that can fetch the instructions from the instruction execution system, apparatus, or device and execute the instructions. In the context of this document, a "computer-readable medium" can be any means that can contain, store, communicate, propagate, or transport the program for use by or in connection with the instruction execution system, apparatus, or device. The computer readable medium can be, for example but not limited to, an electronic, magnetic, optical, electromagnetic, infrared, or semiconductor system, apparatus, device, or propagation medium. More specific examples (a nonexhaustive list) of the computer-readable medium would include the following: an electrical connection (electronic) having one or more wires, a portable computer diskette (magnetic), a random access memory (RAM) (electronic), a read-only memory (ROM) (electronic), an erasable programmable read-only memory (EPROM or Flash memory) (electronic), an optical disk (optical), and a portable compact disc read-only memory (CDROM) (optical). Note that the computer-readable medium could even be paper or another suitable medium upon which the program is printed, as the program can be electronically captured, via for instance optical scanning of the paper or other medium, then compiled, interpreted or otherwise processed in a suitable manner if necessary, and then stored in a computer memory.

[**0020**] Turning now to the drawings, **FIG. 1** is a schematic view illustrating a digital camera **102** constructed in accordance with an embodiment of the invention. The digital camera **102** includes a processor **104**, memory **106**, image sensor **116**, lens controller **142**, user input element **118**, display **122**, and removable memory element **124** coupled together via logical bus **126**. The processor **104** can be a special purpose or general purpose processor, such as a microprocessor, that can execute the software stored in the memory **106**. The memory **106** includes a number of software elements and storage locations, and can include, for example but not limited to, both volatile and non-volatile memory. For example, the memory element **106** can be random access memory (RAM), read only memory (ROM), or flash memory. When the digital camera **102** captures images, the images are stored in the memory element **106** as an image file **108** (to be described in further detail below). The memory element **106** also includes multiple image capture software **150** and a user interface **160**.

[**0021**] While described herein as implemented using software that is stored in memory **106** and implemented in the processor **104**, the invention can also be implemented using an application specific integrated circuit (ASIC) **152** that includes image capture logic **154**. In such an embodiment, the functionality of the multiple image capture software **150** and the processor **104** to be described below can be included in the ASIC **152**.

[**0022**] The user input element **118** includes buttons and controls that allow a user to operate the digital camera **102**, and may also include, for example, a mouse, pointer, keypad, shutter release button, or any other user interface elements of the digital camera **102**. The display **122**, which can be, for example, a liquid crystal display (LCD), or any other type of display element, allows a user of the digital camera **102** to view captured images and other camera operating parameters. The removable memory element **124** can be, for example, a non-volatile memory such as a removable flash card.

[**0023**] The image sensor **116**, which can be, for example but not limited to, a charge coupled device (CCD), or complimentary metal oxide semiconductor (CMOS) sensor, receives input from the lens **128** via connection **132**. The lens **128** is directed toward a subject **158**. The lens **128** captures images of the subject **158** and transfers those images via connection **132** to the image sensor **116**. The image sensor **116** converts the image of the subject **158** into an electronic format that is stored in the memory **106**. In accordance with an embodiment of the invention, the image sensor **116** captures multiple images of the subject **158** and stores the multiple images in the memory **106** as image file **108**.

[**0024**] The lens controller **142** communicates with the lens motor **136** via connection **138**. The lens motor communicates with the lens **128** via connection **134**. The focus determination element **146** communicates with the lens controller **142** via connection **144** and with the lens motor **136** via connection **162**. The lens controller **142**, focus determination element **146** and the lens motor **136** operate in unison to focus the lens **128** on the subject **158** and determine whether the lens is properly focused. The lens controller also includes a lens position indicator **148** to communicate the position of the lens **128** to the processor **104**.

[**0025**] In accordance with an embodiment of the invention, the lens **128** and the image sensor **116** capture multiple images of the subject **158**. These multiple images **115** are stored in the memory element **106** as a single image file **108**. The multiple images **115** are taken in succession and with one or more varying parameters so that each of the multiple images will provide an image of the subject **158** with some slight difference between them.

[**0026**] For example, in one embodiment of the invention, each of the images **115** is taken at a different focus distance. The multiple images may be similar. Images are similar when they have sufficient elements in common that allows them to be matched to one another to allow processing as described herein. Images of the same scene displaced in time or space are considered similar. Further, the similar images may differ primarily in color where the color difference may be from a different color light or light having a different color temperature from that of the original exposure. The two images may also differ in exposure, illumination, and

depth of field. Further, one of the two similar images may be captured using a first photography mode, such as conventional photography using visible light, and the second of the similar images is captured using a second photography mode, such as infrared exposure. Further still, one of the multiple images may be stored in the image sensor **116** if the image sensor **116** is implemented as a CMOS sensor.

[**0027**] Alternatively, a stereo-like camera could also capture multiple images displaced in space. Further, an image could be split (e.g. using a prism) within the camera so that a single image is captured using two or more different conditions, possibly focus for example. However, such alternative implementations may require multiple image sensors.

[**0028**] Furthermore, multiple images may be captured where the variance between the multiple images is sufficiently small that the difference can be neglected when compositing the multiple images into a single, improved image. The two images could be a fraction of a second apart or a year apart in time, for example, provided that the difference in time does not overwhelm the effect intended to be created by combining the two images.

[**0029**] Although only three images **115** are shown in the image file **108**, any number of images **115** can be captured by the image sensor **116** and stored in the memory **106**. In accordance with an embodiment of the invention, a user is presented with a user interface **160** (via the multiple image capture software **150**) through the display **122** and the user input element **118** so that a user may scroll through the multiple images **115** and combine aspects of the multiple images to develop a new image **120**. The new image **120** may have different characteristics than any of the three images **115** and can also be stored in image file **108**. (This embodiment will be described in further detail below with respect to **FIGS. 3 and 4**).

[**0030**] The lens controller **142** communicates with the processor **104** and with the lens motor **136** to position the lens **128** at different focus distances for each of the multiple images **115**. The focus determination element **146** cooperates with the lens motor **136** and the lens **128** to determine whether an image is in focus. This focus information is supplied to the lens controller **142** via connection **144**.

[**0031**] **FIG. 2** is a schematic view illustrating an alternative embodiment **200** of the environment in which the invention may be implemented. As mentioned above, in one embodiment, the system and method for combining multiple images in a digital camera is implemented primarily in software in a general purpose personal computer, such as the computer **202** shown in **FIG. 2**.

[**0032**] The computer **202** includes a memory **206**, which includes software in the form of multiple image capture software **250**. The multiple image capture software **250** includes a user interface **260**, and is similar to the multiple image capture software **150** and user interface **160** described above in **FIG. 1**. The computer **202** also includes other software and hardware elements (to be discussed below) that work in unison to implement the functionality of this embodiment of the invention.

[**0033**] Generally, in terms of hardware architecture, as shown in **FIG. 2**, the computer **202** includes a processor **204**, a memory **206**, a disk drive **212**, a video interface **242** and an input/output element **238** that are connected together and can communicate with each other via a local interface **224**. The local interface **224** can be, for example but not limited to, one or more buses or other wired or wireless connections, as is known to those having ordinary skill in the art. The local interface **224** may have additional elements, which are omitted for simplicity, such as buffers (caches), drivers, and controllers, to enable communications. Further, the local interface **224** includes address, control, and data connections to enable appropriate communications among the aforementioned components. The input/output element **238** includes a data capture element **226**, an input interface **228**, an output interface **232** and a network interface **236** each in communication with the local interface **224**. The disk drive **212** can be any storage element or memory device, and as used herein, refers to a computer hard disk drive.

[**0034**] The processor **204** is a hardware device for executing software that can be stored in memory **206**. The processor **204** can be any custom made or commercially available processor, a central processing unit (CPU) or an auxiliary processor among several processors associated with the computer **202**, and a microchip-based microprocessor or a macroprocessor. Examples of suitable commercially available microprocessors are as follows: a PA-RISC series microprocessor from Hewlett-Packard Company, an 80×86 or Pentium series microprocessor from Intel Corporation, a PowerPC microprocessor from IBM Corporation, a Sparc microprocessor from Sun Microsystems, Inc., or a 68xxx series microprocessor from Motorola Corporation.

[**0035**] The memory **206** can include any one or a combination of volatile memory elements (e.g., random access memory (RAM, such as DRAM, SRAM, etc.)) and nonvolatile memory elements (e.g., RAM, ROM, hard drive, tape, CDROM, etc.). Moreover, the memory **206** may incorporate electronic, magnetic, optical, and/or other types of storage media. Note that the memory **206** can have a distributed architecture, where various components are situated remote from one another, but can be accessed by the processor **204**.

[**0036**] The input interface **128** can receive commands from, for example, keyboard **256** via connection **258** and from mouse **264** via connection **262** and transfer those commands over the local interface **224** to the processor **204** and the memory **206**.

[**0037**] In accordance with an embodiment of the invention, a digital camera **102** is coupled to the computer **202** via connection **254** and via the data capture element **226**. The data capture element **226** is component of the input/output element **238** and receives inputs from the digital camera **102**. As described above, the digital camera **102** includes a memory **106**. The memory **106** can be any type of memory employed in digital cameras, and can be, for example, but not limited to, a fixed or removable memory media. The digital camera **102** stores multiple images in the form of a single image file **108**. The image file **108** includes at least two images **115**.

[**0038**] When digital images **115** are captured and stored as image file **108** in a digital camera **102**, it is often desirable to transfer the image file **108** from the memory **106** to, for example, a computer **202**. When the image file **108** is transferred to the computer **202**, the image file **108** can be stored in the disk drive **212** as a stored image file **214**.

[0039] Alternatively, the image file **108** can be stored in any storage device, for example but not limited to, a memory, a disk, or any other storage element. The stored image file **214** includes the plurality of images **115** that comprise the image file **108** and includes the new image **120**. The stored image file **214**, and more particularly, each of the images **115**, can be further manipulated, as will be described below.

[0040] The video interface **242** supplies a video output signal via connection **276** to the display **278**. The display **278** can be a conventional CRT based display device, or can be any other display device, such as a liquid crystal display (LCD) or other type of display on which a user of the computer **202** is presented with a user interface to view and manipulate the images **115** in the stored image file **214**.

[0041] The output interface **232** sends printer commands via connection **266** to the printer **268** so that desired images can be printed. The network interface **236**, can be, for example, a network interface card located in the computer **202**, a dial-up modulator/demodulator (modem), a digital subscriber line (DSL) transceiver or cable modem, or any other communication device capable of connecting the computer **202** to an external network **274**. For example, in an alternative implementation, the camera **102** may couple to the computer **202** via a network **274**. The network **274** may be, for example, a local area network (LAN) or a wide area network (WAN).

[0042] The software in memory **206** may include one or more separate programs, each of which comprise one or more code segments, which are an ordered listing of executable instructions for implementing logical functions. In the example of **FIG. 2**, the software in the memory **206** includes the multiple image capture software **250**, which includes a user interface **260**. The memory **206** also includes camera software **222**, which allows a user of the computer **202** to, for example, upload, print, manipulate, and view the images **115** in the stored image file **214**, and a suitable operating system (O/S) **220**. While described above as storing the image file **108** in the disk drive **212**, the invention is also applicable if the image file **214** remains on the digital camera **102**.

[0043] The multiple image capture software **250**, as described above, allows a user of the computer **202** and the digital camera **102** to manipulate multiple captured images so that a single image **120** that exhibits desired features from one or more of the multiple images **115** can be composed.

[0044] With respect to the operating system **220**, a non-exhaustive list of examples of suitable commercially available operating systems **220** is as follows: a Windows operating system from Microsoft Corporation, MacOS operating system from Apple Computer, a Netware operating system available from Novell, Inc., or a UNIX operating system, which is available for purchase from many vendors, such as Hewlett-Packard Company and Sun Microsystems, Inc. The operating system **220** essentially controls the execution of other computer programs, such as the multiple image capture software **250**, and provides scheduling, input-output control, file and data management, memory management, and communication control and related services. The processor **204** and operating system **220** define a computer platform, for which application programs, such as the multiple image capture software **250** and the camera software **222**, in higher level programming languages are written.

[0045] If the computer **202** is a PC, the software in the memory **206** further includes a basic input output system (BIOS) (omitted for simplicity). The BIOS is a set of essential software routines that test hardware at startup, start the O/S **220**, and support the transfer of data among the hardware devices. The BIOS is stored in ROM so that it can be executed when the computer **102** is activated.

[0046] When the computer **202** is in operation, the processor **204** is configured to execute software stored within the memory **206**, to communicate data to and from the memory **206** and to generally control operations of the computer **202** pursuant to the software. The multiple image capture software **250**, camera software **222** and the O/S **220**, in whole or in part, but typically the latter, are read by the processor **204**, perhaps buffered within the processor **204**, and then executed.

[0047] When the system and method for using multiple images is implemented primarily in software, as is shown in **FIGS. 1 and 2**, it should be noted that the multiple image capture software **250** and the camera software **222** can be stored on any computer readable medium for use by or in connection with any computer related system or method. In the context of this document, a computer readable medium is an electronic, magnetic, optical, or other physical device or means that can contain or store a computer program for use by or in connection with a computer related system or method. The multiple image capture software **250** and the camera software **222** can be embodied in any computer-readable medium for use by or in connection with an instruction execution system, apparatus, or device, such as a computer-based system, processor-containing system, or other system that can fetch the instructions from the instruction execution system, apparatus, or device and execute the instructions. In the context of this document, a "computer-readable medium" can be any means that can contain, store, communicate, propagate, or transport the program for use by or in connection with the instruction execution system, apparatus, or device.

[0048] The computer readable medium can be, for example but not limited to, an electronic, magnetic, optical, electromagnetic, infrared, or semiconductor system, apparatus, device, or propagation medium. More specific examples (a non-exhaustive list) of the computer-readable medium include the following: an electrical connection (electronic) having one or more wires, a portable computer diskette (magnetic), a random access memory (RAM) (electronic), a read-only memory (ROM) (electronic), an erasable programmable read-only memory (EPROM or Flash memory) (electronic), an optical fiber (optical), and a portable compact disc read-only memory (CDROM) (optical). Note that the computer-readable medium could even be paper or another suitable medium upon which the program is printed, as the program can be electronically captured, via for instance optical scanning of the paper or other medium, then compiled, interpreted or otherwise processed in a suitable manner if necessary, and then stored in a computer memory.

[0049] The hardware components of the system and method for using multiple images can be implemented with any or a combination of the following technologies, which are each well known in the art: a discrete logic circuit(s) having logic gates for implementing logic functions upon

data signals, an application specific integrated circuit (ASIC) having appropriate combinational logic gates, a programmable gate array(s) (PGA), a field programmable gate array (FPGA), etc.

[0050] **FIG. 3** is a block diagram illustrating an exemplar graphical user interface (GUI) **300** presented to a user of the computer **202** by the user interface software **260** of **FIG. 2** or the user interface **160** of **FIG. 1**. While the GUI **300** can be presented to a user via the camera display **122** or the display **278** associated with the computer **202**, the GUI **300** will be described with reference to the computer **202**. The GUI **300** is presented to a user of the computer **202** when the user wishes to view the multiple captured images to compose a single photograph. It should be mentioned that the GUI **300** presented to the user is merely one possible non-limiting example of a possible user interface. Many alternative implementations may be possible.

[0051] When the user interface software **260** in the multiple image capture software **250** is activated, the GUI **300** presents the user of the computer **202** with a series of choices. For example, the GUI **300** may present the user with a dialog box **310** that allows the user to select one of the plurality of images **115** that has the focus desired by the user. The dialog box **310** includes, for example, a slider **312** that the user manipulates using the mouse **264** (**FIG. 2**) to scroll through the multiple images **115** (denoted in **FIG. 3** as images **1** through n) and select the one image that the user desires to use as the photograph. This allows a user to "select focus" after two or more images are captured.

[0052] **FIG. 4** is a graphical illustration **400** showing exemplar multiple images captured using the digital camera **102**. **FIG. 4** includes four (4) exemplar images **115***a*, **115***b*, **115***c* and **115***d*, each captured by the digital camera **102** at a different focus distance. For example, the image **115***a* is captured at a focus distance of 1 meter (m), the image **115***b* is captured at a focus distance of 3 m, the image **115***c* is captured at a focus distance of 10 m and the image **115***d* is captured at a focus distance of infinity.

[0053] Although difficult to discern from the drawing, each of the images in **FIG. 4** will appear slightly different because each was captured at a different focus distances. In such a case, the user manipulates the slider **312** (**FIG. 3**) to scroll though the four images **115***a* through **115***d* to select the one that exhibits the focus that the user desires. In an alternative embodiment, the user may manipulate the slider **312** to continuously scroll through the images **115** and blend the images into a single photograph, or new image **120**, thus incorporating features of two or more images into the single photograph.

[0054] Referring again to **FIG. 3**, after the user selects the desired image or blends aspects of the plurality of images into a new image **120**, the user may press the OK button **314** to advise the multiple image capture software **250** that the user has composed a photograph. At this point, further manipulation may be performed. For example, by pressing button **302** a selected image can be printed. Similarly, by pressing button **304**, a selected image can be viewed, by pressing button **306** a selected image can be uploaded, and by pressing button **308** a selected image can be emailed.

[0055] **FIGS. 5 and 6** will be collectively referred to below to describe an alternative embodiment of the invention. **FIG. 5** is a graphical illustration of multiple images **115***a*, **115***b* and **115***c* captured using the digital camera **102** of **FIG. 1**. Although mentioned above as preferably capturing ten images, for simplicity, the following description will refer to two captured images. Image **115***a* taken at a 9 m focus distance depicts a tree **510** that is in focus at the 9 m focus distance. Image **115***b* taken at a 3 m focus distance depicts a man **515** that is in focus at the 3 m focus distance.

[0056] **FIG. 6** is a graphical illustration of a single photograph formed from the multiple images of **FIG. 5**. In **FIG. 6, a** single image **601** is composed by the user of the computer **202** using the user interface **260**, whereby the single image includes both the in-focus subject **510** of image **115***a* of **FIG. 5** and the in-focus subject **515** of image of **115***b* of **FIG. 5**. For example, the multiple image capture software **250** captures the multiple images shown in **FIG. 5** with a lens setting that will produce different depths of field. Then, the multiple image capture software **250** combines the multiple images at the multiple depths of field into a single image **601** that includes both the in-focus subjects of images **115***a* and **115***a*. In this manner, the image **601** of **FIG. 6** illustrates the ability of the multiple image capture software **250** to merge multiple images into one image having an infinite depth of field. In an alternative implementation, this mode of operation may be selected by a user through the use of a button on the user input element **118** of **FIG. 1**.

[0057] Referring back to **FIG. 5**, in another aspect of the invention, each of the images **115***a*, **115***b* and **115***c* are divided into a number of regions, an exemplar of one which is illustrating using reference number **502**. Each of the regions can be, for example, a 16×16 group of pixels **504**, an exemplar pixel being illustrating using reference number **506**. The multiple image capture software **150** and the focus determination element **146** cooperate to determine whether each pixel **506** (and hence, each region **502**) is in focus.

[0058] In this embodiment of the invention, by having information relating to which of the regions **502** are in focus, the image capture software **150** (**FIG. 1**) can use an alpha channel, known to those having ordinary skill in the art, to assign distance information to each of the pixels **506** within each region of **502**. In this manner, the distance between the subject **158** and the digital camera **102** (**FIG. 1**) for each pixel **506** (and each region **502**) can be assigned.

[0059] Varying the number of bits used by each pixel in the image sensor can improve the overall quality of an image. In another embodiment of the invention, the quality of an image can be improved by increasing the number of effective bits at pixel locations in an image where movement between multiple images has not occurred. When capturing multiple images, each of the captured images (i.e., **115***a*, **115***b* and **115***c*) is displaced from the previous image by a small amount of time. This time can vary from a minimum time allowed by the characteristics of the image sensor **116** to longer periods of time determined by the movement of the captured objects. The image capture software **150** can vary the number of effective bits that each pixel **506** uses to capture each image **115***a*, **115***b* and **115***c*. Varying the number of effective bits used by each pixel **506**, varies the effective bit depth available from pixel to pixel and the signal-to-noise ratio of each pixel.

[0060] For example, areas of the image, such as shadows where less light is available can have greater effective bit

depth than the rest of the image by using this technique. The signal-to-noise ratio of each pixel (e.g., pixel **506**) determines the number of effective bits that will be used by that pixel **506** to display the data. For example, assume that each pixel has 16 bits assigned—that is, the file format of the file allocates 16 bits of memory for each pixel location. Depending on the signal-to-noise ratio of the data corresponding to that pixel, all 16 bits may not be used to characterize the data for the pixel. In normal camera operation, a fixed number of bits (typically 10-12 bits) are used across the image. In the case of an image including a significant portion of shadow, only 8 bits of data may be meaningful for that pixel under normal operation. Averaging multiple samples of the same (or nearly the same) pixels from a range of exposures can reduce the noise for that pixel, and provide an increase in the number of effective bits used by that pixel. This can improve the signal-to-noise ratio of that pixel and improves the accuracy of that pixel.

[**0061**] An extension to the concept of varying the number of bits used by each pixel, is to use a motion estimation algorithm to predict the motion of objects that are moving from image to image, thereby allowing greater accuracy for the pixels associated with these moving objects. If the digital camera **102** is also moving, successive images may partially overlap. Matching the overlapped areas allows a composite image to be created that is larger than the image size of each captured image **115**. Due to the motion, an exact overlap may not be obtained. Removing the areas of motion allows the remainder of the images to be automatically combined. The area of overlap between the images benefits from the accuracy enhancement described above.

[**0062**] **FIGS. 7A through 7C** collectively illustrate an alternative embodiment of the invention in which the multiple exposures **115** can be combined into a single image in which both the focus distance of each image and the depth of field of each image can be selected by the user. For example, the image **701** includes a subject **710** taken at 3M, a subject **715** taken at 9M, and a subject **718** taken at 100M. By using the focus adjustment user interface provided in dialog box **720** and the depth of field adjustment user interface provided by dialog box **730**, a user can manipulate the respective sliders **722** and **732** so that the user can change the focus point using the slider **722** and can choose the depth of field using the slider **732**. In this manner, the user of the computer **202** can decide which of the multiple images **115** to combine to compose the final image.

[**0063**] **FIGS. 8A and 8B** collectively illustrate another alternative embodiment of the invention. **FIG. 8A** illustrates a user interface provided by dialog box **810** that includes a lens shift adjustment feature. **FIG. 8B** illustrates a user interface provided by dialog box **820** that includes an image plane tilt adjustment feature. The terms "tilt" and "shift" refer to movement of the lens of a conventional camera with respect to the image plane. For example, the term "tilt" refers to physically tilting the lens with respect to the image plane, while the term "shift" refers to the axial movement of the lens with respect to the image plane.

[**0064**] In conventional photography, lens tilt and shift compensate for a phenomenon known as keystone distortion. Keystone distortion refers to distortion in which an object located closer to the lens appears wider than an object located further away from the lens. This embodiment of the invention allows the multiple exposures **115** to be taken as the lens **128** is moved through various focal lengths. After the multiple images are captured, the image capture software **150 (FIG. 1) (250FIG. 2)** and the user interface **160 (FIG. 1) (260FIG. 2)** can be used to simulate lens tilt and shift after the image is captured. The user interface dialog boxes **810** and **820** of **FIGS. 8A and 8B**, respectively, allow a user of the computer to use the slider **812** to adjust the lens shift and then slider **822** to adjust the image plane tilt with respect to all of the images **115**. In this manner, the user can control and select the lens shift and the image plane tilt that best suits their needs for the final image.

[**0065**] While various embodiments of the invention have been described, it will be apparent to those of ordinary skill in the art that many more embodiments and implementations are possible that are within the scope of this invention. For example, while illustrated as capturing multiple images while adjusting the focus distance, other parameters can be varied between the multiple images. For example, the photographic techniques used between multiple images can also be varied. All such modifications and variations are intended to be included herein within the scope of this disclosure and the present invention and protected by the following claims.

What is claimed is:

1. A digital image capture and processing system, comprising:

a lens coupled to a lens control element;

an image sensor configured to capture images from the lens; and

a memory element and a processor coupled to the lens control element, the memory element including image capture software, where the image capture software cause the lens and the image sensor to capture at least two images, each of the at least two images captured using a varying parameter and stored as a single file, where the at least two images are combined to form a new image having at least one characteristic different from corresponding characteristics of the at least two images.

2. The system of claim 1, wherein the varying parameter is focus distance.

3. The system of claim 2, further comprising a user interface associated with the image capture software, where the user interface allows the user of the device to scroll through the at least two images and select one of the images as the new image.

4. The system of claim 2, further comprising a user interface associated with the image capture software, where the user interface allows the user to combine attributes of the at least two images to form the new image.

5. The system of claim 4, wherein the user interface allows the different focus of each of the at least two images to be blended into the new image that includes an apparent focus between the two focus distances.

6. The system of claim 5, further comprising:

a lens position indicator configured to indicate the position of the lens for each of the at least two images;

a focus determination element configured to analyze each of a plurality of regions associated with each of the at

least two images, the focus determination element also configured to determine whether each of the plurality of regions are in focus; and

where the image capture software assembles each of the in-focus regions into the new image.

7. The system of claim 6, further comprising:

a depth of field indicator assigned to each of the at least two images, where the depth of field indicator allows a user to determine a depth of field for each of the at least two images.

8. The system of claim 7, wherein the user interface includes a depth of field adjustment that allows a user to select the depth of field of the new image from the depth of field of each of the at least two images.

9. The system of claim 6, further comprising a distance indicator assigned to each of the regions, the distance indicator configured to assign a distance measurement to an alpha channel for each region.

10. The system of claim 9, wherein the user interface further comprises a lens shift and an image plane tilt adjustment.

11. The system of claim 1, wherein a first of the at least two images is captured using conventional photography and a second of the at least two images is captured using infrared photography.

12. The system of claim 1, wherein the varying parameter is the number of bits used by each pixel in the image sensor.

13. A method for operating a digital image capture and processing device, the method comprising the steps of:

coupling a lens to a lens control element;

coupling an image sensor to the lens;

capturing at least two images, each of the at least two images captured using a varying parameter, where the at least two images are combined to form a new image having at least one characteristic different from corresponding characteristics of the at least two images; and

storing the at least two images as a single file.

14. The method of claim 13, wherein the varying parameter is focus distance.

15. The method of claim 14, further comprising the steps of:

scrolling through the at least two images; and

selecting one of the images as the new image.

16. The method of claim 14, further comprising the step of combining attributes of the at least two images to form the new image.

17. The method of claim 16, further comprising the step of blending each of the at least two images into the new image that includes an apparent focus between the focus distance of each of the at least two images.

18. The method of claim 17, further comprising the steps of:

indicating the position of the lens for each of the at least two images;

dividing each of the at least two images into a plurality of regions;

analyzing each of the regions to determine whether each of the plurality of regions are in focus; and

assembling each of the in-focus regions into the new image.

19. The method of claim 18, further comprising the steps of:

assigning a depth of field indicator to each of the at least two images; and

determining a depth of field for each of the at least two images.

20. The method of claim 19, further comprising the step of using a depth of field adjustment to select the depth of field of the new image from the depth of field of each of the at least two images.

21. The method of claim 18, further comprising the step of assigning a distance indicator to each of the regions, the distance indicator configured to assign a distance measurement to an alpha channel for each region.

22. The method of claim 21, further comprising the step of adjusting lens shift and image plane tilt.

23. The method of claim 13, further comprising the steps of:

capturing a first of the at least two images using conventional photography; and

capturing a second of the at least two images using infrared photography.

24. The method of claim 13, further comprising the step of varying the number of bits used by each pixel in the image sensor.

25. An image processing system, comprising:

an image storage device;

at least two similar images contained in the image storage device;

a processor coupled to the image storage device;

a code segment for processing the at least two similar images, where the at least two similar images are combined to form a new image having at least one characteristic different from corresponding characteristics of the at least two images; and

an output element for rendering the new image.

26. The system of claim 25, wherein the image processing system is contained within an image capture device such that the at least two similar images are captured by the image capture device and placed in the image storage device.

27. The system of claim 26, where the image processing system instructs the image capture device to vary at least one parameter of the image capture device so that the at least two similar images differ due to the variance of the at least one parameter.

28. The system of claim 26, wherein the image storage device for one of the at least two similar images is the image sensor of the image capture device.

29. The system of claim 25, wherein the at least one characteristic is different depth of field.

30. The system of claim 25, wherein the at least one characteristic is different exposure.

31. The system of claim 27, wherein the at least one parameter is image illumination.

32. The system of claim 25, wherein the at least two similar images differ primarily in focus.

33. The system of claim 25, where the at least two similar images differ primarily in color.

34. The system of claim 25, wherein a first of the at least two similar images is captured using visible light and the second of the at least two similar images is captured using infrared exposure.

* * * * *