US008874283B1

(12) **United States Patent**
Cavote

(10) **Patent No.: US 8,874,283 B1**
(45) **Date of Patent: Oct. 28, 2014**

(54) **DRONE FOR INSPECTION OF ENCLOSED SPACE AND METHOD THEREOF**

(71) Applicant: **United Dynamics Advanced Technologies Corporation**, Brooks, KY (US)

(72) Inventor: **John M. Cavote**, Brooks, KY (US)

(73) Assignee: **United Dynamics Advanced Technologies Corporation**, Brooks, KY (US)

(*) Notice: Subject to any disclaimer, the term of this patent is extended or adjusted under 35 U.S.C. 154(b) by 36 days.

(21) Appl. No.: **13/693,319**

(22) Filed: **Dec. 4, 2012**

(51) **Int. Cl.**

G05D 1/00	(2006.01)
B64C 19/00	(2006.01)
B64D 31/06	(2006.01)
B64D 47/08	(2006.01)

(52) **U.S. Cl.**
CPC ***B64D 47/08*** (2013.01); ***B64C 19/00*** (2013.01); ***B64D 31/06*** (2013.01); *Y10S 901/01* (2013.01)
USPC **701/2**; 701/36; 701/31.4; 701/11; 701/28; 901/1

(58) **Field of Classification Search**
CPC .. B64C 20/00; B64C 39/024; B64C 2201/00; B64C 2201/127; B64C 2201/066; G05D 1/0038; G06F 3/00
USPC 701/1, 2, 36, 31.4, 11, 13, 28, 117; 901/1
See application file for complete search history.

(56) **References Cited**

U.S. PATENT DOCUMENTS

2,101,399	A		12/1937	Larsen
3,013,747	A		12/1961	Grihangne et al.
3,811,320	A		5/1974	Cowell
4,029,164	A		6/1977	Urakami
4,121,865	A		10/1978	Littwin, Sr.
4,163,535	A		8/1979	Austin
4,174,081	A		11/1979	Sardanowsky
4,478,379	A		10/1984	Kerr
4,995,574	A		2/1991	Bernard et al.
5,015,187	A		5/1991	Lord
5,209,431	A		5/1993	Bernard et al.
5,240,207	A	*	8/1993	Eiband et al. 244/190
5,467,813	A		11/1995	Vermaat
5,497,960	A		3/1996	Previnaire
5,799,900	A	*	9/1998	McDonnell ..... 244/7 A
6,422,511	B1	*	7/2002	Kalisz ..... 244/114 R
6,450,445	B1		9/2002	Moller
6,634,593	B2		10/2003	Lepretre et al.
7,318,564	B1		1/2008	Marshall
7,398,946	B1		7/2008	Marshall
7,410,125	B2		8/2008	Steele
7,422,505	B2		9/2008	Van de Rostyne
7,425,167	B2		9/2008	Van de Rostyne

(Continued)

FOREIGN PATENT DOCUMENTS

JP	11079020	3/1999
WO	2009109711	9/2009

Primary Examiner — Gertrude Arthur Jeanglaude
(74) *Attorney, Agent, or Firm* — Middleton Reutlinger

(57) **ABSTRACT**

Embodiments of a drone for inspection and a method of use are depicted wherein the drone is utilized in an enclosed space and is capable of being controlled with or without line of sight to the aircraft. The drone may land on generally horizontal or vertical surfaces. A method of use is taught as well.

48 Claims, 12 Drawing Sheets

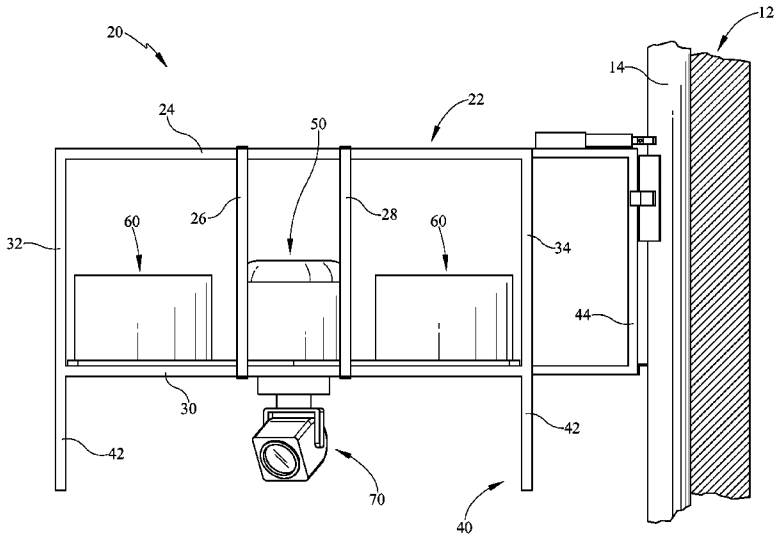

(56) **References Cited**

U.S. PATENT DOCUMENTS

7,425,168	B2	9/2008	Van de Rostyne
7,467,984	B2	12/2008	Van de Rostyne
7,494,397	B2	2/2009	Van de Rostyne
7,510,142	B2	3/2009	Johnson
7,543,780	B1	6/2009	Marshall et al.
7,662,013	B2	2/2010	Van de Rostyne et al.
7,815,482	B2	10/2010	Van De Rostyne
7,883,392	B2	2/2011	Van de Rostyne et al.
8,002,604	B2	8/2011	Van De Rostyne et al.
D648,808	S	11/2011	Seydoux et al.
D648,809	S	11/2011	Seydoux et al.
8,205,577	B2	6/2012	Sia et al.
8,210,126	B2	7/2012	Sia et al.
8,214,088	B2	7/2012	Lefebure
2007/0215750	A1	9/2007	Shantz et al.
2008/0220687	A1	9/2008	Taya
2009/0132100	A1	5/2009	Shibata
2010/0212983	A1	8/2010	Lama
2010/0227527	A1	9/2010	Smoot et al.
2011/0049290	A1	3/2011	Seydoux et al.
2011/0301784	A1 *	12/2011	Oakley et al. 701/2
2012/0255501	A1	10/2012	Sia et al.
2012/0273680	A1	11/2012	Furry

* cited by examiner

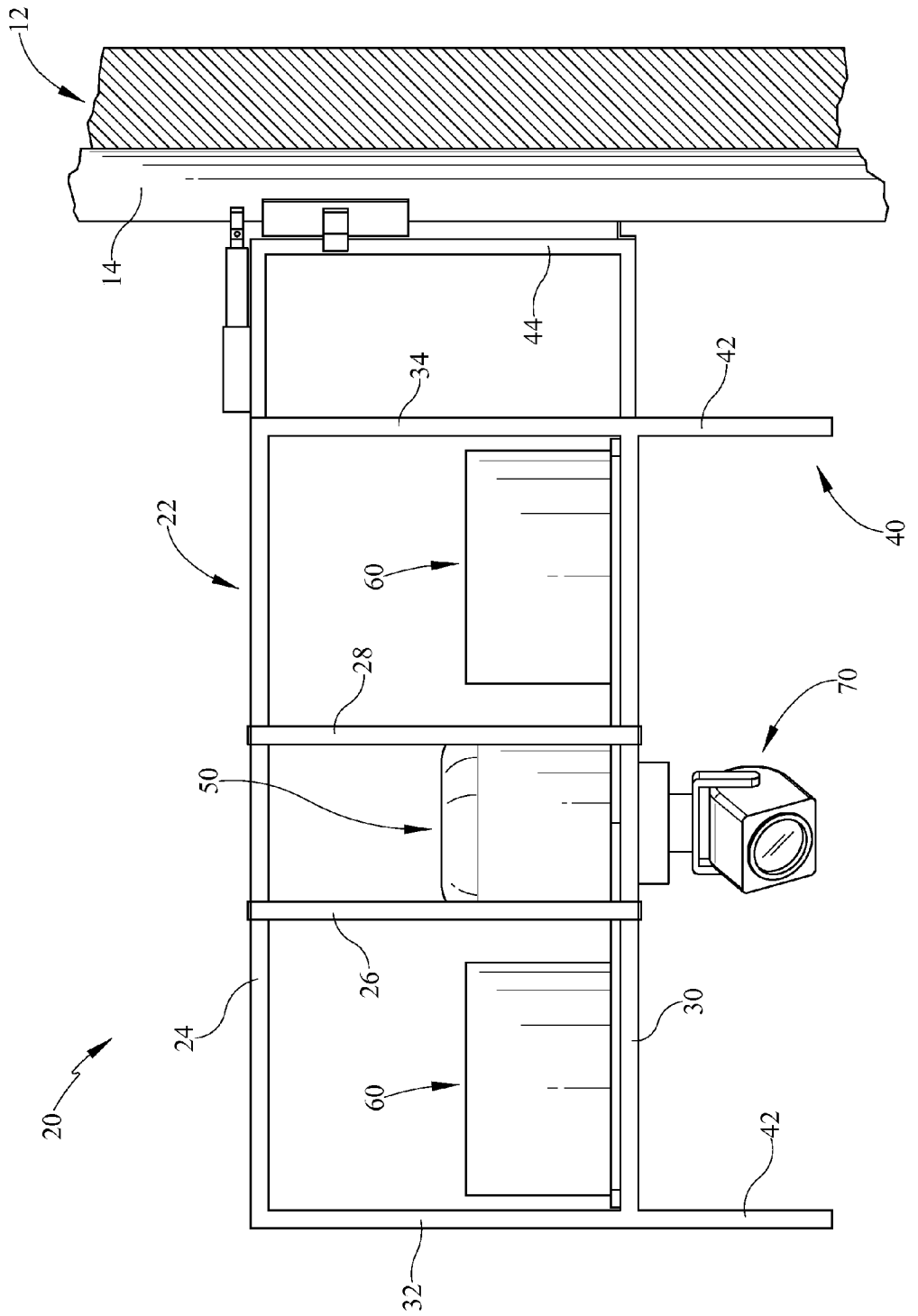

FIG. 1

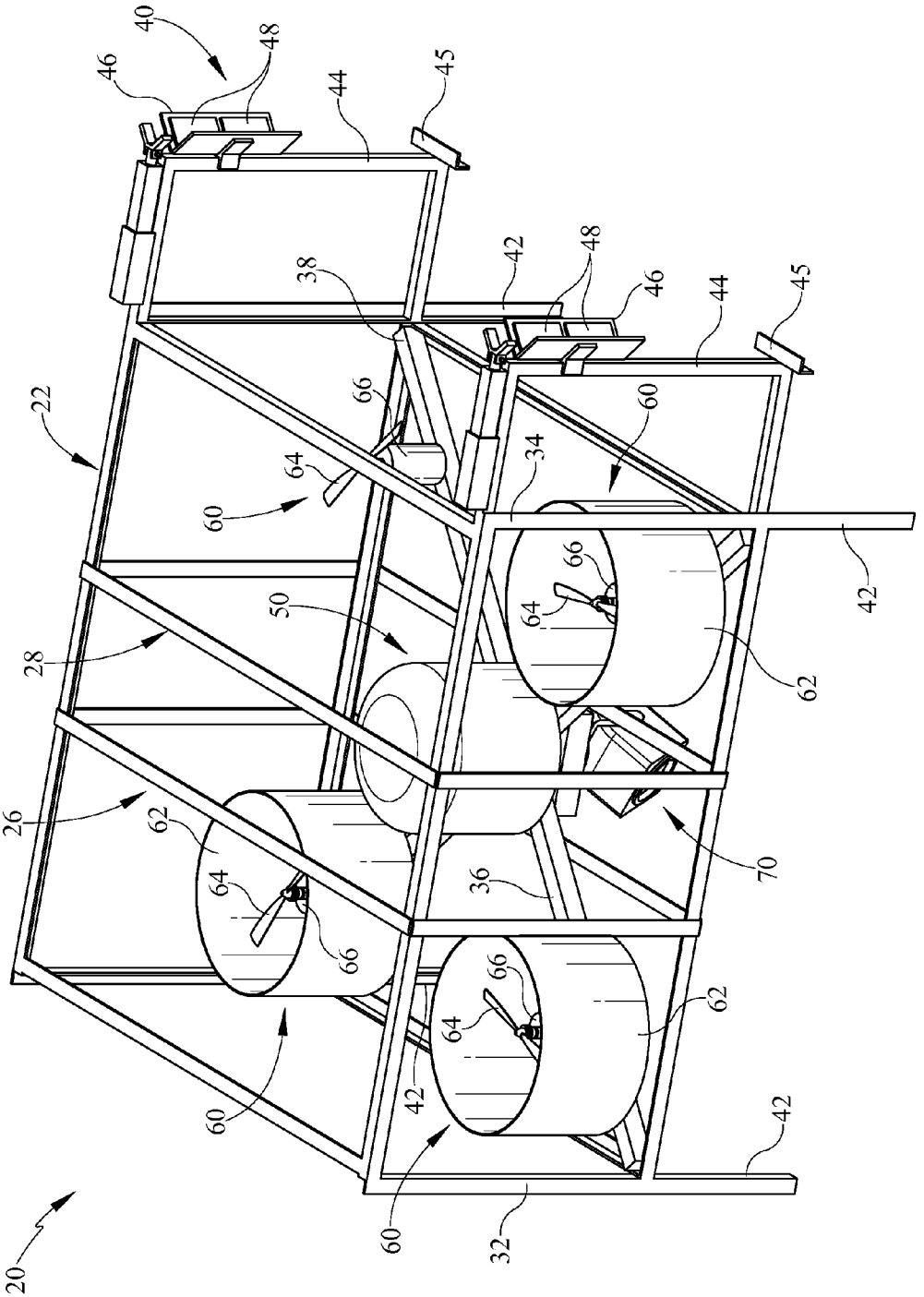

FIG. 2

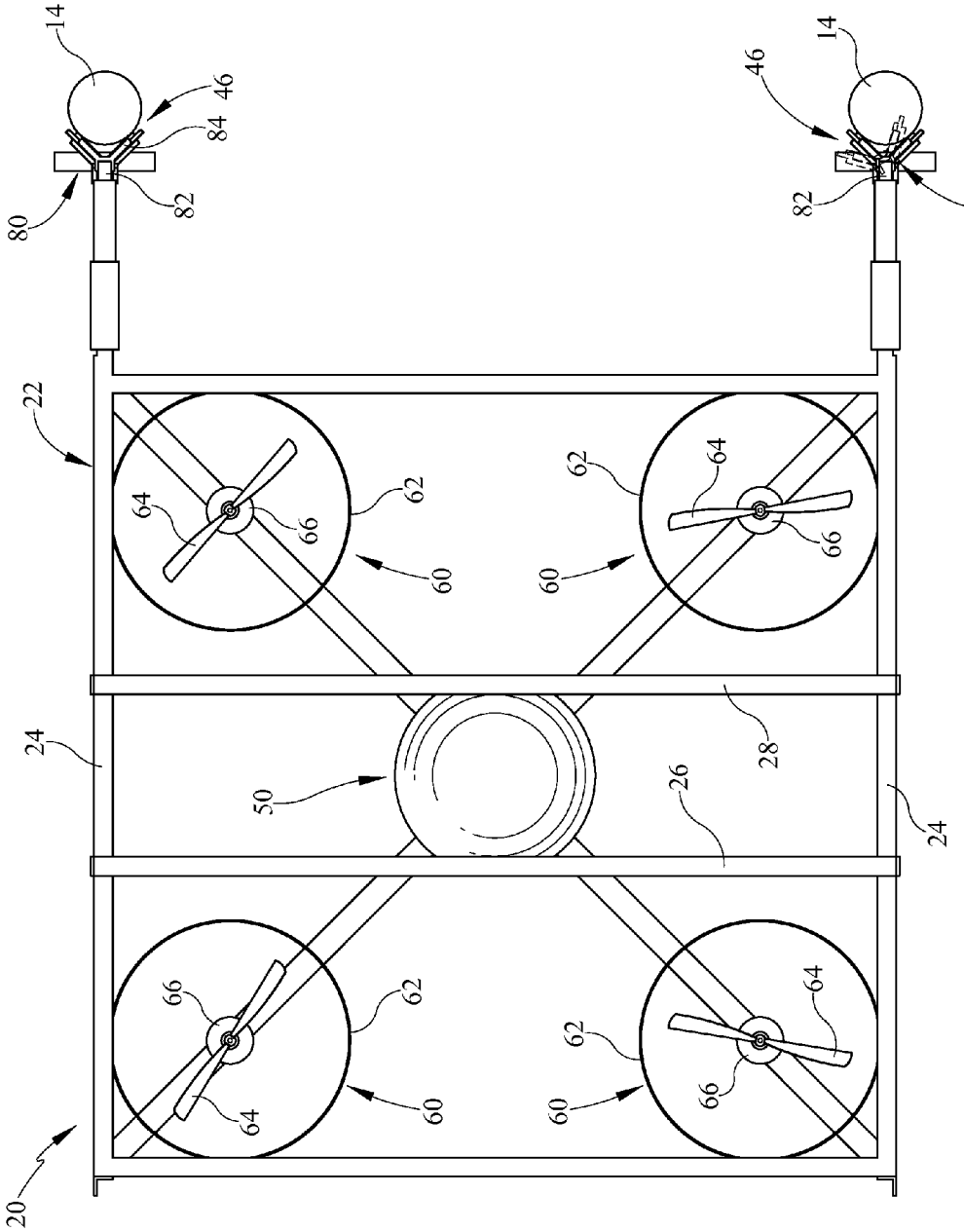

FIG. 3

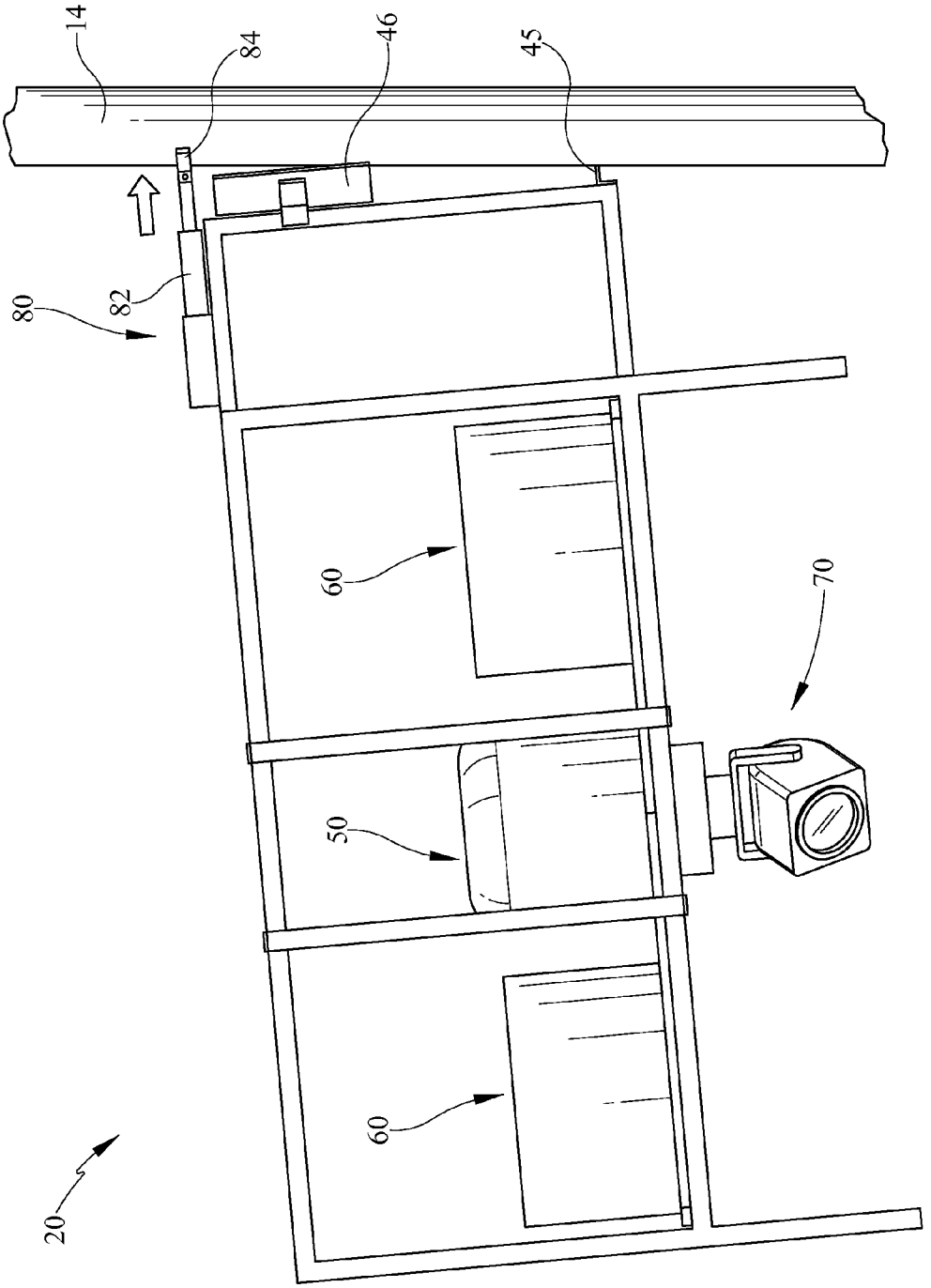

FIG. 4

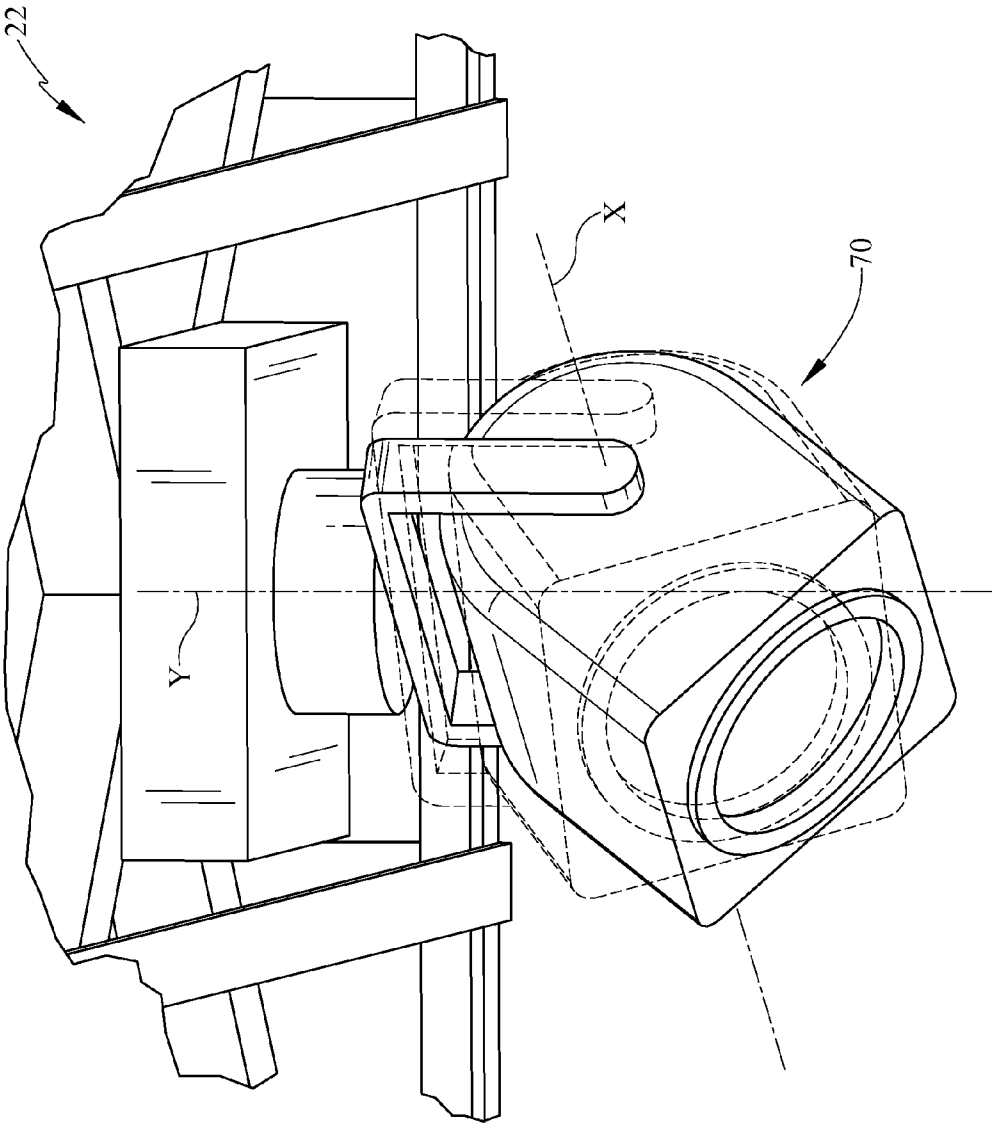

FIG. 5

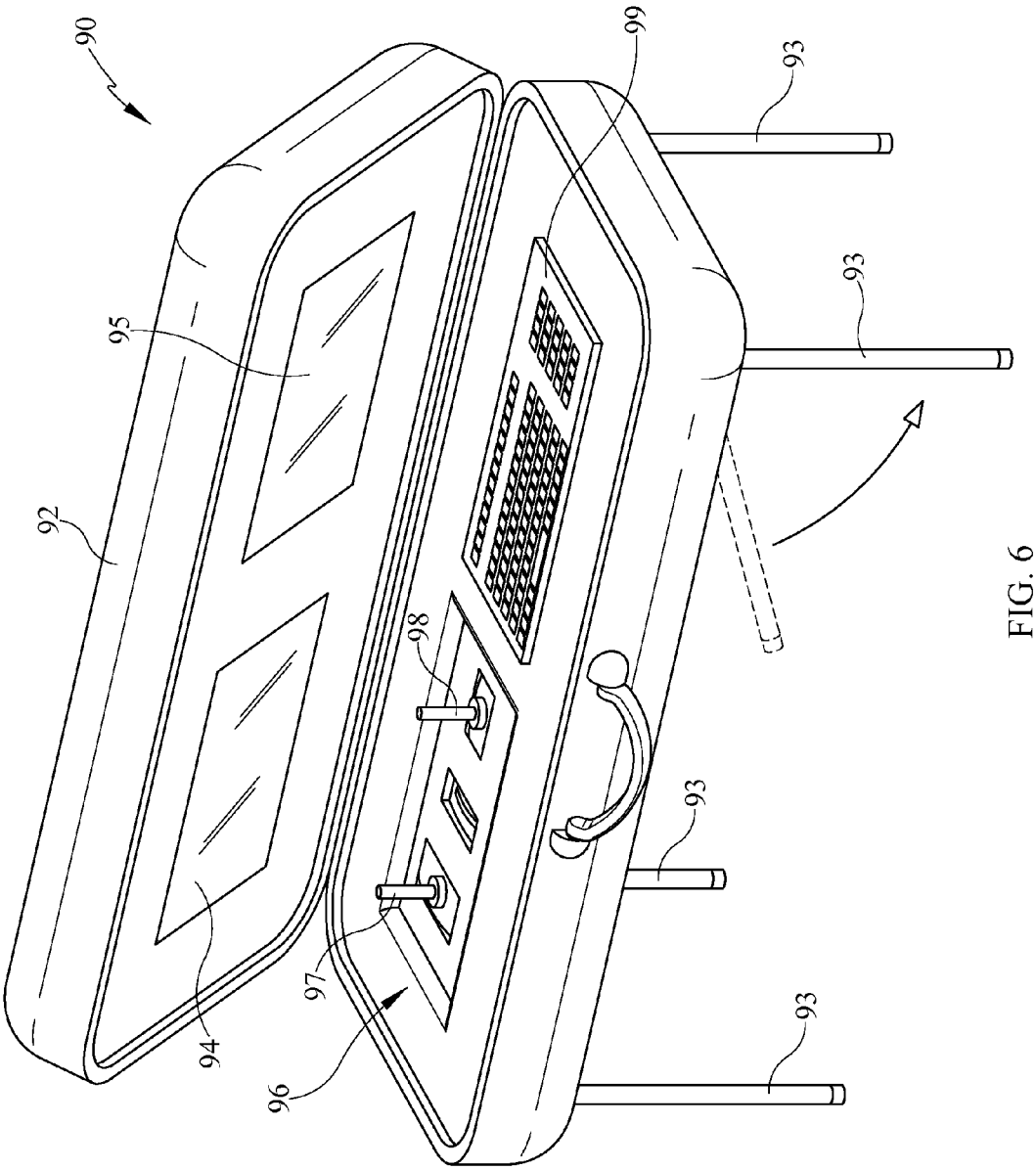

FIG. 6

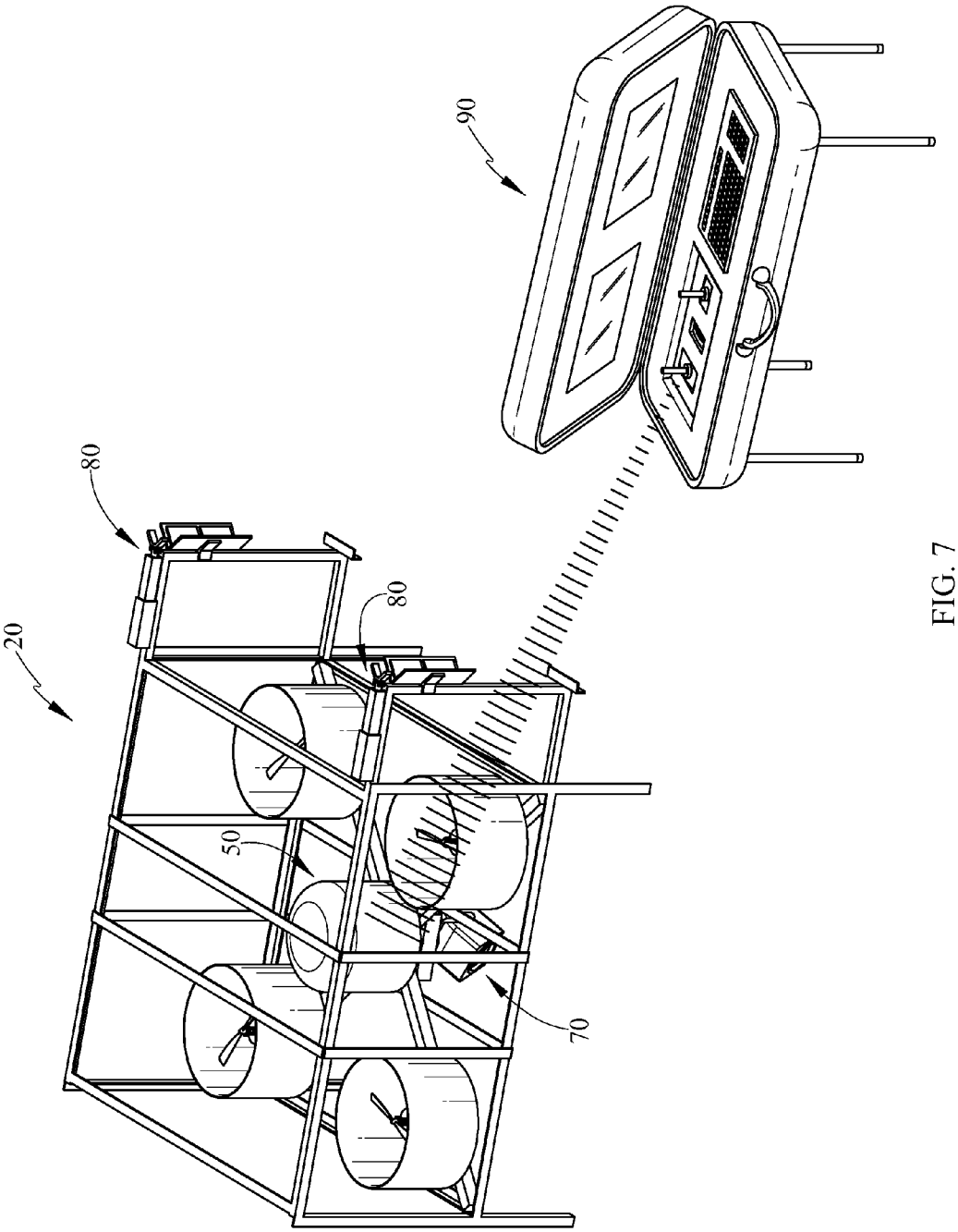

FIG. 7

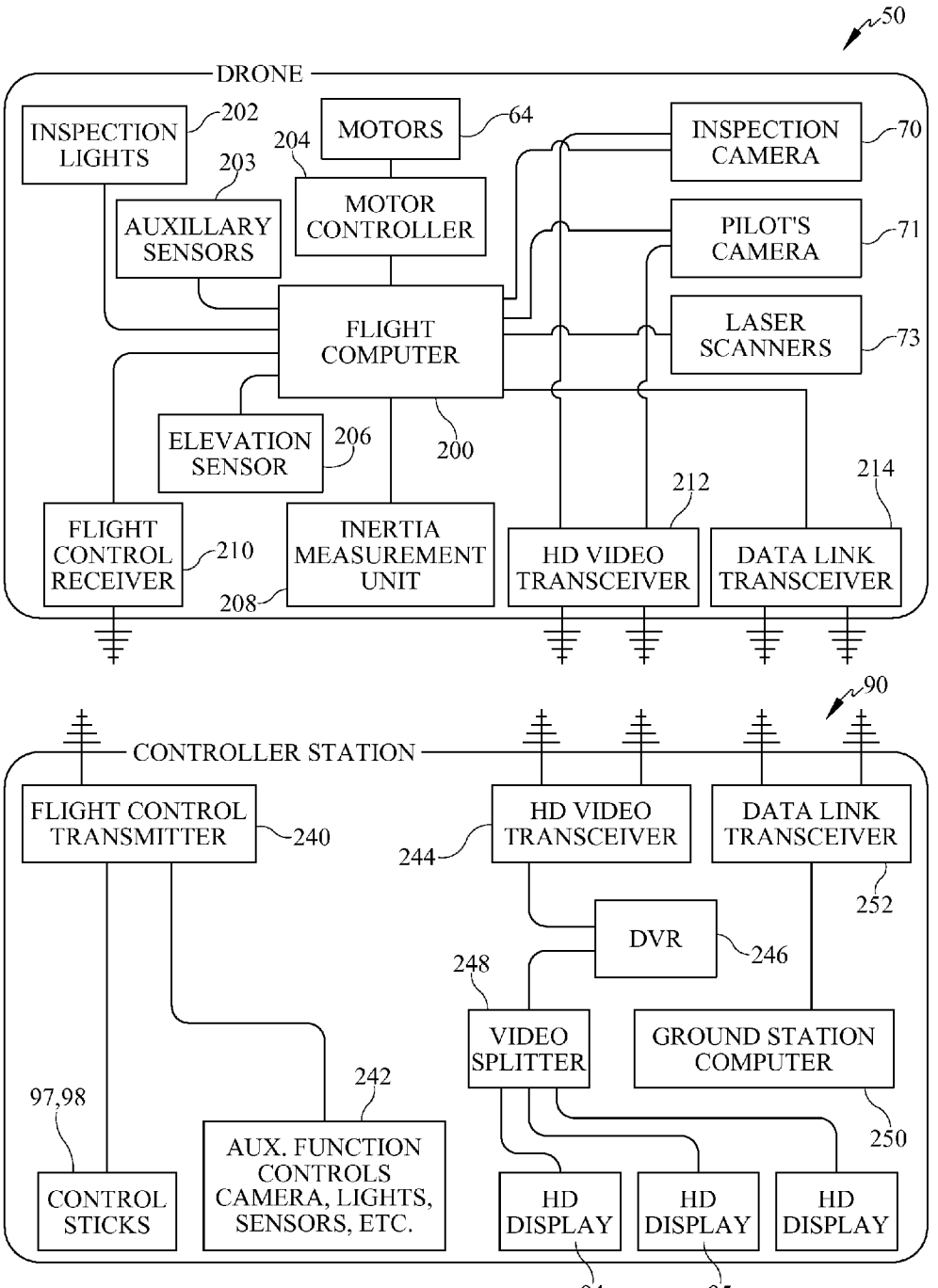
50
DRONE
INSPECTION LIGHTS
202
203
AUXILLARY SENSORS
204
MOTORS
64
MOTOR CONTROLLER
INSPECTION CAMERA
70
PILOT'S CAMERA
71
LASER SCANNERS
73
FLIGHT COMPUTER
200
ELEVATION SENSOR
206
FLIGHT CONTROL RECEIVER
210
INERTIA MEASUREMENT UNIT
208
HD VIDEO TRANSCEIVER
212
DATA LINK TRANSCEIVER
214
90
CONTROLLER STATION
FLIGHT CONTROL TRANSMITTER
240
HD VIDEO TRANSCEIVER
244
DATA LINK TRANSCEIVER
252
DVR
246
248
VIDEO SPLITTER
GROUND STATION COMPUTER
250
242
97,98
CONTROL STICKS
AUX. FUNCTION CONTROLS CAMERA, LIGHTS, SENSORS, ETC.
HD DISPLAY
HD DISPLAY
HD DISPLAY
94
95

FIG. 8

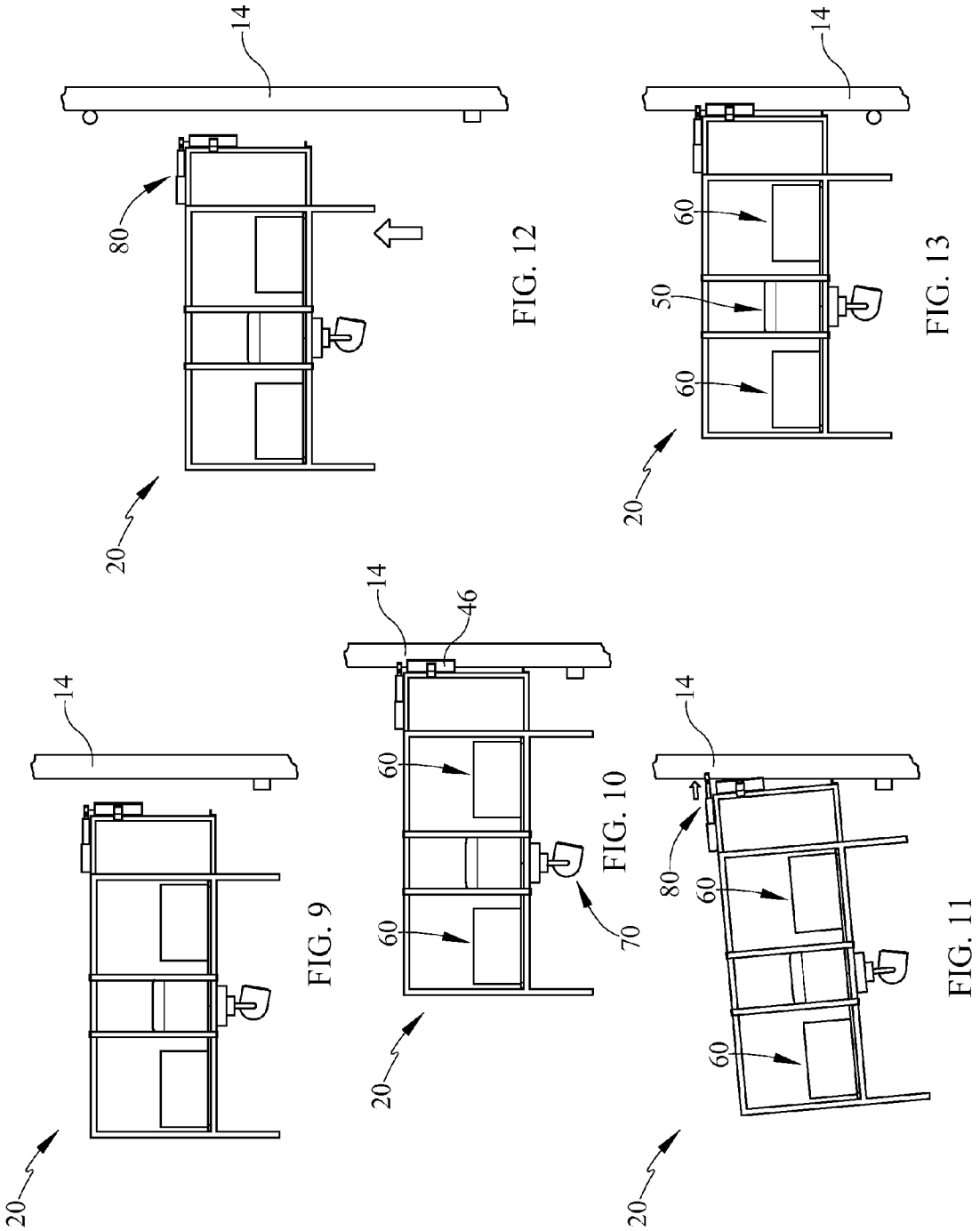

FIG. 9

FIG. 10

FIG. 11

FIG. 12

FIG. 13

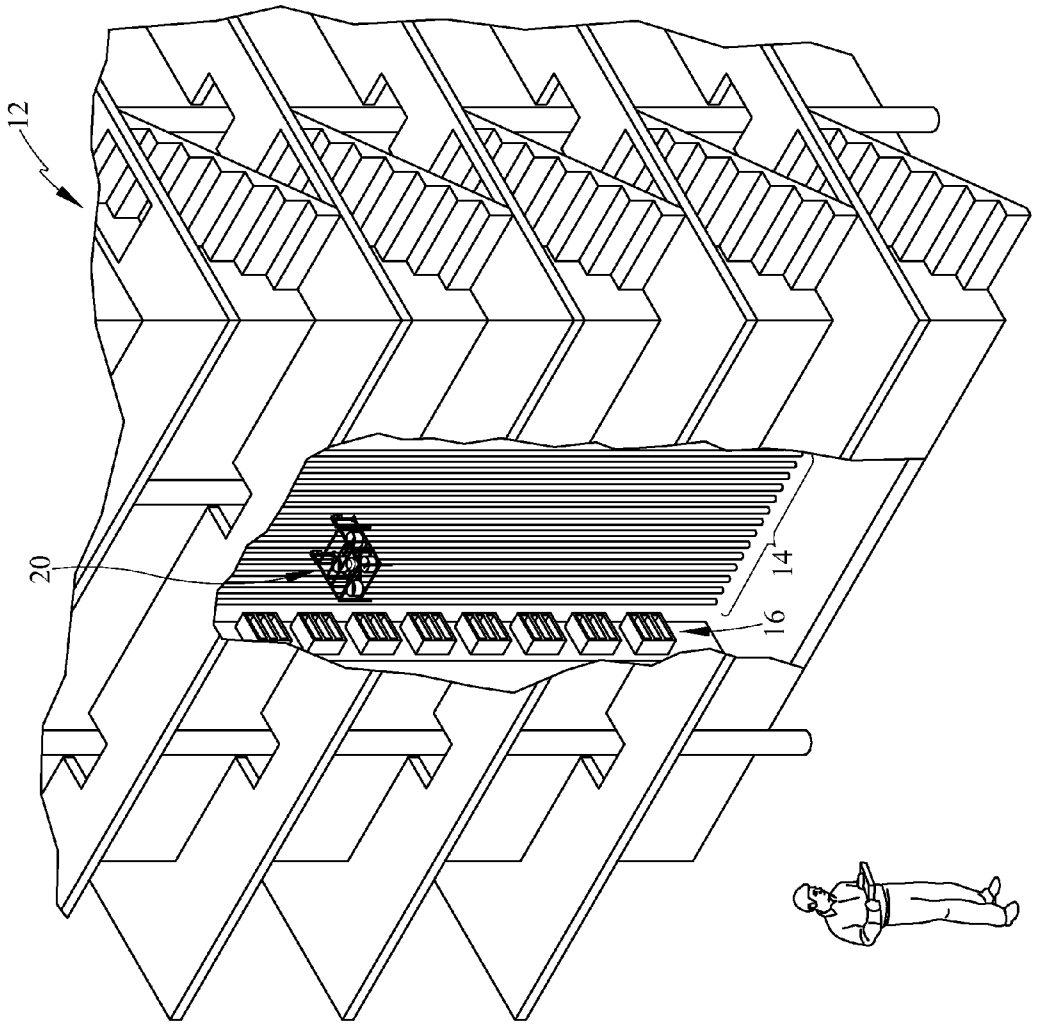

FIG. 14

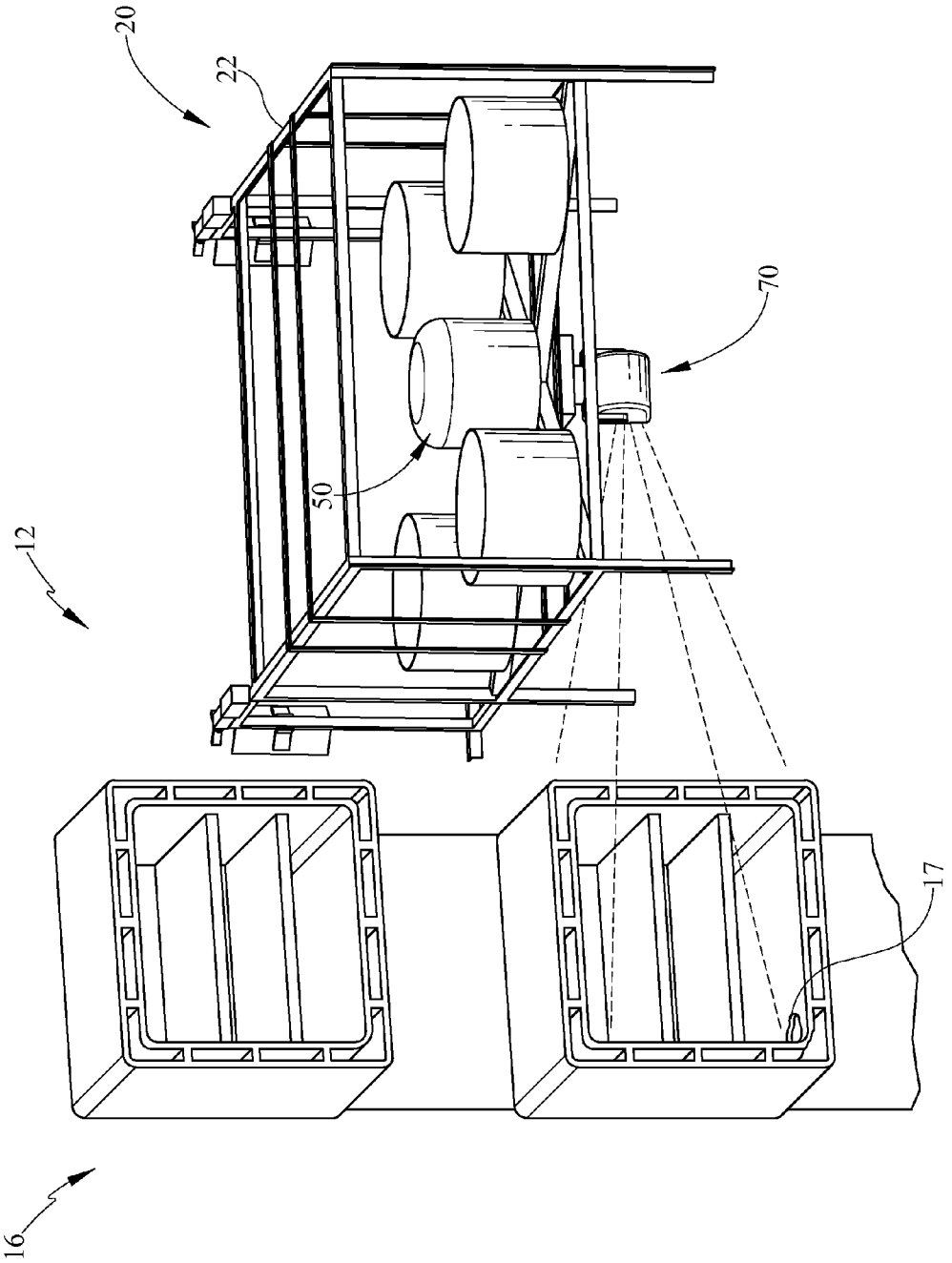

FIG. 15

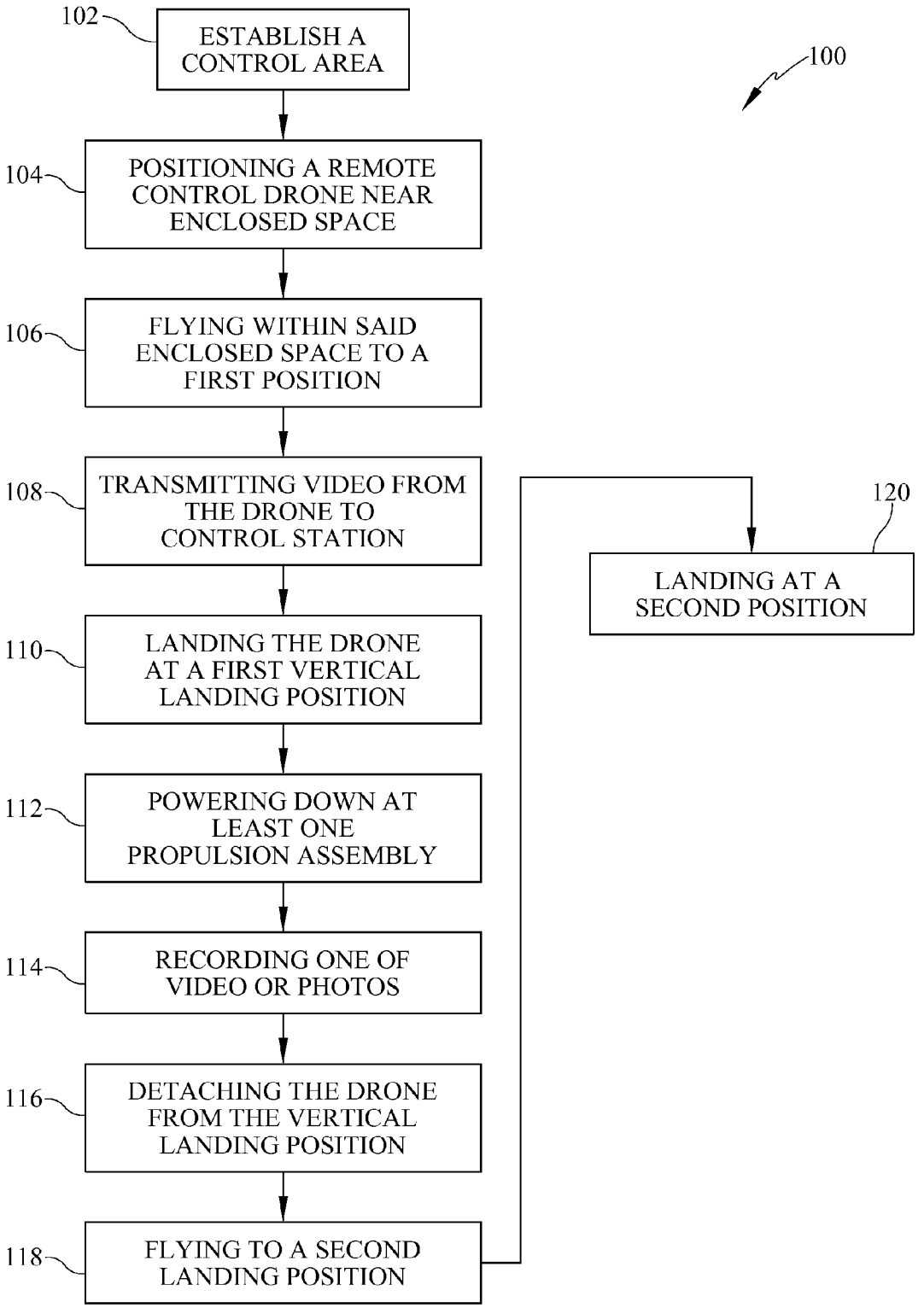
100
102
ESTABLISH A CONTROL AREA
104
POSITIONING A REMOTE CONTROL DRONE NEAR ENCLOSED SPACE
106
FLYING WITHIN SAID ENCLOSED SPACE TO A FIRST POSITION
108
TRANSMITTING VIDEO FROM THE DRONE TO CONTROL STATION
110
LANDING THE DRONE AT A FIRST VERTICAL LANDING POSITION
112
POWERING DOWN AT LEAST ONE PROPULSION ASSEMBLY
114
RECORDING ONE OF VIDEO OR PHOTOS
116
DETACHING THE DRONE FROM THE VERTICAL LANDING POSITION
118
FLYING TO A SECOND LANDING POSITION
120
LANDING AT A SECOND POSITION

FIG. 16

DRONE FOR INSPECTION OF ENCLOSED SPACE AND METHOD THEREOF

STATEMENT REGARDING FEDERALLY SPONSORED RESEARCH

None.

REFERENCE TO SEQUENTIAL LISTING, ETC.

None.

CLAIM TO PRIORITY

None.

BACKGROUND

1. Field of the Invention

Present embodiments relate to a drone device. More specifically, present embodiments relate to a drone for inspection of an enclosed space and a method thereof.

2. Description of the Related Art

The process of inspecting enclosed spaces, for example such as a boiler of a power generating turbine, is a process which is tedious, labor intensive, and provides opportunity for injury to an inspector. During the process, a scaffold must be constructed within the interior of the boiler and along the wall perimeter of the enclosed space to inspect the burners, steam piping or tubing at multiple elevations. As a result, the scaffold must be constructed level by level upon itself to move up along the sidewalls of the enclosed space for inspection of all the boiler walls or steam tubes. This requires manpower and downtime of the boiler both of which result in lost time of operation of the turbine associated with the boiler being inspected. Typically, the inspection process cannot begin until the scaffold system is constructed at least partially. However, this construction process takes time again leading to increased outage time for the boiler.

It is desirable to have a system of inspection which may begin sooner than when a scaffold construction may be completed, in order to reduce downtime of an outage.

An additional problem with inspection of the enclosed space is that the walls are generally vertical and are lined with steam tubing and/or burners along the interior surface thereof in large part. Thus, the necessity of a scaffold system provides a landing at multiple elevations wherein an inspector may be located to perform the inspection. Otherwise, the interior of the boiler is generally without landing surfaces upon which an inspector may perform the inspection thoroughly at multiple elevations.

Accordingly, it is desirable to overcome this lack of horizontal landing surface and other deficiencies with known inspection processes in order to provide a thorough inspection of the interior of a boiler while reducing downtime associated with an outage.

SUMMARY

According to some embodiments, an unmanned remote control inspection vehicle, comprises an airframe including at least one propulsion assembly, a video camera allowing for pivotal movement, a video transmitter, a controller with flight avionics to control the at least one propulsion assembly, a transceiver in communication with the controller and a remote control, a landing assembly connected to the airframe, the landing assembly having at least one support structure for

landing in a first orientation and at least one second support structure for landing in a second orientation, a detaching mechanism to release the landing assembly from a surface in one of the first and second orientations. The unmanned remote control inspection vehicle wherein the landing assembly has the at least one support structure being generally horizontal in orientation. The unmanned remote control inspection vehicle wherein the landing assembly has the at least one second support structure being generally vertical in orientation. The unmanned remote control inspection vehicle wherein the landing assembly includes a landing frame having a first strut and a second strut. The unmanned remote control inspection vehicle wherein the landing assembly includes a third and a fourth strut. The unmanned remote control inspection vehicle further comprising a retaining mechanism one of the at least one first and second support mechanism for landing in a vertical orientation. The unmanned remote control inspection vehicle wherein the retaining mechanism has magnetic landing feet. The unmanned remote control inspection vehicle wherein the magnetic feet are pivotable about a vertical axis. The unmanned remote control inspection vehicle wherein the magnetic feet are movable to change width between said landing feet.

According to an alternate embodiment, an unmanned remote control inspection vehicle, comprises an airframe including a plurality of propulsion assemblies, a controller in communication with the plurality of propulsion assemblies, a remote control in wireless communication with the controller to control flight of the vehicle, a landing structure connected to the airframe, the landing structure allowing landing on a surface parallel to a gravity force, the landing structure allowing landing on a surface perpendicular to a gravity force, a retaining mechanism on the landing structure and a detachment mechanism, a video camera onboard the vehicle for inspection. The unmanned remote control inspection vehicle wherein the retaining mechanism is magnetic. The unmanned remote control inspection vehicle wherein the detachment mechanism is a linear actuator. The unmanned remote control inspection vehicle wherein the landing structure has at least one strut in vertical orientation and at least one strut in a horizontal direction. The unmanned remote control inspection vehicle further comprising a receiver for electronic communication between the remote control and the controller. The unmanned remote control inspection vehicle wherein the video camera is mounted on a gimbal allowing at least one degree of pivot.

According to at least one further embodiment, an unmanned remote control inspection vehicle, comprises an airframe having at least one propulsion assembly, a controller in electrical communication with the at least one propulsion assembly, a receiver in communication with the controller, the receiver in wireless communication with a remote control, at least one camera for video inspection and non-line-of-flight of the vehicle, a landing structure connected to the airframe, the landing structure having a first portion defining a first outer boundary of the vehicle along a first dimensional axis and a second portion defining a second outer boundary of the vehicle along a second dimensional axis. The vehicle further comprising a rechargeable battery. The vehicle wherein the propulsion assembly includes an electric motor. The vehicle wherein the at least one camera is an inspection camera. The vehicle wherein the at least one camera includes a pilot camera.

According to some embodiments, a method of inspecting a boiler, comprises positioning a remote control unmanned aircraft adjacent an enclosed space, flying the aircraft within

the enclosed space, flying to a first position, landing the aircraft on one of a vertical sidewall or vertical steam piping within the boiler, scanning an area of the enclosed space with a video camera, powering up a propulsion assembly, detaching the vehicle from the one of a vertical sidewall or vertical steam piping within the boiler, flying the aircraft to a second position. The method further comprises flying by line of sight. The method further comprises flying by video from the video camera. The method further comprising a sending an acoustic signal toward a wall of the enclosed space to locate the aircraft. The method further comprises engaging the one of a vertical sidewall or vertical steam piping with a magnet on a landing assembly. The method further comprises recording video on the aircraft. The method further comprises wirelessly transmitting a video signal from the camera to a control station. The method further comprises recording a video signal at a control station. The method further comprises viewing video in real-time at a control station.

According to some other embodiments, a method of boiler inspection with an unmanned remote control aircraft, comprises establishing a control area for flying said aircraft, flying the aircraft within the boiler, transmitting video of the flight to the control area for guiding said aircraft, guiding the aircraft to a generally vertical landing position, landing the aircraft at the generally vertical landing position, powering down at least one propulsion assembly, scanning an area of the boiler with a camera, recording video of the scanning, detaching the aircraft from the generally vertical landing position; flying to a second landing position and, landing at said second landing position. The method further comprises powering up the at least one propulsion assembly. The method wherein the recording occurs on-board said aircraft. The method wherein the recording occurs at the control area. The method further comprises powering up the at least one propulsion assembly. The method further comprises scanning an area at the second landing area of the boiler. The method further comprises actuating an actuator to perform the detaching. The method further comprises depowering magnets to perform the detaching. The method further comprises adjusting feet for the landing. The method further comprises adjusting at least one of width, pivot about a vertical axis and pivot about a horizontal axis.

BRIEF DESCRIPTION OF THE DRAWINGS

In order that the description may be better understood, embodiments of the inspection drone and method will now be described by way of one or more examples. These embodiments are not to limit the scope of the claims as other embodiments of the inspection drone and method of use will become apparent to one having ordinary skill in the art upon reading the instant description. Non-limiting examples of the present embodiments are shown in figures wherein:

FIG. **1** is a side section view of an enclosed spaced with a drone landed on a vertical sidewall in a stable position.

FIG. **2** is a perspective view of an exemplary drone.

FIG. **3** is a top view of a linear actuator.

FIG. **4** is a side view of an embodiment of the actuator in an extended position to detach the drone from the steam pipes.

FIG. **5** is a lower perspective view of a drone with the camera shown in multiple positions.

FIG. **6** is a perspective view of the control station for flying the drone.

FIG. **7** is a perspective view of the drone and control station in communication.

FIG. **8** is a schematic representation of various components of the drone controller.

FIG. **9** is a side view of an exemplary drone positioned away from a wall of the enclosed space.

FIG. **10** is a side view of an exemplary drone positioned on the wall of the enclosed space at a first stable position.

FIG. **11** is a side view of a drone with the actuator activated for detachment of the drone.

FIG. **12** is a side view of an exemplary drone moved toward a second position away from the wall of the enclosed space.

FIG. **13** is a side view of an exemplary drone moved to the wall of the enclosed space at the second position.

FIG. **14** is a perspective view of a drone within the enclosed space with its operator outside of the enclosed space.

FIG. **15** is a perspective view of a drone flying adjacent to a burner array within a boiler for video inspection.

FIG. **16** is a flow chart depicting exemplary methods of performing an inspection of an enclosed space with a drone.

DETAILED DESCRIPTION

It is to be understood that the inspection drone with vertical attachment mechanism is not limited in its application to the details of construction and the arrangement of components set forth in the following description or illustrated in the drawings. The invention is capable of other embodiments and of being practiced or of being carried out in various ways. Also, it is to be understood that the phraseology and terminology used herein is for the purpose of description and should not be regarded as limiting. The use of "including," "comprising," or "having" and variations thereof herein is meant to encompass the items listed thereafter and equivalents thereof as well as additional items. Unless limited otherwise, the terms "connected," "coupled," and "mounted," and variations thereof herein are used broadly and encompass direct and indirect connections, couplings, and mountings. In addition, the terms "connected" and "coupled" and variations thereof are not restricted to physical or mechanical connections or couplings.

Referring now in detail to the drawings, wherein like numerals indicate like elements throughout several views, there are shown in FIGS. **1** through **16** various embodiments of a drone or unmanned aerial vehicle (UAV) are depicted. The drone is used for inspection of an enclosed space, for example in a boiler, during an outage. The use of such drone or UAV allows for faster start to the inspection process wherein maintenance does not first require construction of large scaffold systems.

Referring now to FIG. **1**, a side view of an exemplary drone or unmanned aerial vehicle (UAV) is depicted within an enclosed space **12**, such as, for example, a boiler. The exemplary boiler includes a plurality of steam tubes **14** disposed along the interior sidewall of the boiler structure. A burner or array of burners **16** (FIG. **14**) may be disposed within the sidewall providing combustion heat water or other fluid within the steam tubes **14** of the boiler **12** in a manner well understood. The view depicts the drone **20** which is disposed against a sidewall of the boiler **12** and, specifically according to the exemplary embodiment, landed on one of the steam tubes **14**.

A drone or unmanned aerial vehicle (UAV) is a flying device that is remotely piloted or controlled by a controller or controller station **90** (FIG. **6**). The drone **20** is typically unmanned and therefore requires control by a pilot at a remotely positioned location. The drone **20** may fly by operator line of sight or alternatively may fly with the aid of cameras installed on the drone or unmanned aerial vehicle (UAV). The drone **20** is generally of smaller scale dimensions than a full-size aircraft and may have one or more rotors which allow

the vehicle to fly in a manner typically associated with an airplane or as normally associated with a helicopter or quadricopter. A quadricopter may be defined as a four-rotor machine, as will be understood by one skilled in the art, and is used in the exemplary embodiments described herein. Additionally, basic piloting functions are defined for controlling flight operations of the drone by various means such as the engine thrust or actuators, ailerons or other flaps and these are dependent upon the type of flight. Further, various functions are described such as pitching, rolling, yawing and varying altitude. These functions are described relative to the X, Y and Z axes (FIG. **2**) defining an orthogonal reference system. For example, pitching is defined as tilting the drone relative to the Z axis; the pitching may occur in a forward direction or in a rearward direction opposite the forward direction. Rolling is a tilting of the drone about a X axis lying in the plane of the drone. A left roll causes the drone to move to its left and a right roll causes the drone to move to its right. Yawing is a pivoting of the drone about its vertical Y axis causing the drone to turn left or turn right. Varying altitude or elevation is a movement of the drone vertically along the vertical Y axis to either ascend or descend such as to start or stop flying or takeoff or land the drone. In order to perform these functions, the drone **20** may include a tilt detector, accelerometer or gyroscope to determine a direction of pitch, yaw, roll or sonic signal transceiver to send and receive sonic signals to determine elevation or change of elevation. The control of the drone may utilize wired or wireless technology. According to exemplary embodiments, the controller is in communication with a receiver of the drone by wireless means such as Wi-Fi standards, blue-tooth standards or other known radio frequency control means. The drone may include stabilization technology to provide stabilized flight such as leveling and hovering at a preselected elevation or relative to a specific structure. The system provides stabilization of the drone in hovering flight, for example, in the absence of any user input to a remote control. When automatically stabilized in hovering flight, the drone **20** allows even inexperienced pilots the ability to pilot the drone without needing to act directly using traditional flight controls. Therefore, the pilot may take advantage of intuitive piloting based on simple horizontal and vertical movements of the controller. The flight of the drone is therefore transformed into movement between successive equilibrium points through the use of simple commands such as climb, descend, left, right, forward or backward, etc. Thus, the stabilization system provides corrections that are needed to maintain at stationary points by "trimming" or making numerous corrections due to external affects such as air movement and drift of the drone.

The drone **20** includes an airframe **22** having a plurality of members **24**, **26**, **28**, **30**, **32**, **34**. The airframe **22** further comprises a vertical landing assembly **40** which includes at least one support structure or member **42** for landing drone on a first landing surface orientation and a second support structure or member **44** for landing the drone **20** on a second landing surface orientation. The landing assembly **40** structures **42**, **44** maybe integrally formed with the other members of the drone **20** or may be formed separately. Relative to this view for example, the structures **42** may be used to land on a generally horizontal surface. Alternatively, the structures **44** are, for example, allow landing on a generally vertical surface.

The drone **20** also comprises a controller **50** which comprises a microprocessor or computer with various flight avionics to aid in the control of the drone **20**. The drone **20** also comprises at least one propulsion assembly **60** to cause flight of the drone **20** and allow for yaw movement, pitch movement, roll, and the elevation change orientation.

The drone **20** also comprises at least one camera **70** which is utilized to inspect the interior portions of the boiler **12** and the surfaces of the steam tubes **14** as well as aid in non-line-of-sight flight of the drone **20**. In some embodiments, the at least one camera **70** may include a second pilot camera **71** which may be mounted with the camera **70** or in a different location of the drone **20**. The pilot camera **71** may be utilized if the drone is flown in a non-line-of-sight scenario.

Referring now to FIG. **2**, a perspective view of the drone **20** is depicted for better understanding of the structures of the unmanned aerial vehicle (UAV). The airframe **22** is generally rectangular box-shaped and formed of lightweight material such as plastics, carbon-fiber or lightweight alloys. The members **26**, **28** may be rectangular and extend about the entire airframe **22** or may be formed of singular structures or members that are connected individually to members **24**, **30** and other members of the airframe. Although a rectangular box-shaped airframe **22** is depicted, alternate shapes may be utilized and the depicted embodiment is merely exemplary of one airframe structure which houses or protects various assembly structures defining the drone **20**.

The drone **20** of the instant exemplary embodiment is a quadricopter, meaning the device has four propulsion assemblies **60**. Each of the propulsion assemblies **60** includes a cowling **62** which surrounds a propeller **64**, improving thrust and also protecting the propellers **64** from unintended strikes. Optionally, the cowlings **62** may be removed, as shown in the upper right exemplary assembly **60** of FIG. **2** depending on the efficiency, control, weight issues. The exemplary propellers **64** have two blades. However, various designs may include additional numbers of blades. The propulsion assemblies **60** further comprise motors **66** disposed beneath the propellers **64** to provide torque to the propellers and the thrust from the propulsion assemblies **60**.

A controller **50** is positioned centrally within drone **20** and is generally low in the assembly to lower the center of gravity in the height direction of the drone **20**. Cross members **36**, **38** are disposed beneath the controller **50** and extending the propulsion assemblies **60**. These members **36**, **38** provide strength for the drone **20** and additionally provide a conduit path for electrical conductors. Beneath controller **50** is the camera **70** which is mounted on a gimbal and rotatable about a vertical axis as well as about a horizontal axis to provide various degrees of movement in multiple directions for improved inspection and flight control. The drone **20** may further comprise a battery for use in powering the device for flight and inspection operations.

Also, connected to the airframe **22** is a landing assembly **40** having at least one support structure **42** which allows the unmanned aerial vehicle (UAV) to land on a generally horizontal surface. The support structures **42** are generally vertical. This allows for landing of the drone **20** on surfaces which are horizontal or at some angle relative to horizontal.

A second support structure **44** is generally vertical to allow for the drone **20** to land on surfaces or structures that are also generally vertical. The support structure **44** of the exemplary embodiment includes a retaining mechanism **46** which according to the exemplary embodiment comprises one or more magnets **48**. The magnets **48** are mounted on an angle iron shaped bracket such that retaining mechanism **46** and magnets **48** may grasp or urge the drone **20** into tangential engagement with steam tubes **14** along the interior surface of the boiler **12**. At a lower end of the supports **44** are spacers **45** which position the lower end of the drone **20** away from the vertical surface to compensate for the retaining mechanism

46. Thus, the spacers **45** position the lower end of the structure **44** at the same distance from the steam tube **14** as the top end of the structure **44** and retain mechanism **46**. The magnets **48** may be permanent magnets or may be electromagnets which are powered or depowered to retain or disengage from the wall or tubes of the enclosed space **12**.

Referring now to FIG. **3**, a top view of the drone **20** is depicted with a view depicting movement of the retaining mechanism **46**. As shown in the depicted embodiment, the retaining mechanism **46** may pivot about a vertical axis so as to improve engagement of magnets **48** with the steam tubes **14**. The pivoting motion of the retaining mechanism **46** is shown by the various positions depicted in broken line relative to the position depicted in solid line. Thus, if the retaining mechanism **46** engages the steam tube **14** in an off-centered position, the retaining mechanism **80** will pivot so as to center itself relative to the steam tube **14** as depicted in the upper embodiment shown in the figure. Optionally, the support structures **44** may also be formed to be movable manually or automatically toward or away from one another to accommodate different spacing between steam tubes **14**.

Additionally, the drone includes a detachment mechanism **80**. The mechanism includes an actuator **82** which moves linearly to engage or disengage the retaining mechanism **46** from the steam tube **14**. The actuator is connected to a push member **84** which engages the steam tube **14** when the actuator **82** moves.

Referring still to FIG. **3**, the actuators are located on members of the airframe **22**. The retaining mechanisms **80** may also be moveable in a direction either toward or away from one another. This will allow for use with piping of varying spacing which may be found in different boilers. Thus, while the center distance between tubes **14** may differ, the movement of retaining mechanisms **80** in a direction toward and away from one another will compensate for differentiation of size in the direction between steam tubes **14**.

With reference to FIG. **4**, the detachment mechanism **80** is shown in operation. The actuator **82** is extended so that push member **84** engages steam tube **14**. As depicted, the drone **20** pivots on element **45** as the magnets **84** detach from the tube **14**.

During this time, the controller **50** powers the propulsion assemblies **60** upwardly so that at time of the detachment of retaining elements **46**, the drone **20** does not uncontrollably fall but instead enters a controlled hover upon s separation from the static structure, for example the steam tubes **14** or sidewall of boiler **12**.

Referring now to FIG. **5**, a detailed perspective view of the camera **70** is depicted. The camera **70** may be an high definition camera having a CMOS chip and resolution of 720p, 1080i or 1080p. The camera **70** may also allow still photographs in addition to video footage. The camera is mounted on a gimbal or other pivoting structure to allow rotation about 2 axes, the X-axis and the Y-axis for example. The camera **70** is shown in solid line in a first position. However, the camera **70** is also shown rotated slightly about the vertical axis in a broken line. Additionally, the camera is rotated about the horizontal X-axis in the position shown in the same broken line. The camera **70** may be rotatable about 360° about the vertical axis and about 200° about the X-axis. The camera **70** is located beneath the airframe **22** to provide an unobstructed view when operating. However, the camera **70** may be moved to various locations of the drone **20** and the depicted position should not be considered limiting. Additionally, the camera **70** may be moveable in a third dimension that is linearly along near the X or Y axis to provide improved viewing clarity.

Referring now to FIG. **6**, a perspective view of a controller station **90** is depicted including a housing **92** which may be hingeably openable or closeable and may include legs **93** for ease of setup. The legs **93** may be foldable between a closed and extended position. Various forms of extendable legs may be utilized such as retractable, nestable, or pivotable between opened and closed positions, as depicted. The housing interior includes at least one video monitor **94**. The control station **90** includes at least one video monitor **94** through which the video footage of camera **70** may be viewed during operation of the drone **20**. A second video monitor **95** may be utilized to perform programming at edits for the processor within the controller **50** of the drone **20**. This monitor **95** may be also utilized to control other features such as stability, functionality of the drone **20**, and other onboard software or firmware used to operate the drone **20**. A controller **96** is shown having a first control stick **97** and a second control stick **98**. The first stick may control the throttle as well as one of yaw, pitch and elevation change. The second stick **98** may control the other remaining pair of yaw, pitch and elevation change. Other features may be provided on the controller **96** such as power level of a battery for the control station **90** as well as battery monitoring for the onboard battery of the drone **20**. The controller station **90** may also include a transmitter to send flight control signals to the drone **20**. Additionally, the control station **90** may include one or more receiver to receive signals from the drone **20** as well as video signals. A keyboard **99** may also be utilized from the control station **90** to allow for the programming and changes to the onboard avionics previously described.

The control station **90** may also include means to record the video or photos of camera **70**. This media may be stored on a flash drive, USB card, hard drive or media storage device.

Referring now to FIG. **7**, a perspective view is shown of the drone **20** in combination with the control station **90**. A wireless signal is shown emitting from the control station **90** and extending to the drone **20**. The control station **90** also includes a wireless transmitter which may be, for example, Wi-Fi, blue-tooth, radio frequency (RF), or other such signal transmitter. The drone controller **50** receives the signal and includes a transmitter for wireless transmission of the video signal of the camera **70** back to the control station **90**. Further, the controller station **90** may be utilized to control the actuators **82** of the detaching mechanism **80**.

Referring now to FIG. **8**, a schematic view of the drone controller **50** and controller station **90** is depicted for aid and understanding the signals transmitted between the drone **20** and the controller station **90**. Referring first to the drone controller **50**, a flight computer **200** is located within the controller **50** designated by the housing in the various views of the drone **20**. The flight computer may be defined by microprocessor or other computer processing circuit. Various circuits and functions are associated with the flight computer **200**. The drone **20** may include inspection lights **202** to aid in brightening a darkened enclosed space **12** and improve the inspection process. The flight computer is also in communication with motor controllers **204** which drive the motors **64** of the propulsion assemblies. Additionally, while the drone **20** has been described have a camera **70**, according to optional embodiments, multiple cameras may be utilized. For example, the inspection camera **70** may be in communication with the flight computer **200** as well as a pilot camera **71**. Laser scanners **73** may be utilized to determine distances from the walls of the enclosed space **12**. In such operation, the laser **73** emits a beam at a wall and based on time interval for receiving a reflected beam, the processor **200** can determine a distance the drone **20** is located from the interior wall of the

enclosed space **12**. The flight processor **200** may also be electrically connected to an elevation sensor **206**. The elevation sensor **206** may be defined by a barometer, an ultrasonic sensor, a laser as previously described or a GPS system. Additionally connected to the flight computer **200** is an inertia measurement unit **208**. The inertia measurement unit **208** utilizes various circuits to stabilize the drone **20** in flight. For example, this may include a barometer, a three-axis gyro, and three-axis accelerometer. Thus the user may provide flight input and the inertia measurement unit **208** may maintain stable attitude of the drone **20**. The barometer may be in a separate unit or part of the inertia measurement unit and stabilizes the drone at altitude.

Additionally, the flight computer **200** is in electrical communication with multiple receivers, transmitters, or transceivers. A flight control receiver **210** receives flight control from a transmitter in the control station **90**. More specifically, this receiver receives signals for control of the drone in the various flight directions previously described, for example pitch, yaw, roll and elevation change or thrust increase or decrease. Additionally, at least one camera is connected to a high definition video transceiver **212**. The transceiver receives video signal from the inspection camera **70** and the pilot camera **71** and wirelessly transmits such signals back to the control station **90**. Similarly, a data link receiver **214** is connected to the flight computer. This receiver transmits flight data from the computer **200** to the control station **90** for viewing on the monitor **95** or alternatively for recording a subsequent review of flight data information related to the drone. For example, one part of the data may be related to altitude, battery life or relative distance between obstructions within the enclosed space **12**.

Referring now to the control station **90** a plurality of transmission and receiving structures are utilized in the control station **90** to fly the drone **20** as well as receive and transmit data to the drone from the drone and to the drone such as flight data and video signals. The control station includes a flight control transmitter **240**. The transmitter **240** includes attitude and altitude controls previously described as control sticks **97**, **98**, for example. The flight control transmitter **42** may include auxiliary function controls **242** such as for camera, lights and sensors. Also located in the control station is at least one high definition video transceiver **244** which sends and receives signals to the transceiver **212** on the drone and may be primarily used to receive video signals from the inspection camera **70** and pilot camera **71** for further recording. As previously described, the recording process may occur on the drone or may occur at the control station **90**. A digital video recorder (DVR) **246** is depicted on a control station **90** but as previously described, may alternatively be located on the drone **20**. The DVR may include a video splitter **248** for the multiple displays **94**, **95** on the control station **90**. A third display is depicted in the schematic representation of FIG. **8**. However, any number of displays may be utilized. The control station may include a computer or other processing device **250** which is in communication with the DVR **246**, videos **42**, **48** as well as the transceiver **244** and a data link transceiver **252**.

The data link transceiver receives and transmits signals from and to the data link transceiver **214**. These schematic representations are merely one embodiment of a variety of electrical hardware which may be utilized to fly the drone **20** and perform the inspections as desired.

Referring now to FIGS. **9-13**, a sequence of movements of the drone **20** is depicted for landing the drone **20** on a surface which is vertical or substantially vertical, such as the interior wall of an enclosed space **12**, for example a boiler. In the instant embodiment, the interior wall includes a plurality of steam tubes **14**, as previously described and the drone **20** is depicted landing upon at least one of the steam tubes **14**. In order to perform an inspection of an enclosed space, the drone **20** approaches the steam tube **14** at a preselected height where inspection is to occur. The drone **20** may include a light to shine upon the wall of the enclosed space **12** or the steam tubes **14** to improve illumination and visual inspection by way of video means. The drone **20** in the instant figure approaches the steam tubes **14** and moves toward the steam tubes **14**.

With reference now to FIG. **10**, the drone approaches closer to the steam tube **14** until the magnets **48** of the retaining mechanism **46** urge the drone **20** into engagement with the tubes **14**. In this position, the propulsion assembly **60** may be powered down to conserve battery power and the camera **70** may scan the area visible adjacent to the drone **20** at the position where the drone **20** is engaging the steam tubes **14**. Once the video scan or photograph(s) of the area is complete, the drone **20** is detached from the steam tubes **14**.

Referring now to FIG. **11**, the detachment mechanism **80** is shown forcibly disengaging the drone **20** from the tube **14** by actuating and pushing the drone from the tube **14**. As depicted in the embodiment, the drone **20** is tilted back away from the tubes **14** as the magnetic force breaks the drone **20** away from the tubes **14**. During the actuation process of the detachment mechanism **80**, the propulsion assembly **60** may be powered up. This may occur through an interlock procedure such as a programmable logic controller in the drone controller **50** which causes the engines to power up during an outward actuation procedure of the detachment mechanism **80**. Thus, when the magnets break free of engagement with the steam tubes **14**, the drone **20** will not fall but instead will hover due to the propulsion provided by the assemblies **60**. However, one skilled in the art that other retaining forces may be utilized, such as clamping force or alternate features.

Referring now to FIG. **12**, the drone **20** is moved toward a second elevation. This movement is depicted by a vertical arrow, for example. Additionally, the drone **20** may move in any degree of freedom such horizontally toward or away from the steam tube **14** or into or out of the page as depicted in the embodiment. Any of these positions may represent a second position, relative to the first position in FIGS. **9** and **10**. At the second position, the drone **20** moves toward the steam tubes **14** and the magnetic engagement of the retaining mechanism **46** causes grasping of the tubes **14** at this second location. Once the drone **20** is retained at the second position, the propulsion assemblies **60** are powered down to again conserve power and the video camera **70** may do a video scan of the area adjacent this second position for video transmission and inspection. The video transmission may occur and video may be recorded on board the drone, such as to a USB flash drive, for example, or other storage device, or the transmission may allow for recording at the controller station **90**. Once the video inspection is done at the second location depicted in FIG. **13**, the detachment mechanism **80** is actuated as depicted in FIG. **11** to detach the drone **20** and allow for movement to a third position, and so on.

Referring now to FIG. **14**, a perspective view of an exemplary boiler **12** is depicted with a false section cut away to depict the interior portion of the boiler including the steam tubes **14** and a burner array **16**. The drone **20** is shown in a position wherein the drone has landed on the vertical piping array of steam tubes **14**. The drone **20** may alternatively detach as previously described to investigate multiple positions along the steam tube array **14** or to inspect the multiple burners along the burner array **16**. A user **18** is shown adjacent

to the boiler **12** with a remote control system so that the drone **20** may be flown without line of sight view of the unmanned aerial vehicle (UAV). As an alternative, the user **18** may be within the boiler **12** and in visual contact with the drone **20** during use, but such is not absolutely necessary due to the video feedback between the drone **20** and the control station **90**.

Referring now to FIG. **15**, the drone **20** is shown in flight with the camera **70** during a visual inspection of a single burner on the array **16**. An exemplary hole **17** depicts damage on one of the burners being inspected and such damage is of the exemplary type that the drone **20** would be utilized to inspect. The drone **20** may inspect these burners **16** by hovering at a specific position adjacent to the burners or alternatively may be retained on the boiler wall adjacent to the burner array **16** and rotate the camera in such a manner as to inspect each of the burners.

The drone **20** may include ultrasonic or other sonar signal emitting structures to locate the drone and maintain the drone in a specific position relative to the walls of the enclosed space. The ultrasonic emitting structure may be located within the drone controller **50** or may be located at one or more positions of the drone either interior of or exterior of the airframe **22**. With the sonic emitting signal structure, the drone may be controlled in enclosed spaces within distances that are less than typical GPS units, generally about 3 meters.

Upon completing the process of moving through the various positions of the enclosed space **12**, the various photos and video footage may be viewed by inspectors, in real-time or after the flight, and a report created. For example, each burner of the array may be documented in the report by photo and comments of the maintenance condition. For example, as related to the damaged burner tip shown with the erosion **17** (FIG. **15**) a report entry may be prepared as follows.

LOCATION	REPAIR RECOMMENDATION OR CONDITION
C' Coal Nozzle	Plan For Future Replacement of Tip due to small erosion hole in the lower left corner CP Nozzle - monitor the mild erosion in both lower corners

A plurality of these type of comment boxes, with or without photos, may be included in the report. Each of the boxes may define an inspection region of the enclosed space **12** so that a plurality of the comment boxes corresponds to a mapping or layout of the entire enclosed space. Thus a report is created for the entire volume of the enclosed space **12** by inspection of the plurality of small inspection areas.

Referring now to FIG. **16**, a flow chart depicts a method of inspecting an enclosed space **12** with a drone or inspection vehicle **20**. The method **100** comprises establishing a control area **102** for the control station **90** and establishing a communication link between the drone **20** and the control station **90**. Next, the remote control drone **20** is positioned **104** near an enclosed space **12**. This positioning may be inside or outside of the enclosed space **12** and the control area which is established in **102** may alternatively be inside or outside the enclosed space depending on the type of flight—either of line-of-sight or non-line-of-sight flight. Next, the drone **20** is flown **106** within the enclosed space **12** to a first position. The first position may be any of various positions depending on the layout of the inspection process being performed. Next, video is transmitted **108** from the drone **20** to the control station **90**. This transmission may occur prior to the flying of step **106** if the flight will be non-line-of-sight flight. Thus, the video linkage may need to be established prior to takeoff or immediately after takeoff. If necessary, the video is transmitted at step **108** from the drone **20** to the control station **90**.

Next, the drone **20** lands **110** at a first landing position. This landing position may be on a vertical structure or surface or a substantially vertical structure or surface. Once the drone **20** lands at step **110**, the at least one propulsion assembly may be powered down at step **112**. This allows conservation of battery power for the device. Next, the camera **70** scans or inspects, at step **114**, an area of the enclosed space **12**. This may be recorded as video or may be recorded in the form of one or more photos of the area being inspected. When the scanning occurs, the video or photos are recorded at step **116**. This recording process may occur onboard the drone **20** or at the control station **90** following transmission to the control station from the drone. Upon completion of the inspection of an area at step **114**, the drone **20** is detached at step **118** from the generally vertical landing position. Prior to this detaching, it may be desirable to power up the at least one propulsion assembly **60** so that the drone **20** can detach in a controlled manner without falling a vertical distance. Next, at step **120**, the drone **20** is flown to a second landing position which again, may be a generally vertical surface or structure or alternatively may be a horizontal landing surface. The drone **20** lands **122** at the second position wherein the propulsion assembly **60** may be powered down and an inspection or scanning may be performed as previously described. This process continues until the entire enclosed space **12** or the areas of interest within the enclosed space **12** are fully inspected.

It should be noted that at any time during this method **100** the drone **20** may perform inspection by hovering at desired locations to perform the inspection or scanning with the camera **70**. Such method is also within the scope of the instant embodiments.

While several inventive embodiments have been described and illustrated herein, those of ordinary skill in the art will readily envision a variety of other means and/or structures for performing the function and/or obtaining the results and/or one or more of the advantages described herein, and each of such variations and/or modifications is deemed to be within the scope of the invent of embodiments described herein. More generally, those skilled in the art will readily appreciate that all parameters, dimensions, materials, and configurations described herein are meant to be exemplary and that the actual parameters, dimensions, materials, and/or configurations will depend upon the specific application or applications for which the inventive teachings is/are used. Those skilled in the art will recognize, or be able to ascertain using no more than routine experimentation, many equivalents to the specific inventive embodiments described herein. It is, therefore, to be understood that the foregoing embodiments are presented by way of example only and that, within the scope of the appended claims and equivalents thereto, inventive embodiments may be practiced otherwise than as specifically described and claimed. Inventive embodiments of the present disclosure are directed to each individual feature, system, article, material, kit, and/or method described herein. In addition, any combination of two or more such features, systems, articles, materials, kits, and/or methods, if such features, systems, articles, materials, kits, and/or methods are not mutually inconsistent, is included within the inventive scope of the present disclosure.

All definitions, as defined and used herein, should be understood to control over dictionary definitions, definitions in documents incorporated by reference, and/or ordinary meanings of the defined terms. The indefinite articles "a" and "an," as used herein in the specification and in the claims,

unless clearly indicated to the contrary, should be understood to mean "at least one." The phrase "and/or," as used herein in the specification and in the claims, should be understood to mean "either or both" of the elements so conjoined, i.e., elements that are conjunctively present in some cases and disjunctively present in other cases.

Multiple elements listed with "and/or" should be construed in the same fashion, i.e., "one or more" of the elements so conjoined. Other elements may optionally be present other than the elements specifically identified by the "and/or" clause, whether related or unrelated to those elements specifically identified. Thus, as a non-limiting example, a reference to "A and/or B", when used in conjunction with open-ended language such as "comprising" can refer, in one embodiment, to A only (optionally including elements other than B); in another embodiment, to B only (optionally including elements other than A); in yet another embodiment, to both A and B (optionally including other elements); etc.

As used herein in the specification and in the claims, "or" should be understood to have the same meaning as "and/or" as defined above. For example, when separating items in a list, "or" or "and/or" shall be interpreted as being inclusive, i.e., the inclusion of at least one, but also including more than one, of a number or list of elements, and, optionally, additional unlisted items. Only terms clearly indicated to the contrary, such as "only one of" or "exactly one of," or, when used in the claims, "consisting of," will refer to the inclusion of exactly one element of a number or list of elements. In general, the term "or" as used herein shall only be interpreted as indicating exclusive alternatives (i.e. "one or the other but not both") when preceded by terms of exclusivity, such as "either," "one of," "only one of," or "exactly one of." "Consisting essentially of," when used in the claims, shall have its ordinary meaning as used in the field of patent law.

As used herein in the specification and in the claims, the phrase "at least one," in reference to a list of one or more elements, should be understood to mean at least one element selected from any one or more of the elements in the list of elements, but not necessarily including at least one of each and every element specifically listed within the list of elements and not excluding any combinations of elements in the list of elements. This definition also allows that elements may optionally be present other than the elements specifically identified within the list of elements to which the phrase "at least one" refers, whether related or unrelated to those elements specifically identified. Thus, as a non-limiting example, "at least one of A and B" (or, equivalently, "at least one of A or B," or, equivalently "at least one of A and/or B") can refer, in one embodiment, to at least one, optionally including more than one, A, with no B present (and optionally including elements other than B); in another embodiment, to at least one, optionally including more than one, B, with no A present (and optionally including elements other than A); in yet another embodiment, to at least one, optionally including more than one, A, and at least one, optionally including more than one, B (and optionally including other elements); etc.

It should also be understood that, unless clearly indicated to the contrary, in any methods claimed herein that include more than one step or act, the order of the steps or acts of the method is not necessarily limited to the order in which the steps or acts of the method are recited.

In the claims, as well as in the specification above, all transitional phrases such as "comprising," "including," "carrying," "having," "containing," "involving," "holding," "composed of," and the like are to be understood to be open-ended, i.e., to mean including but not limited to. Only the transitional phrases "consisting of" and "consisting essentially of" shall be closed or semi-closed transitional phrases, respectively, as set forth in the United States Patent Office Manual of Patent Examining Procedures, Section 2111.03.

The foregoing description of several methods and an embodiment of the invention has been presented for purposes of illustration. It is not intended to be exhaustive or to limit the invention to the precise steps and/or forms disclosed, and obviously many modifications and variations are possible in light of the above teaching. It is intended that the scope of the invention and all equivalents be defined by the claims appended hereto.

What is claimed is:

1. An unmanned remote control inspection vehicle, comprising:

an airframe including at least one propulsion assembly;

a video camera allowing for pivotal movement;

a video transmitter;

a controller with flight avionics to control said at least one propulsion assembly;

a transceiver in communication with said controller and a remote control;

a landing assembly connected to said airframe, said landing assembly having at least one support structure for landing in a first orientation and at least one second support structure for landing in a second orientation;

a detaching mechanism to release the landing assembly from a surface in one of said first and second orientations.

2. The unmanned remote control inspection vehicle of claim **1**, said landing assembly having said at least one support structure being generally horizontal in orientation.

3. The unmanned remote control inspection vehicle of claim **1**, said landing assembly having said at least one second support structure being generally vertical in orientation.

4. The unmanned remote control inspection vehicle of claim **1**, said landing assembly including a landing frame having a first strut and a second strut.

5. The unmanned remote control inspection vehicle of claim **4**, said landing assembly including a third and a fourth strut.

6. The unmanned remote control inspection vehicle of claim **1** further comprising a retaining mechanism one of said at least one first and second support mechanism for landing in a vertical orientation.

7. The unmanned remote control inspection vehicle of claim **6**, said retaining mechanism being magnetic landing feet.

8. The unmanned remote control inspection vehicle of claim **6**, said magnetic feet being pivotable about a vertical axis.

9. The unmanned remote control inspection vehicle of claim **6**, said magnetic feet being movable to change width between said landing feet.

10. An unmanned remote control inspection vehicle, comprising:

an airframe including a plurality of propulsion assemblies;

a controller in communication with said plurality of propulsion assemblies;

a remote control in wireless communication with said controller to control flight of said vehicle;

a landing structure connected to said airframe, said landing structure allowing landing on a surface parallel to a gravity force;

said landing structure allowing landing on a surface perpendicular to a gravity force;

a retaining mechanism on said landing structure and a detachment mechanism;

a video camera onboard said vehicle for inspection.

11. The unmanned remote control inspection vehicle of claim **10**, said retaining mechanism being magnetic.

12. The unmanned remote control inspection vehicle of claim **10**, said detachment mechanism being a linear actuator.

13. The unmanned remote control inspection vehicle of claim **10**, said landing structure having at least one strut in vertical orientation and at least one strut in a horizontal direction.

14. The unmanned remote control inspection vehicle of claim **10** further comprising a receiver for electronic communication between said remote control and said controller.

15. The unmanned remote control inspection vehicle of claim **10**, said video camera mounted on a gimbal allowing at least one degree of pivot.

16. An unmanned remote control inspection vehicle, comprising:

an airframe having at least one propulsion assembly;

a controller in electrical communication with said at least one propulsion assembly;

a receiver in communication with said controller, said receiver in wireless communication with a remote control;

at least one camera for video inspection and non-line-of-flight of said vehicle;

a landing structure connected to said airframe, said landing structure having a first portion defining a first outer boundary of said vehicle along a first dimensional axis and a second portion defining a second outer boundary of said vehicle along a second dimensional axis.

17. The vehicle of claim **16** further comprising a rechargeable battery.

18. The vehicle of claim **16** wherein said propulsion assembly includes an electric motor.

19. The vehicle of claim **16**, said at least one camera being an inspection camera.

20. The vehicle of claim **16**, said at least one camera including a pilot camera.

21. A method of inspecting a boiler, comprising:

positioning a remote control unmanned aircraft adjacent an enclosed space within said boiler;

flying said aircraft within said enclosed space;

flying to a first position;

landing said aircraft on a vertical surface within said boiler;

scanning an area of said enclosed space with a video camera;

powering up a propulsion assembly;

detaching said vehicle from said vertical surface within said boiler;

flying said aircraft to a second position.

22. The method of claim **21** further comprising flying by line of sight.

23. The method of claim **21** further comprising flying by video from said video camera.

24. The method of claim **21** further comprising a sending an acoustic signal toward a wall of said enclosed space to locate said aircraft.

25. The method of claim **21** further wherein said vertical surface comprises one of a vertical sidewall or vertical steam piping with a magnet on a landing assembly.

26. The method of claim **21** further comprising recording video on said aircraft.

27. The method of claim **21** further comprising wirelessly transmitting a video signal from said camera to a control station.

28. The method of claim **27** further comprising recording a video signal at a control station.

29. The method of claim **27** further comprising viewing video in real-time at a control station.

30. A method of boiler inspection with an unmanned remote control aircraft, comprising:

establishing a control area for flying said aircraft;

flying said aircraft within said boiler;

transmitting video of said flight to said control area for guiding said aircraft;

guiding said aircraft to a generally vertical landing position;

landing said aircraft at said generally vertical landing position;

powering down at least one propulsion assembly;

scanning an area of said boiler with a camera;

recording video of said scanning;

detaching said aircraft from said generally vertical landing position;

flying to a second landing position; and,

landing at said second landing position.

31. The method of claim **30** further comprising powering up said at least one propulsion assembly.

32. The method of claim **30**, said recording occurring onboard said aircraft.

33. The method of claim **30**, said recording occurring at said control area.

34. The method of claim **30** further comprising powering up said at least one propulsion assembly.

35. The method of claim **30** further comprising scanning an area at said second landing area of said boiler.

36. The method of claim **30** further comprising actuating an actuator to perform said detaching.

37. The method of claim **30** further comprising depowering magnets to perform said detaching.

38. The method of claim **30** further comprising adjusting feet for said landing.

39. The method of claim **38** further comprising adjusting at least one of width, pivot about a vertical axis and pivot about a horizontal axis.

40. A method of inspecting an enclosed space with an unmanned remote control aircraft with at least one camera, comprising:

establishing a control area for flying said aircraft;

flying said aircraft to a first inspection area within said enclosed space;

capturing images of a condition of at least one of said first inspection area and said flight;

transmitting said images of a condition of at least one of said first inspection area and said flight to said control area;

recording said images at one of said aircraft and said control area.

41. The method of claim **40** further comprising:

flying said aircraft to a second inspection area within said enclosed;

transmitting second images of a condition of at least one condition of said second inspection area and said flight to said control area;

recording said second images at one of said aircraft and said control area.

42. The method of claim **40** further comprising hovering said aircraft at said first inspection area within said enclosed space.

43. The method of claim **40** further comprising landing said aircraft on a vertical landing area, said vertical landing area being one of at or adjacent to said first inspection area.

44. The method of claim **40** wherein said flying and said capturing occur with a single camera.

45. The method of claim **40** wherein said flying and capturing occur with separate cameras.

46. The method of claim **40** wherein said images are still images.

47. The method of claim **40** wherein said images are video images.

48. The method of claim **40** further comprising creating a report of at said first inspection area.

* * * * *