EXHIBIT
2038

IN THE UNITED STATES DISTRICT COURT
FOR THE DISTRICT OF DELAWARE

CEREBRUM SENSOR TECHNOLOGIES, INC. and TIRE STICKERS LLC,	)	
Plaintiffs,	)	
v.	)	C.A. No. 24-245 (JLH) (SRF)
REVVO TECHNOLOGIES, INC.,	)	
Defendant.	)	

JOINT CLAIM CONSTRUCTION CHART

Pursuant to Paragraph 8 of the Scheduling Order (D.I. 38), the parties hereby submit their Joint Claim Construction Chart (Ex. A) for claim construction proceedings for U.S. Patent No. 10,137,741 ("the '741 Patent"); U.S. Patent No. 11,124,027 ("the '027 Patent"); and U.S. Patent No. 11,835,421 ("the '421 Patent") (collectively, "the Asserted Patents" or "Patents-in-Suit").[1]

The Joint Claim Construction Chart identifies the disputed claim terms and the parties' proposed constructions of those terms and supporting intrinsic evidence. Citations to patent column and line numbers are in column:line format. Each citation to a figure incorporates by reference, as if fully set out herein, any associated description or discussion of the figure. Similarly,

[1] The Joint Claim Construction Chart at Exhibit A includes the terms for which the parties have met-and-conferred and identified for claim construction at this stage of the case. Exhibit B to this joint submission includes additional terms that Revvo had identified as being in dispute between the parties and subject to construction if necessary after Plaintiffs reduce their number of asserted claims from the presently asserted 50+ claims to 18 asserted claims pursuant to the case schedule. *See, e.g., O2 Micro Int'l Ltd. v. Beyond Innovation Tech. Co.*, 521 F.3d 1351, 1362 (Fed. Cir. 2008) ("When the parties present a fundamental dispute regarding the scope of a claim term, it is the court's duty to resolve it.").

each citation to a description or discussion of any figure incorporates by reference each figure described or discussed as if fully set out herein.

Each party reserves the right to rely on other portions of the intrinsic record, including to refute positions taken by the other party during the Markman proceedings.

The citation to any portion of the intrinsic record is not to be construed as an admission by that party that the cited portion defines the term. Moreover, the parties further agree that any party may argue that the cited portions are exemplary, and thus indicate that no special definition governs, and that the ordinary meaning should thus govern.

Additionally, each party reserves the right to assert that its proposed construction is supported by the ordinary meaning of the term, and to introduce extrinsic evidence to the extent the Court permits such evidence.

The following exhibits are attached:

Exhibit	**Description**
Exhibit A	Joint Claim Construction Chart (terms 1-13): Cerebrum's five proposed terms for construction: terms 4, 5, 6, 12, and 13;[2] Revvo's proposed terms for construction: terms 1-3, 7-11
Exhibit B	Revvo's reserved terms for construction chart[3]
Exhibit C	U.S. Patent No. 10,137,741 ("the '741 Patent")
Exhibit D	U.S. Patent No. 11,124,027 ("the '027 Patent")
Exhibit E	U.S. Patent No. 11,835,421 ("the '421 Patent")

[2] Cerebrum reserves all rights with regard to Revvo's list of claim terms exceeding five claim terms, despite Cerebrum's requests that each side limit their lists to five claim terms each.

[3] Cerebrum has proposed plain and ordinary meaning claim constructions for the terms in Exhibi B that the parties discussed on January 21, 2025 pursuant to the Court's Order (D.I. 82). Cerebrum reserves the right to propose plain and ordinary meaning claim constructions for those remaining terms reserved by Revvo to the extent such a submission becomes necessary. Revvo reserves all rights for Cerebrum's decision to withhold its claim construction positions for these terms.

Exhibit	Description
Exhibit F	Response to Non-Final Office Action dated July 5, 2018 ('741 Patent)
Exhibit G	U.S. Patent No. 5,300,164 (DeTrano) (cited in Exhibit F and Exhibit H)[4]
Exhibit H	Response to Non-Final Office Action dated March 1, 2021 ('027 Patent)
Exhibit I	Response to Non-Final Office Action dated May 23, 2023 ('421 Patent)
Exhibit J	U.S. Publication 2019/0184773 (Saito) (cited in Exhibit I)[2]

MORRIS, NICHOLS, ARSHT & TUNNELL LLP

/s/ Lucinda C. Cucuzzella

Karen Jacobs (#2881)
Lucinda C. Cucuzzella (#3491)
1201 North Market Street
P.O. Box 1347
Wilmington, DE 19899
(302) 658-9200
kjacobs@morrisnichols.com
ccucuzzella@morrisnichols.com

Attorneys for Plaintiffs Cerebrum Sensor Technologies, Inc. and Tire Stickers LLC

RICHARDS, LAYTON & FINGER, P.A.

/s/ Sara M. Metzler

Kelly E. Farnan (#4395)
Sara M. Metzler (#6509)
One Rodney Square
920 North King Street
Wilmington, DE 19801
(302) 651-7700
farnan@rlf.com
metzler@rlf.com

Attorneys for Defendant Revvo Technologies, Inc.

[4] Revvo objects to Plaintiffs inclusion of third-party patents as attachments to this joint submission and further reserves the right to submit its own extrinsic evidence in support of its proposed claim construction positions.

OF COUNSEL:

Christopher D. Bright
SNELL & WILMER L.L.P.
Plaza Tower
600 Anton Boulevard, Suite 1400
Costa Mesa, CA 92626-7689
(714) 427-7000

Christopher Franich
SNELL & WILMER L.L.P.
Executive Center Del Mar
12230 El Camino Real, Suite 300
San Diego, CA 92130
(858) 343-5020

Morgan R. Povinelli
SNELL & WILMER L.L.P.
2001 K Street NW
Suite 425 North
Washington, DC 20006
(202) 925-5961

January 22, 2025

OF COUNSEL:

Reuben H. Chen
COOLEY LLP
3175 Hanover Street
Palo Alto, CA 94304-1130
(650) 843-5000

Adam M. Pivovar
Rachel L. Preston
COOLEY LLP
1299 Pennsylvania Avenue NW, Suite 700
Washington, DC 20004-2400
(202) 842-7800

EXHIBIT A

Cerebrum v. Revvo, Case No. 1:24-cv-00245-JLH-SRF (D. Del.); Joint Claim Construction Chart (pursuant to D.I. 38), Exhibit A

Terms for Construction from ’741 patent and ’027 patent family (assigned to Plaintiff Tire Stickers LLC; exclusively licensed to Cerebrum Sensor Technologies, Inc.)

Term No.	Term	Plaintiffs’ Proposed Construction[1]	Plaintiffs’ Intrinsic Evidence[2]	Defendant’s Proposed Construction	Defendant’s Intrinsic Evidence[3]
1	“layer” ’741 Patent – claims 1-4, 6, 9-11, 15-17, and 19-20 ’027 Patent – claims 1-4, 6, 9-11, 15 and 18-22	plain and ordinary meaning; no construction necessary to the extent construed: at least one material disposed over	See col. 1:67-2:7; 2:18-21; 2:56-62; 3:33-40; 4:1-3; 4:13-16; 4:36-41; 4:54-60; 5:53-64; 10:56-57; claim 6; claim 15; claim 6 (’027 patent)	a single thickness of separate and distinct material with a sheetlike structure	1:64-67; 1:67-2:7; 7:51-58; 8:37-42; Figs. 2-7; Figs. 1, 8; *passim*
2	“(an) outer layer” ’027 Patent – claims 1, 2, 4, 6, 11, 15, 19, 20, 21, 22, 23	plain and ordinary meaning; no construction necessary to the extent construed: at least one layer that is outermost	See term #1; See col. 2:58-64; 2:65-3:6; 3:7-15; 3:16-25; 3:26-34; 4:13-16; 4:56-62; 5:55-66; claim 2; claim 6	Indefinite	’027 Patent File History: Preliminary Amendment (Feb. 19, 2019) ’027 Patent File History: Response to Non-Final Office Action (March 1, 2021)

[1] Cerebrum’s five proposed terms for construction: terms 4, 5, 6, 12, and 13. Revvo’s proposed terms for construction are terms 1-3 and 7-11.

[2] All of Cerebrum’s citations to the specifications include the described figures. Where a claim term is in both the ’741 patent and the ’027 patent, the citations are to the ’741 patent specification.

[3] All of Revvo’s citations are to the specification of the ’741 patent, which is the parent of the asserted continuation’027 patent and shares the same specification disclosures.

Term No.	Term	Plaintiffs' Proposed Construction[1]	Plaintiffs' Intrinsic Evidence[2]	Defendant's Proposed Construction	Defendant's Intrinsic Evidence[3]
3	"(an) intermediate layer" '741 Patent – claims 1, 2, 11 and 19	plain and ordinary meaning; no construction necessary to the extent construed: at least one layer between other materials	See term #1; See col. 2:16-18; 2:56-62; 6:11-22; 6:31-37; 6:45-55. ; 6:38-45; 9:4-7	a "layer" or "layers" interposed between other "layers" Indefinite	Abstract; 1:67-2:7; 1:67-2:7; 2:16-18; 8:50-67; 9:8-13; 9:58-66; 10:27-35; Figs. 2-7; *passim*
4	"vulcanized"/ "vulcanized to[gether]" '741 Patent – claims 1, 11, and 19	cross-linked to[gether], whether chemically, by heat, by pressure, or otherwise	See col. 1:58-61; 6:26-30; 6:57-60; 7:45-50; 8:43-49; 9:33-39; 10:43-49; 15:6-9 File history, e.g.: Response to Non-Final Office Action at 9, dated July 5, 2018; U.S. Patent No. 5,300,164 (DeTrano), e.g., at Table I, Table II, and Table III	"vulcanized": rubber material(s) that has(have) been cured by a heat and/or chemical vulcanization process that forms a network of permanent and irreversible crosslinks that is essentially insoluble in any solvent and is no longer processable "vulcanized together/to": two rubber materials that have been cured [together/to each other] by a heat and/or chemical vulcanization process	Abstract; 1:25-29; 2:8-10; 2:35-39; 2:56-62; 3:5-13; 3:24-32; 4:19-23; 5:36-45; 6:26-30; 6:57-64; 7:3-13; 7:19-29; 14:55-63 *passim*

Term No.	Term	Plaintiffs' Proposed Construction[1]	Plaintiffs' Intrinsic Evidence[2]	Defendant's Proposed Construction	Defendant's Intrinsic Evidence[3]
				that forms a network of permanent and irreversible crosslinks between them that is essentially insoluble in any solvent and no longer processable Otherwise, indefinite	
5	"barrier material composition" / "material composition that acts as a barrier" '027 Patent – claims 1, 11, 15, and 19	material composition that has properties of shock absorbance, elastomeric expansion and/or contraction	See col. 6:19-28; 6:33-39; 8:62-9:3; 9:9-16 File history, e.g.: Response to Non-Final Office Action at 6, dated March 1, 2021	a material composition that blocks or is intended to block passage of discoloring chemicals, particularly antioxidants, within vulcanized rubber articles such as vulcanized rubber tires	5:64-6:4; 6:31-56; 7:51-58; 8:37-42
6	"cavity" '741 Patent – claims 7, 8, and 9 '027 Patent – claims 7, 8, 9, 16, 17, 18, 19, and 20	a space for accommodating an element or object	See col. 11:23-30; 11:38-45; 11:48-64; 11:65-12:8; 13:8-24; Fig. 7	a hole or hollow space	2:20-22; 3:41-51; 11:23-12:25; Fig. 7
7	"direct contact" '741 Patent – claims 1 and 11	plain and ordinary meaning; no construction necessary	See term #4; See col. 2:28-30; 6:11-15; 7:45-49; 6:9-11;	nothing interposed between two surfaces that are touching each other	6:9-11; 8:50-67; Fig. 2; Fig. 4A; Figs 2-7 '741 Patent File

Term No.	Term	Plaintiffs' Proposed Construction[1]	Plaintiffs' Intrinsic Evidence[2]	Defendant's Proposed Construction	Defendant's Intrinsic Evidence[3]
		to the extent construed: to the extent construed: bonded to	9:8-19; 13:56-62; 14:39-46		History: Response to Non-Final Office Action (July 5, 2018)
8	"before attachment with the vulcanized rubber article"/"before attachment to the vulcanized rubber article" '741 Patent – claims 1, 11 and 19	plain and ordinary meaning; no construction necessary Claims 1 and 19 do not recite this term as a method step	See term #4; See col. 8:43-49; 9:33-39	Claim 1 and 19 recite this term as a method step within apparatus claims, thereby rendering the claims indefinite	8:43-49 '741 Patent File History: Response to Non-Final Office Action (July 5, 2018)

Terms for Construction from ’421 patent (assigned to Plaintiff Cerebrum Sensor Technologies, Inc.)

Term No.	Term	Plaintiffs’ Proposed Construction	Plaintiffs’ Intrinsic Evidence	Defendant’s Proposed Construction	Defendant’s Intrinsic Evidence[4]
9	“(a) housing” ’421 Patent – claims 1, 28 and 41	plain and ordinary meaning; no construction necessary to the extent construed: a protective cover	See col. 4:5-13; 6:15-22; 9:16-18; 10:55-59	a protective casing that surrounds the sensor device and constructed to provide an “internal cavity” that is configured with surface features that mechanically fix and retain the placement position of the sensor device and does not use or require the use of any coating or filling agents or materials to fix and retain the placement position of the electrical sensor device therein	12:41-60; 13:34-14:11; 4:4-9; 6:49-55; 10:33-46; 11:34-49; 11:50-12:4: 12:5-40; 12:61-13:9; Figs. 3, 5-10; *passim* ’421 Patent File History: Response to Non-Final Office Action (May 23, 2023)
10	“internal cavity” ’421 Patent – claims 1, 28 and 41	plain and ordinary meaning; no construction necessary to the extent construed: an open	See term #9 and term #13; See col. 10:17-21; 14:2-11; Fig. 10; claim 10	Indefinite If construed: a hollow or “open space” surrounded by and inside (but not	Abstract; 4:4-13; 4:14-33; 10:33-46; 10:47-59; 11:34-49; 11:50-12:4; 12:5-40; 12:41-60; 12:61-13:9; 13:10-14; 13:46-14:11;

[4] All of Revvo’s citations are to the specification of the ’741 patent, which is the parent of the asserted continuation’027 patent and shares the same specification disclosures.

Term No.	Term	Plaintiffs' Proposed Construction	Plaintiffs' Intrinsic Evidence	Defendant's Proposed Construction	Defendant's Intrinsic Evidence[4]
		space inside of the housing		included as part of) the housing	14:12-40; 14:41-54; Figs. 1-3, 5-10; *passim*
11	"enclosed/enclosed within the housing" '421 Patent – claim 1	plain and ordinary meaning; no construction necessary to the extent construed: surrounded within the housing	See col. 4:5-13; 4:14-33; 6:15-19; 6:48-55; 10:13-21; 10:47-51; 10:55-59; 11:60-63; 12:61-66; 13:10-21; claim 3; claim 40	"enclosed": surrounded on all sides "enclosed within the housing": surrounded on all sides by the "housing"	4:4-14; 10:47-59;
12	"unfilled open space"/"open space" '421 Patent – claims 1, 31	space without filling agents or materials	See col. 12:41-46; 13:60-64; 14:41-54; Fig. 10 File history, e.g.: Response to Non-Final Office Action at 13, dated May 23, 2023; U.S. publication 2019/0184773 (Saito), e.g., Fig. 3; [0045]	"unfilled open space": Indefinite "open space" - plain and ordinary meaning; no construction necessary; to the extent construed: an empty space	4:14-33; 14:12-54; *see also* "internal cavity" and "housing," above '421 Patent File History: Response to Non-Final Office Action (May 23, 2023)
13	"surface feature[s]" '421 Patent – claims 5, 28, and 43	structure[s] on or of a surface	See col. 4:20-25; 10:21-32; 10:33-45; 11:34-49; 11:53-59; 12:14-22; 12:25-31; 13:52-56 File history, e.g.: Response to Non-Final Office Action at	feature(s) of a surface	4:14-33; 11:34-49; 11:50-12:4; 12:5-40; 13:46-14:11

Term No.	Term	Plaintiffs' Proposed Construction	Plaintiffs' Intrinsic Evidence	Defendant's Proposed Construction	Defendant's Intrinsic Evidence[4]
			13, dated May 23, 2023; U.S. publication 2019/0184773 (Saito), e.g., Fig. 2; [0045]		

EXHIBIT B

Revvo's First Reserved Disputed Terms from the '741 Patent and '027 Patent Family (assigned to Tire Stickers; exclusively licensed to Cerebrum)

Term No.	Term	Plaintiffs' Proposed Construction[1]	Plaintiffs' Intrinsic Evidence[2]	Defendant's Proposed Construction	Defendant's Intrinsic Evidence[3]
R1	"display layer(s)"/"one or more display layers" '741 Patent – claims 1, 11 and 19	plain and ordinary meaning; no construction necessary to the extent construed: at least one layer that is configured to provide a display indicia	See Exhibit A, term # 1; See col. 4:54-57; 8:1-4	one or more "layers" that include at least one "layer" that has a color and/or pattern and/or shape and/or texture that is visible to an observer Indefinite	Abstract; 1:67-2:7; 1:67-2:7; 2:16-18; 4:60-64; ; 5:59-64; 8:50-67; 9:8-13; 9:58-66; 10:27-35; Figs. 2-7; *passim*
R2	"(an) adhesive layer" '741 Patent – claims 1, 11 and 19	plain and ordinary meaning; no construction necessary to the extent construed: at least one layer that bonds to,	See Exhibit A, term #1; See col. 2:8-9; 2:25-29; 2:56-62; 7:38-41; claim 11	a layer of an adhesive material (e.g., thermoplastic and thermoset adhesives, heat vulcanizing cements common in retread applications,	Abstract; 1:67-2:7; 1:67-2:7; 2:16-18; 7:3-13; 7:19-29; 8:50-67; 9:8-13; 9:58-66; 10:27-35; 14:30-46; Figs. 2-7; *passim*

[1] Cerebrum has proposed plain and ordinary meaning claim constructions for the terms in Exhibit B that the parties discussed on January 21, 2025 pursuant to the Court's Order (D.I. 82). Cerebrum reserves the right to propose plain and ordinary meaning claim constructions for those remaining terms reserved by Revvo to the extent such a submission becomes necessary. Revvo reserves all rights for Cerebrum's decision to withhold its claim construction positions for these terms.

[2] All of Cerebrum's citations to the specifications include the described figures. Where a claim term is in both the '741 patent and the '027 patent, the citations are to the '741 patent specification.

[3] All of Revvo's citations are to the specification of the '741 patent, which is the parent of the asserted continuation'027 patent and shares the same specification disclosures.

Term No.	Term	Plaintiffs' Proposed Construction[1]	Plaintiffs' Intrinsic Evidence[2]	Defendant's Proposed Construction	Defendant's Intrinsic Evidence[3]
		vulcanizes to, or otherwise adheres to		water-based or solvent based polymer polyurethane based adhesives, and combinations thereof or chemical cements common in retread applications, cyanoacrylate, epoxies, rubber-based acrylic pressure sensitive adhesives and combinations thereof) Indefinite	
R3	"display assembly/assembly" '741 Patent – claims 1 and 11 '027 Patent – claims 1, 11 and 19	Preambles not limiting plain and ordinary meaning; no construction necessary to the extent "display assembly" is construed: an assembly configured to provide a display indicia to the extent	See col. 1:60-2:4; 2:35-43; 4:1-3; 4:54-60; 5:53-64	Preambles reciting these terms are limiting. "display assembly": a layered composite with sheetlike structure for attaching to a vulcanized rubber article that has a color and/or pattern, and or shape, and/or texture visible to an	Abstract; 1:15-16; 1:43-53; 1:60-2:7; 1:67-2:7; 2:16-18; 2:23-43; 2:53-3:55; 3:59-4:16; 4:60-64; 5:18-24; 5:59-64; 8:1-21; 8:50-67; 9:8-13; 9:58-66; 10:27-35; Figs. 1-8; *passim*

Term No.	Term	Plaintiffs' Proposed Construction[1]	Plaintiffs' Intrinsic Evidence[2]	Defendant's Proposed Construction	Defendant's Intrinsic Evidence[3]
		"assembly" is construed: assembly		observer; otherwise, indefinite "assembly": a layered composite with sheetlike structure for attaching to a vulcanized rubber article; otherwise, indefinite	
R4	"different from" '741 Patent – claims 1, 11 and 19	plain and ordinary meaning; no construction necessary to the extent construed: not identical in at least one characteristic; any difference	See col. 1:67-2:7; 6:37-38; 4:57-58; 6:4-8; 6:49-52	not identical to each other	Abstract; 1:60-2:7
R5	"display indicia"/"(a) visual feature" '741 Patent – claims 1, 11 and 20	plain and ordinary meaning; no construction necessary to the extent construed: at least one visual display or a feature that is visually or	See col. 1:60-63; 2:11-16; 4:36-41; 4:54-60; 5:53-64; 8:1-4; 12:39-44	Any visible color and/or pattern, and/or shape, and/or texture	4:60-5:11; 5:18-24; 5:59-64; 8:1-21

Term No.	Term	Plaintiffs' Proposed Construction[1]	Plaintiffs' Intrinsic Evidence[2]	Defendant's Proposed Construction	Defendant's Intrinsic Evidence[3]
		otherwise detectable			
R6	"adhesive material" '741 Patent – claim 11	plain and ordinary meaning; no construction necessary to the extent construed: material capable of forming the desired chemical bond or being vulcanized thereto	See col. 2:8-9; 2:25-29; 2:56-62; 7:19-33; 7:38-41; 14:14-19; 14:30-46	A material that itself activates and forms chemical bonds by being heat-activated (e.g., thermoplastic and thermoset adhesives, heat vulcanizing cements common in retread applications, water-based or solvent based polymer polyurethane based adhesives, and combinations thereof) or chemically-activated (e.g., chemical cements common in retread applications, cyanoacrylate, epoxies, rubber-based acrylic pressure sensitive adhesives and combinations thereof)	7:3-13; 7:19-29; 14:30-46
RR7	"the intermediate layer is in direct contact with at least one or more of the display	plain and ordinary meaning; no construction necessary	See Exhibit A, term #1	the intermediate layer is touching the at least one or more of the display layers with no	*See* "direct contact" above

Term No.	Term	Plaintiffs' Proposed Construction[1]	Plaintiffs' Intrinsic Evidence[2]	Defendant's Proposed Construction	Defendant's Intrinsic Evidence[3]
	layers"/"(an) adhesive layer in direct contact with an underside surface of the intermediate layer" '741 Patent – claims 1 and 11			other layer interposed between them/ the adhesive layer is touching the underside surface of the intermediate layer with no other layer interposed between them	
RR8	"the one or more display layers and the intermediate layer are vulcanized together"/" the intermediate layer is vulcanized to at least one of the one or more display layers" '741 Patent – claims 1, 11 and 19	plain and ordinary meaning; no construction necessary	See Exhibit A, term #4 See also col. 6:26-30; 7:45-51; 8:43-49	the one or more display layers and the intermediate layer have been cured together by a heat and/or chemical vulcanization process that forms a network of permanent and irreversible crosslinks between them that is essentially insoluble in any solvent and no longer processable; otherwise, indefinite	*See* "vulcanized"/ "vulcanized together"
RR9	"a material capable of [forming a chemical bond/chemically bonding] with a surface of the vulcanized rubber	plain and ordinary meaning; no construction necessary	See col. 6:57-67; 7:19-29	An adhesive material that is itself capable of forming a chemical bond or being vulcanized to the surface of the	7:3-13; 7:19-29; 14:30-46 '741 Patent File History: Response to Non-Final Office Action (July 5, 2018)

Term No.	Term	Plaintiffs' Proposed Construction[1]	Plaintiffs' Intrinsic Evidence[2]	Defendant's Proposed Construction	Defendant's Intrinsic Evidence[3]
	article [at ambient temperature conditions]" '741 Patent – claims 1 and 4 '027 Patent – claim 1			vulcanized rubber article under elevated temperature conditions (e.g., heat-activated adhesives such as thermoplastic and thermoset adhesives, heat vulcanizing cements common in retread applications, water-based or solvent based polymer polyurethane based adhesives, and combinations thereof) or at ambient temperature conditions without being heat activated (e.g., chemical cements common in retread applications, cyanoacrylate, epoxies, rubber-based acrylic pressure sensitive adhesives and combinations thereof) [at ambient	

Term No.	Term	Plaintiffs' Proposed Construction[1]	Plaintiffs' Intrinsic Evidence[2]	Defendant's Proposed Construction	Defendant's Intrinsic Evidence[3]
				temperature: conditions]: an adhesive material that is itself capable of forming the desired chemical bond or being vulcanized to a surface of the vulcanized rubber article without being heat activated (e.g., chemical cements common in retread applications, cyanoacrylate, epoxies, rubber-based acrylic pressure sensitive adhesives and combinations thereof)	
RR10	"an adhesive layer forming a chemical bond . . . wherein the chemical bond is formed at ambient temperature conditions" '741 Patent – claim 19	plain and ordinary meaning; no construction necessary	See Exhibit B, term #R2	a layer of material that itself activates and forms a chemical bond with or is vulcanized to a surface of the vulcanized rubber article without being heat activated (e.g., chemical cements common in retread	*See* "adhesive layer," above

Term No.	Term	Plaintiffs' Proposed Construction[1]	Plaintiffs' Intrinsic Evidence[2]	Defendant's Proposed Construction	Defendant's Intrinsic Evidence[3]
				applications, cyanoacrylate, epoxies, rubber-based acrylic pressure sensitive adhesives and combinations thereof)	
RR11	"adhered"/"adhered to an interface surface of the outer layer" '027 Patent – claims 1, 11, 15 and 19	plain and ordinary meaning; no construction necessary	See col. 3:7-25	"adhered" - no construction necessary "adhered to an interface surface of the outer layer": indefinite	*See* "outer layer," above
RR12	"at least a portion"/"at least a portion of the outer layer adjacent the interface surface" '027 Patent – claims 1 and 15	plain and ordinary meaning; no construction necessary	See Exhibit A, term #2	"at least a portion" means a part or all "at least a portion of the outer layer adjacent the interface surface" means a part or all of the outer layer adjacent the interface surface; indefinite	6:9-17; 7:59-63
RR13	"bonds"/"bonding" '741 Patent – claims 1, 11 and 19 '027 Patent – claims 1, 11 and 19	plain and ordinary meaning; no construction necessary	See col. 2:10-12; 2:25-32; 6:59-62	"chemically bonds"/"chemical bonding"	7:3-13; 7:19-29; 14:30-46

Revvo's Reserved Disputed Terms from the '421 Patent (assigned to Cerebrum)

Term No.	Term	Plaintiffs' Proposed Construction	Plaintiffs' Intrinsic Evidence	Defendant's Proposed Construction	Defendant's Intrinsic Evidence
R14	"fixed/having a fixed placement" '421 Patent – claim 28	plain and ordinary meaning; no construction necessary to the extent construed: not displaceable in at least one direction	See col. 6:49-55; 10:55-59; 12:14-19; 12:25-29; 12:41-45	Securely fastened in place and not moving or able to be moved when secured / having a securely fastened placement and not moving or able to be moved when secured	6:49-55; 10:55-59; 12:31-40; 12:41-45; 12:61-13:9; 13:51-14:1
R15	"the housing includes an outer structure that defines the internal cavity" '421 Patent – claim 41	plain and ordinary meaning; no construction necessary to the extent construed: the space inside of the housing structure is the internal cavity	See col. 4:5-13; 6:15-19; 10:13-21; Fig. 10; claim 10	Indefinite	4:14-33; 10:13-32; 14:12-54; *see also* "internal cavity" and "housing," above
RR16	"(a) wall structure"/"the housing comprises a wall structure" '421 Patent – claim 3, 4, and 8	plain and ordinary meaning; no construction necessary	See col. 4:5-13; 6:15-19; 10:60-65	a structure resembling a wall/the "housing" includes a structure resembling a wall	4:7-13; 4:17-20; 6:15-22
RR17	"an element attached	plain and ordinary	See col. 22:49-55;	Any part that is	Abstract; 1:14-21;

Term No.	Term	Plaintiffs' Proposed Construction	Plaintiffs' Intrinsic Evidence	Defendant's Proposed Construction	Defendant's Intrinsic Evidence
	with the tire that rotates with the tire" '421 Patent – claim 24	meaning; no construction necessary	23:1-5	attached with and rotates with the tire	3:65-4:1; *passim*
RR18	"a housing comprising . . . an internal cavity that is enclosed within the housing" '421 Patent – claim 1	plain and ordinary meaning; no construction necessary	See Exhibit A, term ##9-11	a protective casing that surrounds and defines a hollow space inside the casing that has been constructed with surface features that mechanically fix and retain the placement position of the sensor device and does not use or require the use of any coating or filling agents or materials to fix and retain the placement position of the electrical sensor device therein Indefinite	*See* "housing," "internal cavity," and "enclosed within the housing," above
RR19	"an electrical sensor device that is disposed within the internal cavity and attached therein to prevent movement of the	plain and ordinary meaning; no construction necessary	See col. 4:14-33; 9:16-19	an electrical sensor device disposed within the "internal cavity" and connected therein by surface features that prevent	*See* "housing," "internal cavity," above;12:41-60; 13:46-14:11; 4:4-9; 6:49-55; 10:33-46; 11:34-49; 11:50-12:4:

Term No.	Term	Plaintiffs' Proposed Construction	Plaintiffs' Intrinsic Evidence	Defendant's Proposed Construction	Defendant's Intrinsic Evidence
	device within the internal cavity" '421 Patent – claim 1			movement of the sensor device within the internal cavity and does not use or require the use of any coating or filling agents or materials to fix and retain the placement position of the electrical sensor device therein	12:5-40; 12:61-13:9; Figs. 3, 5-10; *passim*
RR20	"one or more surface features within the cavity that contact the electrical sensor device to retain its position therein"/"(wherein) the electrical sensor device is attached within the internal cavity by one or more surface features within the cavity that contact the electrical sensor device to retain its position therein"/"the electrical sensor device is attached in place within the	plain and ordinary meaning; no construction necessary	See Exhibit A, term #13	the electrical sensor device is attached within the internal cavity to one or more surface features within the cavity that contact the electrical sensor device to retain its position therein and does not use or require the use of any coating or filling agents or materials to fix and retain the placement position of the electrical sensor device therein / the electrical sensor device is attached in	*See* "housing," "internal cavity," above;12:41-60; 13:46-14:11; 4:4-9; 6:49-55; 10:33-46; 11:34-49; 11:50-12:4: 12:5-40; 12:61-13:9; Figs. 3, 5-10; *passim*

Term No.	Term	Plaintiffs' Proposed Construction	Plaintiffs' Intrinsic Evidence	Defendant's Proposed Construction	Defendant's Intrinsic Evidence
	internal cavity by contact between the electrical sensor device and one or more surface features in the internal cavity" '421 Patent – claims 5, 28 and 43			place within the internal cavity by contact between the electrical sensor device and one or more surface features in the internal cavity and does not use or require the use of any coating or filling agents or materials to fix and retain the placement position of the electrical sensor device therein	
RR21	"(wherein) the retaining member has an outside surface configured for attachment (to rotate with the object)" '421 Patent – claims 1 and 28	plain and ordinary meaning; no construction necessary	See col. 6:23-48; 9:16-37	*See* "retaining member," above (wherein) the "retaining member" has an outside surface that connects it to the object that rotates	*See* "retaining member," above
RR22	"installing"/"installing an electrical sensor device within an internal cavity of a housing"	plain and ordinary meaning; no construction necessary	See col. 4:20-25; 6:49-55	The step of installing is not completed until the electrical sensor device is mechanically fixed and retained in place within the	6:49-55; *see also* "internal cavity" and "housing," above

Term No.	Term	Plaintiffs' Proposed Construction	Plaintiffs' Intrinsic Evidence	Defendant's Proposed Construction	Defendant's Intrinsic Evidence
	'421 Patent – claim 41			"internal cavity" of the "housing" otherwise, indefinite	
RR23	"display feature"/"a display feature that is positioned on the housing" '421 Patent – claim 50	plain and ordinary meaning; no construction necessary	See col. 6:19-22; 9:38-45	a feature that is viewable by a user when the "housing" is attached to the "retaining member"/a feature on the "housing" that is viewable to a user when the "housing" is attached with the "retaining member"	6:19-22; 7:4-6; 9:38-56; 9:57-64; 9:65-10:12
RR24	"the housing is positioned relative to the retaining member according to a display feature that is positioned on the housing" '421 Patent – claim 50	plain and ordinary meaning; no construction necessary	See Exhibit B, term #RR15 See also col. 10:3-9	the housing is positioned relative to the retaining member according to a feature on the "housing" that is viewable to a user	*See* "display feature" above
RR25	"an unfilled open space above or below the electrical sensor device"/"(wherein) the internal cavity comprises an unfilled	plain and ordinary meaning; no construction necessary	See Exhibit A, term #12	Indefinite	4:14-33; 14:12-54; *see also* "internal cavity" and "housing," above '421 Patent File History: Response to

Term No.	Term	Plaintiffs' Proposed Construction	Plaintiffs' Intrinsic Evidence	Defendant's Proposed Construction	Defendant's Intrinsic Evidence
	open space above or below the electrical sensor device in the housing" '421 Patent – claim 1				Non-Final Office Action (May 23, 2023)

Exhibit C

US010137741B2

(12) **United States Patent**
Ferry et al.

(10) **Patent No.: US 10,137,741 B2**
(45) **Date of Patent: Nov. 27, 2018**

(54) **DISPLAY ASSEMBLIES AND METHODS FOR APPLYING THE SAME TO VULCANIZED RUBBER ARTICLES**

(71) Applicants: **Keith George Ferry**, Studio City, CA (US); **Jason Michael Busch**, Studio City, CA (US)

(72) Inventors: **Keith George Ferry**, Studio City, CA (US); **Jason Michael Busch**, Studio City, CA (US)

(*) Notice: Subject to any disclaimer, the term of this patent is extended or adjusted under 35 U.S.C. 154(b) by 283 days.

(21) Appl. No.: **15/139,272**

(22) Filed: **Apr. 26, 2016**

(65) **Prior Publication Data**

US 2017/0001480 A1 Jan. 5, 2017

Related U.S. Application Data

(60) Provisional application No. 62/153,441, filed on Apr. 27, 2016.

(51) **Int. Cl.**

B60C 13/00	(2006.01)
B29C 65/52	(2006.01)
B29C 65/00	(2006.01)
B32B 7/12	(2006.01)
B32B 25/04	(2006.01)
B29D 30/72	(2006.01)
B44C 1/16	(2006.01)
B29L 30/00	(2006.01)

(52) **U.S. Cl.**

CPC ***B60C 13/001*** (2013.01); ***B29C 65/52*** (2013.01); ***B29C 66/02245*** (2013.01); ***B29C 66/5326*** (2013.01); ***B29D 30/72*** (2013.01); ***B32B 7/12*** (2013.01); ***B32B 25/042*** (2013.01); ***B44C 1/162*** (2013.01); *B29D 2030/728* (2013.01); *B29L 2030/00* (2013.01)

(58) **Field of Classification Search**

CPC B60C 13/001; B32B 7/12; B29D 2030/728
USPC 428/914; 427/148; 156/116, 240
See application file for complete search history.

(56) **References Cited**

U.S. PATENT DOCUMENTS

4,461,795	A	7/1984	Ogawa
5,198,301	A	3/1993	Hager et al.
5,300,164	A	4/1994	DeTrano et al.
5,508,084	A	4/1996	Reeves et al.
6,030,676	A	2/2000	Cottin et al.
6,080,465	A	6/2000	Boissonnet et al.

(Continued)

OTHER PUBLICATIONS

PCT; International Search Report and Written Opinion dated Jul. 27, 2016 in Application No. PCT/US2016/029605.

Primary Examiner — Fred M Teskin
(74) *Attorney, Agent, or Firm* — Snell & Wilmer L.L.P.

(57) **ABSTRACT**

Display assemblies as disclosed herein are configured for attachment with a vulcanized rubber article and are provided in the form of different material layers. Display assemblies generally comprise one or more display layers of elastomeric material configured to provide a desired display indicia, an intermediate layer formed from an elastomeric material different from that of the one or more display layers, and an adhesive layer wherein the intermediate layer is interposed between the adhesive layer and the one or more display layers. The one more display layers may be configured to act together or separately to provide a desired display indicia to provide a desired visual display or feature on the surface of the vulcanized rubber article, which may be a sidewall surface of a tire.

20 Claims, 8 Drawing Sheets

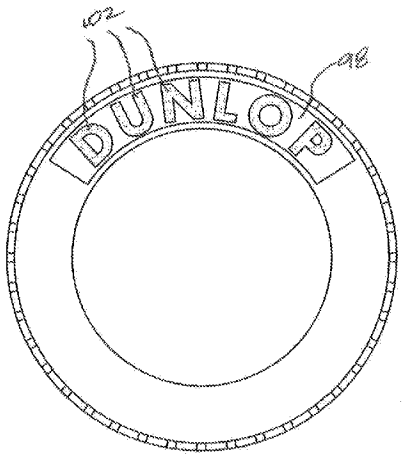

(56) **References Cited**

U.S. PATENT DOCUMENTS

6,235,376	B1	5/2001	Miyazaki et al.
6,391,134	B1	5/2002	Lipovac
7,387,144	B2	6/2008	Byrne
8,834,974	B1	9/2014	Ferry et al.
2005/0059308	A1	3/2005	Parsons
2010/0092716	A1	4/2010	Spychalsky

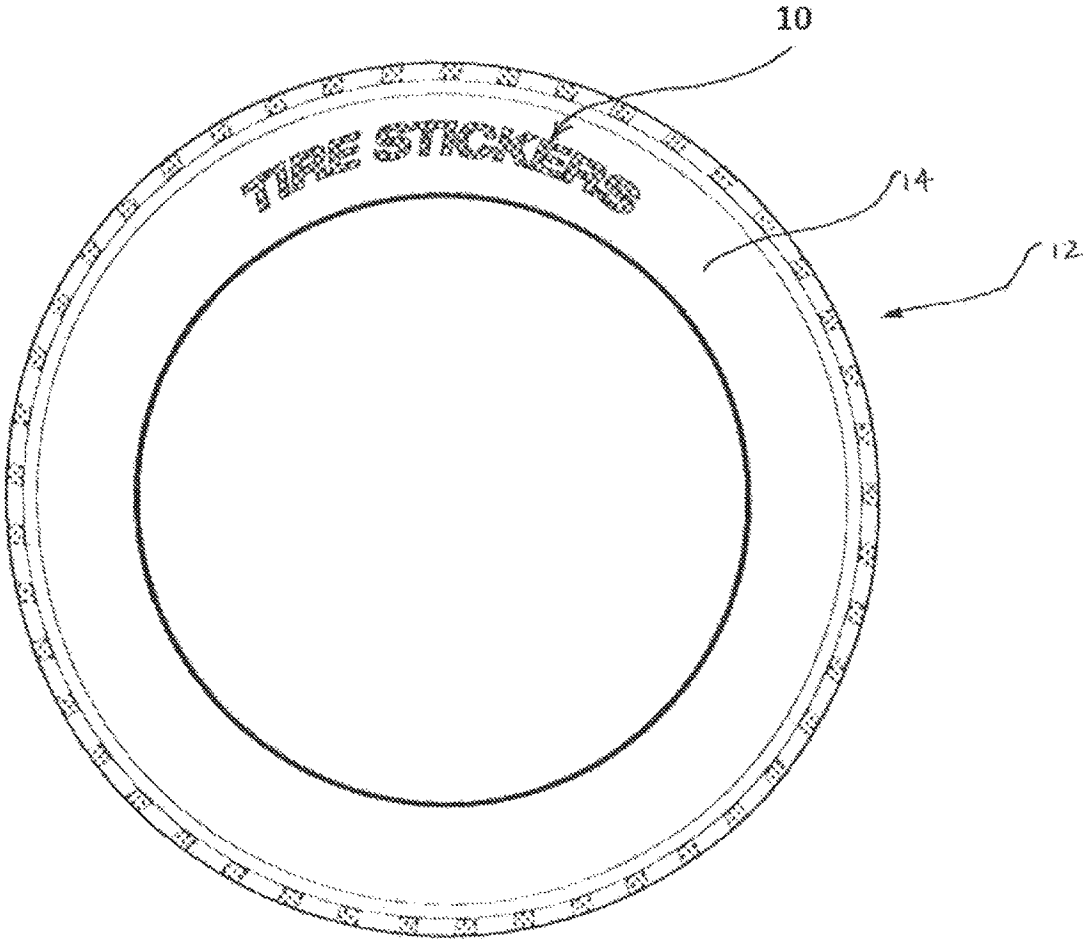

FIG. 1

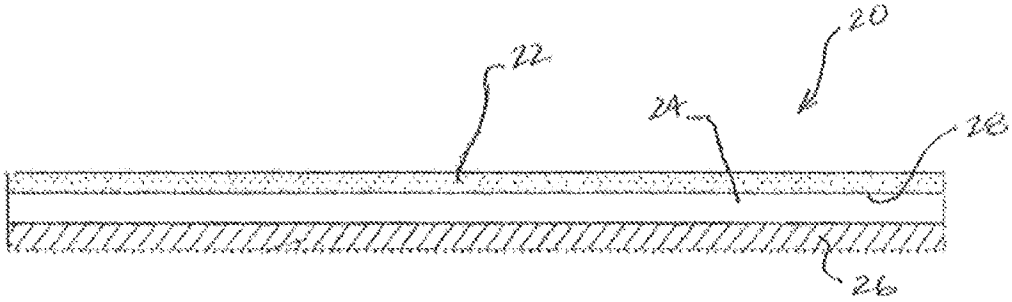

FIG. 2

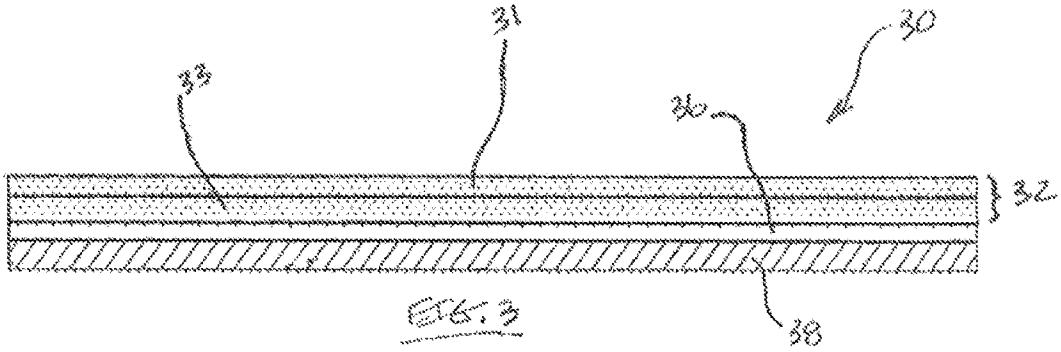

FIG. 3

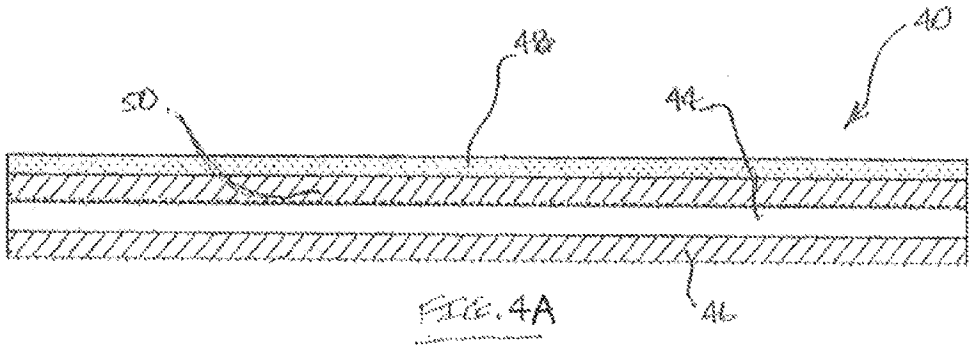

FIG. 4A

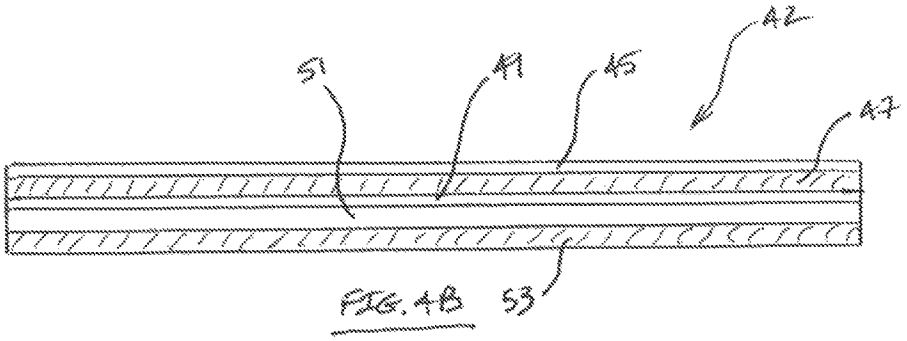

FIG. 4B

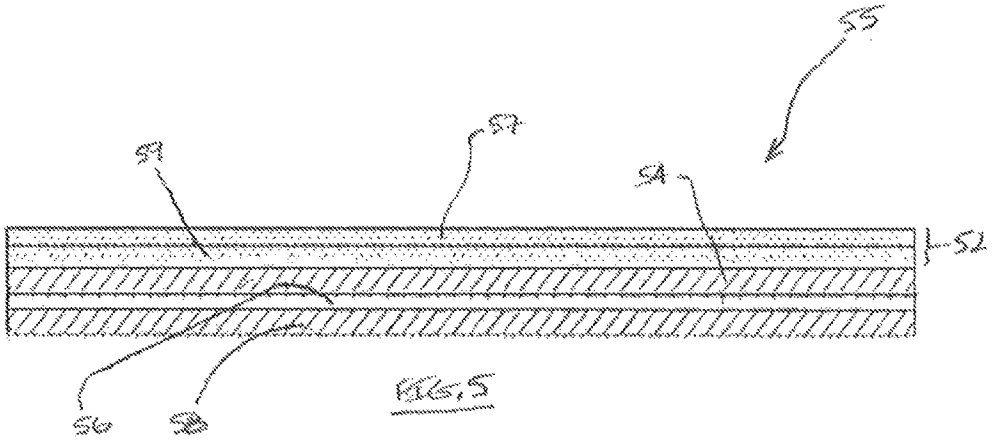

FIG. 5

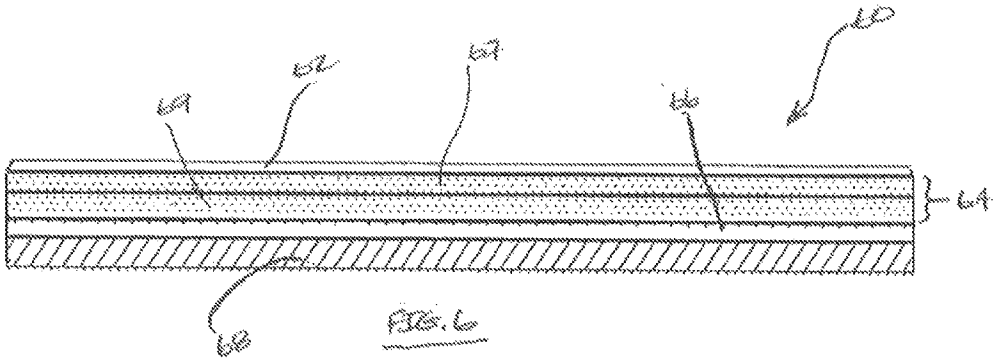

FIG. 6

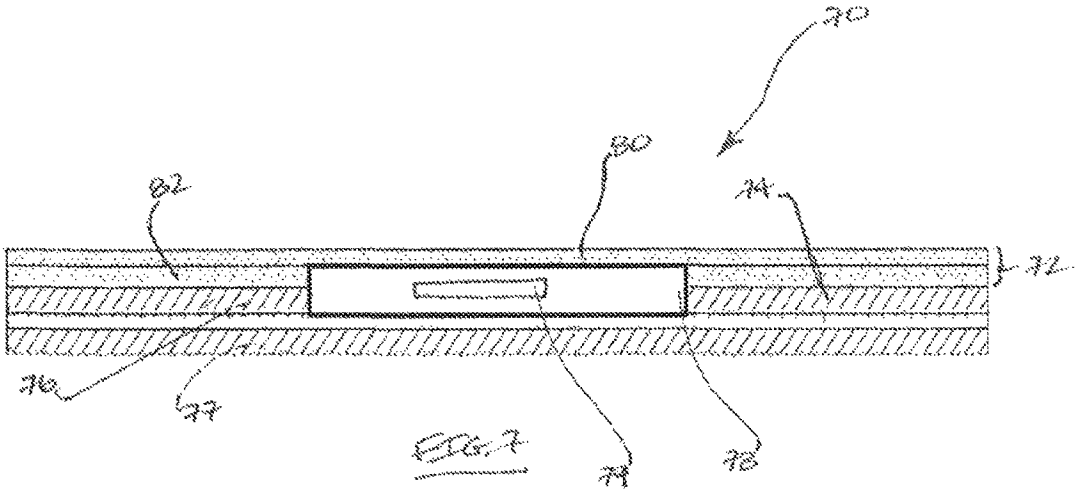

FIG. 7

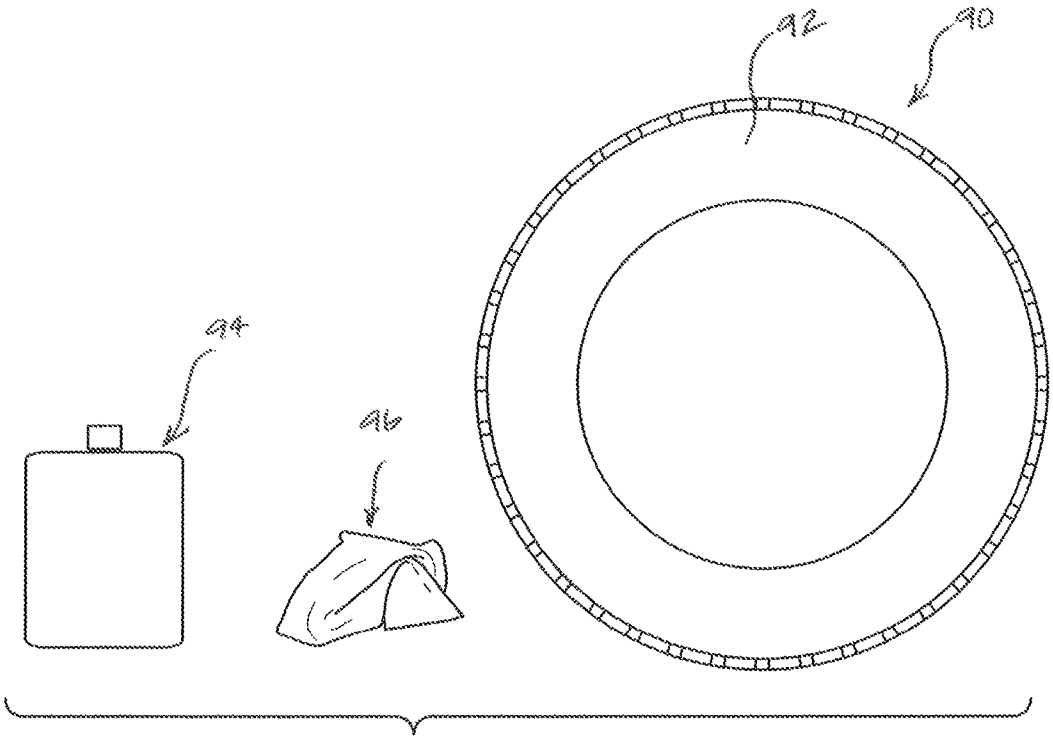

FIG. 8A

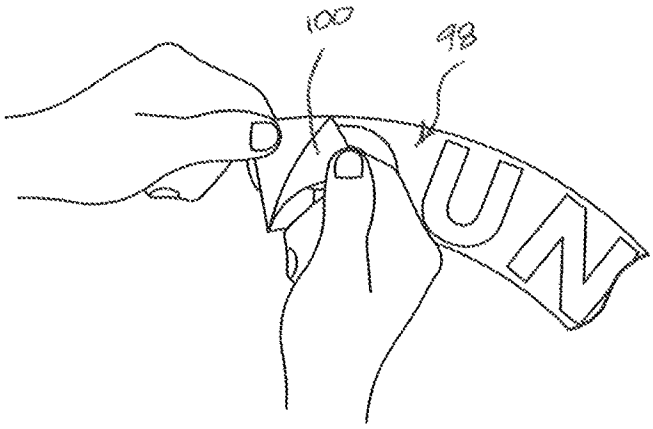

FIG. 8B

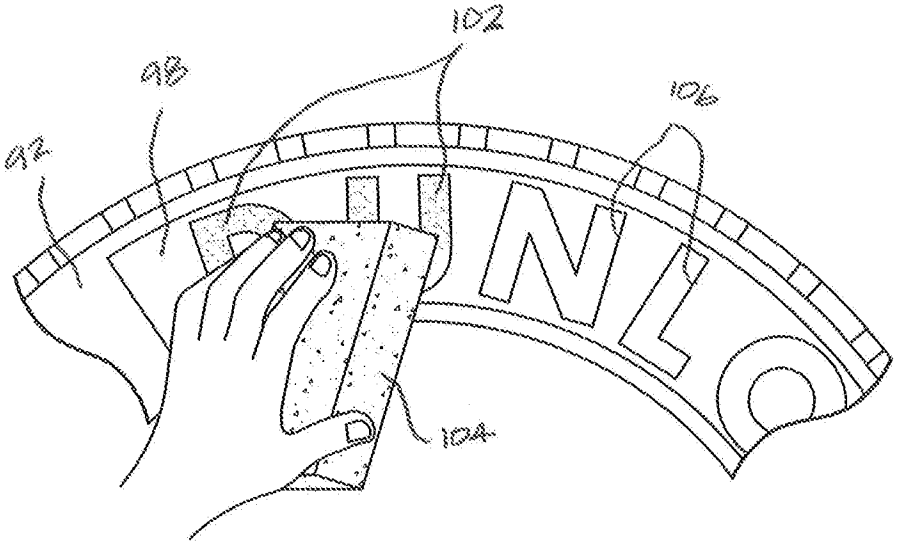

FIG. 8C

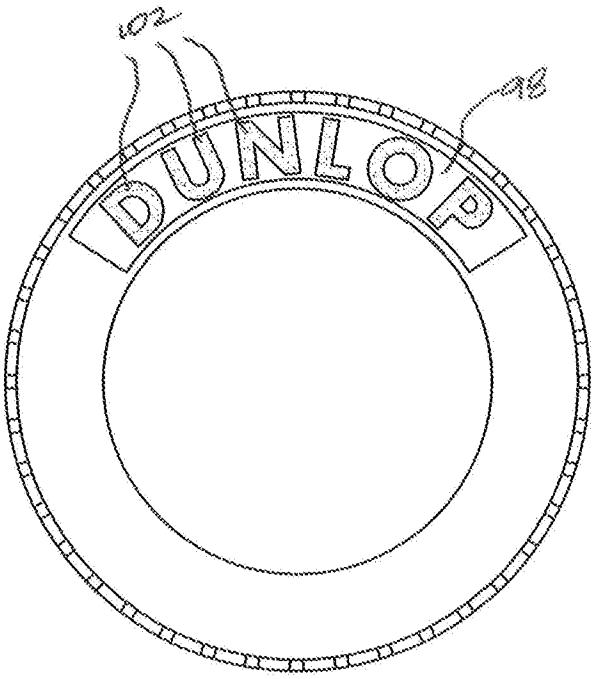

FIG. 8D

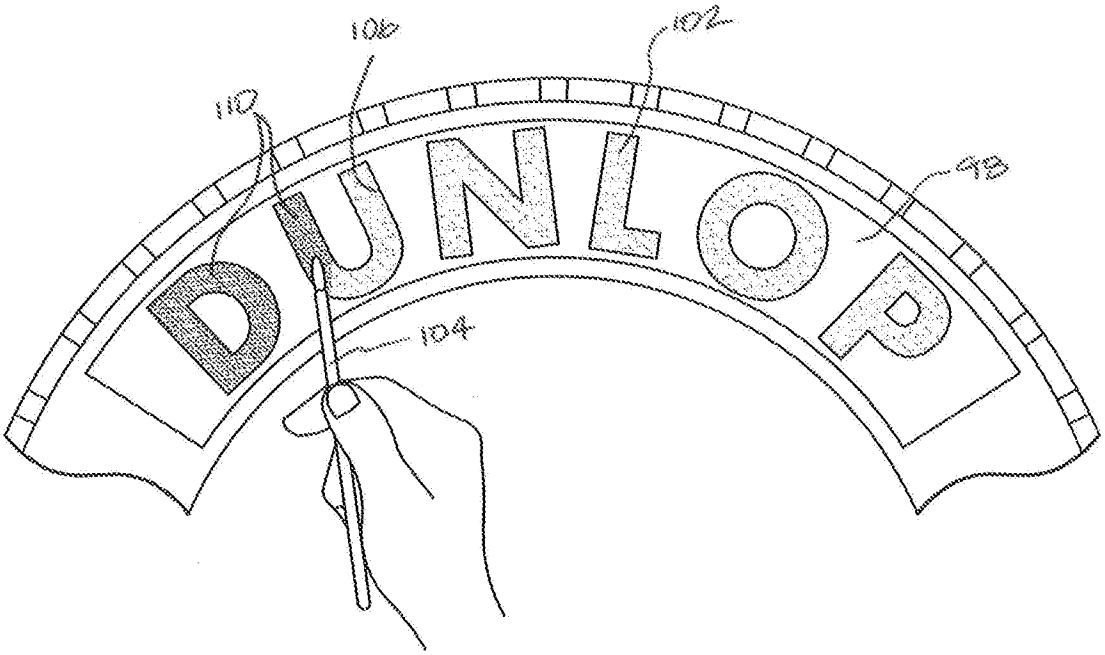

FIG. 8E

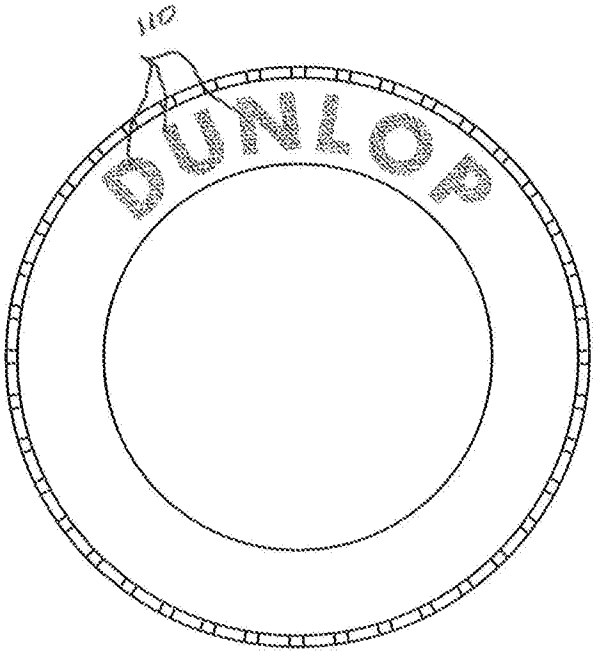

FIG. 8F

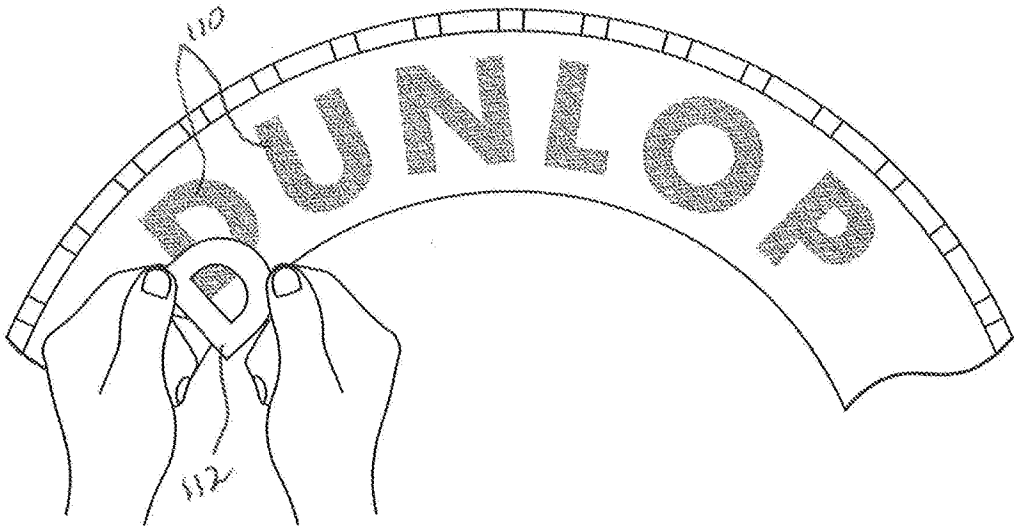

FIG. 8G

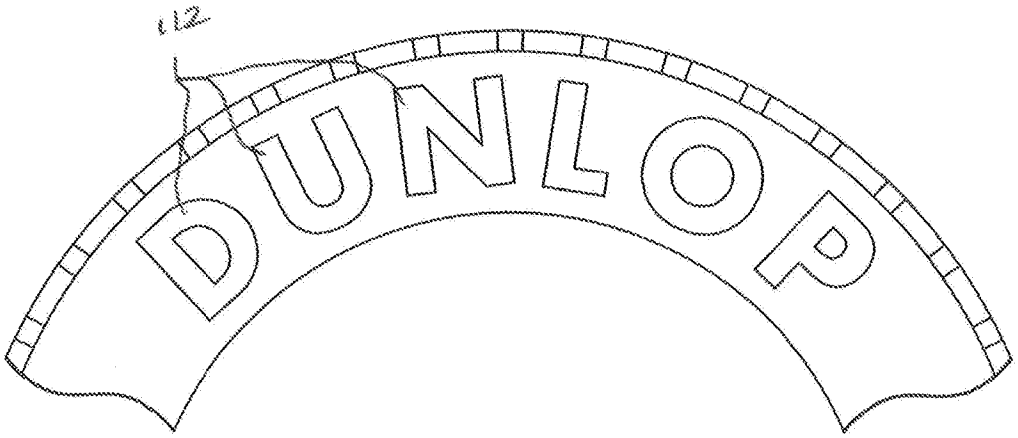

FIG. 8H

DISPLAY ASSEMBLIES AND METHODS FOR APPLYING THE SAME TO VULCANIZED RUBBER ARTICLES

CROSS-REFERENCE TO RELATED APPLICATIONS

This patent application claims the benefit of U.S. Provisional Patent Application No. 62/153,441, filed on Apr. 27, 2015, which is hereby incorporated by reference in its entirety.

FIELD

This disclosure relates to display assemblies and methods for applying the same to a vulcanized rubber article.

BACKGROUND

The use of decals or the like for use on vulcanized rubber articles such as a sidewall portion of a tire or the like is somewhat known in the art, e.g., in the form of lettering and/or designs, for the purpose of adding features of aesthetic appearance, branding or the like to the vulcanized article containing the same. Such decals known in the art adapted for such uses are constructed in a manner that is either intended for temporary rather than permanent service, and/or that is adapted for application at a point of manufacture of the vulcanized articles. For example, traditional techniques for establishing tire sidewall markings involve extrusion or molding of black rubber and often the addition of colored inks which are cured in parallel with the tire during the vulcanization process. This process, though well established and scaled for industry, requires significant investment in materials, equipment and labor along with sizable wastage costs resulting from voids, blemishes and other defective designs. In addition, this technique is extremely limiting in terms of customizable designs due to molds and dies required to achieve the desired variations, and thus the availability of this customization to individual consumers and even customers internal to the industry is extremely limited.

It is, therefore, desired that display assemblies for use with a vulcanized article be constructed in a manner that permits not only variation in the nature of the display itself, e.g., the nature of the indicia be it one or a combination of characters, designs, emblems, and combinations thereof and the like, but variation in the method of applying the same so as to facilitate application as part of or subsequent to the manufacture of the vulcanized article. It is further desired that such display assembly be constructed in a manner that facilitates use of the same once applied for a long duration, e.g., the life of the vulcanized article. It is still further desired that such display assembly be constructed in a manner so as to facilitate such long-term without sacrificing the integrity and aesthetic appearance of the display assembly.

SUMMARY

Display assemblies as disclosed herein are specially constructed for attachment with a vulcanized rubber article to provide a desired display indicia, which may be a visual display or a feature that is visually or otherwise detectable. Display assemblies as disclosed herein generally comprise a composite of different material layers specially engineered to provide a desired display indicia in a manner that will last a long time on the vulcanized rubber article. Display assemblies comprise one or more display layers of elastomeric material configured to provide a desired display indicia, an intermediate layer formed from an elastomeric material different from that of the one or more display layers, and an adhesive layer, wherein the intermediate layer is interposed between the adhesive layer and the one or more display layers.

In an example, the adhesive layer is formed from a material forming a chemical bonding between the display assembly and the surface of the vulcanized rubber article. The display assembly may comprise two display layers, wherein one display layer may be disposed beneath another display layer, and wherein the display layers may each be of a different color and/or be patterned or otherwise configured so as to provide a desired display indicia by interaction of the two. An intermediate adhesive layer may be interposed between one or more display layers and the intermediate layer. If desired, a transparent protective layer may be disposed over the one or more display layers, forming an outermost surface of the display assembly. The display assembly may comprise a cavity disposed therein that may include an element disposed therein.

Display assemblies as disclosed herein may be attached to the surface of a vulcanized article by applying an adhesive material to form the adhesive layer, wherein the adhesive layer may be applied to one or both of the surface of the vulcanized article and an underlying surface of the display assembly, and placing a display assembly into contact with the surface of the vulcanized rubber article to form a bond between the display assembly and surface. In an example, a stencil may be used to ensure placement of the display assembly in a desired arrangement, or a transfer carrier may be used to provide the display assembly in the desired arrangement for placement onto the surface.

Display assemblies as disclosed herein are constructed provide flexibility in the nature of the display indicia itself, and variation in the method of applying the same so as to facilitate application as part of or subsequent to the manufacture of the vulcanized article. Also, display assemblies as disclosed herein are constructed in a manner that facilitates use of the same once applied for a long duration, e.g., the life of the vulcanized article, without sacrificing the integrity and/or aesthetic appearance of the display assembly.

BRIEF DESCRIPTION OF THE DRAWINGS

These and other features and advantages of display assemblies and methods for making the same as disclosed herein will be appreciated as the same becomes better understood by reference to the following detailed description when considered in connection with the accompanying drawings wherein:

FIG. **1** is a perspective view of an example display assembly as disclosed herein as attached to a vulcanized article in the form of a tire sidewall;

FIG. **2** is a cross-sectional side view of a single display layer embodiment three-layer assembly '**20**' as disclosed herein, wherein layer '**22**' is defined as the outermost aesthetic layer which is vulcanized for a permanent bond along underside surface '**28**' to a shock absorbing barrier layer '**24**' layered with an adhesive layer '**26**' for permanently bonding to the vulcanized rubber article;

FIG. **3** is a cross-sectional side view of a second example display assembly as disclosed herein, wherein a double display layer embodiment comprises a four-layer assembly '**30**' having a first display layer '**31**' as the outermost aesthetic display layer which is vulcanized for a permanent

bond to a second display layer '**33**' which is further vulcanized to a shock absorbing barrier layer '**36**' layered with an adhesive layer '**38**' for permanently bonding to the vulcanized rubber article;

FIG. **4**A is a cross-sectional side view of a third example display assembly as disclosed herein comprising a single display layer with double layer adhesive and barrier four-layer assembly '**40**' having layer '**48**' as the outermost aesthetic display layer which is bonded with a shock absorbing barrier layer '**44**' using a permanent adhesive layer '**50**' and the barrier layer '**44**' is layered with another adhesive layer '**46**' for permanently bonding to the vulcanized rubber article;

FIG. **4**B is a cross-sectional side view of an alternative third example display assembly as disclosed herein comprising dual display layers with double layer adhesive and barrier—five layer assembly '**42**' having layer '**45**' as the outermost display layer which is bonded with a second or intermediate display layer '**49**' using an intermediate adhesive layer '**47**' and the intermediate display layer is bonded with a shock absorbing barrier layer '**51**' that is layered with another adhesive layer '**53**' for permanently bonding to the vulcanized rubber article;

FIG. **5** is a cross sectional side view of a fourth example display assembly as disclosed herein comprising a double display layer '**52**' embodiment five-layer assembly '**55**' having layer '**57** as the outermost aesthetic display layer which is vulcanized for a permanent bond to a second display layer '**59**' which is bonded with a shock absorbing layer '**56**' using a permanent adhesive layer '**54**' and the barrier layer '**56**' is layered with another adhesive layer '**58**' for permanently bonding to the vulcanized rubber article;

FIG. **6** is a cross section side view of a fifth example display assembly as disclosed herein comprising a double display layer '**64**' four-layer embodiment assembly '**60**' having layer '**62**' as a protective over-laminate layer disposed over all or a portion of the display layer(s) '**67**' and '**69**' vulcanized to a shock absorbing barrier layer '**66**' and layered with a permanent adhesive layer '**68**' for bonding to the vulcanized rubber article;

FIG. **7** is a cross section side view of a fifth example display assembly as disclosed herein comprising a multiple layer assembly '**70**' with cavity '**78**' having an embedded functional element '**79**' within the construction of the assembly, wherein the assembly '**70**' comprises a double display layer '**72**' with aesthetic layers **80** and **82** which also serve as perimeter layers to the cavity '**78**', wherein the display layers are vulcanized and bonded to a barrier layer '**76**' with a permanent adhesive layer '**74**' and having another layer of permanent adhesive '**77**' for bonding to the vulcanized rubber article; and

FIGS. **8**A to **8**H are schematic views of different steps of an example method for attaching a display assembly as disclosed herein to sidewall of a vulcanized rubber article in the form of a tire.

DETAILED DESCRIPTION

Display assemblies or constructions as disclosed herein are specially engineered to facilitate attachment to a vulcanized article, which may include but is not limited to tires, mud flaps, or any other member or element that is vulcanized or made from vulcanized rubber. Display assemblies as disclosed herein are provide for the purpose of providing a desired aesthetic appearance, product identification, tracking, branding, advertising, to provide a desired functional aspect to the vulcanized article, and the like to such vulcanized article. In an example, display assemblies as disclosed herein may comprise one or more elastomeric display layers providing the desired display image or function, an intermediate or barrier layer formed of an elastomeric material, and a layer of curable adhesive that is formed from a material capable of forming a strong adhesion bond with a surface of the vulcanized article. The display assemblies as disclosed herein may optionally comprise an adhesive layer interposed between the display layer and one or more of the barrier layers, and may comprise various combinations of one or more display layers, one or more intermediate or barrier layers, and one or more adhesive layers as called for by the specific end use application. Further, display assemblies as disclosed herein may optionally comprise an overcoat or transparent protective layer disposed over the display layer.

FIG. **1** illustrates an example display assembly or construction **10** as disclosed herein as attached to a vulcanized article **12**. Display assemblies as disclosed herein can be used with a variety of differently configured vulcanized articles, wherein a unifying feature of such articles or attachment substrates is that they are formed from or have an outer surface comprising vulcanized rubber. In an example, the vulcanized article may be a rubber tire, wherein the display assembly is configured to be adhered to a portion of the rubber tire. In an example, the portion of the rubber tire may be a sidewall **14** of the tire. While a particular configuration or type of vulcanized article, and a particular portion of such article, has been described as being useful as the article or substrate for adhering display assemblies as disclosed herein thereto, it is to be understood that the use of display assemblies as disclosed herein is not to be limited to such types of vulcanized articles and/or portion of the same, and such is provided for purpose of example and reference.

The display assembly **10** is provided in a desired form or configuration depending on the desired display indicia or function intended, which can be in the form of a letter, numeral, symbol, design, pattern, logo, insignia, or the like that may be continuous or non-continuous in form depending on the particular end-use application. For example, the display assembly **10** can be configured in the shape of a letter and a number of the display assemblies can be used alone or in conjunction with one or more other display assemblies that may be continuous with one another or separate from one another to provide a desired word, term, brand, logo, message, symbol, function or the like on a surface of the desired vulcanized article. For example, the display assembly **10** can be configured as a continuous member that is disposed along an entire portion of the vulcanized article, e.g., such as a sidewall stripe or other form of continuous indicia, or only along a partial designated portion of the vulcanized article.

In an example, each such display assembly **10** comprises one or more display layers that provide an outer surface of the display assembly that operates to visually provide the display image or indicia or function. The one or more display layers may be formed from an elastomeric material and may be configured to provide a desired display image or indicia on the outer surface of the display assembly **10**. In an example, the display layer may be constructed to have a desired color and/or pattern, and or shape, and/or texture useful to provide a desired display image or indicia or function. In an example, the display layer may be configured and/or colored and/or patterned to produce a desired display image or indicia or function in conjunction with an underlying barrier layer. For example, the display layer may

comprise one or more openings, e.g., a pattern of openings, and be of one color, and an underlying barrier layer may be of another color making it viewable through the display layer openings to provide the desired display image or indicia effect or function on the outer surface of the display assembly. In the event that two or more display layers are used, the different display layers may be configured and/or colored and/or textured, and/or patterned differently for the purpose of being combined together to provide the overall desired display image or indicia on the outer surface of the display assembly.

In an example, each display layer may be configured having a generally similar shape, e.g., in the shape of a letter, object, or numeral, wherein one of the display layers is provided in one color and another of the display layers is provided in a different color, and wherein the display layers are sized differently, so when combined together they operate to provide a desired visual display effect. In an example, an upper display layer may be provided having a white color and a lower display layer beneath the upper display layer may be provided having a black color, wherein the lower display layer is sized somewhat larger than the upper display layer so as to enhance the visual effect provided by the combined display layers.

Alternatively, the display layer may be provided in the form of a single layer that is patterned or that has a desired cut-out segment, and the desired display image is provided by contrast with an underlying other layer of the display assembly, e.g., which may be another display layer or a barrier layer. For example, the use of a patterned display layer in one color disposed on top of an underlying display layer or barrier layer of another color may operate to provide a desired indicia, e.g., that may be in the form of a barcode or the like used to provide an identification or other type of purpose or function.

The display assembly **10** is adhered to or otherwise attached to a surface of the desired vulcanized article **12**. In an example, the display assembly is adhered to the vulcanized article in a manner as better described below that produces a strong and lasting attachment therewith, e.g., to facilitate attachment of the display assembly to the vulcanized article for a long period of time which may be the service life of the vulcanized article. In an example, the display article is chemically bonded with the vulcanized article. In an example, the display assembly may be configured to match the contour or other surface geometry or surface feature of the vulcanized article that it is to be used with. For example, in the event that the vulcanized article is a side wall surface of a rubber tire, display assemblies as disclosed here may be configured to match the contour of the side wall surface to promote a desired optimal fit therewith when attached thereto.

FIG. **2** illustrates a first example display assembly **20** as disclosed herein comprising, moving from a surface portion of the display assembly **20** to a portion attached to a vulcanized rubber article, a display layer **22**, an intermediate or barrier layer **24**, and an adhesive layer **26**. As noted above, the display assembly **20** is configured having a shape and size as desired for a particular end-use application. In an example, the display layer **22** is provided in the form of a single layer of elastomeric material that may be colored, and/or patterned, and/or textured as desired to provide a desired display image or indicia viewable on the outer surface of the display assembly **20**. In an example embodiment, elastomeric materials useful for forming the display layer **22** include and are not limited to vulcanized rubber, natural rubber, SBR, nitrile rubber, neoprene rubber, rubber based or elastomeric ink having properties of aesthetic appeal of functional use, high elongation, UV and chemical resistance and abrasion resistance, and combinations thereof. In an example, depending on the particular size and configuration of the display assembly **20**, the display layer **22** may have a thickness greater than about 0.01 mm, of from about 0.01 to 10 mm, 0.05 to 5 mm, 0.1 to 3 mm, and in a particular example about 0.4 mm.

In an example, the intermediate or barrier layer **24** is attached or adhered along an underside surface **28** of the display layer **22**. In an example, the intermediate layer **24** extends along and covers the entire underside surface **28** of the display layer. Alternatively, the intermediate layer **24** may extend along a partial portion of the display layer underside surface **28**, which is less than the entire portion and more than a majority or 51 percent of the total area of the display layer underside surface **28**. In an example, the intermediate or barrier layer **24** is formed from a material capable of providing properties of shock absorbance, elastomeric expansion and/or contraction properties compatible with the vulcanized rubber article that the display assembly is to be attached therewith, and a desired degree of conformity between the adjacent surfaces of the display layer and the outer surface of a vulcanized rubber article (so as to maximize the surface contact area between the display assemble and vulcanized rubber article). Further, in the example illustrated in FIG. **1**, it is desired that the intermediate layer **24** be formed from a material capable of being chemically bonded to or vulcanized with the display layer **22**.

It is also desired that the intermediate or barrier layer **24** be formed from a material capable of acting as a barrier to minimize or prevent the migration of any unwanted constituents of the adhesive layer **26** and/or the vulcanized rubber article may otherwise operate to damage or degrade the design image and/or feature provided by the display layer **22**. In an example, the intermediate layer is formed from an elastomeric material. Elastomeric materials useful for forming the intermediate layer **24** include and are not limited to gum rubber, vulcanized natural rubber SBR, nitrile rubber, polyurethane, or comparable materials having properties of high elongation, conformity and chemical resistance to notable mold release agents common in the vulcanized rubber of pneumatic tires, and combinations thereof. In an example, depending on the particular size and configuration of the display assembly **20**, it is desired that the intermediate layer **24** thickness be that which is sufficient to enable the intermediate layer to function in the above-described manner. The exact thickness of the intermediate layer is understood to vary depending on the particular type of material selected for the intermediate layer as well as the particular end-use application. In an example, the intermediate layer **24** may have a thickness greater than about 0.008 mm, from about 0.008 to 10 mm, about 0.01 to 5 mm, about 0.1 mm to 1.5 mm, and in a particular example of about 0.5 mm.

It is desired that the adhesive layer **26** be formed from a material capable of forming a chemically, heat-activated or otherwise permanent bonded attachment with the vulcanized rubber article. In an example, it is desired that the attachment be one having a service life that is the same as the vulcanized rubber article so as to provide a permanent attachment therewith to permit the display assembly to function throughout the service life of the vulcanized article. The particular type of material used for the adhesive layer may vary depending on the particular display assembly application environment, e.g., in a manufacturing environment of

where the vulcanized article is being made, or in a consumer environment subsequent to the manufacture of the vulcanized article. In an example, embodiment, such as one where the display assembly is being attached to the vulcanized rubber article at the point of the vulcanized rubber article being manufactured, the adhesive layer may be formed from a material capable of forming the desired chemical bond or being vulcanized thereto under elevated temperature conditions, e.g., heat-activated adhesives. Such materials include but are not limited to thermoplastic and thermoset adhesives, heat vulcanizing cements common in retread applications, water-based or solvent based polymer polyurethane based adhesives, and combinations thereof. Such application may also call for some degree of elevated pressure being applied to the display assembly during adherence by the adhesive layer. In an example, such elevated pressure may be in the range of from about 3 to 100 Psi.

In an example, embodiment, such as one where the display assembly is being attached to the vulcanized rubber article by a consumer or the like at a point subsequent to the manufacture of the vulcanized rubber article, the adhesive layer may be formed from a material capable of forming the desired chemical bond or being vulcanized thereto ambient temperature conditions, e.g., by chemical reaction instead of being heat activated. Such materials include but are not limited to chemical cements common in retread applications, cyanoacrylate, epoxies, rubber-based acrylic pressure sensitive adhesives and combinations thereof. Such application may also call for some degree of elevated pressure being applied to the display assembly during adherence by the adhesive layer. In an example, such elevated pressure may be in the range of from about 3 to 10 Psi.

In an example, depending on the particular size and configuration of the display assembly **20**, it is desired that the adhesive layer **26** thickness be that which is sufficient to enable the adhesive layer to function in the above-described manner. The exact thickness of the adhesive layer is understood to vary depending on the particular type of material selected for the adhesive layer as well as the particular end-use application. In an example, the adhesive layer **26** may have a thickness greater than about 0.006 mm, from about 0.006 mm to 0.5 mm, 0.01 mm to 0.3 mm, 0.02 mm to 0.1 mm, and in a particular example of about 0.04 mm.

In an example, the display assembly described above and illustrated in FIG. **2** may be made by joining the display layer and intermediate layer together and then subjecting the same to vulcanizing conditions of elevated temperature and/or pressure, after which time the adhesive layer may be combined therewith, e.g., at the point of applying the display assembly. While the example display assembly illustrated in FIG. **2** has been disclosed as comprising three separate and distinct layers, it is to be understood one or both of the display layer or the adhesive layer may be configured so as to include a barrier composition at an interface therebetween that may operate to provide the barrier properties noted above, thereby avoiding the need use three separate and distinct layers for the display assembly.

FIG. **3** illustrates a second example display assembly **30** as disclosed herein comprising, moving from a surface portion of the display assembly **30** to a portion attached to a vulcanized rubber article, a display layer **32**, an intermediate or barrier layer **36**, and an adhesive layer **38**. Unlike the example illustrated in FIG. **2** and described above, the display layer **32** in this example is made up of two or more different display layers, e.g., a first or upper display layer **31** and a second or lower display layer **33**.

In this embodiment, each display layer may be sized, shaped, patterned, colored and/or textured differently from the other to provide a desired display indicia when combined together. For example, the first display layer **31** may be white in color and have a particular size, wherein the second display layer **33** may be black in color and be sized slightly larger than the first display layer for purpose of providing a desired display visual indicia. This is but one example of how the different display layers **31** and **33** can be used with one another to provide a desired display indicia. In another example, as noted above, the first display layer may be of one color and have one or more openings cut into it, and the second display layer is of another color so such color is displayed through the openings to provide a desired visual indicia on the surface of the display assembly. These are but a few examples of how the first and second display layers can be used to provide a desired display indicia for purpose of example and reference, and it is to be understood that all such variations are to be within the scope of the display assemblies as disclosed herein. Also, while an example comprising two display layers has been disclosed, it is to be understood that display assemblies as disclosed herein may comprise more than two display layers depending on the particular display indicia desired for the particular end use application.

The display layers **31** and **33**, as well as the intermediate layer **36** and adhesive layer **38** may each be formed from the same types of respective materials described above for the earlier examples. In an example, the display layers **31** and **33** may have the same thickness as described above, so that the overall thickness of the display layer **32** is generally greater than that of the earlier described examples. However, the thickness of the display layer **32** may also be less than or equal to the thickness of earlier described examples so as to meet the requirements of a particular function or aesthetic desire. As noted above for the example display assembly of FIG. **2**, the example display assembly illustrated in FIG. **3** may alternatively comprise a display layer or adhesive layer configured having a barrier composition at an interface, so as to avoid the need to obtain desired barrier properties through a separate and distinct barrier layer.

In an example, the display assembly described above and illustrated in FIG. **3** may be made by joining the display layers, and intermediate layer together and then subjecting the same to vulcanizing conditions of elevated temperature and/or pressure, after which time the adhesive layer may be combined therewith, e.g., at the point of applying the display assembly.

FIG. **4**A illustrates a third example display assembly **40** as disclosed herein comprising, moving from a surface portion of the display assembly **40** to a portion attached to a vulcanized rubber article, a display layer **48**, an intermediate adhesive layer **50**, an intermediate or barrier layer **44**, and an adhesive layer **46**. The principle difference between this second example display assembly **40** and that disclosed above and illustrated in FIG. **2** is the presence and use of an intermediate adhesive layer **50** interposed between the display layer **48** and the intermediate or barrier layer **44**. The presence of such an intermediate adhesive layer **50** in this second example operates to provide a greater degree of adhesion between the display layer **48** and the intermediate layer **44**, and may also operate to provide and extra degree of barrier protection against the migration of any unwanted constituents from the intermediate layer **44**, adhesive layer **46**, and/or the vulcanized rubber article that the display assembly is attached to.

The materials used in this second example for the display layer **48**, intermediate layer **44**, and adhesive layer **46** may be selected from the same types of materials described above for the first two examples. The thicknesses of the display layer **48**, intermediate layer **44**, and adhesive layer **46** may also be the same as that described above for the first two examples.

The intermediate adhesive layer **50** is formed from a material capable of forming a bonded attachment between and underside surface of the display layer **48** and a surface of the intermediate barrier layer **44**, and optionally acting as a barrier to minimize or prevent the migration of any unwanted constituents into the display layer **48**. In an example, the intermediate adhesive layer **50** is formed from a thermoset adhesive. Thermoset adhesives useful for forming the intermediate adhesive layer **50** include and are not limited to heat vulcanizing cements common in retread applications, water-based or solvent based polymer polyurethane based adhesives, epoxies and combinations thereof. In an example, depending on the particular size and configuration of the display assembly **40**, it is desired that the intermediate adhesive layer **50** thickness be that which is sufficient to enable the intermediate adhesive layer to function in the above-described manner. The exact thickness of the intermediate adhesive layer is understood to vary depending on the particular type of material selected for the display layer and the intermediate layer as well as the particular end-use application. In an example, the intermediate adhesive layer **50** may have a thickness greater than about 0.006 mm, of from about 0.006 mm to 0.5 mm, about 0.01 mm to 0.3 mm, and in a particular example about 0.025 mm.

In an example, the display assembly described above and illustrated in FIG. **4** may be made by joining the display layer, the intermediate adhesive layer, and intermediate layer together and then subjecting the same to vulcanizing conditions of elevated temperature and/or pressure, after which time the adhesive layer may be combined therewith, e.g., at the point of applying the display assembly. While the example display assembly illustrated in FIG. **4**A has been disclosed as comprising four separate and distinct layers, it is to be understood that one or more of the display layer, intermediate adhesive layer, barrier layer, or the adhesive layer may be configured as a composite having properties of another layer so as to reduce the total number of separate and distinct layers used for making the display assembly **40**. For example, the intermediate adhesive layer may be configured having a barrier composition along an interface with the adhesive layer, thereby avoiding the need to use a separate and distinct barrier layer, or the barrier layer may be configured comprising an adhesive composition on or both of its surfaces so as to avoid having to use one or more separate adhesive layers. These are just a few examples of how composite compositions may be used in such multilayer display assemblies to reduce the total number of separate and distinct materials layers used while still providing all of the desired described properties.

FIG. **4**B illustrates an example display assembly **42** that is somewhat similar to that illustrated in FIG. **4**A, in that it comprises a display layer **45** on a top surface, an intermediate adhesive layer **47** below the display layer. However, in this particular example, the display assembly **42** includes a second or intermediate display layer **49** that is interposed between the intermediate adhesive layer **47** and the barrier layer **51**, and like in the third example an adhesive layer **53** is disposed beneath the barrier layer. A feature of such construction is the ability to configure the uppermost display layer **45**, e.g., shape, size and/or patterning of openings or the like to reveal at least a portion of the intermediate display layer **49** to provide the desired display indicia. Also, in such an example, a sub assembly made up of the adhesive layer **53**, barrier layer **51**, and intermediate display layer **49** may be made and combined in the manner noted above and adhered to the desired substrate portion, e.g., a vulcanized rubber article. After such sub assembly has been attached to the desired substrate, then the uppermost display layer **45** may be attached thereto through the use of the intermediate adhesive layer **47**. The ability to construct the display assembly in this manner, through the use of a sub assembly and later applied display layer adds flexibility in being able to provide the desired display layer after a portion of the assembly has already been installed on the substrate. It also allows for the subassembly to be manufactured and kept in stock as the standard subassembly for a variety of different types of upper most display layers. An example of such a display assembly may include white walls, red walls, or other colored walls or other desired type of indicia that may now be selected and applied after the standard stock subassembly has been attached to the substrate.

FIG. **5** illustrates a fourth example display assembly **55** as disclosed herein comprising, moving from a surface portion of the display assembly **55** to a portion attached to a vulcanized article, a display layer **52**, an intermediate adhesive layer **54**, an intermediate barrier layer **56**, and an adhesive layer **58**. Like the example illustrated in FIG. **3** and described above, the display layer **52** in this example is made up of two or more different display layers, e.g., a first or upper display layer **57** and a second or lower display layer **59**. Like the example illustrated in FIG. **4**A and described above, the display assembly **50** comprises an intermediate adhesive layer **54** that is interposed between the display layer **52** and the intermediate barrier layer **56**.

The intermediate adhesive layer **54** operates in the same manner as described above for the example illustrated in FIG. **4**A, to provide a greater degree of adhesion between the display layer **52** and the intermediate barrier layer **52**, and may be formed from the same materials and have the same layer thickness as that described above for the example illustrated in FIG. **4**A.

In an example, the display assembly **50** may be made by joining the display layer, the intermediate adhesive layer, and intermediate layer together and then subjecting the same to vulcanizing conditions of elevated temperature and/or pressure, after which time the adhesive layer may be combined therewith, e.g., at the point of applying the display assembly.

FIG. **6** illustrates a fifth example display assembly **60** as disclosed herein comprising, moving from a surface portion of the display assembly **60** to a portion attached to a vulcanized article, protective layer **62**, a display layer **64** (comprising an upper display layer **67** and a lower display layer **69**), an intermediate barrier layer **66**, and an adhesive layer **58**. A feature of this example is the presence of a protective layer **62** that is disposed over the display layer, wherein the protective layer is formed from an optically transparent material and may be used to enhance and/or protect the display layer from external elements that may damage or otherwise degrade the indicia provided by the display layer, thereby enhancing the service life of the display assembly. While the protective layer has been disclosed in the context of being used with the particular display assembly construction as illustrated in FIG. **6**, it is to be understood that the protective layer may be used with any and all of the display assemblies as disclosed herein.

In an example, the protective layer may cover the entire surface of the underlying display layer, or display layers in the event the display assembly comprises more than one display layer, or a partial portion of the display layer depending on the particular display indicia and/or the particular end-use application. Materials useful for forming the protective layer are preferably elastomeric, e.g., having the same degree of flexibility or elasticity as that of the underlying display layer, and may be selected from materials including and not limited to polyurethane, vinyl, polyethylene terephthalate, rubber-based elastomeric inks, and combinations thereof. In an example, depending on the particular size and configuration of the display assembly, it is desired that the protective layer thickness be that which is sufficient to enable the protective layer to function in the above-described manner. The exact thickness of the protective layer is understood to vary depending on the particular type of material selected for the protective layer as well as the particular end-use application. In an example, the protective layer may have a thickness greater than about 0.006 mm, of from about 0.006 mm to 0.3 mm, about 0.01 mm to 0.2 mm, and in a particular example about 0.025 mm.

FIG. **7** illustrates a sixth example display assembly **70** as disclosed herein comprising, moving from a surface portion of the display assembly **70** to a portion attached to a vulcanized article, a display layer **72**, an intermediate adhesive layer **74**, an intermediate barrier layer **76**, and an adhesive layer **77**, wherein a cavity **78** is disposed within the assembly for the purpose of accommodating an element or object **79** therein. Like the example illustrated in FIG. **5** and described above, the display layer **72** in this example is made up of two or more different display layers, e.g., a first or upper display layer **80** and a second or lower display layer **82**.

A feature of this particular embodiment is the presence of a cavity **78** that is formed in the display assembly **70** for the purpose of accommodating placement of an element or object **79** therein. For purpose of reference, a display construction somewhat similar to that illustrated in FIG. **5** was used to disclose the cavity feature for purposes of reference and example, and it is to be understood that display assemblies as disclosed herein comprising cavities may be embodied having other display assembly constructions as disclosed herein.

In this example, the cavity is formed within the second display layer **82** and the intermediate adhesive layer **74** and is configured to accommodate a desired element or object therein, wherein such element or object may be any type of rigid or non-rigid element, passive or non-passive element, functional or nonfunctional element that may be useful for including in the display assembly. Examples of the types of objects or elements that may be disposed in the cavity include RFID elements, GPS elements, lighting elements such as LEDs or the like, and the like. In an example, the cavity is configured within the construction to provide an area capable of accommodating such an element or object without damaging the element or object, and without causing damage to the display assembly itself during use of the vulcanized rubber article that it is attached thereto. In the example illustrated in FIG. **7**, the cavity is positioned beneath the first display layer **80**, and if desired the first display layer may comprise one or more openings for the purpose of displaying a portion of the object or element disposed within the cavity. It is to be understood that display assemblies comprising a cavity as disclosed herein may include the cavity positioned differently, e.g., formed within one or more different assembly layers, than that illustrated in FIG. **7** depending on the particular display assembly, the particular configuration of the cavity, the particular element or object disposed within the cavity and its intended purpose and/or function, and/or the particular end-use application of the vulcanized article.

While the cavity feature of display assemblies has been disclosed with reference to particular examples and illustrations, it is to be understood that display assemblies as disclosed herein may be constructed with the cavity positioned other than as disclosed or illustrated. For example, the design assembly may be configured with the cavity deposed along an outer portion of the assembly, which may be a display layer, in which case an element disposed within the cavity would be viewable from outside of the display assembly. An example of such may be one where a light element is disposed within the cavity for purposes of providing illumination or an illuminated visual effect or the like outside of the display assembly that is viewable from outside of the vulcanized article. In such example, the cavity may be open and exposed to the external environment, or a layer of transparent material or the like may be optionally disposed thereover. This is but one example provided for the purpose of illustrating how the cavity may be positioned differently within the display assembly to enable a desired function or purpose.

While the display assemblies as disclosed herein have been referenced by example and illustration having certain features and/or characteristics, it is to be understood that display assemblies meeting the general construction parameters as disclosed herein and having additional elements are intended to be within the scope of display assemblies as covered herein. For example, while display assemblies may be configured to provide a desired display indicia or the like through the shape, design, configuration or the like of the one or more display layers, Display assemblies as disclosed herein may be configured to provide a desired display indicia through the use of printed, marked or other type of provided feature that may be included in or on the display layer. For example, the display assembly may comprise a desired display indicia provided in the form of an ink symbol, letter, or other marking feature or object that is disposed on or into the display layer, which symbol, letter, or other marking feature or object may be a brand, logo or the like.

Display assemblies as disclosed herein may have a different total thickness depending on the particular construction features within the display assembly. In an example, the display assembly may have a total thickness, as measured from a top surface of the display assembly (adjacent the display layer or protective layer) to a bottom surface (adjacent the adhesive layer) of greater than about 0.0025 mm, from about 0.0025 mm to 10 mm, from about 0.01 to 5 mm, about 0.1 to 3 mm, and in a particular example about 0.4 mm. It is to be understood that the exact thickness of the display assembly can and will vary depending on the particular display assembly construction and/or end-use application.

Display assemblies as disclosed herein may be constructed to accommodate different conditions for applying the display assembly to a desired vulcanized rubber article, e.g., to accommodate application during manufacturing of the vulcanized rubber article, or to accommodate application after the vulcanized rubber article has been made. In an example, display assemblies may be attached to a surface of a vulcanized rubber article, e.g., a sidewall surface of a pneumatic tire, by reaction that may include and not be limited to heat and/or pressure and/or chemical bonding so

as to provide a desired aesthetic appeal in the form of desired visual indicia, such as lettering and/or other objects or shapes or designs and/or functional use, such as with bar coding or RFID technology, capable of withstanding the tire manufacturer recommended life cycle. In an example, the element or object disposed within the cavity and affixed to the vulcanized article via the display assembly as disclosed herein may have compatibility programmable functionality, such as RFID read/write capability, circuit board/programmable system which can control a device such as a light element like an LED in a predetermined manner. Such functionality may be innate with the element disposed in the cavity or may be controlled by a separate component whether connected by wire or wirelessly, e.g., blue-tooth enabled, radio controlled or other frequency connection. In an example, the cavity may be configured within the display assembly to accommodate a light element there, such as one or more LEDs therein, so that the display assembly emits light that can be seen by a person looking at the vulcanized article. In an example, the light element may be controlled to provide a desired illumination.

FIGS. **8**A to **8**H illustrate different steps useful for applying the display assembly according to an example method of applying. Referring to FIG. **8**A, in an example method of applying, the intended or target surface **92** of the vulcanized rubber article **90** is cleaned so as to remove any dirt, oil, debris or other foreign agents or containments that could interfere with forming a desired attachment bond with the display assembly. A suitable cleaning solution **94** or preparation agent can be used for this purpose. In an example, such cleaning solution **94** can be selected from but not limited to the group of organic or inorganic solutions such as acetone or the like. In an example, the cleaning solution **94** can be applied and used to clean the surface by use of a fabric material **96** or the like. As illustrated in FIG. **8**C, in an example, it may be desired to further treat the surface **92** by roughening the surface through the use of an abrasive means **104** such as sand paper or the like until the surface displays a rough texture, and then cleaning the treated surface, e.g., with the cleaning solution, to ensure that it is free of any surface debris from the treatment process.

Referring to FIG. **8**B, in certain applications, it may be desired to use a stencil **98** or template for the purpose of properly/accurately locating the display assembly on the surface of the vulcanized rubber article. For example, in the case where a series of the display assemblies are to be applied to a sidewall surface of a tire to provide a desired string of letters, numerals and/or designs or the like, a stencil **98** or template may be used to ensure that the display assemblies are positioned at a proper spacing and/or at a proper location along the sidewall surface. The stencil **98** may be provided in the form of a semi-rigid material such as paper, plastic film or the like that can be applied to the target surface. As shown in FIG. **8**C, the stencil **98** can be removably attached to the target surface **92** or held in place by hand. Referring back to FIG. **8**B, in an example, the stencil **98** or template comprises a pressure sensitive adhesive backing and is prepared for adhered placement against the target surface by removing a carrier sheet **100** covering the adhesive and pressing the stencil into contact with the target surface **92** at the desired position to ensure an adequate bond, specifically around the cut out areas in the stencil (as best shown in FIG. **8**C). Referring to FIG. **8**C, in an example where a stencil **98** or template is used, the steps of treating the target surface **92** by sanding or the like and then cleaning the treated surface is preferably done after the stencil has been placed into position, thereby limiting the target surface area **102** being prepared to only that exposed by the cut out areas **106** of the stencil **98**. FIG. **8**D illustrates the target surface areas **102** of the sidewall as treated by sanding with the template **98** still in place.

Alternatively, instead of using a separate stencil for purposes of applying the display assembly in a desired arrangement, the displace assembly may be configured having a transfer carrier adhered to an upper most surface of the display assembly, wherein the display assembly is positioned on the transfer film in a desired arrangement for placement onto the target surface without the use of a stencil to provide the a visual display having the desired arrangement.

Referring to FIGS. **8**E and **8**F, a desired adhesive material **110**, selected from the materials described above, is applied to the treated surface **102** by suitable means, which can be by spray, roll, brush **104** or the like to form a desired thickness of the adhesive layer to receive the display assembly. In example where a stencil **98** is used, the adhesive **104** is applied to the cut out section or sections **106** and the template **98** is removed before the adhesive cures so as to avoid difficult template removal. FIG. **8**F illustrates the treated surfaces coated with adhesive material **110** after with the template removed, wherein the treated surfaces having the adhesive material is in the form of a series of letters. Alternatively, or in addition to the method of adhesive application disclosed above, the adhesive may be applied to the underside surface of the display assembly that is then applied to the target surface.

In an example, the adhesive material once applied to the target surface is allowed to dry for a predetermined period of time, which amount of time can and will vary depending in the particular type of adhesive material used. In an example, the adhesive material that is used is Heavy Duty Blue Vulcanizing Fluid by Tech International and it is allowed to dry for a period of approximately 20-30 minutes. Referring to FIGS. **8**G and **8**H, once the adhesive material **110** has dried for the determined time, the display assembly **112** is placed onto the adhesive material layer **110**. In an example, the display assembly **112** is pressed into contact with the adhesive layer and target surface by using a stitching tool, whereby moderate pressure is applied onto the display assembly by rolling the stitching tool over the entire surface area of the display assembly to ensure complete bonding and adherence between the display assembly and the vulcanized rubber article by the adhesive layer. FIG. H illustrates a number of the display assemblies **112** attached to respective target surfaces containing the adhesive material. In the example where a transfer carrier is used rather than the stencil, once the display assembly is applied to the target surface and bonded thereto, the transfer carrier is removed from the display assembly, having served its purpose to provide the display assembly in a desired form, configuration or arrangement on the target surface.

In an example, it is desired that the so-applied display assembly be allowed to cure for a predetermined amount of time before the vulcanized rubber article is placed into use. For example, when the article is a tire sidewall, it is desired that the display assembly be allowed to cure for at least 8 hours before a vehicle comprising the tire or tires are operated. In an example, ideally it is desired that the display assembly be allowed to cure for 24 hours before the vulcanized article in the form of tires are operated.

In another example method, display assemblies as disclosed herein may be applied to a desired vulcanized rubber article at the point of manufacture. In an example, wherein the vulcanized rubber article is a tire, display assemblies

may be applied in a similar manner as disclosed above, with a difference being that the adhesive material may be provided in the form of a heat-activated material, in which case once the adhesive material is applied to the target surface heat is used to cause the display assembly to be adhered thereto. In such example, pressure may also be applied by suitable machinery as the adhesive material is curing to ensure a desired bonding occurs between the vulcanized rubber article and the display assembly.

While the display assemblies and method of applying the same as disclosed herein have been presented with respect to the described and illustrated embodiments, it is to be understood that the disclosure is not to be limited to those alternatives and described embodiments.

What is claimed is:

1. A display assembly for attachment with a vulcanized rubber article comprising:

one or more display layers of elastomeric material configured to provide a display indicia;

an intermediate layer formed from an elastomeric material that is different from that of the one or more display layers, wherein the intermediate layer is in direct contact with at least of the one or more display layers, and wherein the one or more display layers and the intermediate layer are vulcanized together before attachment with the vulcanized rubber article; and

an adhesive layer in direct contact with an underside surface of the intermediate layer opposite the one or more display layers, wherein wherein the adhesive layer is formed from a material capable forming a chemical bond with a surface of the vulcanized rubber article at ambient temperature conditions.

2. The display assembly as recited in claim **1** comprising a first display layer and a second display layer disposed beneath the first display layer, wherein the second display layer is in directly contact with a topside surface of the intermediate layer opposite the underside surface.

3. The display assembly as recited in claim **2** wherein the first display layer is colored or shaped differently from the second display layer.

4. The display assembly as recited in claim **1** wherein the adhesive layer is formed from a material capable of providing the chemical bond attachment with the surface of the vulcanized rubber article by hand pressure.

5. The display assembly as recited in claim **4** wherein the hand pressure in from about 3 to 10 Psi.

6. The display assembly as recited in claim **1** further comprising a protective layer disposed over the one or more display layers and forming an outermost surface of the display assembly, the protective layer formed from an optically transparent material.

7. The display assembly as recited in claim **1** further comprising a cavity disposed therein.

8. The display assembly as recited in claim **7** further comprising an element disposed within the cavity.

9. The display assembly as recited in claim **7** wherein the cavity is disposed beneath the one or more display layers.

10. The display assembly as recited in claim **2** wherein the first display layer includes one or more openings therethrough, and wherein the second display layer is visible through the one or more openings.

11. A method for attaching a display assembly to a surface of a vulcanized rubber article comprising the steps of;

preparing a surface of a vulcanized rubber article by cleaning the surface;

applying an adhesive material to form an adhesive layer;

placing a display assembly into contact with the surface with the adhesive layer interposed therebetween to form a bond between the display assembly and surface, the display assembly comprising:

one or more display layers of elastomeric material constructed to provide a display indicia; and

an intermediate layer formed from an elastomeric material that is different from that of the one or more display layers, wherein the intermediate layer is vulcanized to at least one of the one or more display layers before attachment to the vulcanized rubber article to form the display assembly;

wherein during the step of placing, an underside surface of the intermediate layer of the display assembly is placed into direct contact with the adhesive layer, and wherein the adhesive layer is formed from a material that chemically bonds the display assembly to the surface of the vulcanized rubber article at ambient temperature conditions and by hand pressure.

12. The method as recited in claim **11** further comprising treating the surface of the vulcanized rubber article to roughen the surface before the step of placing.

13. The method as recited in claim **12** further comprising applying a template to the surface of the vulcanized rubber article before the step of applying the adhesive material, wherein the template has a cut out section and wherein, during the step of applying, the adhesive material is applied to the surface exposed through the cut out section.

14. The method as recited in claim **11** wherein the hand pressure is from about 3 to 10 Psi.

15. The method as recited in claim **11** wherein the display assembly further comprises an optically transparent protective layer disposed over an outermost surface of the one or more display layers.

16. The method as recited in claim **11** wherein the display assembly comprises a transfer carrier disposed on an outer surface of the one or more display layers and, wherein after the step of placing, the transfer carrier is removed from the display assembly.

17. The method as recited in claim **11** wherein after the step of placing, a further display layer is placed onto the one or more display assembly display layers and an adhesive layer is interposed between the further display layer and the display assembly.

18. The method as recited in claim **11** wherein the vulcanized rubber article is tire, and wherein the surface is a sidewall surface of the tire.

19. A vulcanized rubber tire comprising:

a target surface disposed along a portion of the rubber tire;

a display assembly disposed onto the target surface and comprising:

one or more display layers of elastomeric material;

an intermediate layer formed from an elastomeric material different from that of the one or more display layers and vulcanized to at least one of the one or more display layers prior to attachment to the target surface; and

an adhesive layer forming a chemical bond between an underside surface of the intermediate later and the target surface, wherein the chemical bond is formed at ambient temperature conditions.

20. The rubber tire as recited in claim **19** wherein the one or more display layers comprise two display layers, and wherein the two display layers are configured within the assembly to provide a desired display indicia.

* * * * *

Exhibit D

US011124027B2

(12) **United States Patent**
Ferry et al.

(10) **Patent No.: US 11,124,027 B2**
(45) **Date of Patent: *Sep. 21, 2021**

(54) **DISPLAY ASSEMBLIES AND METHODS FOR APPLYING THE SAME TO VULCANIZED RUBBER ARTICLES**

(71) Applicants: **Keith George Ferry**, Studio City, CA (US); **Jason Michael Busch**, Studio City, CA (US)

(72) Inventors: **Keith George Ferry**, Studio City, CA (US); **Jason Michael Busch**, Studio City, CA (US)

(*) Notice: Subject to any disclaimer, the term of this patent is extended or adjusted under 35 U.S.C. 154(b) by 245 days.

This patent is subject to a terminal disclaimer.

(21) Appl. No.: **16/201,903**

(22) Filed: **Nov. 27, 2018**

(65) **Prior Publication Data**

US 2019/0168547 A1 Jun. 6, 2019

Related U.S. Application Data

(63) Continuation of application No. 15/139,272, filed on Apr. 26, 2016, now Pat. No. 10,137,741.

(Continued)

(51) **Int. Cl.**
B60C 13/00 (2006.01)
B44C 1/16 (2006.01)

(Continued)

(52) **U.S. Cl.**
CPC ***B60C 13/001*** (2013.01); ***B29C 65/52*** (2013.01); ***B29C 66/02245*** (2013.01);

(Continued)

(58) **Field of Classification Search**
USPC 428/914; 427/148; 156/116, 240
See application file for complete search history.

(56) **References Cited**

U.S. PATENT DOCUMENTS

4,461,795 A 7/1984 Ogawa
5,198,301 A 3/1993 Hager et al.

(Continued)

FOREIGN PATENT DOCUMENTS

JP H05338032 A 12/1993
JP 2004299201 A 10/2004

(Continued)

OTHER PUBLICATIONS

International Search Report dated Jul. 27, 2016 for corresponding International Application No. PCT/US2016/029605 filed Apr. 27, 2016; total 5 pages.

(Continued)

Primary Examiner — Fred M Teskin
(74) *Attorney, Agent, or Firm* — Snell & Wilmer L.L.P.

(57) **ABSTRACT**

Display assemblies as disclosed herein are configured for attachment with a vulcanized rubber article and are provided in the form of different material layers. Display assemblies generally comprise one or more display layers of elastomeric material configured to provide a desired display indicia, an intermediate layer formed from an elastomeric material different from that of the one or more display layers, and an adhesive layer wherein the intermediate layer is interposed between the adhesive layer and the one or more display layers. The one more display layers may be configured to act together or separately to provide a desired display indicia to provide a desired visual display or feature on the surface of the vulcanized rubber article, which may be a sidewall surface of a tire.

23 Claims, 8 Drawing Sheets

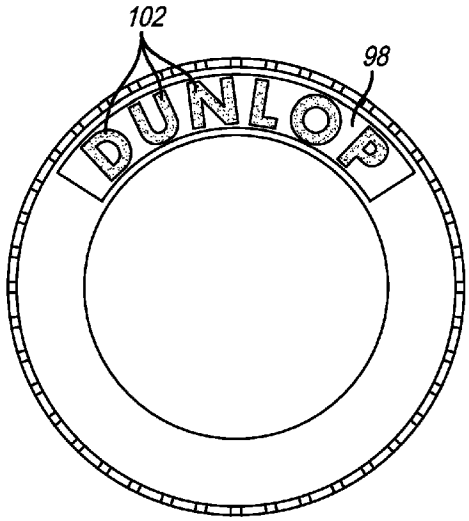

Related U.S. Application Data

(60) Provisional application No. 62/153,441, filed on Apr. 27, 2015.

(51) **Int. Cl.**

B29C 65/52	(2006.01)
B29D 30/72	(2006.01)
B32B 7/12	(2006.01)
B32B 25/04	(2006.01)
B29C 65/00	(2006.01)
B29L 30/00	(2006.01)

(52) **U.S. Cl.**

CPC ***B29C 66/5326*** (2013.01); ***B29D 30/72*** (2013.01); ***B32B 7/12*** (2013.01); ***B32B 25/042*** (2013.01); ***B44C 1/162*** (2013.01); *B29D 2030/728* (2013.01); *B29L 2030/00* (2013.01)

(56) **References Cited**

U.S. PATENT DOCUMENTS

5,300,164	A	4/1994	DeTrano et al.	
5,508,084	A	4/1996	Reeves et al.	
6,030,676	A	2/2000	Cottin et al.	
6,080,465	A	6/2000	Boissonnet et al.	
6,235,376	B1	5/2001	Miyazaki et al.	
6,391,134	B1	5/2002	Lipovac	
7,387,144	B2	6/2008	Byrne	
8,834,974	B1	9/2014	Ferry et al.	
10,137,741	B2 *	11/2018	Ferry	B29D 30/72
2005/0059308	A1	3/2005	Parsons	
2010/0092716	A1	4/2010	Spychalsky	

FOREIGN PATENT DOCUMENTS

JP	2008197887	A	8/2008
JP	2014213718	A	11/2014

OTHER PUBLICATIONS

Written Opinion of the International Searching Authority dated Jul. 27, 2016 for corresponding International Application No. PCT/US2016/029605 filed Apr. 27, 2016; total 6 pages.

International Preliminary Report on Patentability dated Oct. 31, 2017 for corresponding International Application No. PCT/US2016/029605 filed Apr. 27, 2016; total 7 pages.

Non-Final Office Action dated Apr. 5, 2018 in corresponding U.S. Appl. No. 15/139,272, filed Apr. 26, 2016; total 28 pages.

Notice of Allowance dated Sep. 24, 2018 in corresponding U.S. Appl. No. 15/139,272, filed Apr. 26, 2016; total 5 pages.

Examination Report dated Oct. 10, 2019 in corresponding Australian Application No. 2016255775 filed Nov. 27, 2017; total 6 pages.

* cited by examiner

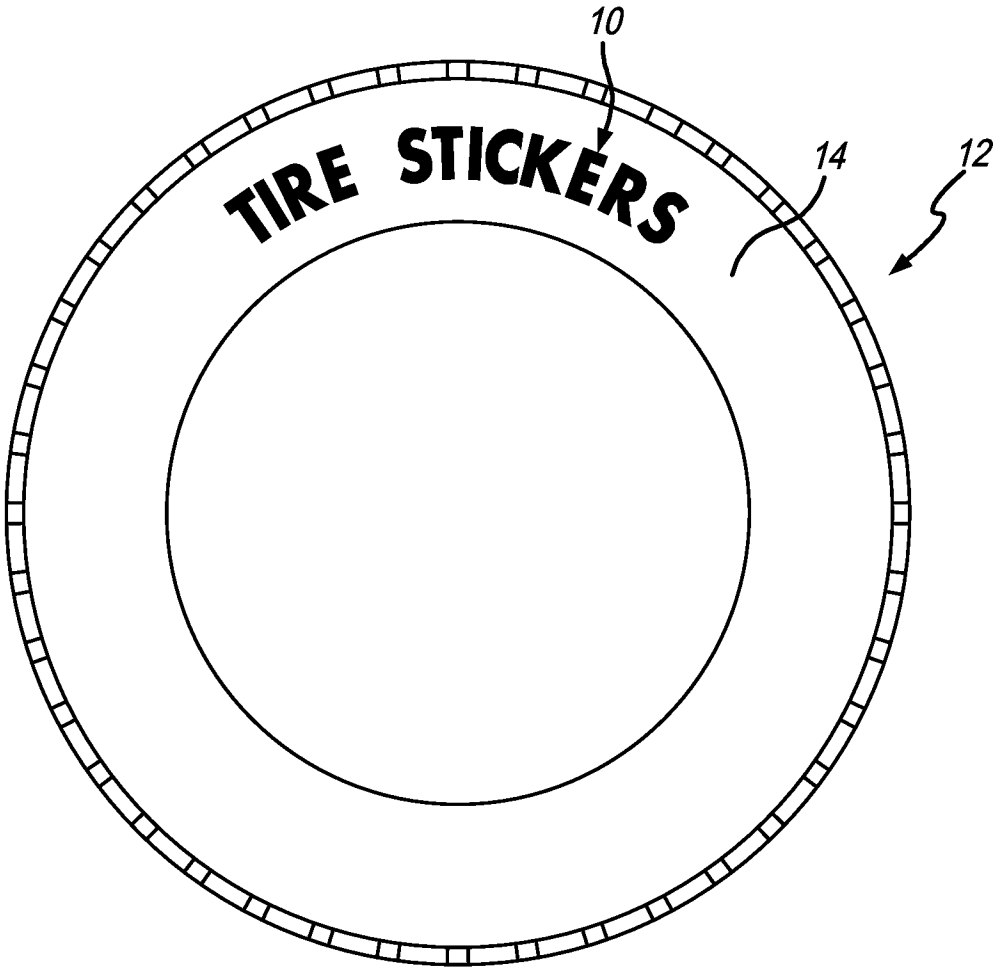

FIG. 1

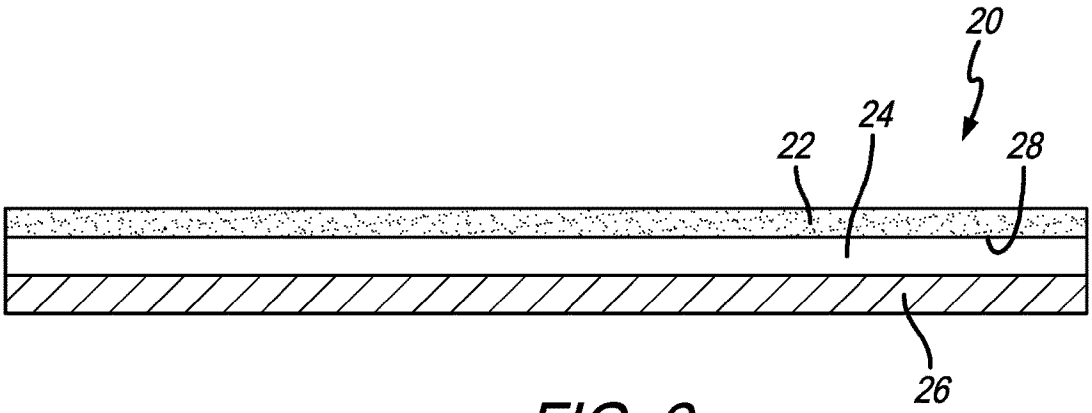

FIG. 2

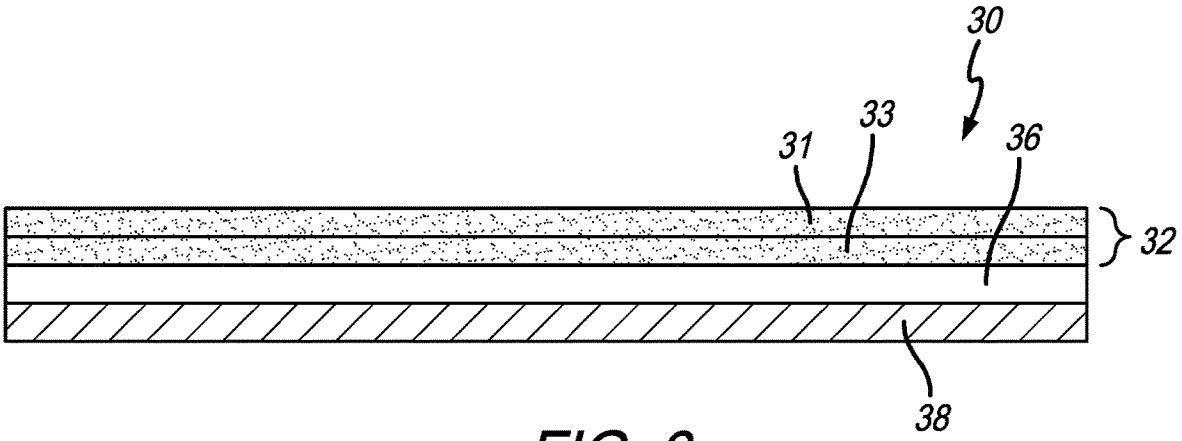

FIG. 3

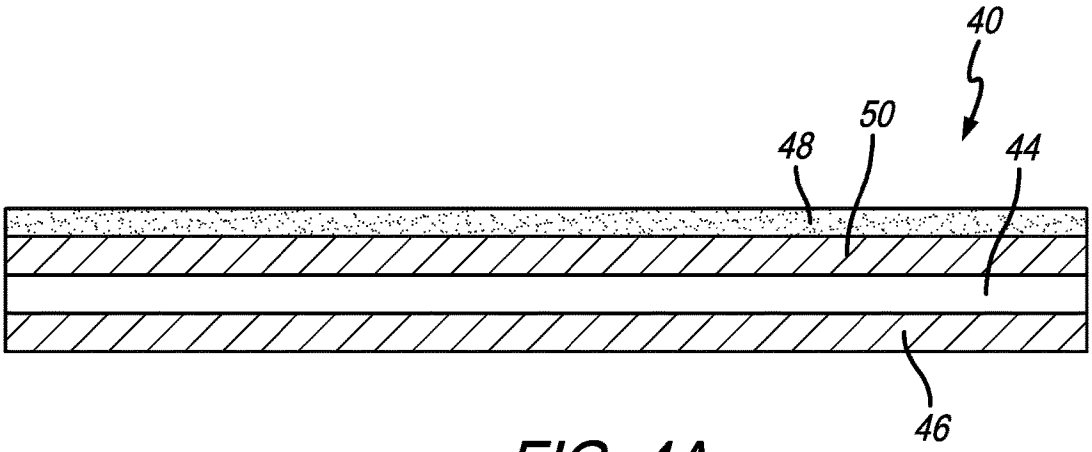

FIG. 4A

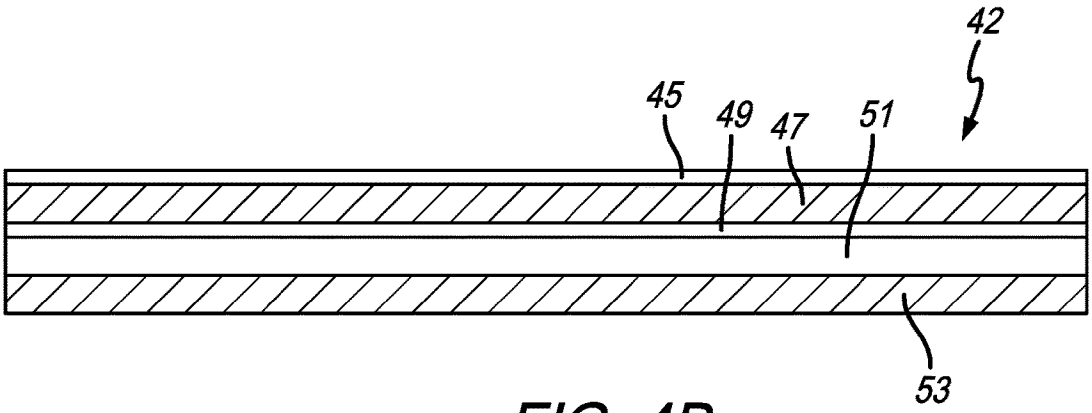

FIG. 4B

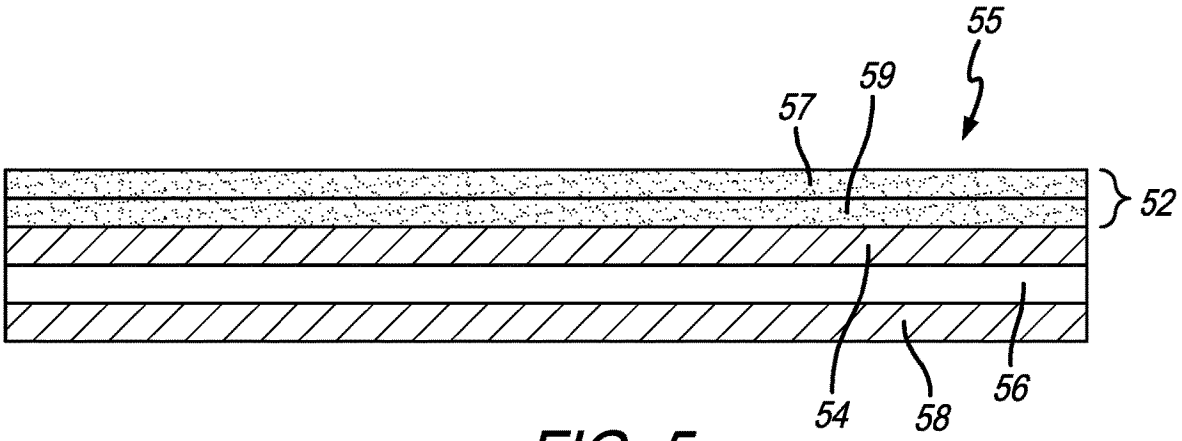

FIG. 5

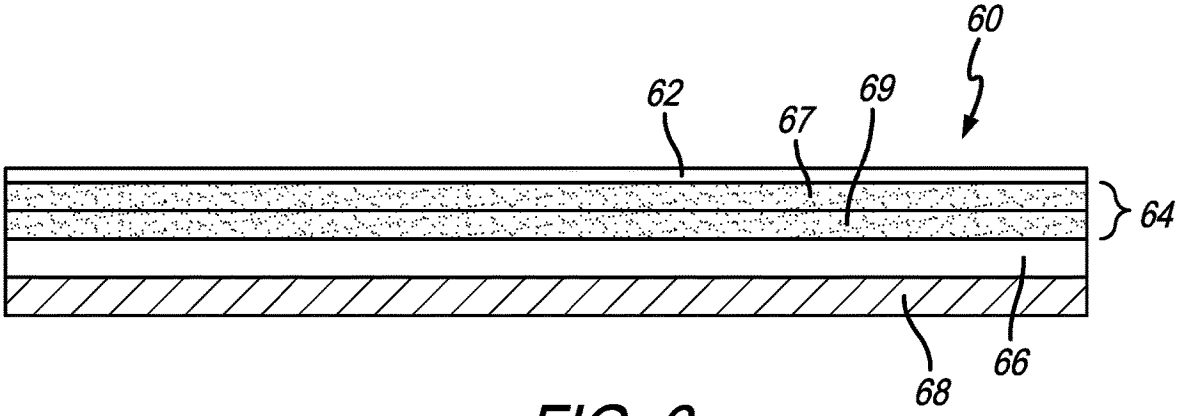

FIG. 6

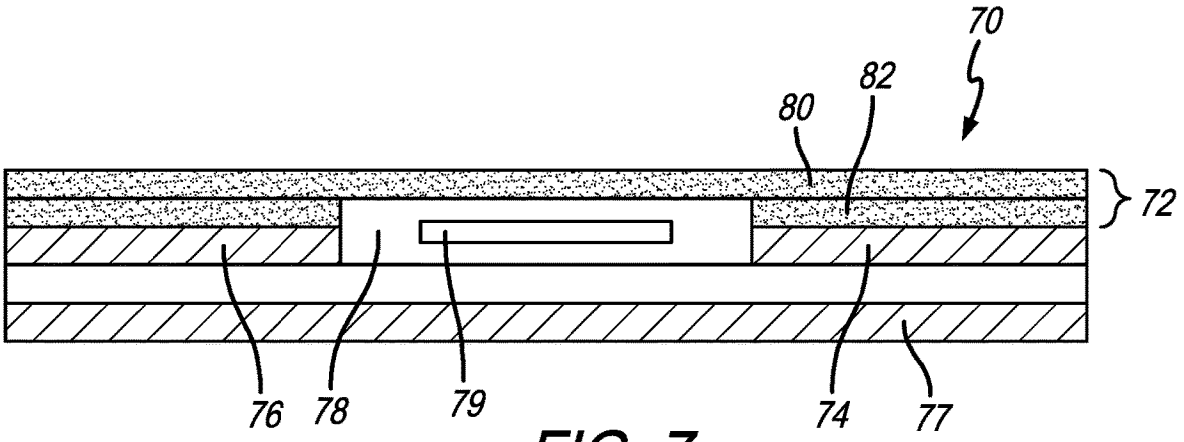

FIG. 7

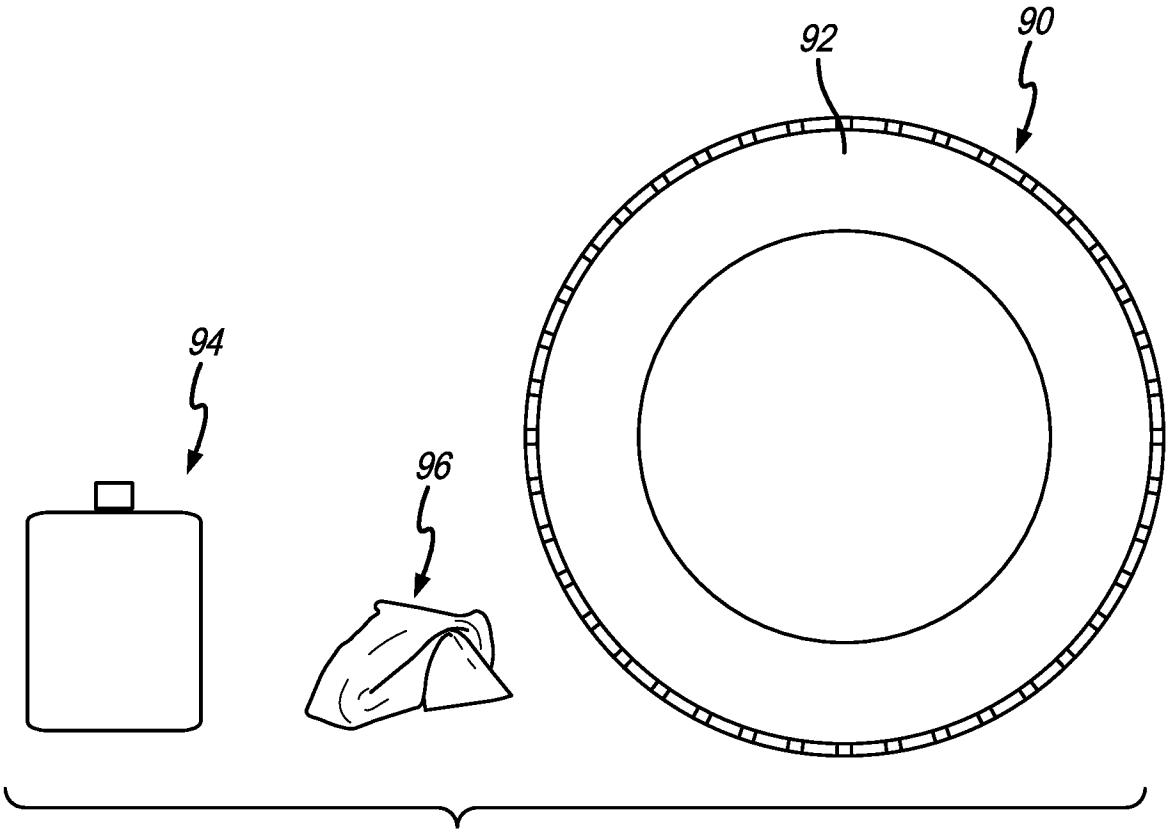

FIG. 8A

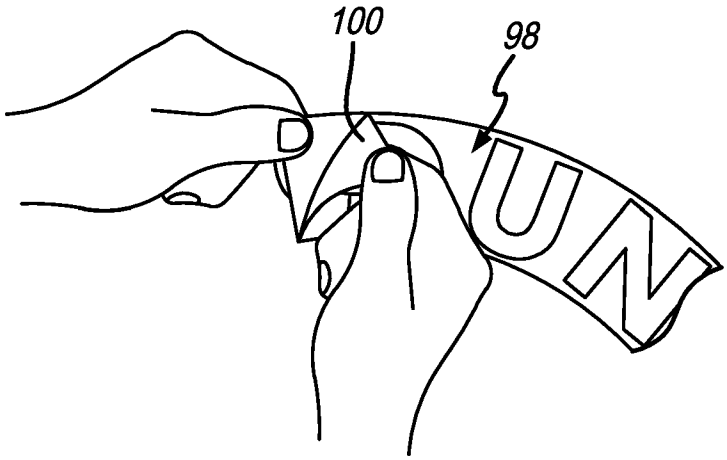

FIG. 8B

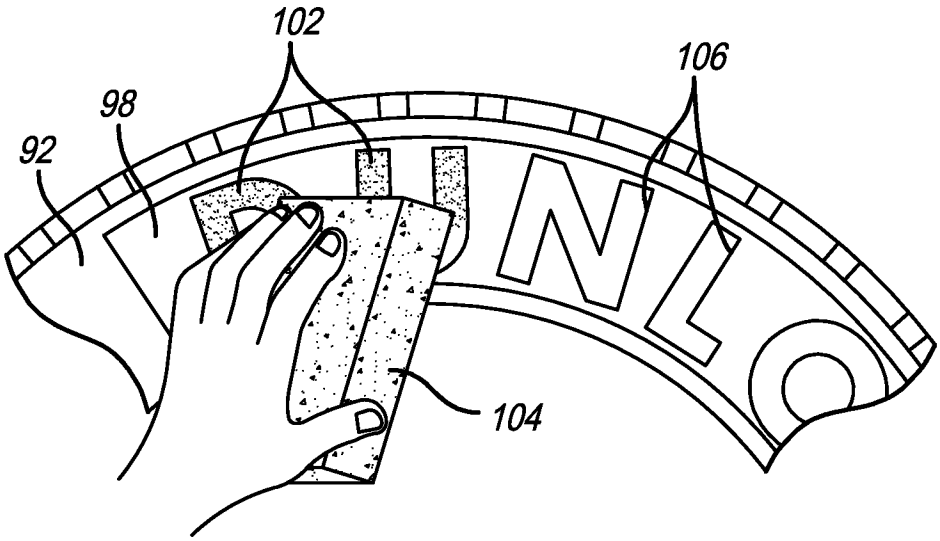

FIG. 8C

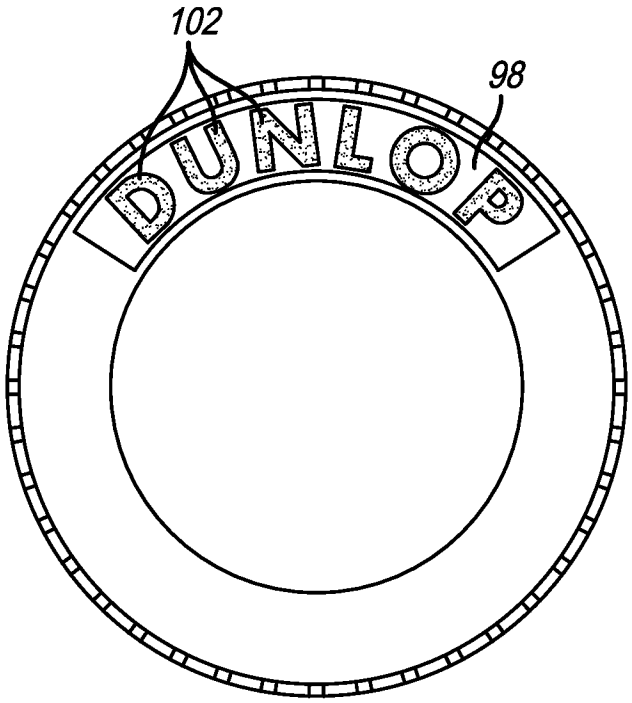

FIG. 8D

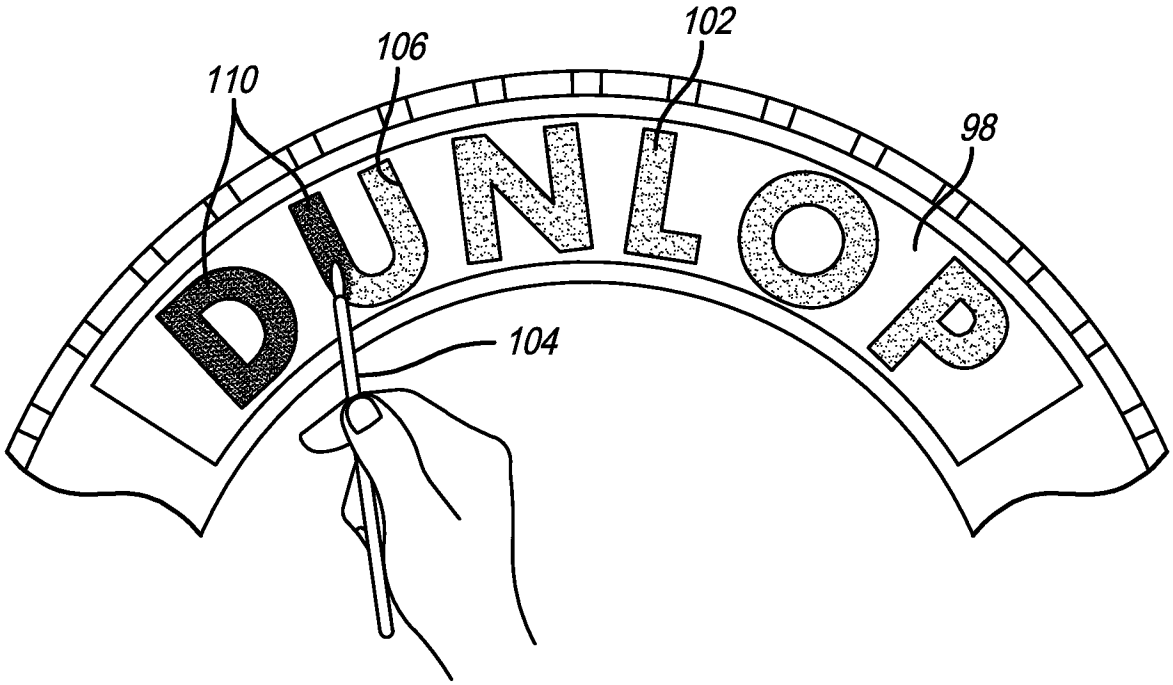

FIG. 8E

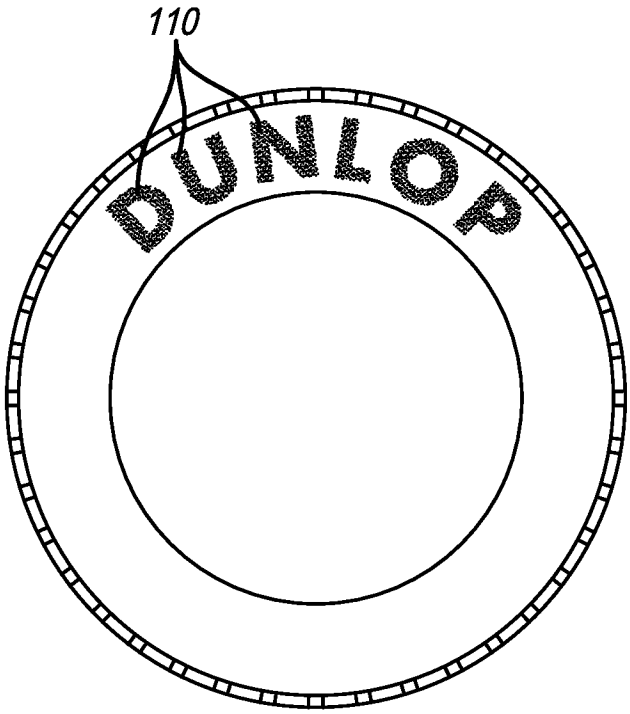

FIG. 8F

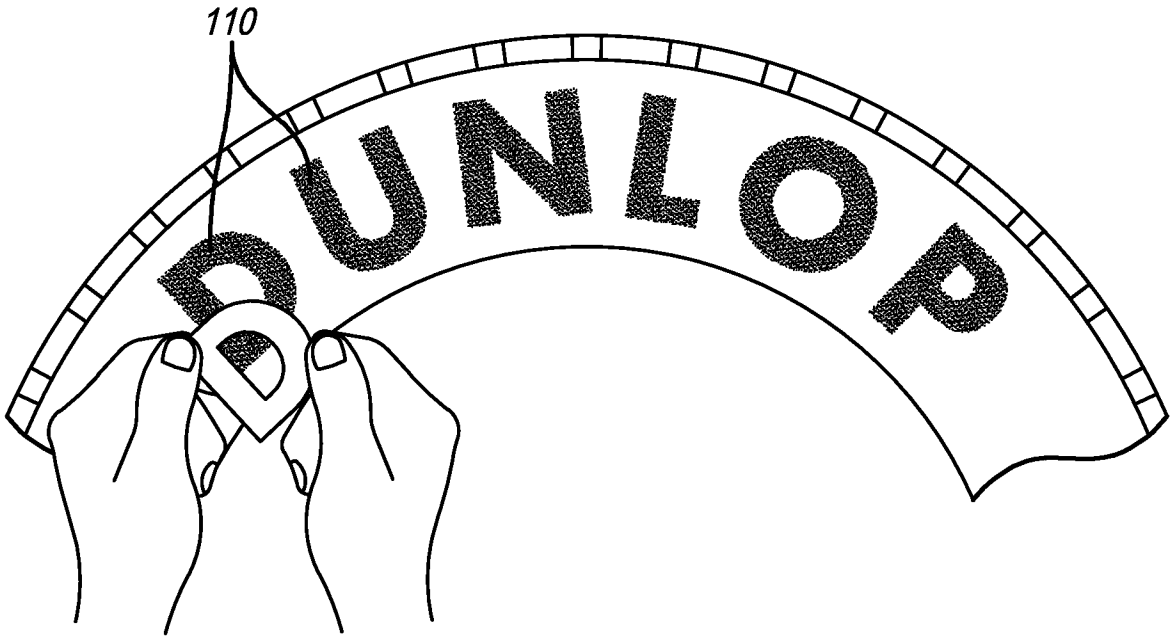

FIG. 8G

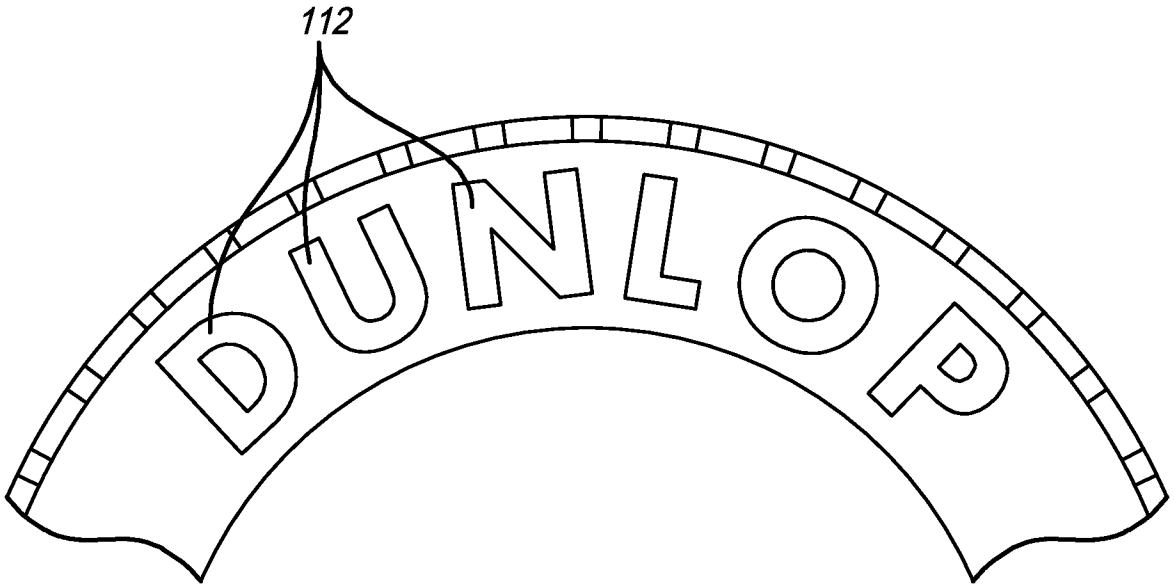

FIG. 8H

DISPLAY ASSEMBLIES AND METHODS FOR APPLYING THE SAME TO VULCANIZED RUBBER ARTICLES

CROSS-REFERENCE TO RELATED APPLICATIONS

This patent application is a continuation of U.S. patent application Ser. No. 15/139,272 filed Apr. 26, 2016, now U.S. Pat. No. 10,137,741, which claims the benefit of U.S. Provisional Patent Application No. 62/153,441, filed on Apr. 27, 2015, which applications are herein incorporated by reference in their entirety.

FIELD

This disclosure relates to display assemblies and methods for applying the same to a vulcanized rubber article.

BACKGROUND

The use of decals or the like for use on vulcanized rubber articles such as a sidewall portion of a tire or the like is somewhat known in the art, e.g., in the form of lettering and/or designs, for the purpose of adding features of aesthetic appearance, branding or the like to the vulcanized article containing the same. Such decals known in the art adapted for such uses are constructed in a manner that is either intended for temporary rather than permanent service, and/or that is adapted for application at a point of manufacture of the vulcanized articles. For example, traditional techniques for establishing tire sidewall markings involve extrusion or molding of black rubber and often the addition of colored inks which are cured in parallel with the tire during the vulcanization process. This process, though well established and scaled for industry, requires significant investment in materials, equipment and labor along with sizable wastage costs resulting from voids, blemishes and other defective designs. In addition, this technique is extremely limiting in terms of customizable designs due to molds and dies required to achieve the desired variations, and thus the availability of this customization to individual consumers and even customers internal to the industry is extremely limited.

It is, therefore, desired that display assemblies for use with a vulcanized article be constructed in a manner that permits not only variation in the nature of the display itself, e.g., the nature of the indicia be it one or a combination of characters, designs, emblems, and combinations thereof and the like, but variation in the method of applying the same so as to facilitate application as part of or subsequent to the manufacture of the vulcanized article. It is further desired that such display assembly be constructed in a manner that facilitates use of the same once applied for a long duration, e.g., the life of the vulcanized article. It is still further desired that such display assembly be constructed in a manner so as to facilitate such long-term without sacrificing the integrity and aesthetic appearance of the display assembly.

SUMMARY

Display assemblies as disclosed herein are specially constructed for attachment with a vulcanized rubber article to provide a desired display indicia, which may be a visual display or a feature that is visually or otherwise detectable. Display assemblies as disclosed herein generally comprise a composite of different material layers specially engineered to provide a desired display indicia in a manner that will last a long time on the vulcanized rubber article. Display assemblies comprise one or more display layers of elastomeric material configured to provide a desired display indicia, an intermediate layer formed from an elastomeric material different from that of the one or more display layers, and an adhesive layer, wherein the intermediate layer is interposed between the adhesive layer and the one or more display layers.

In an example, the adhesive layer is formed from a material forming a chemical bonding between the display assembly and the surface of the vulcanized rubber article. The display assembly may comprise two display layers, wherein one display layer may be disposed beneath another display layer, and wherein the display layers may each be of a different color and/or be patterned or otherwise configured so as to provide a desired display indicia by interaction of the two. An intermediate adhesive layer may be interposed between one or more display layers and the intermediate layer. If desired, a transparent protective layer may be disposed over the one or more display layers, forming an outermost surface of the display assembly. The display assembly may comprise a cavity disposed therein that may include an element disposed therein.

Display assemblies as disclosed herein may be attached to the surface of a vulcanized article by applying an adhesive material to form the adhesive layer, wherein the adhesive layer may be applied to one or both of the surface of the vulcanized article and an underlying surface of the display assembly, and placing a display assembly into contact with the surface of the vulcanized rubber article to form a bond between the display assembly and surface. In an example, a stencil may be used to ensure placement of the display assembly in a desired arrangement, or a transfer carrier may be used to provide the display assembly in the desired arrangement for placement onto the surface.

Display assemblies as disclosed herein are constructed provide flexibility in the nature of the display indicia itself, and variation in the method of applying the same so as to facilitate application as part of or subsequent to the manufacture of the vulcanized article. Also, display assemblies as disclosed herein are constructed in a manner that facilitates use of the same once applied for a long duration, e.g., the life of the vulcanized article, without sacrificing the integrity and/or aesthetic appearance of the display assembly.

BRIEF DESCRIPTION OF THE DRAWINGS

These and other features and advantages of display assemblies and methods for making the same as disclosed herein will be appreciated as the same becomes better understood by reference to the following detailed description when considered in connection with the accompanying drawings wherein:

FIG. **1** is a perspective view of an example display assembly as disclosed herein as attached to a vulcanized article in the form of a tire sidewall;

FIG. **2** is a cross-sectional side view of a single display layer embodiment three-layer assembly '**20**' as disclosed herein, wherein layer '**22**' is defined as the outermost aesthetic layer which is vulcanized for a permanent bond along underside surface '**28**' to a shock absorbing barrier layer '**24**' layered with an adhesive layer '**26**' for permanently bonding to the vulcanized rubber article;

FIG. **3** is a cross-sectional side view of a second example display assembly as disclosed herein, wherein a double display layer embodiment comprises a four-layer assembly

'30' having a first display layer '31' as the outermost aesthetic display layer which is vulcanized for a permanent bond to a second display layer '33' which is further vulcanized to a shock absorbing barrier layer '36' layered with an adhesive layer '38' for permanently bonding to the vulcanized rubber article;

FIG. 4A is a cross-sectional side view of a third example display assembly as disclosed herein comprising a single display layer with double layer adhesive and barrier four-layer assembly '40' having layer '48' as the outermost aesthetic display layer which is bonded with a shock absorbing barrier layer '44' using a permanent adhesive layer '50' and the barrier layer '44' is layered with another adhesive layer '46' for permanently bonding to the vulcanized rubber article;

FIG. 4B is a cross-sectional side view of an alternative third example display assembly as disclosed herein comprising dual display layers with double layer adhesive and barrier-five layer assembly '42' having layer '45' as the outermost display layer which is bonded with a second or intermediate display layer '49' using an intermediate adhesive layer '47' and the intermediate display layer is bonded with a shock absorbing barrier layer '51' that is layered with another adhesive layer '53' for permanently bonding to the vulcanized rubber article;

FIG. 5 is a cross sectional side view of a fourth example display assembly as disclosed herein comprising a double display layer '52' embodiment five-layer assembly '55' having layer '57' as the outermost aesthetic display layer which is vulcanized for a permanent bond to a second display layer '59' which is bonded with a shock absorbing layer '56' using a permanent adhesive layer '54' and the barrier layer '56' is layered with another adhesive layer '58' for permanently bonding to the vulcanized rubber article;

FIG. 6 is a cross section side view of a fifth example display assembly as disclosed herein comprising a double display layer '64' four-layer embodiment assembly '60' having layer '62' as a protective over-laminate layer disposed over all or a portion of the display layer(s) '67' and '69' vulcanized to a shock absorbing barrier layer '66' and layered with a permanent adhesive layer '68' for bonding to the vulcanized rubber article;

FIG. 7 is a cross section side view of a fifth example display assembly as disclosed herein comprising a multiple layer assembly '70' with cavity '78' having an embedded functional element '79' within the construction of the assembly, wherein the assembly '70' comprises a double display layer '72' with aesthetic layers 80 and 82 which also serve as perimeter layers to the cavity '78', wherein the display layers are vulcanized and bonded to a barrier layer '76' with a permanent adhesive layer '74' and having another layer of permanent adhesive '77' for bonding to the vulcanized rubber article; and

FIGS. 8A to 8H are schematic views of different steps of an example method for attaching a display assembly as disclosed herein to sidewall of a vulcanized rubber article in the form of a tire.

DETAILED DESCRIPTION

Display assemblies or constructions as disclosed herein are specially engineered to facilitate attachment to a vulcanized article, which may include but is not limited to tires, mud flaps, or any other member or element that is vulcanized or made from vulcanized rubber. Display assemblies as disclosed herein are provide for the purpose of providing a desired aesthetic appearance, product identification, tracking, branding, advertising, to provide a desired functional aspect to the vulcanized article, and the like to such vulcanized article. In an example, display assemblies as disclosed herein may comprise one or more elastomeric display layers providing the desired display image or function, an intermediate or barrier layer formed of an elastomeric material, and a layer of curable adhesive that is formed from a material capable of forming a strong adhesion bond with a surface of the vulcanized article. The display assemblies as disclosed herein may optionally comprise an adhesive layer interposed between the display layer and one or more of the barrier layers, and may comprise various combinations of one or more display layers, one or more intermediate or barrier layers, and one or more adhesive layers as called for by the specific end use application. Further, display assemblies as disclosed herein may optionally comprise an overcoat or transparent protective layer disposed over the display layer.

FIG. 1 illustrates an example display assembly or construction 10 as disclosed herein as attached to a vulcanized article 12. Display assemblies as disclosed herein can be used with a variety of differently configured vulcanized articles, wherein a unifying feature of such articles or attachment substrates is that they are formed from or have an outer surface comprising vulcanized rubber. In an example, the vulcanized article may be a rubber tire, wherein the display assembly is configured to be adhered to a portion of the rubber tire. In an example, the portion of the rubber tire may be a sidewall 14 of the tire. While a particular configuration or type of vulcanized article, and a particular portion of such article, has been described as being useful as the article or substrate for adhering display assemblies as disclosed herein thereto, it is to be understood that the use of display assemblies as disclosed herein is not to be limited to such types of vulcanized articles and/or portion of the same, and such is provided for purpose of example and reference.

The display assembly 10 is provided in a desired form or configuration depending on the desired display indicia or function intended, which can be in the form of a letter, numeral, symbol, design, pattern, logo, insignia, or the like that may be continuous or non-continuous in form depending on the particular end-use application. For example, the display assembly 10 can be configured in the shape of a letter and a number of the display assemblies can be used alone or in conjunction with one or more other display assemblies that may be continuous with one another or separate from one another to provide a desired word, term, brand, logo, message, symbol, function or the like on a surface of the desired vulcanized article. For example, the display assembly 10 can be configured as a continuous member that is disposed along an entire portion of the vulcanized article, e.g., such as a sidewall stripe or other form of continuous indicia, or only along a partial designated portion of the vulcanized article.

In an example, each such display assembly 10 comprises one or more display layers that provide an outer surface of the display assembly that operates to visually provide the display image or indicia or function. The one or more display layers may be formed from an elastomeric material and may be configured to provide a desired display image or indicia on the outer surface of the display assembly 10. In an example, the display layer may be constructed to have a desired color and/or pattern, and or shape, and/or texture useful to provide a desired display image or indicia or function. In an example, the display layer may be configured and/or colored and/or patterned to produce a desired display

image or indicia or function in conjunction with an underlying barrier layer. For example, the display layer may comprise one or more openings, e.g., a pattern of openings, and be of one color, and an underlying barrier layer may be of another color making it viewable through the display layer openings to provide the desired display image or indicia effect or function on the outer surface of the display assembly. In the event that two or more display layers are used, the different display layers may be configured and/or colored and/or textured, and/or patterned differently for the purpose of being combined together to provide the overall desired display image or indicia on the outer surface of the display assembly.

In an example, each display layer may be configured having a generally similar shape, e.g., in the shape of a letter, object, or numeral, wherein one of the display layers is provided in one color and another of the display layers is provided in a different color, and wherein the display layers are sized differently, so when combined together they operate to provide a desired visual display effect. In an example, an upper display layer may be provided having a white color and a lower display layer beneath the upper display layer may be provided having a black color, wherein the lower display layer is sized somewhat larger than the upper display layer so as to enhance the visual effect provided by the combined display layers.

Alternatively, the display layer may be provided in the form of a single layer that is patterned or that has a desired cut-out segment, and the desired display image is provided by contrast with an underlying other layer of the display assembly, e.g., which may be another display layer or a barrier layer. For example, the use of a patterned display layer in one color disposed on top of an underlying display layer or barrier layer of another color may operate to provide a desired indicia, e.g., that may be in the form of a barcode or the like used to provide an identification or other type of purpose or function.

The display assembly **10** is adhered to or otherwise attached to a surface of the desired vulcanized article **12**. In an example, the display assembly is adhered to the vulcanized article in a manner as better described below that produces a strong and lasting attachment therewith, e.g., to facilitate attachment of the display assembly to the vulcanized article for a long period of time which may be the service life of the vulcanized article. In an example, the display article is chemically bonded with the vulcanized article. In an example, the display assembly may be configured to match the contour or other surface geometry or surface feature of the vulcanized article that it is to be used with. For example, in the event that the vulcanized article is a side wall surface of a rubber tire, display assemblies as disclosed here may be configured to match the contour of the side wall surface to promote a desired optimal fit therewith when attached thereto.

FIG. **2** illustrates a first example display assembly **20** as disclosed herein comprising, moving from a surface portion of the display assembly **20** to a portion attached to a vulcanized rubber article, a display layer **22**, an intermediate or barrier layer **24**, and an adhesive layer **26**. As noted above, the display assembly **20** is configured having a shape and size as desired for a particular end-use application. In an example, the display layer **22** is provided in the form of a single layer of elastomeric material that may be colored, and/or patterned, and/or textured as desired to provide a desired display image or indicia viewable on the outer surface of the display assembly **20**. In an example embodiment, elastomeric materials useful for forming the display layer **22** include and are not limited to vulcanized rubber, natural rubber, SBR, nitrile rubber, neoprene rubber, rubber based or elastomeric ink having properties of aesthetic appeal of functional use, high elongation, UV and chemical resistance and abrasion resistance, and combinations thereof. In an example, depending on the particular size and configuration of the display assembly **20**, the display layer **22** may have a thickness greater than about 0.01 mm, of from about 0.01 to 10 mm, 0.05 to 5 mm, 0.1 to 3 mm, and in a particular example about 0.4 mm.

In an example, the intermediate or barrier layer **24** is attached or adhered along an underside surface **28** of the display layer **22**. In an example, the intermediate layer **24** extends along and covers the entire underside surface **28** of the display layer. Alternatively, the intermediate layer **24** may extend along a partial portion of the display layer underside surface **28**, which is less than the entire portion and more than a majority or 51 percent of the total area of the display layer underside surface **28**. In an example, the intermediate or barrier layer **24** is formed from a material capable of providing properties of shock absorbance, elastomeric expansion and/or contraction properties compatible with the vulcanized rubber article that the display assembly is to be attached therewith, and a desired degree of conformity between the adjacent surfaces of the display layer and the outer surface of a vulcanized rubber article (so as to maximize the surface contact area between the display assemble and vulcanized rubber article). Further, in the example illustrated in FIG. **1**, it is desired that the intermediate layer **24** be formed from a material capable of being chemically bonded to or vulcanized with the display layer **22**.

It is also desired that the intermediate or barrier layer **24** be formed from a material capable of acting as a barrier to minimize or prevent the migration of any unwanted constituents of the adhesive layer **26** and/or the vulcanized rubber article may otherwise operate to damage or degrade the design image and/or feature provided by the display layer **22**. In an example, the intermediate layer is formed from an elastomeric material. Elastomeric materials useful for forming the intermediate layer **24** include and are not limited to gum rubber, vulcanized natural rubber SBR, nitrile rubber, polyurethane, or comparable materials having properties of high elongation, conformity and chemical resistance to notable mold release agents common in the vulcanized rubber of pneumatic tires, and combinations thereof. In an example, depending on the particular size and configuration of the display assembly **20**, it is desired that the intermediate layer **24** thickness be that which is sufficient to enable the intermediate layer to function in the above-described manner. The exact thickness of the intermediate layer is understood to vary depending on the particular type of material selected for the intermediate layer as well as the particular end-use application. In an example, the intermediate layer **24** may have a thickness greater than about 0.008 mm, from about 0.008 to 10 mm, about 0.01 to 5 mm, about 0.1 mm to 1.5 mm, and in a particular example of about 0.5 mm.

It is desired that the adhesive layer **26** be formed from a material capable of forming a chemically, heat-activated or otherwise permanent bonded attachment with the vulcanized rubber article. In an example, it is desired that the attachment be one having a service life that is the same as the vulcanized rubber article so as to provide a permanent attachment therewith to permit the display assembly to function throughout the service life of the vulcanized article. The particular type of material used for the adhesive layer may

vary depending on the particular display assembly application environment, e.g., in a manufacturing environment of where the vulcanized article is being made, or in a consumer environment subsequent to the manufacture of the vulcanized article. In an example, embodiment, such as one where the display assembly is being attached to the vulcanized rubber article at the point of the vulcanized rubber article being manufactured, the adhesive layer may be formed from a material capable of forming the desired chemical bond or being vulcanized thereto under elevated temperature conditions, e.g., heat-activated adhesives. Such materials include but are not limited to thermoplastic and thermoset adhesives, heat vulcanizing cements common in retread applications, water-based or solvent based polymer polyurethane based adhesives, and combinations thereof. Such application may also call for some degree of elevated pressure being applied to the display assembly during adherence by the adhesive layer. In an example, such elevated pressure may be in the range of from about 3 to 100 Psi.

In an example, embodiment, such as one where the display assembly is being attached to the vulcanized rubber article by a consumer or the like at a point subsequent to the manufacture of the vulcanized rubber article, the adhesive layer may be formed from a material capable of forming the desired chemical bond or being vulcanized thereto ambient temperature conditions, e.g., by chemical reaction instead of being heat activated. Such materials include but are not limited to chemical cements common in retread applications, cyanoacrylate, epoxies, rubber-based acrylic pressure sensitive adhesives and combinations thereof. Such application may also call for some degree of elevated pressure being applied to the display assembly during adherence by the adhesive layer. In an example, such elevated pressure may be in the range of from about 3 to 10 Psi.

In an example, depending on the particular size and configuration of the display assembly **20**, it is desired that the adhesive layer **26** thickness be that which is sufficient to enable the adhesive layer to function in the above-described manner. The exact thickness of the adhesive layer is understood to vary depending on the particular type of material selected for the adhesive layer as well as the particular end-use application. In an example, the adhesive layer **26** may have a thickness greater than about 0.006 mm, from about 0.006 mm to 0.5 mm, 0.01 mm to 0.3 mm, 0.02 mm to 0.1 mm, and in a particular example of about 0.04 mm.

In an example, the display assembly described above and illustrated in FIG. **2** may be made by joining the display layer and intermediate layer together and then subjecting the same to vulcanizing conditions of elevated temperature and/or pressure, after which time the adhesive layer may be combined therewith, e.g., at the point of applying the display assembly. While the example display assembly illustrated in FIG. **2** has been disclosed as comprising three separate and distinct layers, it is to be understood one or both of the display layer or the adhesive layer may be configured so as to include a barrier composition at an interface therebetween that may operate to provide the barrier properties noted above, thereby avoiding the need use three separate and distinct layers for the display assembly.

FIG. **3** illustrates a second example display assembly **30** as disclosed herein comprising, moving from a surface portion of the display assembly **30** to a portion attached to a vulcanized rubber article, a display layer **32**, an intermediate or barrier layer **36**, and an adhesive layer **38**. Unlike the example illustrated in FIG. **2** and described above, the display layer **32** in this example is made up of two or more different display layers, e.g., a first or upper display layer **31** and a second or lower display layer **33**.

In this embodiment, each display layer may be sized, shaped, patterned, colored and/or textured differently from the other to provide a desired display indicia when combined together. For example, the first display layer **31** may be white in color and have a particular size, wherein the second display layer **33** may be black in color and be sized slightly larger than the first display layer for purpose of providing a desired display visual indicia. This is but one example of how the different display layers **31** and **33** can be used with one another to provide a desired display indicia. In another example, as noted above, the first display layer may be of one color and have one or more openings cut into it, and the second display layer is of another color so such color is displayed through the openings to provide a desired visual indicia on the surface of the display assembly. These are but a few examples of how the first and second display layers can be used to provide a desired display indicia for purpose of example and reference, and it is to be understood that all such variations are to be within the scope of the display assemblies as disclosed herein. Also, while an example comprising two display layers has been disclosed, it is to be understood that display assemblies as disclosed herein may comprise more than two display layers depending on the particular display indicia desired for the particular end use application.

The display layers **31** and **33**, as well as the intermediate layer **36** and adhesive layer **38** may each be formed from the same types of respective materials described above for the earlier examples. In an example, the display layers **31** and **33** may have the same thickness as described above, so that the overall thickness of the display layer **32** is generally greater than that of the earlier described examples. However, the thickness of the display layer **32** may also be less than or equal to the thickness of earlier described examples so as to meet the requirements of a particular function or aesthetic desire. As noted above for the example display assembly of FIG. **2**, the example display assembly illustrated in FIG. **3** may alternatively comprise a display layer or adhesive layer configured having a barrier composition at an interface, so as to avoid the need to obtain desired barrier properties through a separate and distinct barrier layer.

In an example, the display assembly described above and illustrated in FIG. **3** may be made by joining the display layers, and intermediate layer together and then subjecting the same to vulcanizing conditions of elevated temperature and/or pressure, after which time the adhesive layer may be combined therewith, e.g., at the point of applying the display assembly.

FIG. **4**A illustrates a third example display assembly **40** as disclosed herein comprising, moving from a surface portion of the display assembly **40** to a portion attached to a vulcanized rubber article, a display layer **48**, an intermediate adhesive layer **50**, an intermediate or barrier layer **44**, and an adhesive layer **46**. The principle difference between this second example display assembly **40** and that disclosed above and illustrated in FIG. **2** is the presence and use of an intermediate adhesive layer **50** interposed between the display layer **48** and the intermediate or barrier layer **44**. The presence of such an intermediate adhesive layer **50** in this second example operates to provide a greater degree of adhesion between the display layer **48** and the intermediate layer **44**, and may also operate to provide and extra degree of barrier protection against the migration of any unwanted

constituents from the intermediate layer **44**, adhesive layer **46**, and/or the vulcanized rubber article that the display assembly is attached to.

The materials used in this second example for the display layer **48**, intermediate layer **44**, and adhesive layer **46** may be selected from the same types of materials described above for the first two examples. The thicknesses of the display layer **48**, intermediate layer **44**, and adhesive layer **46** may also be the same as that described above for the first two examples.

The intermediate adhesive layer **50** is formed from a material capable of forming a bonded attachment between and underside surface of the display layer **48** and a surface of the intermediate barrier layer **44**, and optionally acting as a barrier to minimize or prevent the migration of any unwanted constituents into the display layer **48**. In an example, the intermediate adhesive layer **50** is formed from a thermoset adhesive. Thermoset adhesives useful for forming the intermediate adhesive layer **50** include and are not limited to heat vulcanizing cements common in retread applications, water-based or solvent based polymer polyurethane based adhesives, epoxies and combinations thereof. In an example, depending on the particular size and configuration of the display assembly **40**, it is desired that the intermediate adhesive layer **50** thickness be that which is sufficient to enable the intermediate adhesive layer to function in the above-described manner. The exact thickness of the intermediate adhesive layer is understood to vary depending on the particular type of material selected for the display layer and the intermediate layer as well as the particular end-use application. In an example, the intermediate adhesive layer **50** may have a thickness greater than about 0.006 mm, of from about 0.006 mm to 0.5 mm, about 0.01 mm to 0.3 mm, and in a particular example about 0.025 mm.

In an example, the display assembly described above and illustrated in FIG. **4** may be made by joining the display layer, the intermediate adhesive layer, and intermediate layer together and then subjecting the same to vulcanizing conditions of elevated temperature and/or pressure, after which time the adhesive layer may be combined therewith, e.g., at the point of applying the display assembly. While the example display assembly illustrated in FIG. **4**A has been disclosed as comprising four separate and distinct layers, it is to be understood that one or more of the display layer, intermediate adhesive layer, barrier layer, or the adhesive layer may be configured as a composite having properties of another layer so as to reduce the total number of separate and distinct layers used for making the display assembly **40**. For example, the intermediate adhesive layer may be configured having a barrier composition along an interface with the adhesive layer, thereby avoiding the need to use a separate and distinct barrier layer, or the barrier layer may be configured comprising an adhesive composition on or both of its surfaces so as to avoid having to use one or more separate adhesive layers. These are just a few examples of how composite compositions may be used in such multilayer display assemblies to reduce the total number of separate and distinct materials layers used while still providing all of the desired described properties.

FIG. **4**B illustrates an example display assembly **42** that is somewhat similar to that illustrated in FIG. **4**A, in that it comprises a display layer **45** on a top surface, an intermediate adhesive layer **47** below the display layer. However, in this particular example, the display assembly **42** includes a second or intermediate display layer **49** that is interposed between the intermediate adhesive layer **47** and the barrier layer **51**, and like in the third example an adhesive layer **53** is disposed beneath the barrier layer. A feature of such construction is the ability to configure the uppermost display layer **45**, e.g., shape, size and/or patterning of openings or the like to reveal at least a portion of the intermediate display layer **49** to provide the desired display indicia. Also, in such an example, a sub assembly made up of the adhesive layer **53**, barrier layer **51**, and intermediate display layer **49** may be made and combined in the manner noted above and adhered to the desired substrate portion, e.g., a vulcanized rubber article. After such sub assembly has been attached to the desired substrate, then the uppermost display layer **45** may be attached thereto through the use of the intermediate adhesive layer **47**. The ability to construct the display assembly in this manner, through the use of a sub assembly and later applied display layer adds flexibility in being able to provide the desired display layer after a portion of the assembly has already been installed on the substrate. It also allows for the subassembly to be manufactured and kept in stock as the standard subassembly for a variety of different types of upper most display layers. An example of such a display assembly may include white walls, red walls, or other colored walls or other desired type of indicia that may now be selected and applied after the standard stock subassembly has been attached to the substrate.

FIG. **5** illustrates a fourth example display assembly **55** as disclosed herein comprising, moving from a surface portion of the display assembly **55** to a portion attached to a vulcanized article, a display layer **52**, an intermediate adhesive layer **54**, an intermediate barrier layer **56**, and an adhesive layer **58**. Like the example illustrated in FIG. **3** and described above, the display layer **52** in this example is made up of two or more different display layers, e.g., a first or upper display layer **57** and a second or lower display layer **59**. Like the example illustrated in FIG. **4**A and described above, the display assembly **50** comprises an intermediate adhesive layer **54** that is interposed between the display layer **52** and the intermediate barrier layer **56**.

The intermediate adhesive layer **54** operates in the same manner as described above for the example illustrated in FIG. **4**A, to provide a greater degree of adhesion between the display layer **52** and the intermediate barrier layer **52**, and may be formed from the same materials and have the same layer thickness as that described above for the example illustrated in FIG. **4**A.

In an example, the display assembly **50** may be made by joining the display layer, the intermediate adhesive layer, and intermediate layer together and then subjecting the same to vulcanizing conditions of elevated temperature and/or pressure, after which time the adhesive layer may be combined therewith, e.g., at the point of applying the display assembly.

FIG. **6** illustrates a fifth example display assembly **60** as disclosed herein comprising, moving from a surface portion of the display assembly **60** to a portion attached to a vulcanized article, protective layer **62**, a display layer **64** (comprising an upper display layer **67** and a lower display layer **69**), an intermediate barrier layer **66**, and an adhesive layer **58**. A feature of this example is the presence of a protective layer **62** that is disposed over the display layer, wherein the protective layer is formed from an optically transparent material and may be used to enhance and/or protect the display layer from external elements that may damage or otherwise degrade the indicia provided by the display layer, thereby enhancing the service life of the display assembly. While the protective layer has been disclosed in the context of being used with the particular

display assembly construction as illustrated in FIG. **6**, it is to be understood that the protective layer may be used with any and all of the display assemblies as disclosed herein.

In an example, the protective layer may cover the entire surface of the underlying display layer, or display layers in the event the display assembly comprises more than one display layer, or a partial portion of the display layer depending on the particular display indicia and/or the particular end-use application. Materials useful for forming the protective layer are preferably elastomeric, e.g., having the same degree of flexibility or elasticity as that of the underlying display layer, and may be selected from materials including and not limited to polyurethane, vinyl, polyethylene terephthalate, rubber-based elastomeric inks, and combinations thereof. In an example, depending on the particular size and configuration of the display assembly, it is desired that the protective layer thickness be that which is sufficient to enable the protective layer to function in the above-described manner. The exact thickness of the protective layer is understood to vary depending on the particular type of material selected for the protective layer as well as the particular end-use application. In an example, the protective layer may have a thickness greater than about 0.006 mm, of from about 0.006 mm to 0.3 mm, about 0.01 mm to 0.2 mm, and in a particular example about 0.025 mm.

FIG. **7** illustrates a sixth example display assembly **70** as disclosed herein comprising, moving from a surface portion of the display assembly **70** to a portion attached to a vulcanized article, a display layer **72**, an intermediate adhesive layer **74**, an intermediate barrier layer **76**, and an adhesive layer **77**, wherein a cavity **78** is disposed within the assembly for the purpose of accommodating an element or object **79** therein. Like the example illustrated in FIG. **5** and described above, the display layer **72** in this example is made up of two or more different display layers, e.g., a first or upper display layer **80** and a second or lower display layer **82**.

A feature of this particular embodiment is the presence of a cavity **78** that is formed in the display assembly **70** for the purpose of accommodating placement of an element or object **79** therein. For purpose of reference, a display construction somewhat similar to that illustrated in FIG. **5** was used to disclose the cavity feature for purposes of reference and example, and it is to be understood that display assemblies as disclosed herein comprising cavities may be embodied having other display assembly constructions as disclosed herein.

In this example, the cavity is formed within the second display layer **82** and the intermediate adhesive layer **74** and is configured to accommodate a desired element or object therein, wherein such element or object may be any type of rigid or non-rigid element, passive or non-passive element, functional or nonfunctional element that may be useful for including in the display assembly. Examples of the types of objects or elements that may be disposed in the cavity include RFID elements, GPS elements, lighting elements such as LEDs or the like, and the like. In an example, the cavity is configured within the construction to provide an area capable of accommodating such an element or object without damaging the element or object, and without causing damage to the display assembly itself during use of the vulcanized rubber article that it is attached thereto. In the example illustrated in FIG. **7**, the cavity is positioned beneath the first display layer **80**, and if desired the first display layer may comprise one or more openings for the purpose of displaying a portion of the object or element disposed within the cavity. It is to be understood that display assemblies comprising a cavity as disclosed herein may include the cavity positioned differently, e.g., formed within one or more different assembly layers, than that illustrated in FIG. **7** depending on the particular display assembly, the particular configuration of the cavity, the particular element or object disposed within the cavity and its intended purpose and/or function, and/or the particular end-use application of the vulcanized article.

While the cavity feature of display assemblies has been disclosed with reference to particular examples and illustrations, it is to be understood that display assemblies as disclosed herein may be constructed with the cavity positioned other than as disclosed or illustrated. For example, the design assembly may be configured with the cavity deposed along an outer portion of the assembly, which may be a display layer, in which case an element disposed within the cavity would be viewable from outside of the display assembly. An example of such may be one where a light element is disposed within the cavity for purposes of providing illumination or an illuminated visual effect or the like outside of the display assembly that is viewable from outside of the vulcanized article. In such example, the cavity may be open and exposed to the external environment, or a layer of transparent material or the like may be optionally disposed thereover. This is but one example provided for the purpose of illustrating how the cavity may be positioned differently within the display assembly to enable a desired function or purpose.

While the display assemblies as disclosed herein have been referenced by example and illustration having certain features and/or characteristics, it is to be understood that display assemblies meeting the general construction parameters as disclosed herein and having additional elements are intended to be within the scope of display assemblies as covered herein. For example, while display assemblies may be configured to provide a desired display indicia or the like through the shape, design, configuration or the like of the one or more display layers, Display assemblies as disclosed herein may be configured to provide a desired display indicia through the use of printed, marked or other type of provided feature that may be included in or on the display layer. For example, the display assembly may comprise a desired display indicia provided in the form of an ink symbol, letter, or other marking feature or object that is disposed on or into the display layer, which symbol, letter, or other marking feature or object may be a brand, logo or the like.

Display assemblies as disclosed herein may have a different total thickness depending on the particular construction features within the display assembly. In an example, the display assembly may have a total thickness, as measured from a top surface of the display assembly (adjacent the display layer or protective layer) to a bottom surface (adjacent the adhesive layer) of greater than about 0.0025 mm, from about 0.0025 mm to 10 mm, from about 0.01 to 5 mm, about 0.1 to 3 mm, and in a particular example about 0.4 mm. It is to be understood that the exact thickness of the display assembly can and will vary depending on the particular display assembly construction and/or end-use application.

Display assemblies as disclosed herein may be constructed to accommodate different conditions for applying the display assembly to a desired vulcanized rubber article, e.g., to accommodate application during manufacturing of the vulcanized rubber article, or to accommodate application after the vulcanized rubber article has been made. In an example, display assemblies may be attached to a surface of

a vulcanized rubber article, e.g., a sidewall surface of a pneumatic tire, by reaction that may include and not be limited to heat and/or pressure and/or chemical bonding so as to provide a desired aesthetic appeal in the form of desired visual indicia, such as lettering and/or other objects or shapes or designs and/or functional use, such as with bar coding or RFID technology, capable of withstanding the tire manufacturer recommended life cycle. In an example, the element or object disposed within the cavity and affixed to the vulcanized article via the display assembly as disclosed herein may have compatibility programmable functionality, such as RFID read/write capability, circuit board/programmable system which can control a device such as a light element like an LED in a predetermined manner. Such functionality may be innate with the element disposed in the cavity or may be controlled by a separate component whether connected by wire or wirelessly, e.g., blue-tooth enabled, radio controlled or other frequency connection. In an example, the cavity may be configured within the display assembly to accommodate a light element there, such as one or more LEDs therein, so that the display assembly emits light that can be seen by a person looking at the vulcanized article. In an example, the light element may be controlled to provide a desired illumination.

FIGS. **8**A to **8**H illustrate different steps useful for applying the display assembly according to an example method of applying. Referring to FIG. **8**A, in an example method of applying, the intended or target surface **92** of the vulcanized rubber article **90** is cleaned so as to remove any dirt, oil, debris or other foreign agents or containments that could interfere with forming a desired attachment bond with the display assembly. A suitable cleaning solution **94** or preparation agent can be used for this purpose. In an example, such cleaning solution **94** can be selected from but not limited to the group of organic or inorganic solutions such as acetone or the like. In an example, the cleaning solution **94** can be applied and used to clean the surface by use of a fabric material **96** or the like. As illustrated in FIG. **8**C, in an example, it may be desired to further treat the surface **92** by roughening the surface through the use of an abrasive means **104** such as sand paper or the like until the surface displays a rough texture, and then cleaning the treated surface, e.g., with the cleaning solution, to ensure that it is free of any surface debris from the treatment process.

Referring to FIG. **8**B, in certain applications, it may be desired to use a stencil **98** or template for the purpose of properly/accurately locating the display assembly on the surface of the vulcanized rubber article. For example, in the case where a series of the display assemblies are to be applied to a sidewall surface of a tire to provide a desired string of letters, numerals and/or designs or the like, a stencil **98** or template may be used to ensure that the display assemblies are positioned at a proper spacing and/or at a proper location along the sidewall surface. The stencil **98** may be provided in the form of a semi-rigid material such as paper, plastic film or the like that can be applied to the target surface. As shown in FIG. **8**C, the stencil **98** can be removably attached to the target surface **92** or held in place by hand. Referring back to FIG. **8**B, in an example, the stencil **98** or template comprises a pressure sensitive adhesive backing and is prepared for adhered placement against the target surface by removing a carrier sheet **100** covering the adhesive and pressing the stencil into contact with the target surface **92** at the desired position to ensure an adequate bond, specifically around the cut out areas in the stencil (as best shown in FIG. **8**C). Referring to FIG. **8**C, in an example where a stencil **98** or template is used, the steps of treating the target surface **92** by sanding or the like and then cleaning the treated surface is preferably done after the stencil has been placed into position, thereby limiting the target surface area **102** being prepared to only that exposed by the cut out areas **106** of the stencil **98**. FIG. **8**D illustrates the target surface areas **102** of the sidewall as treated by sanding with the template **98** still in place.

Alternatively, instead of using a separate stencil for purposes of applying the display assembly in a desired arrangement, the displace assembly may be configured having a transfer carrier adhered to an upper most surface of the display assembly, wherein the display assembly is positioned on the transfer film in a desired arrangement for placement onto the target surface without the use of a stencil to provide the a visual display having the desired arrangement.

Referring to FIGS. **8**E and **8**F, a desired adhesive material **110**, selected from the materials described above, is applied to the treated surface **102** by suitable means, which can be by spray, roll, brush **104** or the like to form a desired thickness of the adhesive layer to receive the display assembly. In example where a stencil **98** is used, the adhesive **104** is applied to the cut out section or sections **106** and the template **98** is removed before the adhesive cures so as to avoid difficult template removal. FIG. **8**F illustrates the treated surfaces coated with adhesive material **110** after with the template removed, wherein the treated surfaces having the adhesive material is in the form of a series of letters. Alternatively, or in addition to the method of adhesive application disclosed above, the adhesive may be applied to the underside surface of the display assembly that is then applied to the target surface.

In an example, the adhesive material once applied to the target surface is allowed to dry for a predetermined period of time, which amount of time can and will vary depending in the particular type of adhesive material used. In an example, the adhesive material that is used is Heavy Duty Blue Vulcanizing Fluid by Tech International and it is allowed to dry for a period of approximately 20-30 minutes. Referring to FIGS. **8**G and **8**H, once the adhesive material **110** has dried for the determined time, the display assembly **112** is placed onto the adhesive material layer **110**. In an example, the display assembly **112** is pressed into contact with the adhesive layer and target surface by using a stitching tool, whereby moderate pressure is applied onto the display assembly by rolling the stitching tool over the entire surface area of the display assembly to ensure complete bonding and adherence between the display assembly and the vulcanized rubber article by the adhesive layer. FIG. H illustrates a number of the display assemblies **112** attached to respective target surfaces containing the adhesive material. In the example where a transfer carrier is used rather than the stencil, once the display assembly is applied to the target surface and bonded thereto, the transfer carrier is removed from the display assembly, having served its purpose to provide the display assembly in a desired form, configuration or arrangement on the target surface.

In an example, it is desired that the so-applied display assembly be allowed to cure for a predetermined amount of time before the vulcanized rubber article is placed into use. For example, when the article is a tire sidewall, it is desired that the display assembly be allowed to cure for at least 8 hours before a vehicle comprising the tire or tires are operated. In an example, ideally it is desired that the display assembly be allowed to cure for 24 hours before the vulcanized article in the form of tires are operated.

In another example method, display assemblies as disclosed herein may be applied to a desired vulcanized rubber article at the point of manufacture. In an example, wherein the vulcanized rubber article is a tire, display assemblies may be applied in a similar manner as disclosed above, with a difference being that the adhesive material may be provided in the form of a heat-activated material, in which case once the adhesive material is applied to the target surface heat is used to cause the display assembly to be adhered thereto. In such example, pressure may also be applied by suitable machinery as the adhesive material is curing to ensure a desired bonding occurs between the vulcanized rubber article and the display assembly.

While the display assemblies and method of applying the same as disclosed herein have been presented with respect to the described and illustrated embodiments, it is to be understood that the disclosure is not to be limited to those alternatives and described embodiments.

What is claimed is:

1. An assembly for attachment with a vulcanized rubber article comprising:

an outer layer of elastomeric material having a visual feature; and

an adhesive layer adhered to an interface surface of the outer layer, wherein at least a portion of the outer layer adjacent the interface surface comprises a barrier material composition, and wherein the adhesive layer is formed from a material capable of chemically bonding with a surface of a vulcanized rubber article.

2. The assembly as recited in claim **1** wherein the outer layer comprises a first layer and a second layer disposed beneath the first layer.

3. The assembly as recited in claim **2** wherein the first layer is colored differently from the second layer.

4. The assembly as recited in claim **1** further comprising an intermediate layer interposed between the outer layer and the adhesive layer.

5. The assembly as recited in claim **1** wherein the barrier material composition impairs migration of a material constituent within the assembly when the assembly is attached to a vulcanized rubber article.

6. The assembly as recited in claim **1** further comprising a protective layer disposed over the outer layer and forming an outermost surface of the assembly, the protective layer formed from an optically transparent material.

7. The assembly as recited in claim **1** further comprising a cavity disposed therein.

8. The assembly as recited in claim **7** further comprising an element disposed within the cavity.

9. The assembly as recited in claim **7** wherein the cavity is disposed beneath the outer layer.

10. The assembly as recited in claim **2** wherein the first layer includes one or more openings therethrough, and wherein the second layer is visible through the one or more openings.

11. A method for attaching an assembly to a surface of a vulcanized rubber article comprising the steps of;

identifying a surface of a vulcanized rubber article;

placing an assembly into contact with the identified surface, wherein the assembly comprises:

an outer layer of elastomeric material, wherein the outer layer is in contact with an adhesive layer interposed between the identified surface and the assembly that bonds the assembly to the vulcanized rubber article, and wherein the outer layer comprises a barrier material composition to mitigate migration of material from the vulcanized rubber article.

12. The method as recited in claim **11** further comprising preparing the identified surface before the step of placing.

13. The method as recited in claim **11** further comprising applying pressure to the assembly after the step of placing.

14. The method as recited in claim **11** wherein the vulcanized rubber article is tire, wherein the identified surface is a sidewall surface of the tire, and wherein the assembly includes a cavity disposed therein for accommodating placement of an element.

15. A vulcanized rubber tire comprising:

a target surface disposed along a portion of the rubber tire;

an assembly disposed onto the target surface and comprising:

an outer layer of elastomeric material; and

an adhesive layer connected with the outer layer;

wherein at least a portion of the outer layer comprises a barrier material composition to mitigate migration of material from the rubber tire.

16. The rubber tire as recited in claim **15** wherein the assembly further comprises a cavity disposed therein.

17. The rubber tire as recited in claim **16** wherein an element is disposed within the cavity.

18. The rubber tire as recited in claim **16** wherein the cavity is disposed beneath the outer layer.

19. An assembly for attachment to a vulcanized rubber tire comprising;

an outer layer formed from an elastomeric material;

an adhesive layer bonding the assembly to portion of a vulcanized rubber tire; and

a cavity disposed within the assembly for accommodating an element therein;

wherein the outer layer comprises a material composition that acts as a barrier to material migrating from the vulcanized rubber tire.

20. The assembly as recited in claim **19** wherein at least a portion of the cavity is disposed beneath the outer layer.

21. The assembly as recited in claim **19** wherein the adhesive layer is connected with the outer layer.

22. The assembly as recited in claim **19** wherein the outer layer includes an indicia along an outer surface.

23. The assembly as recited in claim **19** further comprising an intermediate layer disposed beneath the outer layer.

* * * * *

Exhibit E

US011835421B2

(12) **United States Patent**
Ferry

(10) **Patent No.: US 11,835,421 B2**
(45) **Date of Patent: *Dec. 5, 2023**

(54) **SENSOR ASSEMBLIES AND SYSTEMS FOR MONITORING A DYNAMIC OBJECT**

(71) Applicant: **Keith George Ferry**, Burbank, CA (US)

(72) Inventor: **Keith George Ferry**, Burbank, CA (US)

(*) Notice: Subject to any disclaimer, the term of this patent is extended or adjusted under 35 U.S.C. 154(b) by 219 days.

This patent is subject to a terminal disclaimer.

(21) Appl. No.: **17/084,483**

(22) Filed: **Oct. 29, 2020**

(65) **Prior Publication Data**

US 2021/0131916 A1 May 6, 2021

Related U.S. Application Data

(63) Continuation-in-part of application No. 16/671,105, filed on Oct. 31, 2019.

(51) **Int. Cl.**
G01M 17/02 (2006.01)
G01C 19/5783 (2012.01)
(Continued)

(52) **U.S. Cl.**
CPC ***G01M 17/02*** (2013.01); ***B60C 23/041*** (2013.01); ***B60C 23/0422*** (2013.01);
(Continued)

(58) **Field of Classification Search**
None
See application file for complete search history.

(56) **References Cited**

U.S. PATENT DOCUMENTS

4,862,486 A 8/1989 Wing et al.
5,181,975 A 1/1993 Pollack et al.
(Continued)

FOREIGN PATENT DOCUMENTS

WO 2020036859 A1 2/2020

OTHER PUBLICATIONS

International Search Report dated Feb. 2, 2021 for corresponding International Application No. PCT/US2020/058402 filed Oct. 30, 2020; total 2 pages.
(Continued)

Primary Examiner — Peter J Macchiarolo
Assistant Examiner — Jermaine L Jenkins
(74) *Attorney, Agent, or Firm* — Snell & Wilmer L.L.P.

(57) **ABSTRACT**

Sensor assemblies and systems comprise a housing configured with an electrical sensor device retained therein to protect the sensor device. The housing may include display indicia relating to some aspect of the sensor assembly. The electrical sensor device include electrical components useful for the purpose of monitoring and transmitting desired data relating to operating parameters/conditions of the dynamic article that the sensor assembly is attached with. The data is transmitted wirelessly from the electrical sensor device. The housing is removably attached with a retaining member that is also attached with the dynamic article or an element connected thereto. A receiver external from the dynamic article receives the data to determine such operating parameter/or conditions, when the dynamic article is a vehicle tire, as outside diameter, tread depth, pressure, radial load, vehicle camber and/or toe alignment variations, and tire/vehicle location, which may be stored.

57 Claims, 11 Drawing Sheets

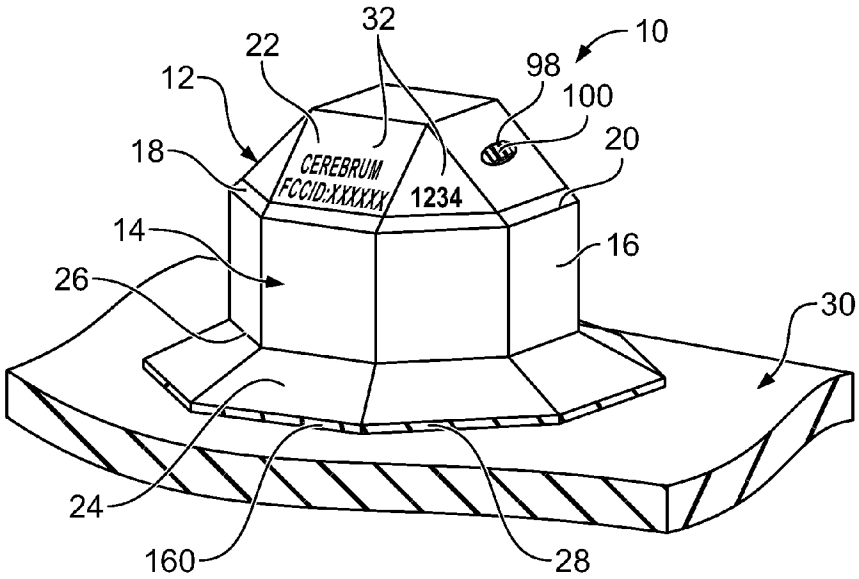

(51) **Int. Cl.**
B60C 23/04 (2006.01)
G01S 19/01 (2010.01)

(52) **U.S. Cl.**
CPC ***B60C 23/0488*** (2013.01); ***G01C 19/5783*** (2013.01); ***G01S 19/01*** (2013.01)

(56) **References Cited**

U.S. PATENT DOCUMENTS

5,500,065	A	3/1996	Koch et al.	
5,562,787	A	10/1996	Koch et al.	
5,573,610	A	11/1996	Koch et al.	
5,573,611	A	11/1996	Koch et al.	
5,731,754	A	3/1998	Lee, Jr. et al.	
5,971,046	A	10/1999	Koch et al.	
6,030,478	A	2/2000	Koch et al.	
6,208,244	B1	3/2001	Wilson et al.	
6,217,683	B1	4/2001	Balzer et al.	
6,255,940	B1 *	7/2001	Phelan	B60C 23/0493 73/146
6,257,289	B1	7/2001	Tomita et al.	
6,309,494	B1	10/2001	Koch et al.	
6,688,353	B1	2/2004	Koch	
6,788,192	B2	9/2004	Shimura	
7,693,626	B2 *	4/2010	Breed	B60C 23/0408 73/146.2
7,770,444	B2	8/2010	Bertrand	
7,900,665	B2	3/2011	Shimura	
8,248,225	B2	8/2012	Buck et al.	
8,657,975	B2	2/2014	Bell	
8,776,590	B2	7/2014	Kempf et al.	
8,874,386	B2	10/2014	Brusarosco et al.	
9,950,575	B2	4/2018	Marques et al.	
10,119,876	B2	11/2018	Marques et al.	
10,712,238	B2	7/2020	Ledoux et al.	
2002/0029626	A1	3/2002	Koch et al.	
2003/0221766	A1	12/2003	Strache et al.	
2011/0025487	A1	2/2011	Laird et al.	
2013/0167999	A1	7/2013	Nakatani et al.	
2016/0332493	A1	11/2016	Atsumi et al.	
2017/0232806	A1	8/2017	Sakamoto et al.	
2018/0186200	A1	7/2018	Brusarosco et al.	
2019/0160895	A1	5/2019	So et al.	
2019/0184773	A1	6/2019	Saito	
2019/0187027	A1	6/2019	Lin et al.	
2021/0181063	A1	6/2021	Dodani et al.	
2021/0370726	A1	12/2021	Dodani et al.	

OTHER PUBLICATIONS

Written Opinion of the International Searching Authority dated Feb. 2, 2021 for corresponding International Application No. PCT/US2020/058402 filed Oct. 30, 2020; total 13 pages.

Non-Final Office Action dated Aug. 15, 2022 in corresponding U.S. Appl. No. 16/671,105, filed Oct. 31, 2019; total 23 pages.

Notice of Allowance dated Apr. 11, 2023 in corresponding U.S. Appl. No. 16/671,105 filed Oct. 31, 2019; total 9 pages.

International Preliminary Report on Patentability dated May 3, 2022 in corresponding International Application No. PCT/US2020/058402 filed Oct. 30, 2020; total 14 pages.

Non-Final Office Action dated May 18, 2023 in corresponding U.S. Appl. No. 16/671,105, filed Oct. 31, 2019; total 8 pages.

* cited by examiner

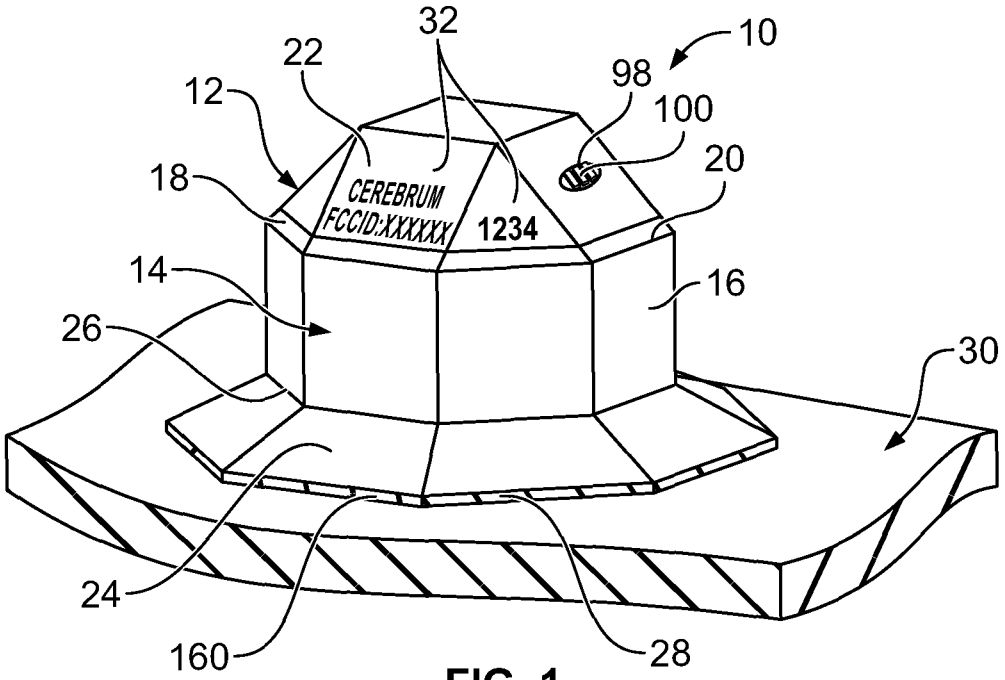
32
10
22
98
12
100
18
20
CEREBRUM
FCC/ID:XXXXXX
1234
14
16
26
30
24
160
28

FIG. 1

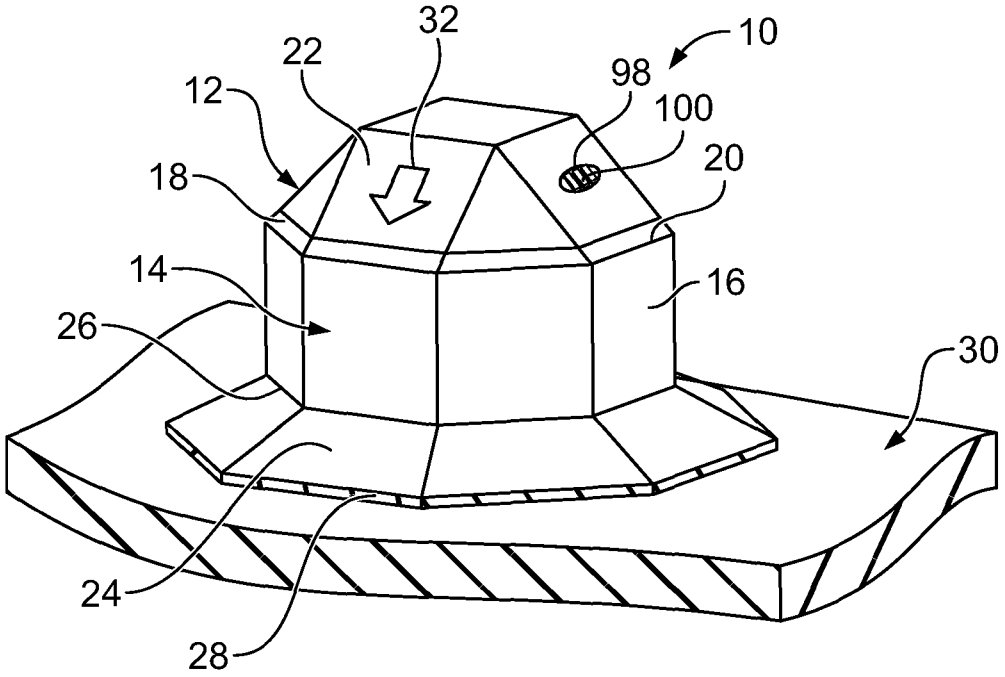
32
10
22
98
12
100
18
20
14
16
26
30
24
28

FIG. 2

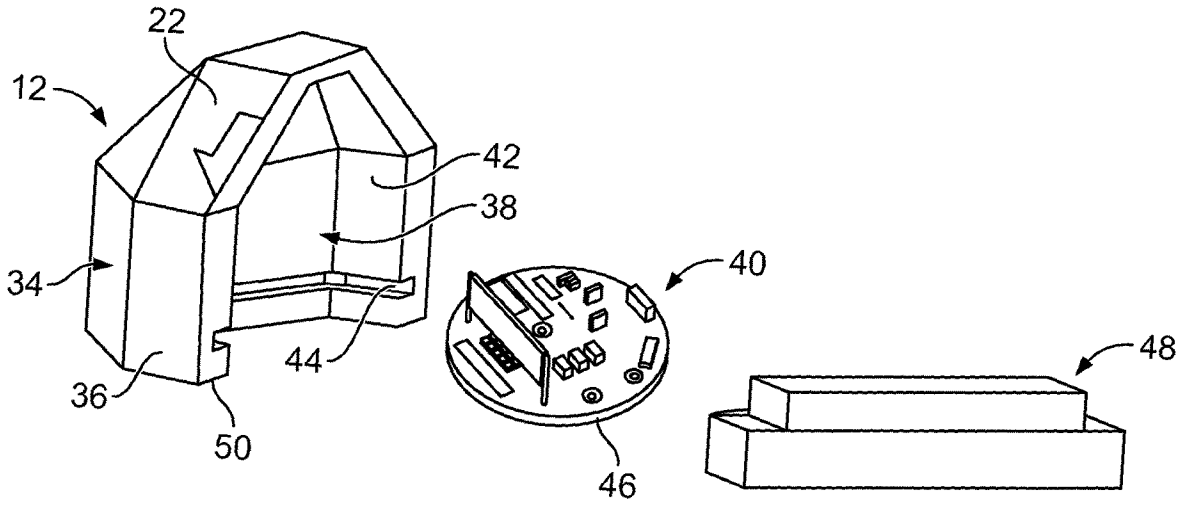

FIG. 3

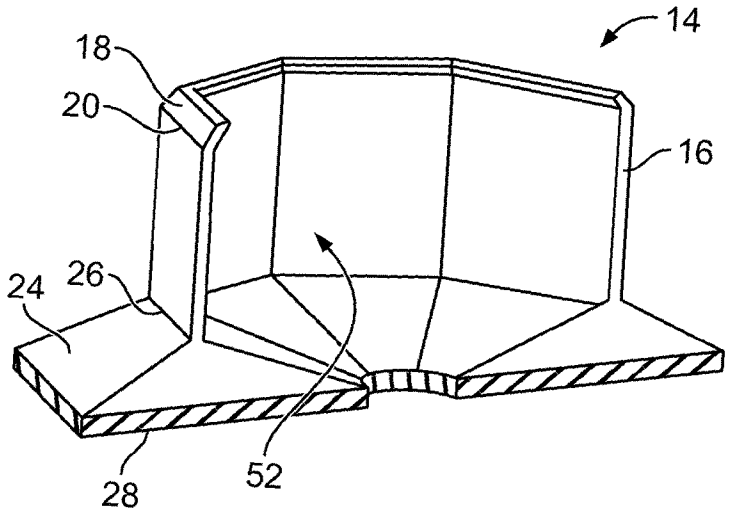

FIG. 4

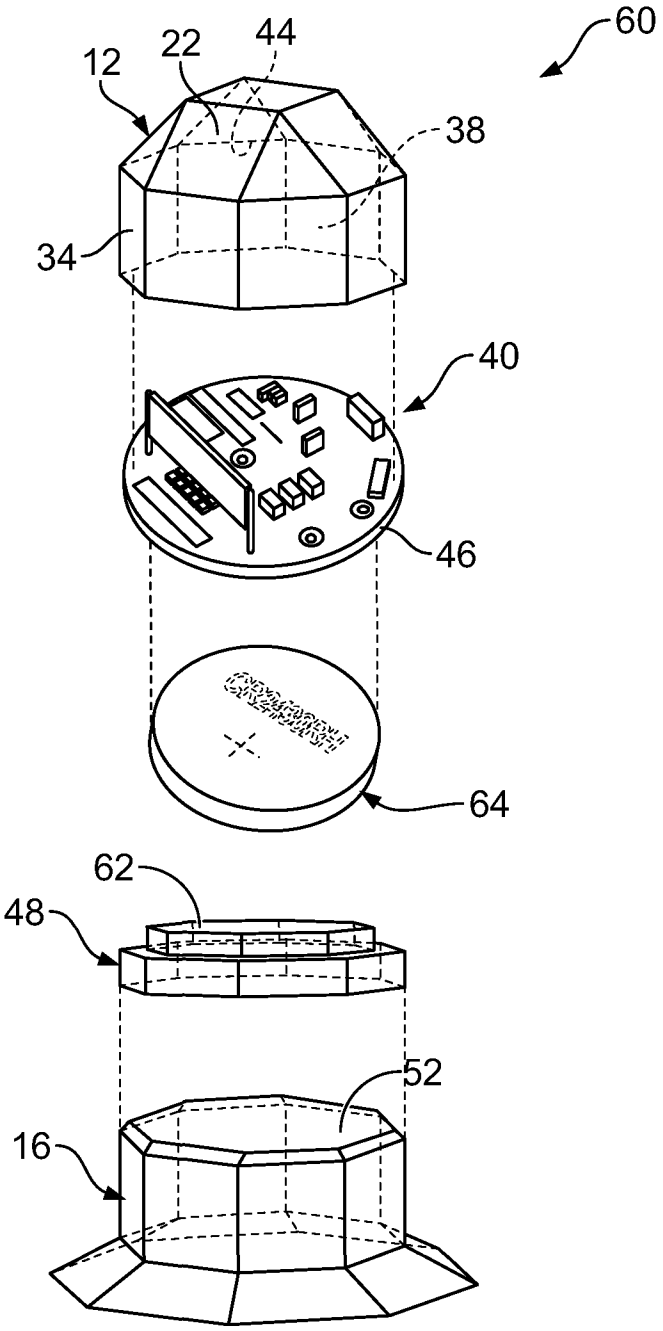

FIG. 5

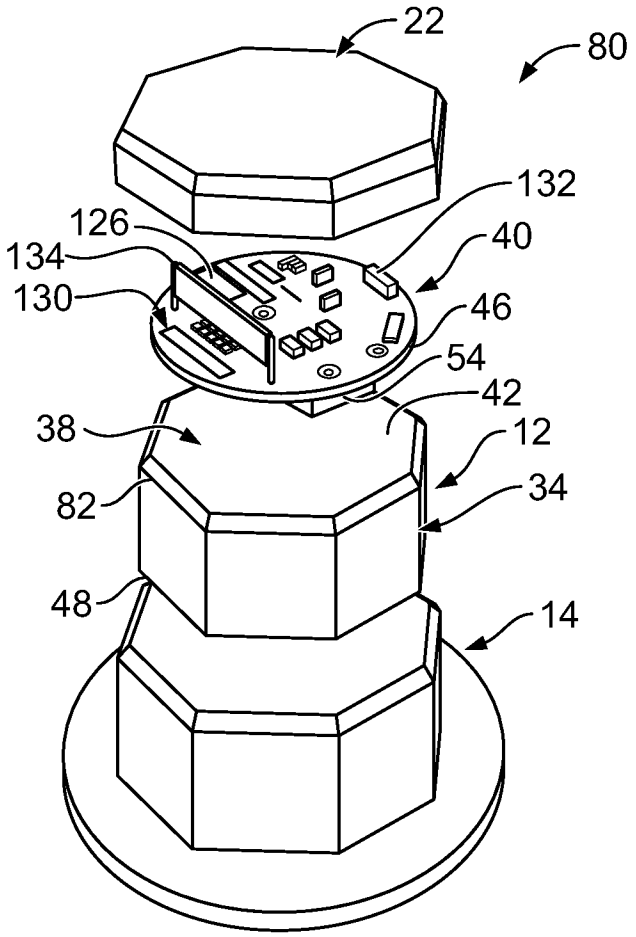

FIG. 6

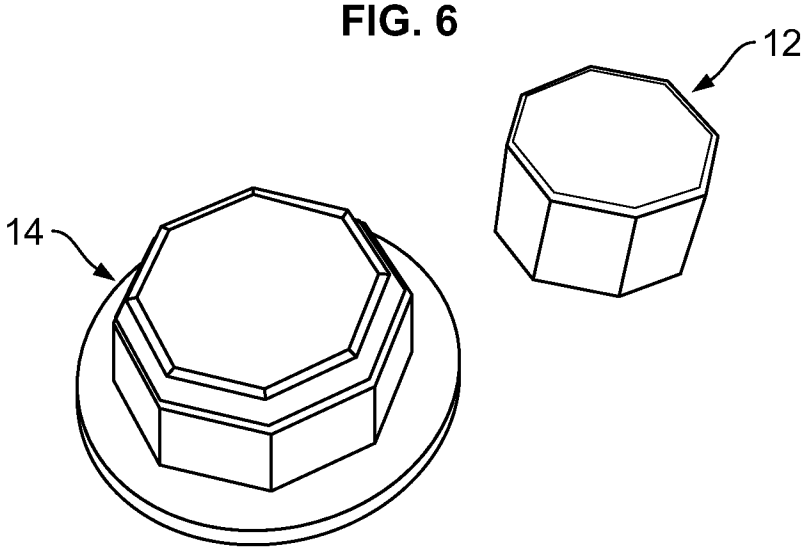

FIG. 7

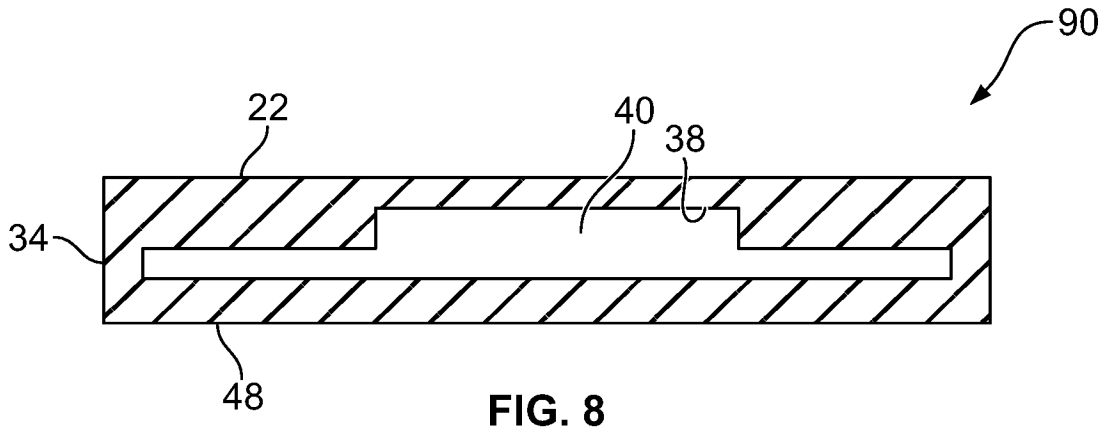

FIG. 8

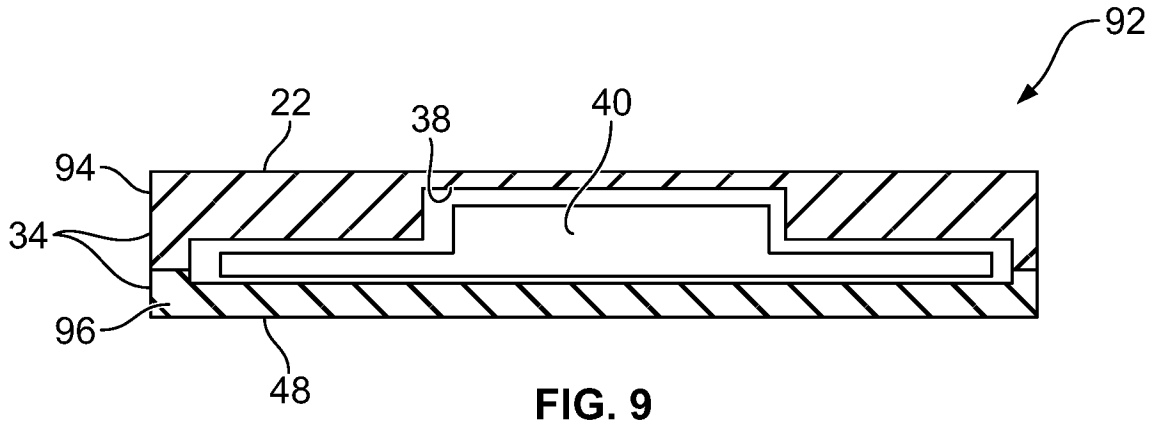

FIG. 9

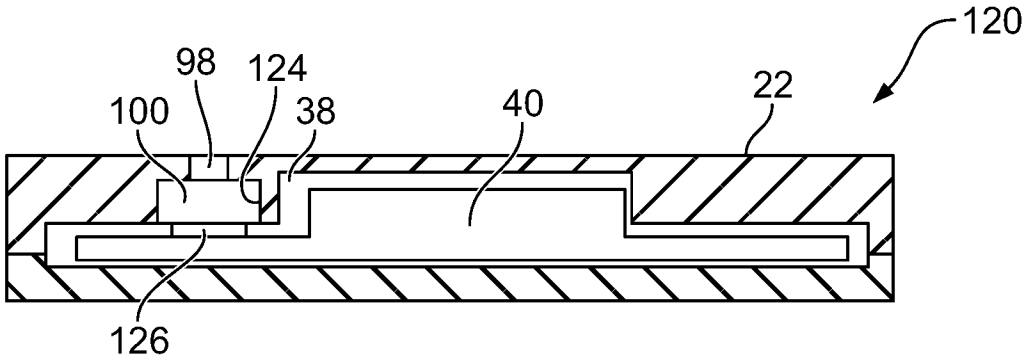

FIG. 10

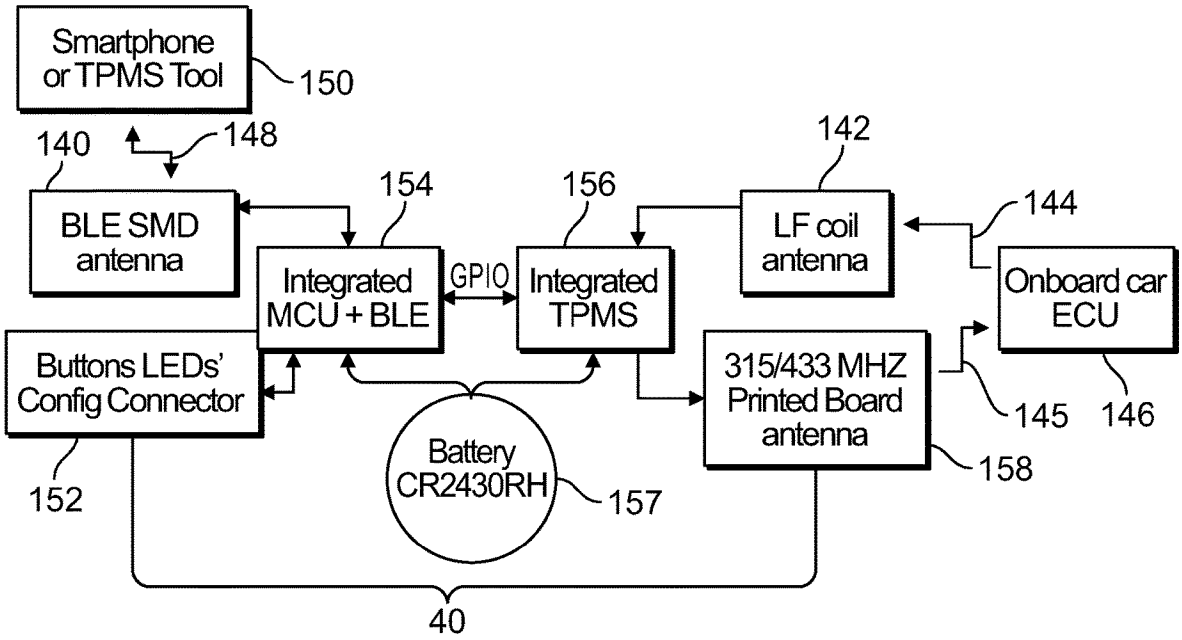
Smartphone or TPMS Tool
150
140
148
BLE SMD antenna
154
Integrated MCU + BLE
GPIO
156
Integrated TPMS
142
LF coil antenna
144
Onboard car ECU
Buttons LEDs' Config Connector
315/433 MHZ Printed Board antenna
145
146
158
152
Battery CR2430RH
157
40

FIG. 11

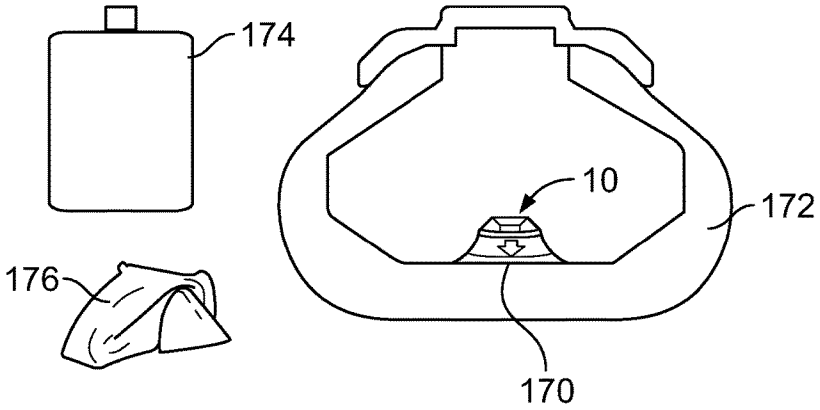
174
10
172
176
170

FIG. 12

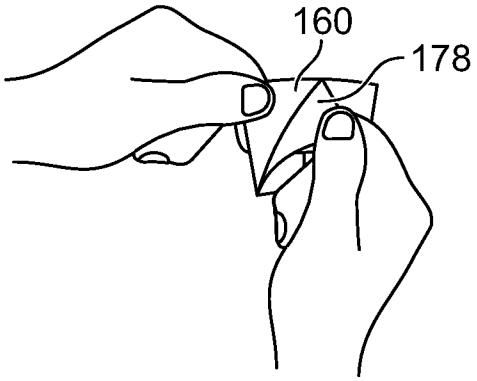

FIG. 13

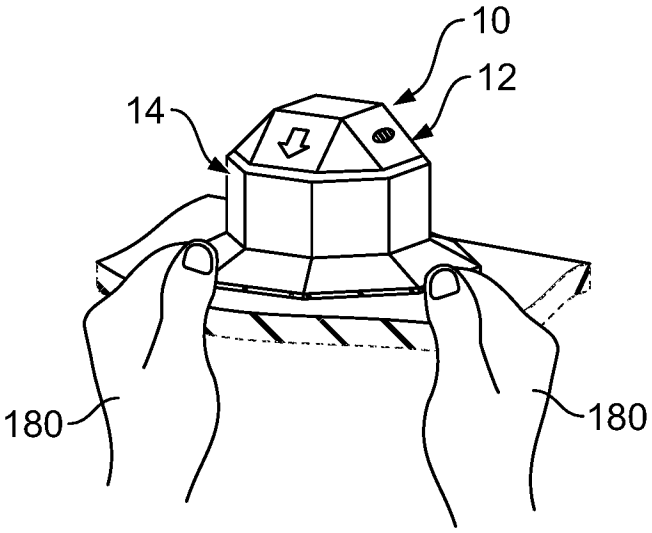

FIG. 14

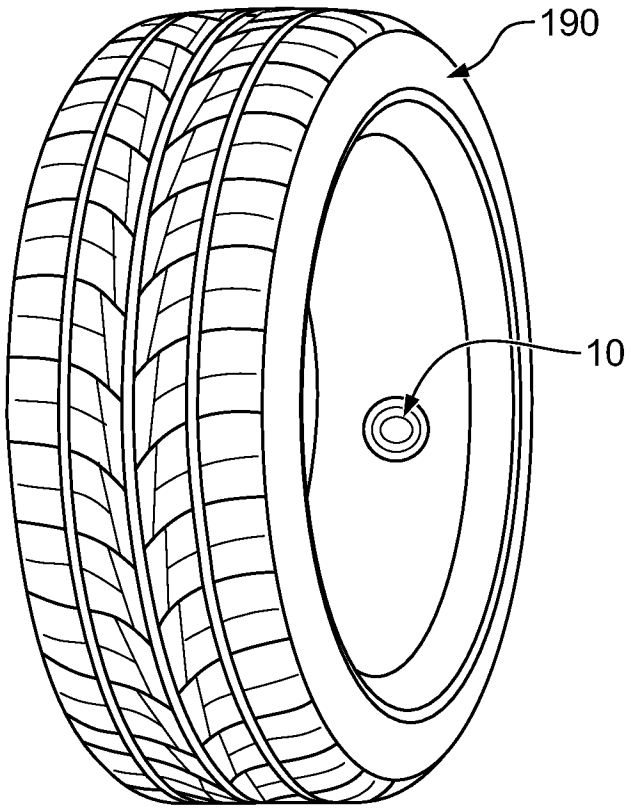

FIG. 15

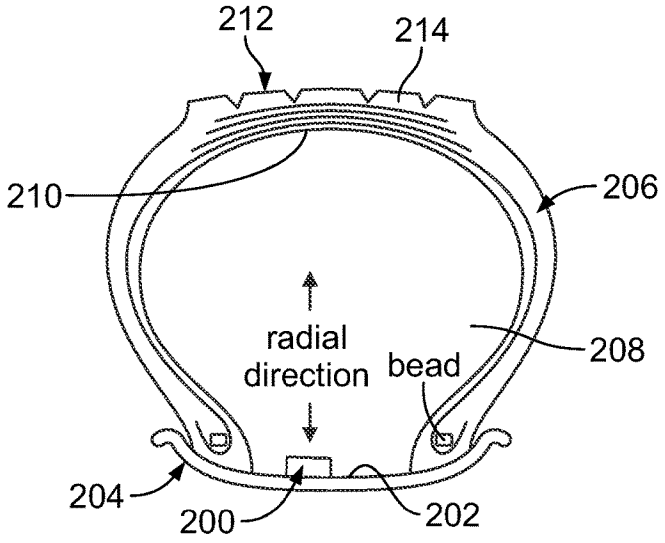

FIG. 16

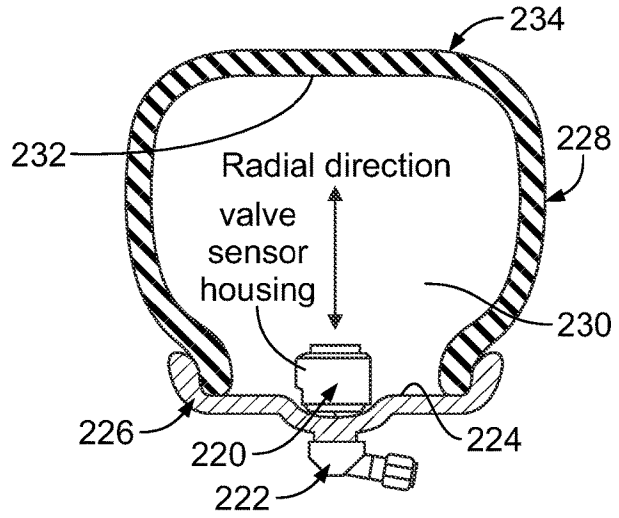

FIG. 17

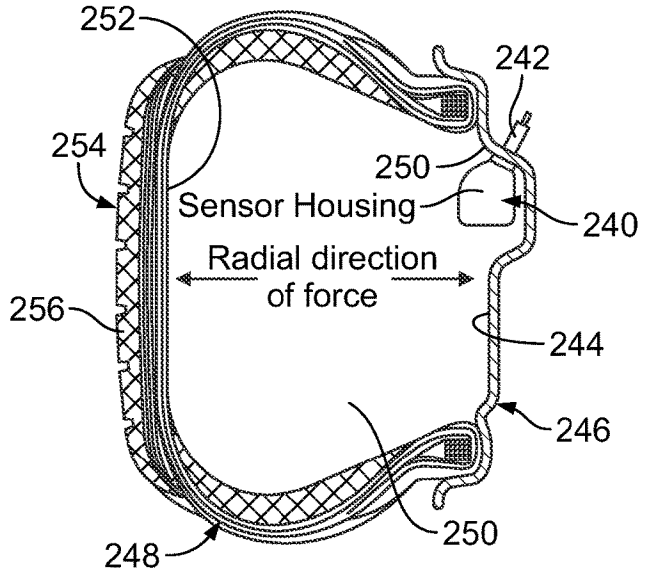

FIG. 18

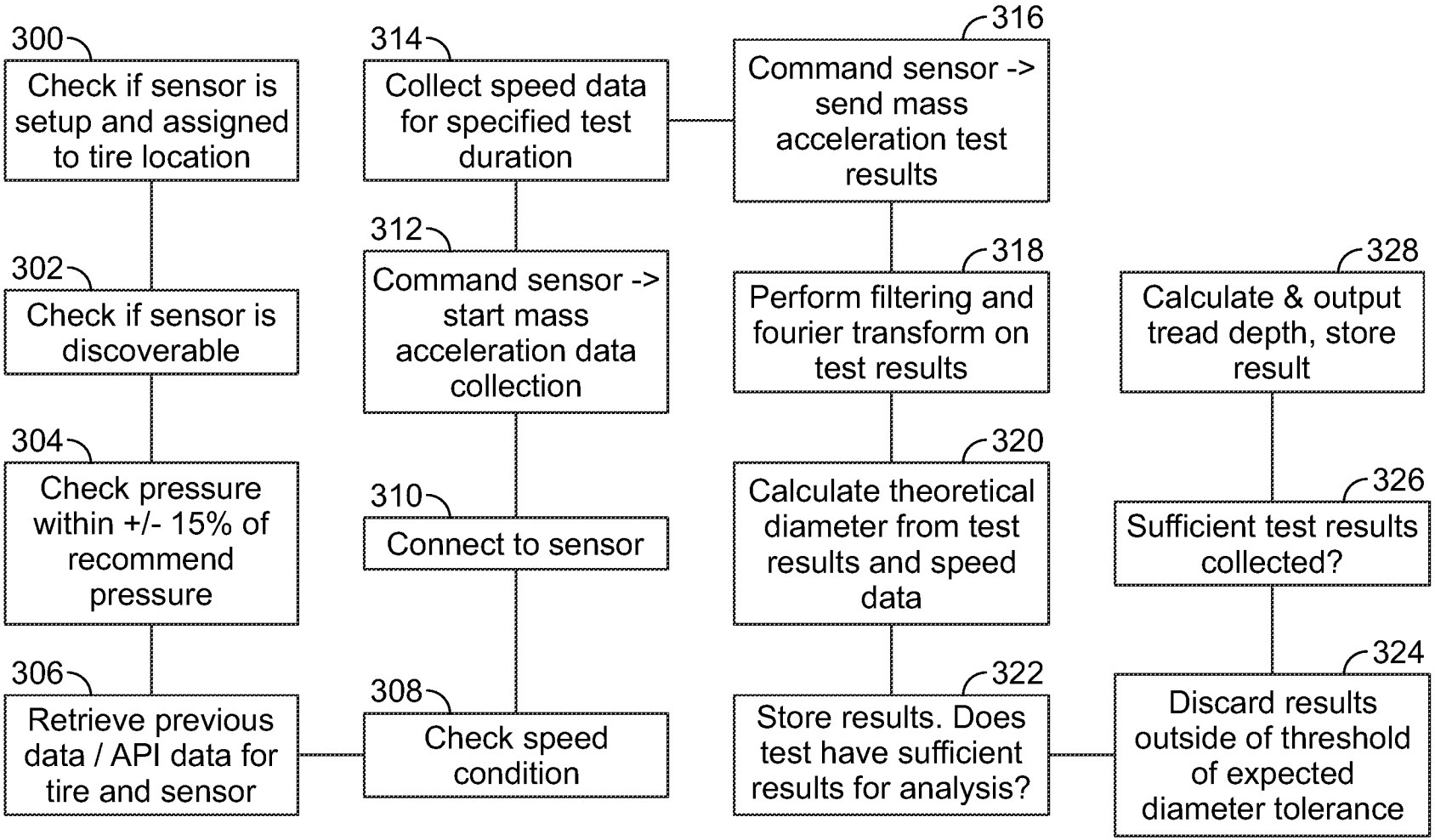
300
Check if sensor is setup and assigned to tire location
302
Check if sensor is discoverable
304
Check pressure within +/- 15% of recommend pressure
306
Retrieve previous data / API data for tire and sensor
308
Check speed condition
310
Connect to sensor
312
Command sensor -> start mass acceleration data collection
314
Collect speed data for specified test duration
316
Command sensor -> send mass acceleration test results
318
Perform filtering and fourier transform on test results
320
Calculate theoretical diameter from test results and speed data
322
Store results. Does test have sufficient results for analysis?
324
Discard results outside of threshold of expected diameter tolerance
326
Sufficient test results collected?
328
Calculate & output tread depth, store result

FIG. 19

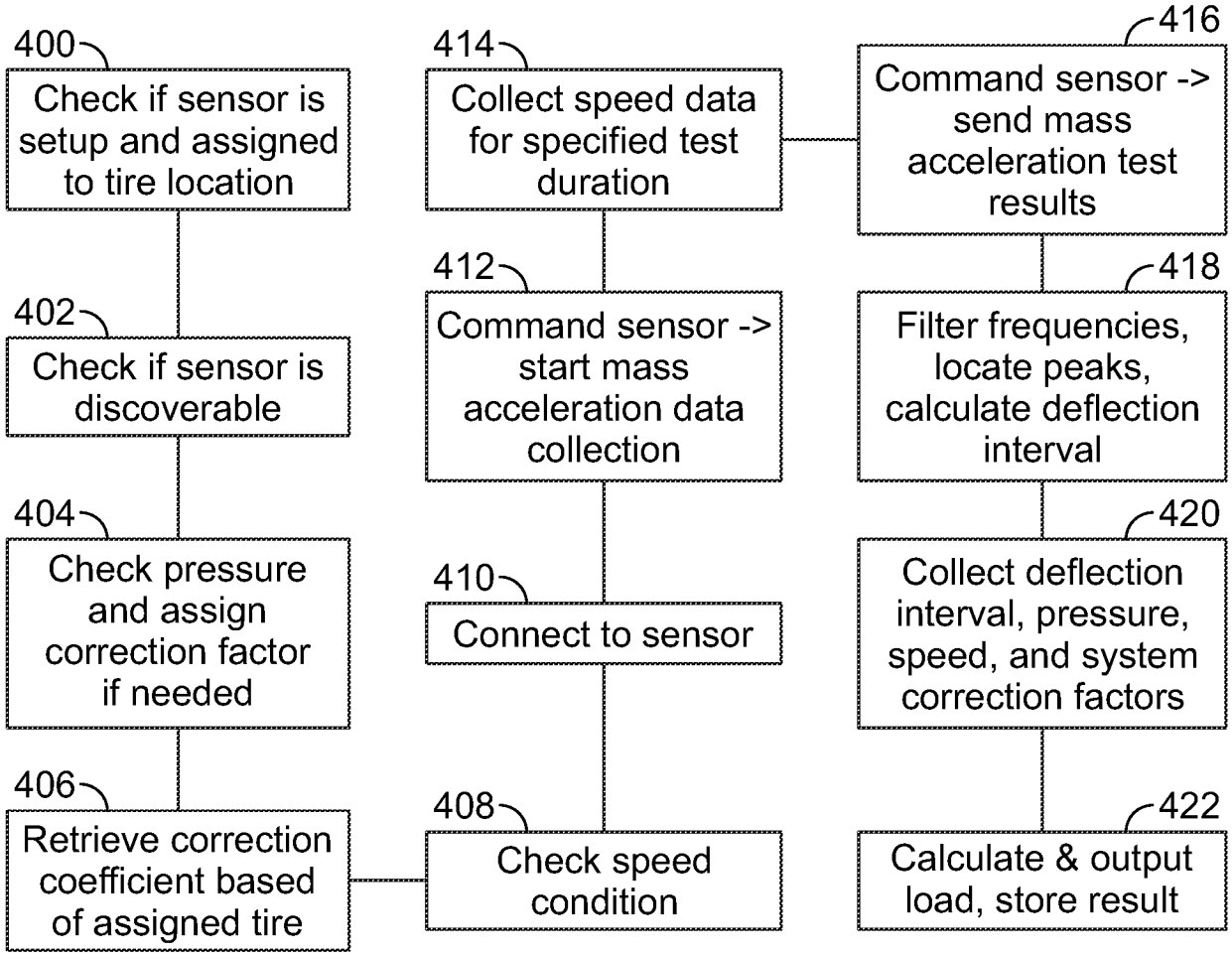
400
Check if sensor is setup and assigned to tire location
402
Check if sensor is discoverable
404
Check pressure and assign correction factor if needed
406
Retrieve correction coefficient based of assigned tire
408
Check speed condition
410
Connect to sensor
412
Command sensor -> start mass acceleration data collection
414
Collect speed data for specified test duration
416
Command sensor -> send mass acceleration test results
418
Filter frequencies, locate peaks, calculate deflection interval
420
Collect deflection interval, pressure, speed, and system correction factors
422
Calculate & output load, store result

FIG. 20

SENSOR ASSEMBLIES AND SYSTEMS FOR MONITORING A DYNAMIC OBJECT

CROSS-REFERENCE TO RELATED APPLICATIONS

This patent application is a continuation-in-part of U.S. application Ser. No. 16/671,105 filed Oct. 31, 2019, which application is hereby incorporated by reference in its entirety.

FIELD

Sensor assemblies and systems as disclosed herein are configured for use in measuring, monitoring and/or determining one or more features and/or operating conditions or parameters associated with a dynamic object and, more specifically, are configured for use in measuring, monitoring and/or determining a feature, operating parameter, condition, and/or performance aspect of a rotating element such as a vulcanized rubber object or article such as a vehicle tire.

BACKGROUND

It is known that the overall performance and safety of vehicles such as automobiles is highly correlated with tire condition. Since the mid-20th century, tires have moved from a 'basic necessity' often overlooked, to one of the most important components of a vehicle's safety and performance on the road.

Several institutions including the National Highway Traffic Safety Administration (NHTSA), Department of Transportation (DOT), and Society of Automotive Engineers (SAE) have all linked over thousands of accidents, hundreds of deaths, and countless injuries directly with tire condition. These incidents have been determined to source from multiple causes including blowouts, tread separations, and pressure abnormalities. Despite vehicle and tire manufacturer and regulatory institution recommendations, most consumers rarely have the know-how or discipline to perform routine necessary tire maintenance. And, even still, many symptoms of a possible tire failure are undetectable through basic tire maintenance. The introduction of 'run flat' tires (which can operate properly for a period of time despite a low pressure condition) has further exacerbated the issue of failure detectability since many drivers are completely unaware of the tire condition. Thus, the importance of a tire monitoring system to initiate proper tire maintenance for safety became significant.

In addition to the importance of tire condition as it relates to safety, research also proves the economics of fuel economy and tire durability as associated with tire pressure, temperature, etc. Experts in the field have found that the underinflation of tires can reduce fuel economy by 1-3% per psi below the manufacturers' recommended tire inflation level. In addition, over the course of the tire service lifetime, underinflation of 10% can result in premature tire wear of over 15%. Between the cost associated with additional fuel and increased new tire purchase frequency (not to mention the cost associated with vehicle downtime and the cost of maintenance), it is well proven that basic tire awareness and maintenance techniques can save hundreds to thousands of dollars annually for the average consumer. With fleet vehicles that travel hundreds of thousands of miles annually, these savings are exponentially higher. However, despite the economic benefits associated with basic tire awareness and maintenance, the increased costs noted above hit nearly

every consumer and businesses due to real-time data limitations and the effort necessary to efficiently monitor tire and maintain inflation pressure conformity with the manufacturer recommendations.

The 21st century has marked the start of a new era for the advancement of automotive vehicles with the integration of advanced technological systems known as vehicle telematics. This technology has proven useful for related industries such as insurance, which can monitor vehicle behavior (particularly surrounding an event such as a crash) for usage-based-insurance rate adjustments. Systems like rear camera detection, lane departure and blind spot notifications, and adaptive cruise control (to name a few) are driving improvements for safety, fuel efficiency and performance and leading towards the feasibility of autonomous vehicles. Whereas drivers have historically relied on subjective handling and steering feedback, an autonomous vehicle depends entirely on feedback through sensors to perform and react. Yet, while vehicle technology continues to advance and adapt quickly in support of autonomous vehicles, it is the tires that have shown the least progression. Without the real-time feedback of tire conditions such as tire pressure, temperature, slip, strain, load, object shape such as the outside, free, or rolling radius/diameter, tread wear, etc., autonomous vehicles will have never achieved optimum performance and safety.

Recognizing these limitations and the importance of tire monitoring as it relates to the aforementioned factors, the automotive industry and regulatory entities have introduced waves of products and regulations associated with vehicle tires with the goal of improving vehicle safety and performance and supporting autonomous vehicle technology. One major advancement in tire technology has been the solution to continuously monitor tire inflation pressure and in some cases temperatures.

Currently there are two mainstream methods for automatically detecting tire inflation pressure; namely, an indirect method and a direct method. The indirect method is generally based on monitoring the number of tire rotations over a period of time utilizing an anti-lock braking system (ABS) of the vehicle and determining tire pressure variations. Though effective as a general indication of tire pressure variations, this method is not able to detect immediate and significant tire pressure loss conditions or provide specific data as it relates to each tire pressure condition. The direct detection method seeks to resolve these limitations utilizing microelectromechanical (MEMS) pressure sensors mounted in the wheel of each tire which communicates with the vehicle's primary on-board engine computer or control unit (ECU) and/or other receiver devices such as a mobile phone. This direct detection method has gained widespread popularity, and in 2007 the U.S. government mandated the use of direct tire-pressure monitoring system (TPMS) technology in nearly all motor vehicles. This mandate has since been adopted by several other countries and continents and thousands of tire monitoring products have since been developed.

Over the past decade or so, three main types of direct TPMS sensors have emerged from technology leaders in the automotive industry. The first type is a clamp-on-rim sensor which mounts directly to the well bed of the wheel utilizing a clamp. The second and most commonly chosen type for OE applications is the valve-stem-attached sensor which affixes within the tire and wheel assembly on the base of a valve stem. These two types typically require installation by an industry professional with technical training as well as access to TPMS tools for activating and programming the

sensors to properly communicate with the vehicle ECU. The third type, which is common in aftermarket and used for do-it-yourself applications, is the valve-cap-attached sensor which replaces the valve stem cap and does not typically require special tooling. However, this third type generally communicates via BLE with a receiver such as a mobile phone or similar to display to the driver as opposed to the vehicle ECU. This valve-cap-attached sensor has proven useful for vehicles manufactured prior to the government TPMS mandate, which are not equipped with TPMS to ECU communication or displays.

Despite this progress in tire monitoring technology, nearly all TPMS sensors available today remain inadequate when it comes to complete tire condition monitoring. Tire (and vehicle) safety and performance is a consideration of multiple factors including but not limited to pressure, temperature, condition, load and alignment. As it stands today, the majority of vehicles equipped with TPMS technology only communicate single tire parameter; pressure. Further limiting, most vehicle manufacturers' TPMS displays used to alert drivers of a tire pressure concern do not indicate which tire is experiencing an issue and even fewer display what the issue is (whether pressure variation or simply a sensor communication issue) or how severe of a concern the alert is (slow leak, major pressure loss, etc.).

Considering further the extremely limited, advanced automotive manufacturer and aftermarket tire sensor displays which provide this level of detail, a second parameter of tire temperature is rarely available and in nearly all cases an irrelevant output. By the nature of TPMS design which is affixed to the wheel, valve stem or valve cap, the temperature which is monitored by these sensors is actually tire air temperature as opposed to the tire rubber temperature itself. This is misleading given the variation (in excess at times of 30 degrees Fahrenheit) that exists between tire rubber and tire air temperature, rendering this sensor output useless particularly for motorsports applications where real-time tire temperature monitoring is pivotal.

Given the evident shortcomings of traditional TPMS solutions, a limited few companies have developed electronic units which affix directly to the vehicle tires as opposed to the wheel, valve stem or valve cap. These solutions are placed within a flexible "housing" affixed to the inner tire surface typically opposite of the tire tread surface. Further still, it has been found that even these advanced TPMS solutions remain impractical or inadequate either by:

1. Excessive sizing and weight causing tire performance and sensor durability issues;
2. Difficulty of affixing to all tire inner surfaces, often solely through the vulcanization of the "housing" to the tire during the green tire process;
3. Limited application of the technology to specific tire manufacturers or tire models manufactured with the technology;
4. Limited functionality and reporting of total tire performance parameters such as temperature, treadwear, alignment, load, etc.;
5. Lack of diversity of communication protocols further limiting the availability to specific vehicles; and
6. Requirement of significant investment for tooling to configure and output sensor information.

SUMMARY

Sensor assemblies and systems as disclosed herein are configured for use with a dynamic object for purposes of monitoring one or more operating conditions and/or parameters of the object. In an example, the dynamic object is in the form of a rotating element, and in a particular embodiment the rotating element is a vulcanized rubber article. In an example, the sensor assembly is configured for attachment with the vulcanized rubber article. The sensor assembly may comprise a housing having an outer surface and an internal cavity that is enclosed within the housing. In an example, the housing comprises a top cover, a wall structure, and a base section that define the internal cavity. The top cover, wall structure and base section may be formed from the same or different materials, and one or more of the top cover, wall section, and base section may separate or integral with one another.

An electrical sensor device may be disposed within the housing internal cavity and attached therein to prevent movement of the electrical sensor device within the cavity. In an example, the one of the top cover or base section is removably attached with the wall structure to facilitate installation and/or removal of the electrical sensor device from the internal cavity. In an example, the electrical sensor device is mechanically attached within the internal cavity by one or more surface features within the internal cavity that contact the electrical sensor device to retain its position therein, and wherein an open space exists above and below the electrical sensor device within the internal cavity. In an example, the electrical sensor device may be encapsulated by the inner cavity of the housing during a process of making the housing that operates to retain the position of the electrical sensor device within the housing. In an example, the housing includes an opening through the outside surface to the internal cavity, and further includes a filter that is positioned to filter air passing into the internal cavity before reaching the electrical sensor device.

The electrical sensor device is configured to sense, transmit and/or receive information regarding surrounding conditions, orientation and/or location when the sensor assembly is attached with a dynamic object such as a vulcanized rubber article. In an example, sensor element is configured to sense one or more variables selected from the group consisting of air pressure, temperature, acceleration, or orientation or location of the environment, sensor assembly, of the vulcanized rubber article. In an example, the electrical sensor device comprises a printed circuit board having electrical circuitry, a portable power source for providing power to the electrical sensor device, at least one sensor element, a storage element, and an antenna for receiving and/or transmitting information from the electrical sensor device.

In an example, the electrical sensor device is configured to communicate wirelessly with one or more receivers or transmitters that are external from the rubber article to thereby provide a sensing system as disclosed herein. In an example, sensing system receivers have one or more antennas and are capable of wirelessly communicating to and from the electrical sensor device, e.g., with the printed circuit board or component attached therewith of the electrical sensor device. In an example, the electrical sensor device may include more than one antenna that are capable of transmitting and/or receiving wireless communication via Bluetooth Low Energy (BLE), Low Frequency, and/or similar wireless communication technology. In an example, the sensing system external receiver may be in the form of a mobile phone, a vehicle ECU, or alternative electronic device capable of storing, interpreting, displaying and/or again transmitting data that is output from the electrical sensor device. In an example, the sensing system external receiver may be in the form of a signal repeater or booster

which will again transmit the original signal or a variation of translated, filtered or similarly altered data of the electrical sensor device wirelessly or by wired connection to another external receiver as such would be useful when the range of the wireless signal from the electrical sensor device is exceed such as with multi-axle, commercial fleet vehicles. In an example, the sensing system external receiver may be configured to clone the protocol of a traditional TPMS sensor and assign it to the electronic sensor device for communication with a separate external receiver such as a vehicle ECU. In an example, the sensing system external receiver may comprise multiple, unique protocols which can be selected and assigned via LF communications to the electrical sensor device and then transmitted via RF communication with a separate external receiver such as a vehicle ECU. In an example, the sensing system external receiver contains multiple, unique protocols which can be selected and assigned via BLE or similar wireless communications to the electrical sensor device for wireless communication with a separate external receiver such as a vehicle ECU which requires a specific protocol.

In an example, the sensing system comprising the sensing assembly and external devices is capable of calculating a rotating element shape such as the outside, free, or rolling radius/diameter or a tire tread depth condition, e.g., when the rubber article is a vehicle tire. In such example, the external receiver or cloud-based system collects raw data from an accelerometer sensor that is connected with the electrical sensor device and utilizes one or more filtering algorithms and fast furrier transformation (FFT) algorithms from which the external receiver or cloud-based system can determine the specific rotational speed of the vehicle tire at a given velocity from which the rotating element shape such as the outside, free, or rolling radius/diameter or vehicle tire tread depth can be calculated using known industry or manufacturer's outside diameter specifications or tire tread depth specifications, which specifications may be stored and available to a processor for purposes of calculating the rotating element shape such as the outside, free, or rolling radius/diameter or tire tread depth. In an alternative example, the sensing system external receiver collects raw data from a gyroscope that is connected with the electrical sensor device and that is used to calculate the object's geometry from which the rotating element shape such as the outside, free, or rolling radius/diameter or vehicle tire tread depth can be calculated. Additionally the gyroscope may provide information used to determine the alignment of the rotating element or tire, e.g., camber and/or toe parameters. In an example, the sensing system external receiver collects raw data from an accelerometer sensor that is connected with the electrical sensor device and which is used to calculate vehicle camber and/or toe alignment variations, wherein an external processor may be used to provide such calculations. In an example, the sensing system may be configured with the sensor assembly electrical sensor device comprising a global positioning sensor or system that may be used to transmit the location of the rotating element or rubber article, e.g., vehicle tire, within which the sensor assembly is attached to an external receiver or cloud-based system. In an example, the sensor assembly and sensing system as disclosed herein may include storage and processing devices for the purpose of determining the above-described parameters and/or storing desired operating parameters, wherein such storage and/or processing devices may be disposed with the electrical sensor device and/or the external receiver or other external device or cloud-based system, and wherein such operating parameters may be used for research and/or commercial purposes.

The sensor assembly may comprise a retaining member configured to accommodate attachment of the housing therewith, wherein the retaining member has an outside surface configured for attachment with the vulcanized rubber article. In an example, the housing and retaining member may be attached together by mechanical or bonding attachment mechanism. In an example, the housing and electrical sensor device disposed therein may be removed from the retaining member without the use of tools. In an example, the housing and retaining member are configured having a complementary shape to facilitate attachment of the housing with the retaining member. In an example, the housing comprises a wall structure that surrounds the internal cavity, and wherein the retaining member comprises a wall structure having an open chamber that is configured to accommodate the housing wall structure therein to provide attachment therewith. In an example, the housing outer surface includes one or more display features or indicia that are viewable to a user when the housing is attached with the retaining member.

In an example, the retaining member is formed from an elastomeric material that mitigates transmission of shock forces from the vulcanized rubber article to the housing when the retaining member is attached to the vulcanized rubber article and the housing is attached to the retaining member. In an example, the vulcanized rubber article is a vehicle tire, and the retaining member is attached to an inside surface of the vehicle tire. In such an example, the retaining member is attached to an inside surface of the vehicle tire, and such attachment may be provided by the use of an adhesive layer that is interposed between the retaining element and the vehicle tire inside surface. In an alternative example, the retaining member may be vulcanized to the rubber article during a curing manufacturing process of the rubber article. In an example, the housing, electrical sensor device disposed therein, and the retaining member may be removable from the vulcanized rubber article. In an alternative example, the retaining member is attached to an inside surface of a vehicle wheel, and such attachment may be provided by use of an adhesive layer that is interposed between the retaining element and the vehicle wheel inside surface. In an alternative example, the retaining member is attached to a vehicle wheel via the valve-stem location, and such attachment is provided by mechanically fixturing the retaining element to the valve-stem, e.g., at a location within the wheel or outside of the wheel.

An example method for using pressure assemblies and sensing systems as disclosed herein comprises installing the electrical sensor device within the housing internal cavity such that the electrical sensor device placement is mechanically fixed therein and the electrical sensor device is surrounded by the housing, and attaching the housing to the retaining member. In an example, the retaining member may be adhesively attached to an already vulcanized rubber article, which adhesive attachment may be done by hand pressure. In an example, a target surface of the vulcanized rubber article may be cleaned or otherwise prepared for attachment with the retaining member. Alternatively, the retaining member may be vulcanized with the rubber article during a curing process. In an example, the retaining member may be attached with the rubber article before the housing is attached to the retaining member. Alternatively, the retaining member may be attached with the rubber article with the housing already attached with the retaining member. Alternatively, the retaining member may be attached to

the vehicle wheel with an adhesive or magnet. Alternatively, the retaining member may be attached to the vehicle wheel valve-stem mechanically such as through a screw and bolt technique or the like. In an example, the housing is oriented with respect to the retaining member according to the display feature on the housing. Once the retaining member and housing are both attached with the desired article, the sensor assembly is used to monitor an operating condition or parameter through the use of the electrical sensing device, wherein information related to the operating condition or parameter is wirelessly transmitted from the electrical sensing device to a receiver that is part of the sensing system and that is external from the sensor assembly.

As noted above, sensor assemblies as disclosed herein may be configured to accommodate attachment with inside surface of the dynamic rotating element such as the vehicle tire itself, or the sensor assembly may be configured to accommodate attachment with another dynamic article or element connected with or mounted to the dynamic rotating element, such as a vehicle wheel or valve stem.

Configured in the manner described above, sensor assemblies and sensing systems enable and facilitate monitoring a number of operating parameters and/or conditions of the dynamic rotating element attached with the sensor assembly, e.g., a vehicle tire, not otherwise possible given the conventional state of such technology, and does so in a manner that enables such monitoring wirelessly through the use of commonly-used external devices such as vehicle ECUs, mobile phones, tablets, cloud-based devices and the like.

BRIEF DESCRIPTION OF THE DRAWINGS

Vehicle tire monitoring sensor assemblies and systems as disclosed herein will now be described by way of example with reference to the accompanying figures, wherein like reference numerals refer to like elements, and of which:

FIG. **1** is a perspective view of a sensor assembly, in accordance with various embodiments;

FIG. **2** is a perspective view of a sensor assembly, in accordance with various embodiments;

FIG. **3** is a perspective sectional view of a sensor assembly and electrical sensor device, in accordance with various embodiments;

FIG. **4** is a perspective sectional view of a sensor assembly retainer, in accordance with various embodiments;

FIG. **5** is a perspective exploded view of a sensor assembly in an unassembled state, in accordance with various embodiments;

FIG. **6** is a perspective exploded view of a sensor assembly in an unassembled state, in accordance with various embodiments;

FIG. **7** is a perspective view of a sensor assembly housing and retainer in an unassembled state, in accordance with various embodiments;

FIG. **8** is a cross sectional side view of a sensor assembly housing, in accordance with various embodiments;

FIG. **9** is a cross sectional side view of a sensor assembly housing, in accordance with various embodiments;

FIG. **10** is a cross sectional side view of a sensor assembly housing, in accordance with various embodiments;

FIG. **11** is a block diagram view of data flow and electrical components of a sensor assembly and system, in accordance with various embodiments;

FIG. **12** is a perspective view of a sensor assembly attached with a vehicle tire and articles useful for attaching the same, in accordance with various embodiments;

FIG. **13** is a perspective view of an attachment method for a sensor assembly including an adhesive layer, in accordance with various embodiments;

FIG. **14** is a perspective view of an attachment method for a sensor assembly involving hand pressure, in accordance with various embodiments;

FIG. **15** is a perspective view of a sensor assembly attached with a vehicle tire, in accordance with various embodiments

FIG. **16** is a perspective sectional view of an example sensor assembly as disclosed herein as attached with a wheel of a wheel and tire assembly;

FIG. **17** is a perspective sectional view of an example sensor assembly as disclosed herein as attached with a valve stem of a wheel and tire assembly;

FIG. **18** is a perspective sectional view of an example sensor assembly as disclosed herein as attached with angular valve stem of a wheel and tire assembly;

FIG. **19** is a flowchart of example process steps used for determining a tread depth of a dynamic rotating object using sensor assemblies and systems as disclosed herein; and

FIG. **20** is a flowchart of example process steps used for determining a dynamic load on a dynamic rotating object using sensor assemblies and systems as disclosed herein.

DESCRIPTION

Embodiments of sensor assemblies and systems for monitoring dynamic objects will be described hereinafter in detail with reference to the attached drawings, wherein like reference numerals refer to the like elements. Sensor assemblies and systems as disclosed herein may, however, be embodied in many different forms and should not be construed as being limited to the embodiments set forth herein. Rather, these embodiments are provided so that the disclosure will be thorough and complete, and will fully convey the concept of sensor assemblies and systems as disclosed herein to those skilled in the art. Further the type of dynamic object used with sensor assemblies and systems as disclosed herein can and will vary depending on the particular use application. For example, the dynamic object, element, or article can be one that generally moves, rotates, stretches, etc. Thus, while sensors assemblies and systems as disclosed herein will be described and illustrated as being used with a dynamic rotating element in the form of a vulcanized rubber article, e.g., a vehicle tire, it is understood that such sensor assemblies and systems are intended to be used with other types of dynamic objects, e.g., those that may be used in other types of applications in other industries including an not limited to sports & fitness, industrial, electrical and the like for purposes of monitoring certain operating parameters/conditions of the same. Examples of other types of dynamic rotating elements that may be monitored by sensor assemblies and systems as disclosed herein include metallic wheels, non-pneumatic or solid rubber tires, cushion tires, and the like.

In an example, sensor assemblies and systems as disclosed herein embodied for use with a vehicle tire seek to fulfill the shortcomings of both traditional TPMS systems as well as the few existing vehicle tire-mounted monitoring products, thus advancing industry vehicle safety and performance with a total tire monitoring system.

Generally, sensor assemblies as disclosed herein are configured to both accommodate attachment of a desired electrical sensor device within a housing internal cavity, and facilitate attachment of the sensor assembly with a surface of a dynamic object, whether it be the surface of the actual dynamic object being monitored or the surface of an element

that is attached with the dynamic object. In an example, the dynamic object may be a vulcanized rubber article such as a vehicle tire in accordance with a specific application method developed to ensure durability and functionality throughout the lifecycle of use for the vulcanized rubber article. The combination of the specific sensor assembly configuration and method for affixing the sensor assembly to the vulcanized rubber article, enables use of systems as disclosed herein to obtain information from the sensor assembly to measure, monitor, determine and/or report data relating to such features or parameters as the object's shape such as the outside, free, or rolling radius/diameter and/or tread depth, operating conditions, orientation, and/or location of the vulcanized rubber article, specifically a vehicle tire.

FIG. **1** illustrates an example embodiment sensor assembly **10** as disclosed herein comprises a housing **12** that includes an internal cavity (shown in FIG. **3**) that contains an electrical sensor device (shown in FIG. **3**) therein. In an example, the housing **12** is disposed within a retaining member or retainer **14** that is specifically configured to accommodate attachment with the housing **12** (e.g., placement of the housing **12** therein). In an example, the retainer **14** comprises a wall structure **16** (shown in FIG. **4**) that is configured to surround and capture a wall structure of the housing therein. In an example, the retainer **14** may include a lip **18** that extends radially inwardly a distance from a first axial end **20** of the wall structure **16**, wherein the lip **18** contacts an adjacent section of a top cover **22** of the housing to assist (by imposing a downward pressure on the housing top cover) retaining the housing **12** in a fully seated or disposed position within the retainer **14**. The retainer **14** includes a base section **24** that extends radially outwardly a distance from a second axial end **26** of the wall structure **16** to thereby provide an increased surface area along a bottom surface **28** of the retainer **14** for attachment with a target surface of a vulcanized article **30** such as a vehicle tire.

In an example, the sensor assembly housing top cover **22** may include one or more display features **32** or indicia that may be disposed thereon or be integral therewith, which display features **32** may include indicia such as a model number, serial number, directional information, or any other type of indicia that may serve a purpose to provide information about the sensor assembly **10** to a user upon viewing such indicia. In an example, the display features or indicia **32** may be utilized for identification of the sensor assembly **10** such as brand, model or contents of the assembly; namely the technical specifications or Federal Communication Commission ID (FCC ID) of the electrical sensor device contained therein. The display features or indicia **32** may be printed or otherwise adhered to the housing top cover **22** or may be molded into the top cover **22**. While FIG. **1** illustrates the use of display features **32** in the form of alphanumeric characters, it is to be understood that the display features **32** may be provide in the form of different shapes, objects, signs, figures and the like.

FIG. **2** illustrates an example sensor assembly **10** as disclosed herein, wherein the housing top cover **22** includes a display feature or indicia **32** in the form of an arrow that may provide orientation information to a user for the purpose of properly positioning the sensor assembly (such as "this end up" or an intended alignment direction of the sensor assembly **10**) relative to a rotational direction of the vehicle tire to which the sensor assembly is to be attached.

The display features **32** or indicia may be constructed by way of applying the indicia to the housing top cover **22** by printing, stamping, or the indicia may be formed in the top cover itself by during the molding process of making the housing **12** or by subsequent technique of pressing, branding, or the like. While display features **32** as disclosed herein have been described and illustrated as being on a top cover **22** of the housing **12**, it is to be understood that the display feature **32** may be positioned at different locations on the housing **12** that is viewable by a user and that all such other placement positions are intended to be within the scope of pressure assemblies disposed herein. Alternatively, the display feature **32** may be positioned on the retainer **14**, or display features **32** may be positioned on both the retainer **14** and the housing **12**.

FIG. **3** illustrates a cut-away view of an example sensor assembly housing **12** for the purpose of illustrating a wall structure **34** connected with and extending from the top cover **22**, wherein the wall structure **34** defines an outer side surface **36** of the housing **12**. The housing **12** includes an internal cavity **38** that is disposed within the top cover **22** and wall structure **34** and that is specially configured to accommodate placement of one or more electrical sensor device **40** therein. In an example, the wall structure **34** includes an inside wall surface **42** comprising a surface feature **44** that is specially configured to accommodate and retain placement of the electrical sensor device **40** therein. In an example, the surface feature **44** is provide in the form of a slot or recessed groove that extends laterally along the wall structure inside surface **42** and that is configured to accommodate placement of a peripheral edge **46** of a component of the electrical sensor device **40**, e.g., a printed circuit board or the like, therein to thereby ensure secure fitment of the electrical sensor device **40** within the housing internal cavity **38**.

While the surface feature **44** in this example is provided in the form of a recessed groove that extends completely around the wall structure inside surface **42**, it is to be understood that the surface feature **44** may be configured differently for the purpose of securing fitment or attachment of the electrical sensor device **40** within the housing internal cavity **38** so the electrical sensor device **40** does not move therein. For example, rather than a recessed groove, the surface feature can be provided in the form ribs or tabs or the like that extend radially outwardly a distance from the wall structure inside surface **42** and that are positioned and configured to engage the electrical sensor device **40** peripheral edge **46** to secure placement of the electrical sensor device **40** within the housing internal cavity **38**.

Further illustrated in FIG. **3** is a housing bottom section **48** shown in an unattached form that is configured for attachment with a bottom portion **50** of the housing wall structure **34** to thereby close off the housing internal cavity **38**. In an example, the bottom section **48** may be formed separately from the housing top cover **22** and the wall structure **34**, and may be attached to the wall structure **34** by mechanical attachment and/or by chemical or adhesive bonding or the like. Thus, a feature of the housing **12** as disclosed herein is that it is specially configured to include an internal cavity configured to retain the electrical sensor device in an immovable fixed state therein, and to provide a protective surrounding to the electrical sensor device.

FIG. **4** illustrates a cut-away view of an example retainer **14** for purposes of better illustrating the configuration of the retainer wall structure **16** and an open chamber **52** that is formed within the wall structure **16** and that is configured to complement the housing wall structure **34** for accommodating placement/attachment of the housing **12** therein. Also illustrated is the lip **18** that extends radially inwardly from the wall structure first axial end **20** that is configured to fit

over a portion of the housing top cover **22** when the housing **12** is disposed within the open chamber **52** to help retain placement of the housing **12** within the retainer **16**. Further illustrated is the base section **24** that extends radially outwardly a distance from the retainer wall structure second axial end **26** that gives an enhanced surface area along the bottom surface **28** to provide a strong adhesive attachment with a target surface of the vulcanized rubber article, e.g., vehicle tire.

While the above described figures illustrate a housing **12** having a top cover **22** configured with a domed shape defined by a flat or planer top surface a number of flat surfaces extending in an angular manner downwardly and outwardly therefrom, it is to be understood that the top cover **22** may be configured differently as called for by the particular end-use application and/or as called for by the configuration of the internal cavity **38** useful for accommodating the electrical sensor device **40** therein, and all such different configurations are intended to be within the scope of sensor assemblies as disclosed herein. The same is true for the configuration of the housing wall structure **34** and the complementary configuration of the retainer wall structure **16** for accommodating placement of the housing **12** therein. While housing and retainer wall structures having an octagonal configuration have been illustrated, it is to be understood that the housing and retainer wall structures may be configured differently as called for by a desire to ensure secure and nonrotatable placement of the housing **12** relative to the retainer **14**, the particular end-use application, and/or as called for by the configuration of the internal cavity useful for accommodating the electrical sensor device therein, and all such different configurations are intended to be within the scope of sensor assemblies as disclosed herein.

FIG. **5** illustrates an example sensor assembly **60** in an unassembled state showing a portion of the housing **12** including the top cover **22** and the wall structure **34** in an assembled state and comprising the internal cavity **38** disposed therein. In an example, the internal cavity **38** includes one or more surface features **44** positioned along the wall structure inside wall surface **42** that operates to fix an axial placement position of the electrical sensor device **40** therein. In an example, the surface feature may be in the form of a continuous element or the form of a number of individual elements such as ribs or tabs that project outwardly from the inside wall surface **42** and that contact an upper surface of a peripheral edge of the electrical sensor device **40**. In this example, the surface feature **44** is an edge formed between the intersecting inside surfaces of the housing wall structure and top cover.

A housing bottom section **48** is positioned below the housing wall structure **34** and is configured having an internal surface **62** configured to accommodate placement of a battery **64** therein. The above-described sensor assembly components are assembled by loading the electrical sensor device **40** into the housing internal cavity **38** such that axial movement of the electrical sensor device **40** is limited by the inside wall surface feature **44**, and the battery **64** is disposed onto a backside surface of the electrical sensor device **40** that includes contacts thereon to provide an electrical connection with the battery. Then the housing bottom section **48** is attached to the housing wall structure **34** such that the housing **12** protectively surrounds the electrical sensor device therein. In an example, the bottom section **48** may be mechanically attached to the housing wall structure **34**, e.g., by complementary surface features that operate to form a mechanical attachment (such as a threaded attachment, and tongue in grove attachment, a snap attachment, and the like) and/or by chemical or adhesive bonding or the like. Once the housing **12** is assembled, it may be disposed within the open chamber or cavity **52** and attached to the retainer **16** in the manner described above.

FIG. **6** illustrates an example sensor assembly **80** comprising a housing **12** that is configured somewhat differently from that described above and illustrated in FIG. **5**. Specifically, the housing **12** comprises a wall structure **34** and bottom section **48** that is provided in an assembled state, wherein the wall structure **34** and bottom section **48** may be mechanically attached, bonded together, and/or provided in the form of a one-piece molded construction. In an example, the housing wall structure **34** and bottom section **48** are provide in the form of a one-piece molded construction. The housing **12** includes an inside cavity **38** that is configured having one or more surface features (not shown) disposed therein that engage an underside of the electrical sensor device **40** peripheral edge **46** to fix axial displacement of electrical sensor device **40** within the inside cavity **38**. In an example, the surface features may be in the form of one or more ribs or tabs that project outwardly a distance from the wall structure inside surface **42**. The housing **12** includes a top cover **22** that is configured to attach over an opening **82** of the housing inside cavity **38**, which attachment may be mechanical and/or bonded. In an example, the sensor assembly **80** is assembled by inserting the electrical sensor device **40** into the housing inside cavity **38** until the surface features engage the electrical sensor device **40** to fixedly limit its axial displacement therein. The housing top cover **22** is then positioned over the inside cavity opening **82** and is attached to the housing wall structure **34**. In an example, the housing top cover **22** may include one or more surface features disposed therein that contact the electrical sensor device **40** for the purpose of fixing its position within the housing internal cavity **38** so it does not move therein once the top cover **22** is attached over the internal cavity opening **82**. FIG. **7** shows the housing **12** in an assembled state with the electrical sensor device disposed thereon. Once the housing **12** is assembled, it may be disposed within and attached to the retainer **14** in the manner described above.

Sensor assembly housings **12** as disclosed herein are constructed to provide the inside or internal cavity **38** configured in a manner to fixedly retain and house the electrical sensor device **40** therein without the need for filling agents or materials. In an example, the housing **12** and internal cavity **38** may be constructed via multiple techniques by way of a single material element or multiple material elements. In the case of a single material element construction, the sensor assembly housing **12** may be formed as a one-piece construction around the electrical sensor device **40** by injection molding process or the like. In such example, the housing top cover **22**, wall structure **34**, and bottom section **48** are provided in the form of the single element formed from the same material as described above. In the case of a multiple-element construction, the sensor assembly housing **12** may be formed from separate elements, wherein the elements may be mechanically attached with one another or bonded with one another after the electrical sensor device **40** has been disposed within the internal cavity **38**.

FIG. **8** illustrates an example sensor assembly housing **90** formed from a single material element, e.g., wherein the top cover **22**, wall structure **34**, and bottom section **48** are all formed from a single material surrounding or encapsulating the electrical sensor device **40**, e.g., during an injection molding process or the like. In this example, the housing internal cavity **38** is formed during the process of making the

housing **90** by displacement by the electrical sensor device **40**, and such encapsulation operates to fixedly retain placement of the electrical sensor device **40** therein. Like the housing examples described above, the housing **90** is configured to fit within a retainer **16** for purposes of attaching the housing **90** to the vehicle tire. Alternatively, a housing comprising a single material element construction can be first formed and then modified to include an internal cavity within which the electrical sensor device may be placed.

A housing may also be formed by using two material elements, wherein a first material element is accompanied by a second material element disposed beneath the first material element, and wherein a cavity is formed therebetween to contain the electrical sensor device. In such embodiment, the first and second material elements may be affixed to one another to surround the electrical sensor device therein simultaneously during the formation of the first and second material elements. In such embodiment, the first and second material elements may be formed from the same or different types of materials.

FIG. **9** illustrates another example sensor assembly housing **92** as disclosed herein. In this example, a first material element **94** and a second material element **96** have already been formed in a specific shape so as to create the internal cavity **38** when the two layers are affixed together either mechanically or chemically after the electrical sensor device **40** has been disposed therein. In such embodiment, the first and second material elements may be formed from the same or different types of materials. In this example, the first material element **94** includes the top cover **22** and a portion of the wall structure **34**, and the second material element **96** includes a remaining portion of the wall structure **34** and the bottom section **48**.

Regardless of the construction, the material used to form the sensor assembly housing **12** as disclosed herein is one that is specifically and intentionally designed to protect the integrity and functionality of the electrical sensor device **40** that is disposed therein when installed within the retainer **14**, attached to a tire, and placed into use given the demanding environment of a vehicle tire. Examples of materials useful for forming the housing **12** include, and are not limited to, those materials commonly used for TPMS housings such as rigid plastics as well as elastomeric materials commonly found in the tire and rubber industry like butyl rubber, EPDM rubber, natural rubber, or the like.

A feature of the material selected for forming the housing **12** is that such material operates to protect the electrical sensor device **40** disposed within the internal cavity **38** from contaminants such as oils and moisture, extreme temperatures, and forces such as acceleration, load, vibration, etc., that may be encountered during use within a dynamic object such as a vehicle tire. A further feature of the sensor assembly housings **12** as disclosed herein is the construction of the internal cavity **38** and the use of surface features **44** to mechanically fix and retain the placement position of the electrical sensor device **40** therein. A common technique used to assist in fixturing the electrical sensor device **40** known within the automotive industry is to fill the internal cavity with a coating material such as a neutral silicone or the like for purposes of retaining placement position. A feature of sensor assemblies as disclosed herein is that they do not use or require the use of any such coating or filling agents or materials for any fixturing of the electrical sensor device **40** within the internal cavity **38**. Again, structural support of the electrical sensor device **40** within the internal cavity **38** to fix the position of the electrical sensor device **40** therein is provide by mechanical fixturing, e.g., through the use of surface features within the housing internal cavity **38**. As noted above, such fixturing of the electrical sensor device **40** may be achieved by integrating the electrical sensor device **40** into the manufacturing process of the housing **12**, e.g., such as by transfer or injection molding or the like as illustrated in in FIG. **9**. In such example, the housing first material element **94** and second material element **96** comprise internal cavity profiles which are complimentary to the components of the electrical sensor device **40**, which after assembly provides the necessary stabilization to the battery, sensors, or similar components.

Sensor assemblies as disclosed herein may include an electrical sensor device **40** comprising a sensor configured to rely on the pressure of the surrounding environment, which (when attached within a pneumatic vehicle tire) is the air pressure inside of the vehicle tire, e.g., for the purpose of providing an indication of vehicle tire pressure. In such sensor assembly embodiment, it is necessary that the housing **12** be configured to include one or more openings to provide air flow communication between such external environment and the electrical sensor device **40** disposed within the housing internal cavity **38**. With reference to FIGS. **1** and **2**, the sensor assembly **10** comprises the housing **12** that is configured to include an opening **98** positioned along the top cover **22**. The opening **98** is configured and positioned to enable air outside of the housing to reach the internal cavity **38** and the electrical sensor device **40** disposed therein. It is well known that moisture and other contaminants exist within the assembly of a vehicle pneumatic tire and wheel with proper operating temperature. Therefore, for purposes of protecting the electrical sensor device **40** from such contaminants, it may be desired that a moisture barrier **100** be positioned within the opening **98** or within a cavity or the like that is interposed between the opening **98** and the electrical sensor device **40** for the purpose of permitting only filtered air to reach the electrical sensor device **40**. In an example, the moisture barrier **100** may be in the form of a filter element or a molecular sieve, and may or may not be configured to be removable and/or replaceable.

FIG. **10** illustrates an example sensor assembly housing **120** that includes a top cover **22** configured to include an opening **98** therethrough to permit air from the external environment, e.g., the air within a pneumatic tire when the sensor assembly is disposed within a vehicle tire, to access the internal cavity **38** and the electrical sensor device **40** disposed therein. In this example, the housing top cover **22** includes a cavity **124** that is downstream from the opening **98** and that includes a moisture barrier **100** disposed therein. In this example, the cavity **124** and moisture barrier **100** are positioned adjacent a sensor **126** of the electrical sensor device **40** that is configured to sense the pressure of the air. As noted above, configured in this manner, only filtered air reaches the electrical sensor device **40** and sensor **126**.

In an example embodiment, the electrical sensor device **40** disposed within the sensor assembly housing **12** may comprise a variety of different electrical components as called for by the particular end-use application and types of operating parameters to be measured, monitored and/or determined. In an example, with reference back to FIG. **5**, the electrical sensor device **40** may comprise a number of components that may include a printed circuit board **130**, one or more sensors **126** configured to measure operating parameters such as tire shape such as the outside, free, or rolling radius/diameter or tire depth, operating conditions, orientation, and/or location and the like, one or more transmitters **132**, one or more antennas **134** for wireless trans-

mission of the monitored operating parameters from the electrical sensor device **40** and for wireless receipt of information from an external device, a portable power source or battery **64**, and all necessary electrical connections and circuitry. It is to be understood that the electrical sensor device **40** as disclosed herein may be configured differently depending on the particular tire data or operating parameters to be monitored, and this is but one example of the same for purposes of reference and example.

In an example, the portable power source **64** may be in the form of a lithium ion or nickel metal hydride battery. Alternatively, the electrical sensor device **40** may be designed in such a manner so as to receive power through the kinetic energy forces of the tire movement. In such variation, the functionality of the electrical sensor device **40** may be minimized due to limitations of the power source. Therefore, it is preferred that sensor assemblies as disclosed herein comprise an electrical sensor device **40** that utilizes a lithium ion battery as is commonly used in the automotive industry and proven to achieve several years of use thereby enabling the sensor assembly **10** to be re-used between multiple sets of vehicle tires.

For pressure sensor assemblies as disclosed herein configured for use in a tire-mounted application, it is desired that the electrical sensor device **40** include at least one sensor **126** preferably a microelectromechanical (MEMS) pressure and temperature sensor as is common in traditional TPMS devices. Utilizing pressure and temperature sensors along with other necessary components, the sensor assembly can communicate conditions of the tire with a receiver such as the vehicle ECU, a mobile device, or the like. As indicated, these sensors are well utilized throughout the automotive industry and therefore for advancement of tire technology it is preferred that the electrical sensor device **40** possess additional sensors and functionality including and not limited to accelerometers, gyroscopes, RFID tag, SIM, and/or GPS technology. In the circumstance of the electrical sensor device **40** including an accelerometer, the sensor assembly can be utilized for analyzing advanced tire conditions such as and not limited to traction, alignment variations, tire shape such as the outside, free, or rolling radius/diameter and/or tire tread depth, and load, e.g., radial load. In another variation, the electrical sensor device **40** configured to include gyroscope sensor technology would enable the calculation of tire orientation such as for slip angle or oversteer measurements which are of particular importance in the motorsports industry. The gyroscope may be used to provide tire alignment information such as toe and/or camber position, and well as being useful for determining tire tread depth. Further, the electrical sensor device **40** configured to include GPS technology is of significant value for loss prevention of tires and/or vehicles as are susceptible to theft.

In an example, it is desired that the electrical sensor device **40** be configured to include electrical components that enable minimal storage capability. Though the majority of the raw data collected from the sensor(s) of the electrical sensor device will be transmitted through wireless communication to a receiver(s) and/or cloud-based system, storage capacity by the electrical sensor device **40** is very desired and useful. In an example, it is desired that the storage capacity be read/write capable to support over writing of non-essential data. In an example, it is desired that the storage capacity of the electrical sensor device **40** support firmware updates or similar functions common with electronic units. In the particular circumstance of use as a tire sensor assembly, the storage capacity will contain information such as the sensor identification number and/or or unique protocol information through which the sensor is capable of communicating with the vehicle ECU. Further still, with storage capacity the sensor assembly can contain vehicle information such as the Vehicle Identification Number (VIN) which can be utilized for tracking and security purposes such as by fleet business or regulatory authorities like the Department of Transportation.

In an example, the electrical sensor device **40** may comprise connectors through which firmware updates or data which is stored in the device may be transmitted to and/or from an external device such as a receiver or cloud-based system or the like. However, in a preferred embodiment, it is desired that the electrical sensor device **40** comprise one or more antennas **134** through which information can be communicated wirelessly. Such feature of wireless information/data transmission to and/or from the electrical sensor device **40** to a remote device is of particular advantage when the sensor assembly comprising the same is attached within a pneumatic tire, mounted to a wheel and vehicle wherein the sensor assembly is not easily accessible for the use of connectors. The use of LF/RF technology as is common with direct TPMS units located within the mounted tire and wheel assembly or BLE communication as found with valve-stem cap-mounted aftermarket TPMS devices are preferred though other forms of wireless communication may be utilized.

FIG. **11** illustrates an example of the different components that may be used with sensor assemblies and electrical sensor devices **40** disposed therein as disclosed herein. In such example, the electrical sensor device **40** may comprise one or both of an BLE antenna **140** and an LF antenna **142** to support traditional RF communication **144** and **145** with an ECU **146** of the vehicle as well as Bluetooth communication **148** with one or more receivers **150** such as mobile phones, tablets or smartphone-based vehicle information systems like Apple CarPlay or the like.

FIG. **11** also illustrates the use of additional components which may not be necessary in all variations of sensor assemblies and systems as disclosed herein. One such component is a button **152** which is useful for developers and manufacturing operations for activating or resetting a master control unit (MCU) **154**. The electrical sensor device **40** may also contain an LED **152** to provide a visual indication that the device **40** is active and connections as aforementioned are relevant for development and firmware updates. FIG. **11** also depicts two primary components functioning as the MCU, BLE and TPMS units **154** and **156** (where the MCU and BLE units may be provided in the form of an integrated unit), which are utilized in an example embodiment though may not be necessary in other variations that still fall within the scope of sensor assemblies and systems as disclosed herein. In an example, a portable power source **157** is provided in the form of a lithium coin battery to provide power to one or all of the MCU/BLE and TMPS units **154** and **156**. FIG. **11** also features the printed circuit board (PCB) and multiple frequency antennas **158** as are used for communication with a vehicle ECU **146**. It is preferred for the electrical sensor device **40** to contain components supporting multiple frequencies (i.e. 315 MHz and 433 MHz) which can communicate universally with all vehicles on a global scale so-as to reduce manufacturing variation as well as inventory commonly stocked by wheel and tire shops. Additionally, the electrical sensor device **40** may include a processor (not shown) for purposes of processing data received from sensors or data received wirelessly from an external transmitter.

In an example embodiment where the electrical sensor device **40** comprises a number of sensors **126**, the traditional vehicle ECU **146** is not capable of processing data beyond temperature and pressure communication from the sensor assembly. Therefore, a secondary wireless receiver with RF, BLE or similar capability, configured to receive the wireless signals provided from the electrical sensor device, is useful for the purposes of being able to access and process advanced dynamic object, e.g., tire, analytics. However, it is intended that with the development of sensor assemblies as disclosed herein, automobile manufacturers will integrate receiving capability of the advanced data provided by the sensor assembly to the vehicle ECU for convenience of drivers as well as to further the capability of autonomous vehicles which rely almost entirely on data transmitted from sensors. Therefore, the systems described herein can still fully operate within the single wireless communication method (LF/RF) that is generally used by the industry today.

In an example, the sensor assembly retainer **14** may be made from materials that facilitate a secure attachment with the housing **12**, and that promotes a strong adhesive attachment with the target surface of a vehicle tire. In an example, the material may be selected to support mechanical attachment and/or chemical bonding with housing **12**. In an example, the material selected for forming the retainer **14** may be one that is capable of absorbing shock and/or forces such as deformation or the like commonly experience in a vehicle tire for the purpose of minimizing or mitigating the transmission of such forces to the housing **12** and the electrical sensor device **40** disposed therein to thereby extend the effective service life of sensor assemblies as disclosed herein. In an example, the retainer **14** may be formed from materials including, but not limited to, EPDM rubber, natural, butyl or similar rubber compounds such as is common with tire patches and that provide resistance to weather, water, greases, and acids, and that maintains sufficient flexibility in varying temperature conditions which are found to range beyond −50° F. to 250° F. in common consumer and beyond for motorsports tire applications.

In an example, using a material having shock absorbing properties for forming the retainer **14** enables the use of a rigid plastic material for forming the housing **12** as is commonly found with traditional direct TPMS sensor devices. These materials may be of preference for forming the housing **12** due to manufacturing cost savings. Without having a separate retainer **14** and the ability to form the retainer **14** from a shock absorbing material selected to promote attachment to the vehicle tire, the rigid housing **12** and electrical sensor device **40** would be susceptible to failure and/or damage to the electrical sensor device **40**, failed bond with the tire, and/or excessive resistance to flexibility of the tire rubber where the sensor assembly unit is affixed. Naturally these conditions present functionality and safety concerns. As such, a feature of sensor assemblies as disclosed herein is the ability to select the material for making the retainer **14** so as to minimize, mitigate, and/or eliminate such functionality and safety concerns.

In an example, where the retainer **14** may be bonded with the housing **12**, it is desired that the material selected for forming the retainer **14** be one that is compatible with and promotes a desired bond strength with housing **12** in the event that the housing **12** is chemically bonded with the retainer **14**. In the circumstance of chemical bonding between the retainer **14** and housing **12**, commonality of material is desired to ensure durable connection between the components. In such example, it may be desired to make the retainer **14** and housing **12** each from EPDM rubber to support the use of a rubber bonding adhesive such as a cyanoacrylate, pressure-sensitive, or chemical vulcanizing agent as is common in the tire patch and repair industry.

Alternatively, in the circumstance where different materials are used for forming the retainer **14** and the housing **12**, e.g., where the retainer **14** is made from EPDM rubber and the housing **12** is made from rigid plastic or metal, it would be desired to utilize complimentary shapes for the purpose of providing a mechanical attachment between the retainer **14** and housing **12**. In such an example (as illustrated in FIGS. **1**, **6** and **7**), attachment of the housing **12** to the retainer **14** would rely on mechanical fixturing techniques that may include complementary surface features and/or the use of additional attachment elements such as dowels, screws, rivets or the like.

The examples illustrated in FIGS. **1**, **6** and **7** rely on a mechanical mating of the housing **12** within the open chamber **52** or pocket of the retainer **14**, wherein the retainer **14** comprises a wall structure **16** that complements that of the housing wall structure **34** to accommodate placement and mechanical retention of the housing **12** within the retainer **14** by means of contact between the complementary adjacent wall structures. In an example, it is desired that the housing **12** be attached to the retainer **14** through the use of a mechanical attachment for purposes of being able to readily remove and reuse the housing **12** and electrical sensor device **40** therein (e.g., when placed within a tire) to facilitate removal from an old, worn and/or failed tire and installation into a replacement tire. This is especially desired when sensor assemblies as disclosed herein are used in tires placed into use in the motorsport industry where tires are replaced frequently.

That said, the mechanical bonding of the retainer **14** and housing **12** containing the electrical sensor device **40** would permit transfer of the critical and costly components to another vehicle tire such as when the retainer **14** is permanent affixed to the vehicle tire. Other variations of mechanical mating the retainer **14** and housing **12** may be utilized, however, the 'pocket' technique is the preferred variation as this does not require the use of tools for application or removal. A desired feature of the retainer **14** and housing **12** mechanical attachment configuration illustrated in FIGS. **1**, **6** and **7** is that such permits the removal of the housing **12** from the retainer **14** without having to use special tools. Further, there may be an instance where the retainer **14** is vulcanized to the rubber article, such as during the green tire manufacturing process. In this instance the retainer **14** is permanently affixed to the tire and cannot be used in another tire vehicle. In such case, mechanical attachment of the housing **12** to the retainer **14** is desired to enable removal of the housing **12** therefrom for reuse in another tire.

In an example, the retainer **14** is configured to be affixed to a target surface of an already vulcanized rubber article **30**, e.g., a vehicle tire, utilizing an adhesive layer **160** (as shown in FIG. **1**). In a preferred embodiment, the adhesive chosen for affixing the retainer **14** to the vulcanized rubber article **30** is a cyanoacrylate adhesive given the adhesive's permanent rubber bonding and fast drying properties which are of interest in high volume applications, though other comparable chemical or heat vulcanizing adhesives may be selected. In this circumstance, the housing **12** would be removed from the retainer **14** since the bond between intermediate absorption layer and rubber article is intended to be permanent. Alternatively, pressure sensitive adhesives may be used to support ease of removal of the entire sensor assembly (including the retainer) from the vulcanized rubber article for use in another application. In the situation where

the vulcanized rubber article is a vehicle tire, this feature of ease of removal and reuse of the housing **12** and the electrical sensor device **40** disposed therein is of particular significance given that the frequency in which tires are replaced is higher than that of the life of the power source for the electrical sensor device **40**.

For use of sensor assemblies as disclosed therein, there are several methods that may be utilized for attaching the sensor assembly **10** to a target surface of a vulcanized rubber article **30**. As previously discussed, the retainer **14** as the connection between the rubber article and the housing **12** and electrical sensor device **40**. The retainer **14** can be affixed to the rubber article **30** through what is referred to as pre-cure or post-cure bonding. In pre-cure bonding, the retainer **14** is applied to a target surface of the uncured rubber article and cured along with the rubber article. This is commonly referred to the green tire process in the case which the rubber article is a vulcanized rubber article. It is a common variation to incorporate the use of heat cure adhesives to support the bond between the uncured retainer **14** and uncured rubber article in the circumstance that different elastomeric materials are selected. The pre-cure bonding technique is of preference for high volume production, to ensure consistency and quality of retainer **14** to the rubber article permanent bonding.

This pre-cure bonding technique, however, is a disadvantage in many respects as well. Because the pre-cure method requires vulcanization with the rubber article, it is generally necessary to produce a new mold. In the circumstance of tire manufacturing, mold production comes at a significant cost exceeding tens of thousands of dollars, and therefore it would be necessary to produce hundreds of thousands of tires to recognize a return on investment. In addition, if bonding of the retainer **14** is achieved during the pre-cure process then the ability to use sensor assemblies as disclosed herein could depend on the rubber article manufacturer rather than the user, e.g., one rubber article manufacturer may make tires with the retainer **14** while another rubber tire manufacturer may not make tires with the retainer **14** that would prevent use of the sensor assembly control.

Therefore, it is an alternative and preferred technique to achieve bonding of the retainer **14** and rubber article **30** in a post-cure method. As previously discussed, this can be done in a permanent manner utilizing heat, chemical or similar curing adhesives as well as pressure sensitive adhesives for a temporary bond. In this circumstance, it is desired to properly prepare the target surface of the vulcanized rubber article **30** which will support a proper bond. In the circumstance of a new vehicle tire, the target surface is likely to contain contaminants including waxes, oils, and mold release agents utilized in the manufacturing process.

FIG. **12** illustrates an example sensor assembly **10** as attached to a target surface **170** of inside portion of a vehicle tire **172** by the use of a suitable adhesive by post-cure method. In an example, before attaching the sensor assembly **10** the target surface **170** is treated for removal of contaminants, which may be done by using cleaning products and/or solvents **174** common in the tire and rubber industry such as pre-buff, degreaser, acetone, rubbing alcohol or similar and a clean towel or rag **176**. It is also common, though not necessary, to roughen the surface of the rubber article which can be done with a common sand paper or the use of a specialized tool like a stitcher, roughener, dremel or similar. Roughening the surface can assist in the bond strength given the use of particular adhesives such as those common to the retread industry, however, other adhesives can achieve the intended bond without this roughening step. When the roughening technique is utilized, it is generally necessary to follow this step with the aforementioned cleaning technique. Further still, it may be necessary to remove tire insulation foam or similar materials which are known to be used by tire manufacturers for the purpose of noise dampening.

One further variation in the preparation of the target surface **170** includes marking the rubber article. This technique can be helpful in assembly line scenarios where the operator or machine cleaning and or roughening the surface may not also be applying the adhesive **160** and retainer **14**, and therefore the area must be identified for the next stage of the assembly line. Alternatively, the rubber article may be cleaned and or roughened at one particular time, staged, and at a later time collected for application of the adhesive **160** and retainer **14**.

Further, referring to FIG. **12**, it may be of particular preference to place the sensor assembly **10** in a particular orientation and/or position on the rubber article surface **170** such as to compliment the rotational direction of a vehicle tire **172**. In an example, the sensor assembly may be attached to the rubber article surface **170** inside the tire that is opposite the tire outside surface or tire tread, and in a particular example the attachment surface may be centrally located between opposed sidewalls of the tire. However, it may be desired to mount the sensor assembly at a different location within the tire depending on the particular tire parameters and/or operating conditions to be monitored. For the above circumstances and those not mentioned, the application method may incorporate marking of the rubber article.

Once the surface of the rubber article has been properly prepared, the retainer **14** and adhesive layer **160** are bonded to the vulcanized rubber article. Depending on the chosen adhesive and other factors such as the skillset of the person or machine applying the retainer **14**, the adhesive layer may be applied to the target surface **170** of the rubber article or to a bottom surface **28** of the retainer **14** or both. In the circumstance where the adhesive is pressure sensitive, it may be preferred to apply the adhesive layer to the bottom surface **28** of the retainer **14** such as through the technique of lamination. In this situation, lamination of adhesive to the retainer **14** can take place in the manufacturing process of the retainer **14** and at a later time and by an unrelated party. With reference to FIG. **13**, the adhesive layer **160** can be easily activated for application with the rubber article, e.g., by removing a release liner **178** therefrom to thereby expose the adhesive layer surface.

In another example, the adhesive layer **160** may be applied to the surface of the rubber article directly. This can be done with nearly any variation of adhesive including but not limited to heat-activated, chemical cure or 2-part epoxy adhesives. An example where this approach may be of preference such as when the area of the rubber article chosen to receive the retainer **14** is clearly defined or when the adhesive possesses a low viscosity.

Once the adhesive layer has been applied and rubber article target surface properly prepared, the connection between the retainer **14** and rubber article can take place. At this point, the housing **12** and electrical sensor device **40** disposed therein may or may not be attached with the retainer **14**. In the circumstance where the adhesive chosen is a heat-activated method, it would be preferred that the housing **12** is not affixed to the retainer **14** during the retainer attachment process as the curing process of the adhesive may require an elevated temperature beyond a threshold which the housing **12** and/or electrical sensor device **40** may withstand. Alternatively, a select adhesive may require sig-

nificant use of pressure to achieve activation and lasting bond. This pressure may result in damage to the housing **12** and/or electrical sensor device **40** disposed therein and for this reason should not be attached with the retainer **14** during the step of attaching the retainer **14** to the rubber article. Still further, the bonding of the retainer **14** and rubber article may require the use of tooling whether by hand or machine, which may not be adapted to the profile of the housing **12**. For these and other reasons not mentioned, in an example embodiment the step of attaching the retainer **14** to the rubber article is carried out without the housing **12** attached within the retainer **14**.

Alternatively, it may be desired to bond the rubber article with adhesive to the entire sensor assembly; the retainer **14** as containing the housing **12** and the electrical sensor device **40** disposed within the housing **12**. In this embodiment, the entire sensor assembly **10** can be bonded to the rubber article using a select adhesive without the need to later affix or attach the housing **12** to the retainer **14**. This option may be of particular use when the application of the sensor assembly is performed by a consumer and reducing the number of required installation steps is preferred. With reference to FIG. **14**, in an example, this option of installing the sensor assembly **10** with the housing **12** attached within the retainer **14** may be done by a user applying pressure to the sensor assembly **10** by their hands **180**, e.g., by using hand pressure. As indicated previously, the sensor assembly **10** may alternatively be affixed to the rubber article using tooling which is of preference with high volume operations, use of machinery, and or when forces, temperatures or conditions exceed the capability of hand application.

As referenced, the sensor assembly housing **12** may be used for multiple purposes including ways related to the method of application. In an example shown in FIG. **1**, the housing top cover **22** may include a display feature **32** configured to assist with installation, e.g., providing a desired installation orientation in which the sensor assembly **10** is to be attached and used relative to the rubber article. This may relate to the rotational direction of the tire or a particular orientation which supports more robust communication with the electrical sensor device **40** disposed within the housing **12**. In another variation shown in FIG. **1**, the housing top cover **22** comprises a display feature **32** that contains information such as a unique identifier which is used for setup and functionality of the sensor assembly **10**. This unique identifier could include an electronic identification number through which receivers associate the sensor assembly for use in the sensing system such as identifying a particular vehicle tire from another. Still further, the housing display feature **32** may provide specification information such as an FCC ID or similar certification information about the electrical sensor device contained within. These are but a few examples of how the sensor assembly housing may include information useful to install and or use the sensor assembly.

Once the sensor assembly **10** is affixed to the rubber article, there is a method for removing the housing **12** and electrical sensor device **40** from the retainer **14** and rubber article, and reusing the same with a different rubber article. This is of particular importance when the rubber article is a vehicle tire which has a fixed lifespan that is generally shorter than that of the power supply of the electrical sensor device **40**. In this scenario, the housing **12** is preferably mechanically affixed to the retainer **14** and easily removable therefrom. To promote reuse of the housing **12** and electrical sensor device **40**, a new retainer **14** and adhesive are used to affix the retainer to the new tire, or perhaps the new tire already possess retainer **14** which was pre-cured with the rubber article as described above. In another embodiment, the entire sensor assembly **10** including the retainer **14** and housing **12** may be removed from the old tire and placed into a new vehicle tire or rubber article, e.g., through reuse of the existing adhesive or use of a new adhesive layer.

It is desired, such as for automotive aftermarket use of the sensor assembly, that the aforementioned application methods are selected through which jobbers and consumers are empowered to apply and utilize sensor assemblies as disclosed herein. However, pressure assemblies as disclosed herein may also be made and used at the rubber article manufacturing level. This approach supports mass distribution through traditional channels such as tire dealers and warehouses and supports efficiency and quality of the application of the sensor assembly. Therefore, as shown in FIG. **15**, it is intended to be within the scope of sensor assemblies as disclosed herein the combination of sensor assemblies **10** with variations of a rubber article, such as a vehicle tire **190**, which may already be equipped with the sensor assembly **10** by way of the methods aforementioned.

Lastly, the sensor assemblies and systems as disclosed herein comprise a sensing system that is designed to measure, monitor, and/or determine, and/or report operating parameters and/or conditions, orientation and/or the location of a vulcanized rubber article such as a vehicle tire. The sensing system comprises of the aforementioned components and methods including and not limited to:

A sensor assembly **10** comprising a housing **12**, an electrical sensor device **40** within an internal cavity **38** of the housing **12**, and a retainer **14** that is attached together with the housing **12**;

- applied to the vulcanized rubber article such as a vehicle tire;
- by method of surface preparation and pre-cure or post-cure adhesion;
- which communicates with one or more receivers having a plurality of antennas capable of receiving and sending wireless communication.

While example sensor assemblies as disclosed herein have been described above and configured for attachment with a dynamic rotating object, and more specifically for attachment with an inside portion of a pneumatic tire, it is to be understood that sensor assemblies as disclosed herein may be configured to accommodate attachment with an element, object or article attached or otherwise connected with the dynamic rotating object that also is a dynamic rotating object. In an example where the dynamic rotating object is a pneumatic tire, the sensor assembly may be configured for attachment with a wheel that the pneumatic tire is mounted with, or may be configured for attachment with a valve stem that is connected with such wheel. In each such case the wheel and valve stem are dynamic rotating elements that rotate with the pneumatic tire. In each such case, the sensor assembly may be modified to properly affix to the alternative surface or object and still fall within the scope of the invention. For example, rather than using an adhesive layer to affix the sensor assembly to a vehicle tire, the sensor assembly can be affixed to the valve-stem position mechanically. In an alternative example when affixed to the valve-stem position, the sensor assembly can be comprised of a rigid material within risk of damage to the electrical components since the valve-stem position does not experience the same deformation as the vehicle tire position. It is to be understood that all such alternative constructions of the sensor assembly is within the scope as disclosed herein.

FIGS. **16** to **18** illustrate example sensor assemblies as disclosed herein that are configured for attachment with a wheel or valve stem that is mounted or otherwise connected to rotate with the dynamic rotating object, e.g., a pneumatic tire. FIG. **16** illustrates an example sensor assembly **200** as disclosed herein, configured to include the sensor device elements and the like disclosed above, and configured to attach to an inside diameter surface **202** of a wheel **204** on which a pneumatic tire **206** is mounted. As illustrated, the sensor assembly **220** is positioned such that it is exposed to the internal cavity **208** of the tire **206** and radially opposed from an inside surface **210** of the tire that is opposite the tire outside diameter surface **212** and tread **214**. FIG. **17** illustrates an example sensor assembly **220** as disclosed herein, that configured in the manner and comprising the sensor device elements disclosed above. In this example, the sensor assembly **220** is attached to a valve stem **222** that extends through an inside diameter surface **224** of a wheel **226** on which a pneumatic tire **228** is mounted. As illustrated, the sensor assembly **220** is positioned such that it is exposed to the internal cavity **230** of the tire **228** and radially opposed from an inside surface **232** of the tire that is opposite the tire outside diameter surface **234** and tread **236**. FIG. **18** illustrates an example sensor assembly **240** as disclosed herein, that configured in the manner and comprising the sensor device elements disclosed above. In this example, the sensor assembly **240** is attached to a valve **242** that extends through an inside diameter surface **244** of a wheel **246** on which a pneumatic tire **248** is mounted. Unlike the example illustrated in FIG. **17**, the valve extends through an angled section **250** of the wheel inside diameter surface **244**. As illustrated, the sensor assembly **240** is positioned such that it is exposed to the internal cavity **246** of the tire **248** and radially opposed from an inside surface **250** of the tire that is opposite the tire outside diameter surface **252** and tread **253**. Alternatively, the sensor assembly **240** as disclosed herein, may be configured for positioning external to the wheel and tire cavity. In one such example, the sensor assembly may be configured for attached with a portion of the valve stem extending outwardly from the wheel, e.g., configured for attachment with the valve stem in the form of a valve stem cap or the like. Such sensor assembly placement position would still require the sensor assembly be oriented in a manner such that it is exposed to the Earth's gravitational force and the radial forces from rotation of the dynamic object. The valve-cap position simply allows for ease of access to the sensor assembly **240**.

Sensor assemblies configured and mounted in the manner illustrated in FIGS. **16** to **18** within a pneumatic tire function to provide the tire operating parameters and/or conditions described above for the earlier-discussed sensor assemblies. For example, sensor assemblies mounted as illustrated in FIGS. **16** to **18**, include one or more accelerometer disposed therein having an axis oriented to sense the Earth's gravitational force and the radial force of the rotating object, in this case a pneumatic tire, which is useful for monitoring among other things the tire shape such as the outside, free, or rolling radius/diameter and/or tread depth.

While FIGS. **16** to **18** illustrated alternative placement positions for sensor assemblies as disclosed herein for use with a dynamic rotating object such as a pneumatic tire, it is to be understood that sensor assemblies and systems as disclosed herein are also intended to be used in applications where the dynamic rotating object is solid or otherwise does not include an internal cavity, e.g., such as with solid metallic wheels, rubber tires, cushion tires, and the like. In such end-used applications, sensor assemblies as disclosed here may be attached to a portion of the rotating dynamic object, or another element attached to the rotating dynamic object so it also rotates with the rotating dynamic object, radially inwardly from the outside diameter of the rotating dynamic object so that the accelerometer is oriented to sense the Earth's gravitational force and the radial force of the dynamic rotating object. The sensing system relies on wireless communication techniques to relay data, commands, updates, and similar between the electrical sensor device **40** within the sensor assembly **10** and the receiver(s). Common examples of the wireless communication applicable useful in the automotive market segment and TPMS sensors include Bluetooth Low Energy (BLE) and low frequency (LF) radio frequency (RF). Modern technology is also allowing for telecommunication such as through 5G service, directly to cloud-based systems. These communication methods are utilized for connection between sensors and receivers utilizing a plurality of antennas.

Referring back to FIG. **11**, the sensor assembly and system as disclosed herein is capable of transmitting and receiving BLE **148** for communication with mobile devices **150** used by the vehicle driver, as well as RF for LF communication **144** and **145** with the vehicle ECU **146**, which then relays information to the user dashboard. This dual communication system is preferred given the plurality of conditions which traditional vehicle computer systems are not equipped to receive. For example, traditional TPMS sensors relay conditions of temperature and pressure to the vehicle ECU which is communicated with the driver through signals on the dashboard to similar interface. However, most vehicles are not capable of receiving additional sensor conditions such as accelerometer data or cannot translate this data into meaningful information to display to the driver. This presents a barrier given the complexity of programming and fact that control of vehicle ECU development is generally held by the vehicle manufacturers. It is known that at some time, vehicle manufacturers will incorporate advanced tire information into the vehicle ECU and dashboard. However, this change will likely take years and will constantly be behind the technology. Therefore, sensor assemblies and systems as disclosed herein operate to address this limitation by incorporating a second form of communication for the sensing system such as BLE which is commonly utilized by other receivers such as smart phones, tablets, vehicle systems like CarPlay, etc., and through which data can easily be accessible with applications.

An alternative technique relying solely on one form of communication such as RF is to utilize a receiver which is programmed to collect and translate the information. This could be the vehicle ECU or a 3rd-party receiver which could be plugged into the cigarette lighter or USB connection for power or hardwired to the vehicle electrical system such as with fleet vehicles, all of which would need to be adapted to translate the communication into meaningful information and fulfill the purpose of the sensor assembly and systems as disclosed herein. This receiver in turn could also transmit the information to one or more receivers or even a cloud-based system utilizing the same form of communication or perhaps an alternative signal such as telecommunications like 5G. For example, the sensor assembly may transmit through RF communication to a receiver, which then transmits information to a 2nd receiver using BLE communication or perhaps to a 2nd receiver over USB wired connection. There are any number of combinations that one skilled in the art can develop which would still fall within the scope of sensor assemblies and systems as disclosed herein. As indicated, in an example embodiment,

the sensing system utilizes dual wireless communication protocols as such is advantageous until automotive manufacturers begin to incorporate functionality of translating the data from the sensor assembly into meaningful information from which drivers and the vehicle can rely.

Expanding on this variation of sensor assemblies and systems disclosed herein, sensing systems are also capable of replacing traditional TPMS devices. When setting up a traditional TPMS device, it is critical that the unique protocol of the particular vehicle is used to ensure proper communication between the sensor and vehicle. When the protocol is designated, the vehicle needs to be 'taught' to find the sensor(s) and assign the signal to a particular tire. The process is often complex and only performed by wheel and tire experts with specialized tools. To avoid the process of relearning sensors, one common technique is to clone the ID and or protocol of the original TPMS sensor and assign this to new sensor. Through the cloning process, the vehicle continues to identify the tire using the original unique ID of the sensor transmitted by the RF communication, typically 315 MHz or 433 MHz frequency. Many TPMS sensors even incorporate both signals and multiple protocols to reduce inventory and complexity.

As a direct replacement for traditional TPMS sensors, the sensor assemblies and systems as disclosed herein utilize the same industry standards and techniques for programming the sensor assembly for ECU communication. Therefore, the vehicle ECU is capable of receiving standard conditions such as temperature and pressure as designed by the OEM while the additional information is relayed to another receiver. However, it is the unique and preferred variation of sensor assemblies and systems as disclosed herein that the programming techniques typically reliant on RF communication from specialized receivers, can alternatively be performed over a secondary form of communication such as BLE from a mobile device. In an example embodiment utilizing dual communication, a vehicle owner can assign the designated protocol information during the vehicle selection process in a mobile application which would then be transmitted over BLE to the electrical sensor device **40** of the sensor assembly **10** which then programs the protocol and communicates over RF to the ECU. The mobile device or similar can similarly be utilized to clone the unique ID of the original TPMS sensor, send the information of BLE to the electrical sensor device for programing and RF communication with the ECU. Through this method, sensor assemblies and systems as disclosed herein empower users to eliminate the need for expensive TPMS tooling and specialized training. As mentioned, however, as receivers (e.g. ECU) are adapted to accept additional information (e.g. accelerometer data, tread depth results, tire load) there would not be the necessity of dual wireless communication and still fall within the scope of the sensor assemblies and systems as disclosed herein.

Beyond unique use of communication protocols, sensor assemblies as systems as disclosed herein provide a method through which critical wheel and tire conditions are evaluated, specifically critical safety and performance conditions like tire shape such as the outside, free, or rolling radius/diameter and/or tread depth, radial load and alignment. Whereas conventional approaches demonstrate evaluation of tread depth, radial load and alignment conditions through the use of camera systems or measuring acoustics, the sensor assemblies and systems as disclosed herein evaluate these conditions utilizing raw sensor data from the electrical sensor device **40** of the sensor assembly **10**.

To evaluate these conditions, using sensor assemblies and systems as disclosed herein, to rely accelerometer data and the technique of measuring the rotations per second (RPS) of a particular tire at a given speed to calculate the shape such as the outside, free, or rolling radius/diameter of said tire. Using known manufacturing specifications for tire models, the shape such as the outside, free, or rolling radius/diameter of said tire will generally indicate the health and remaining service life of the tire, or may be used to determine the tread depth related health and remaining service life of the tire. It is an alternative technique to utilize gyroscopic data to calculate the shape such as the outside, free, or rolling radius/diameter of the tire based on the path of the gyroscope and known position of the sensor assembly within the tire. Similarly, this data can be utilized to calculate camber and/or toe angle measurements to determine alignment variation.

As earlier noted, a feature of sensor assemblies and systems as disclosed herein is the ability to use the same for monitoring operating parameters and conditions of the dynamic rotating object such as the tread depth of a tire. FIG. **19** is a flow chart illustrating an example methodology for determining tire tread depth using sensor assemblies and systems as disclosed herein. In an initial step **300** the sensor is checked to confirm it is correctly setup and assigned a tire location. Then **302** the sensor is checked by a receiver to confirm it is discoverable by the system. Next **304** information from the sensor is evaluated to determine tire pressure, and in an example, to check if the tire pressure is within about 15 percent of a recommended tire pressure. Step **304** is used to ensure the tire pressure is within a tolerance so-as not to affect the resulting tread depth calculation. Alternatively, a correction coefficient can be utilized in the calculation to account for any tire pressure variation. The flowchart of FIG. **19** is simply providing an example of a system to calculate tread depth by maintaining tire pressure within a preferred range. Next **306** previous data/API (Application programming interface) data for the tire and the sensor are retrieved to provide necessary tire and vehicle specifications and/or previous measurements or baseline data from which the system can more accurately proceed with its calculations. Next **308** the speed/velocity condition is checked from a GPS sensor of the sensor assembly or by the GPS system of the receiver(s) to which the sensor assembly is in communicating with. If the GPS data is provided from the receiver, it is necessary that the raw data from the sensor and the GPS data are synchronized accordingly. Next **310** the system/receiver is connected with the sensor, and **312** a signal is sent from the receiver such as a mobile phone or vehicle ECU to command the sensor to initiate mass acceleration data collection. Next **314** speed data is collected for a specified test duration by the GPS-enabled sensor or external receiver such as a mobile device or vehicle ECU. Next **316** a signal is sent from the receiver to command the sensor to send the collected mass acceleration data from step **312**. Next **318** the system performs a filtering process and Fourier transform process on the collected mass acceleration data. Next **320** the system calculates the theoretical diameter of the tire from processed acceleration data and speed data. Next **322** the results from step **320** are stored by the system, and the results are evaluated to determine if they are sufficient for further analysis. Next **324** the results outside of a threshold of expected diameter tolerance are discarded. In an example, the expected diameter is derived from known manufacturer's tire specifications and/or previously calculated results. Next **326** the remaining results are evaluated to determine whether they are sufficient for purposes of further analysis. If the remaining results are not deemed sufficient,

then steps **312** to **326** are repeated until a desired sample size of remaining results are obtained. If the remaining results from step **326** are deemed sufficient, then **328** the system calculates the tread depth from the results, provides an output of the same and stores the determined tread depth.

The example process described above and illustrated in FIG. **19** is understood to be an example of but one way which sensor assemblies and systems as disclosed herein may operate to determine tread depth and that other and/or additional processes, steps and or methodologies may be used, which are understood to be within the scope this disclosure. For example, while the above process was one developed for monitoring the tread depth of a dynamic rotating element, it is to be understood that a similar process with adjustment may be used for monitoring the shape such as the outside, free, or rolling radius/diameter of a dynamic rotating element, e.g., in an application where the dynamic rotating element is a solid wheel or tire that does not have tread.

For the above-described example process illustrated in FIG. **19**, it is desired that the sensor and/or sensor accelerometer include or meet the following desired criteria. The sensor be mounted within the dynamic rotating object in the manner disclosed above. The sensor include a "two-way" radio connection, e.g., Bluetooth LE or the like. The sensor include an accelerometer with a measuring range of about 400 G or greater. The sensor accelerometer resolution be about 0.1 G or better. The sensor be mounted in a position where its accelerometer axis should sense Earth's gravitational force and the radial force of the dynamic rotating object. The sensor have an acceleration measuring frequency of about 40 Hz or greater. The sensor accelerometer be configured to collect and store at least about 100 measurements. The sensor be configured to retain measured data until uploaded to a host, e.g., vehicle, phone, etc. The sensor acceleration measuring interval be stable, e.g., better than 0.001 s. The sensor battery have sufficient power to repeatedly perform collection of measurements and communications to the host. These are examples of desired sensor operating parameters for purposes of performing the tread depth determination process illustrated in FIG. **19**, and it is to be understood that such sensor operating parameter can and may vary depending on a variety of factors, and that such variations are intended to be within the scope of sensor assemblies as systems as disclosed herein.

As earlier noted, a feature of sensor assemblies and systems as disclosed herein is the ability to use the same for monitoring operating parameters and conditions of the dynamic rotating object such the dynamic load placed on the dynamic rotating object. FIG. **20** is a flow chart illustrating an example methodology for determining the dynamic object load on a pneumatic tire using sensor assemblies and systems as disclosed herein. In an initial step **400** the sensor is checked to confirm it is correctly setup and assigned a tire location. Then **402** the sensor is checked to confirm it is discoverable by the system by wireless communication from a receiver such as a mobile device or vehicle ECU. Next **404** information from the sensor is evaluated to determine tire pressure, and a correction factor is assigned if needed. Next **406** if a correction factor is needed a correction coefficient is retrieved from the system and sent to the sensor. In an example, the correction coefficient defined as a coefficient used to adjust the formula for determining radial load based on the dynamic rotating object, e.g., tire classification. This coefficient varies depending on a number factors but it is essentially an expected behavior of the object under radial load. In the case of a pneumatic tire, the coefficient considers factors such as tire section width, aspect ratio, wheel size, load rating, etc. This coefficient enables proper consideration of the interval of radial deformation, velocity of the object and type of object being evaluated to then calculate the radial load estimation. For example, a large profile truck tire will behave (deflect) differently than a low profile high performance tire. The interval of deformation and velocity may be the same for these two tires, but knowing the behavior of the tire (correction coefficient) enables the proper assessment of the radial load for the given tire.

Next **408** the speed condition is checked by a GPS sensor of the sensor assembly or by a GPS system of the receiver(s) to which the sensor assembly is communicating with. If the GPS data is provided from the receiver, it is necessary that the raw data from the sensor and the GPS data are synchronized accordingly. Next **410** the system is connected with the sensor, and **412** a signal is sent from the system to command the sensor to initiate mass acceleration data collection. Next **414** speed data is collected for a specified test duration by the GPS-enabled sensor or external receiver such as a mobile device or vehicle ECU. Next **416** a signal is sent from the system to command the sensor to send the collected mass acceleration data from step **412**. Next **418** the system performs a process on the data that filters frequencies, locates peaks, and calculates deflection interval or interval of radial deflection. The interval of radial deformation is defined as the time, length, period, etc., which the dynamic rotating object is experiencing radial deformation when compared to its 'free radius' or radius/diameter while rotating freely in space. Next **320** the system collects the processed deflection interval data, the pressure, the speed, and the system correction factors. Next **322** the system calculates the load and provides an output of the same and stores the determined load.

The example process described above and illustrated in FIG. **20** is understood to be an example of but one way which sensor assemblies and systems as disclosed herein may operate to determine dynamic object load on a rotating object and that other and/or additional processes, steps and or methodologies may be used, which are understood to be within the scope this disclosure. For the above-described example process illustrated in FIG. **20**, it is desired that the sensor and/or sensor accelerometer meet the same desired criteria describe above for the process illustrated in FIG. **19**. Additionally, the sensor assembly is mounted within the dynamic rotating object in the manner disclosed above where the sensor is mounted to tire for the purpose of sensing deflection of the object in rotation, e.g., radial deflection in a sidewall of a tire. It is known that the conditions of a vehicle tire are extreme and no two rotations of the tire are identical. Even in an environment where external factors like road conditions, temperature, moisture, etc., are controlled, the accelerometer and gyroscope data would vary due to pressure and temperature variations of the tire itself as well as always changing behavior of the rubber compounds. Therefore, the sensing system relies on complex filters and algorithms as well as multiple sample sets to perform tire diameter calculations and draw meaningful evaluation of tread depth and alignment conditions.

In an example embodiment, sensor assemblies and systems as disclosed herein activate the collection of accelerometer sample sets based on the speed of the vehicle. The speed of the vehicle is monitored using GPS speed and algorithms contained within a mobile device application, diminishing the burden of power consumption for the sensor assembly. Once the vehicle is determined to be traveling at a particular speed and maintains the speed for a particular

period of time, the accelerometer sensor is activated via BLE signal and collects sample sets. The raw data is transmitted back to the mobile device over BLE and the application undergoes the complex process of filtering out 'noise' (such as the impact of the sensor assembly and tire against the road) and converting the raw data to tire RPS and diameter utilizing mathematical techniques such as the fast furrier transformation (FFT) algorithm. Once the diameter is calculated, the information is stored and the process is repeated, typically multiple times, and results are compared to ensure the integrity each individual sample set. Using known tread depth specifications for the particular tire along with repeated processing the aforementioned calculations, the tread depth of the tire is determined.

In another variation, sensor assemblies and systems as disclosed herein include a GPS device or an RFID chip that is used to transmit the location of the tire. This feature is of particular functionality for fleet organizations that experience vehicle and/or tire theft as well as for evaluation of inventory.

Another feature of sensor assemblies and systems as disclosed herein is the storage and accessibility of the advanced tire parameters available from the sensing system such as for telematics. An example embodiment would have the information collected by the sensor assembly communicated over BLE or RF to a mobile device or receiver that is connected to the internet. The data can then be evaluated and information transmitted to a database such as the cloud. Over time, this database could be utilized for countless applications such as telematics, user-based insurance (UBI), regulatory (D.O.T.) and statistics, as well as by tire companies and automotive manufacturers to improve future products. In still another embodiment, the information transmitted by the sensor assembly is received by the ECU of an autonomous vehicle for adjustments to driving conditions and overall improvement of safety and performance.

The foregoing description and accompanying figures illustrate the principles, preferred embodiments and modes of operation of sensor assemblies and systems as disclosed herein. However, such sensor assemblies and systems should not be construed as being limited to the particular embodiments discussed above. Additional variations of the embodiments discussed above will be appreciated by those skilled in the art. Therefore, the above-described embodiments should be regarded as illustrative rather than restrictive. Accordingly, it should be appreciated that variations to those embodiments can be made by those skilled in the art without departing from the scope of the sensor assemblies and systems as defined by the following claims.

For example, the steps recited in any of the method or process descriptions may be executed in any order and are not limited to the order presented. Moreover, any of the functions or steps may be outsourced to or performed by one or more third parties. Modifications, additions, or omissions may be made to the systems, apparatuses, and methods described herein without departing from the scope of the disclosure. For example, the components of the systems and apparatuses may be integrated or separated. Moreover, the operations of the systems and apparatuses disclosed herein may be performed by more, fewer, or other components and the methods described may include more, fewer, or other steps. Additionally, steps may be performed in any suitable order. As used in this document, "each" refers to each member of a set or each member of a subset of a set. Furthermore, any reference to singular includes plural embodiments, and any reference to more than one component may include a singular embodiment. Although specific advantages have been enumerated herein, various embodiments may include some, none, or all of the enumerated advantages.

In the detailed description herein, references to "in various embodiments," "various embodiments," "one embodiment," "an embodiment," "an example embodiment," etc., indicate that the embodiment described may include a particular feature, structure, or characteristic, but every embodiment may not necessarily include the particular feature, structure, or characteristic. Moreover, such phrases are not necessarily referring to the same embodiment. Further, when a particular feature, structure, or characteristic is described in connection with an embodiment, it is submitted that it is within the knowledge of one skilled in the art to affect such feature, structure, or characteristic in connection with other embodiments whether or not explicitly described. After reading the description, it will be apparent to one skilled in the relevant art(s) how to implement the disclosure in alternative embodiments.

What is claimed:

1. A sensor assembly configured for attachment with an object that is rotated in use, the sensor assembly comprising:

a housing comprising an outer surface and an internal cavity that is enclosed within the housing;

an electrical sensor device that is disposed within the internal cavity and attached therein to prevent movement of the device within the internal cavity, wherein the internal cavity comprises an unfilled open space above or below the electrical sensor device in the housing, wherein the electrical sensor device is configured to sense, transmit and/or receive information regarding surrounding conditions, orientation and/or location when the sensor assembly is attached with the object and the object is rotated in use; and

a retaining member that is configured to accommodate attachment of the housing therewith, wherein the retaining member has an outside surface configured for attachment to rotate with the object when the object is rotated in use.

2. The sensor assembly as recited in claim **1**, wherein the housing outer surface includes one or more display features or indicia that are viewable to a user when the housing is attached with the retaining member.

3. The sensor assembly as recited in claim **1**, wherein the housing comprises a top cover, a wall structure, and a base section that define the internal cavity, and wherein the top cover, wall structure and base section may be formed from the same or different materials, and wherein one or more of the top cover, wall section, and base section may separate or integral with one another.

4. The sensor assembly as recited in claim **1**, wherein one of the top cover or base section is removably attached with the wall structure to facilitate installation and/or removal of the electrical sensor device from the internal cavity.

5. The sensor assembly as recited in claim **1**, wherein the electrical sensor device is attached within the internal cavity by one or more surface features within the cavity that contact the electrical sensor device to retain its position therein.

6. The sensor assembly as recited in claim **1**, wherein the electrical sensor device is encapsulated by the inner cavity of the housing during a process of making the housing that operates to retain the position of the electrical sensor device within the housing.

7. The sensor assembly as recited in claim **1**, wherein the housing and retaining member are configured having a complementary shape to facilitate attachment of the housing with the retaining member.

8. The sensor assembly as recited in claim 7, wherein the housing comprises a wall structure that surrounds the internal cavity, and wherein the retaining member comprises a wall structure having an open chamber that is configured to accommodate the housing wall structure therein to provide attachment therewith.

9. The sensor assembly as recited in claim 1, wherein the retaining member is formed from an elastomeric material that mitigates transmission of shock forces from the object to the housing when the retaining member is attached to the object and the housing is attached to the retaining member.

10. The sensor assembly as recited in claim 1, wherein the housing includes an opening through the outside surface to the internal cavity, and further includes a filter that is positioned to filter air passing into the internal cavity before reaching the electrical sensor device.

11. A sensing system comprising the sensor assembly as recited in claim 1, wherein the sensing system comprises a receiver that is external from the object and that is configured to receive data from the electrical sensor device by wireless communication.

12. The sensing system as recited in claim 11, wherein the electrical sensor device comprises an accelerometer sensor connected therewith and is configured to send data from the accelerometer sensor wirelessly to the external receiver.

13. The sensing system as recited in claim 12, wherein the object is a vehicle tire, and wherein one or more parameter selected from the group consisting of tire diameter, tire tread depth, tire radial load, slip, road or soil conditions, strain, vehicle camber and/or toe alignment is determined from the accelerometer sensor data.

14. The sensing system as recited in claim 13, wherein one or more of the tire diameter, tire tread depth, and tire radial load is determined from data including a specific rotational speed of the tire at a given vehicle velocity.

15. The sensing system as recited in claim 12, wherein the object is a vehicle tire and a radial load experienced by the tire is determined from data comprising an interval of radial deformation.

16. The sensing system as recited in claim 11, wherein the electrical sensor device or receiver comprises a global positioning device.

17. The sensing system as recited in claim 16, wherein the object is a vehicle tire and a location of the vehicle tire is determined from information provided by one or both of the global positioning device and interaction with the electrical sensor device.

18. The sensing system as recited in claim 11, wherein the electrical sensor device comprises a gyroscope.

19. The sensing system as recited in claim 18, wherein the object is a vehicle tire and information from the gyroscope is used to determine one or more parameter selected from the group consisting of tire alignment, tire orientation, tire radial load, and tire tread depth.

20. The sensor assembly as recited in claim 1, wherein the electrical sensor device comprises:

a printed circuit board comprising electrical circuitry;

a portable power source for providing power to the electrical sensor device;

at least one sensor element; and

an antenna for receiving and/or transmitting information from the electrical sensor device.

21. The sensor assembly as recited in claim 20, wherein the electrical sensor device comprises one or both of a storage element and a processor.

22. The sensor assembly as recited in claim 20, wherein the electrical sensor device comprises one or both of an accelerometer sensor and a global positioning device.

23. The sensor assembly as recited in claim 20, wherein the sensor element is configured to sense one or more variables selected from the group consisting of air pressure, temperature, acceleration, and orientation or location of the environment, the sensor assembly, or the object.

24. The sensor assembly as recited in claim 20, wherein the object is a vulcanized rubber vehicle tire, and wherein the retaining member is attached to an inside surface of the vehicle tire or an element attached with the tire that rotates with the tire.

25. The sensor assembly as recited in claim 24, wherein the retaining member is attached to a wheel that the tire is mounted on.

26. The sensor assembly as recited in claim 24, wherein the retaining member is attached to a valve stem or valve cap of a wheel that the tire is mounted on.

27. The sensor assembly as recited in claim 24, wherein the retaining member is attached to the inside surface of the vehicle tire by an adhesive layer after the vehicle tire has been vulcanized.

28. A sensor assembly and sensing system for use with an object that rotates in use comprising:

a housing comprising an outer structure that defines an open internal cavity therein,

an electrical sensor device disposed within the internal cavity and having a fixed placement therein by one or more surface features of the housing configured to contact the electrical sensor device, wherein the electrical sensor device is configured to monitor and transmit and/or receive information regarding surrounding conditions, orientation and/or location, wherein the electrical sensor device comprises:

a portable power source;

a sensor; and

an antenna for transmitting and/or receiving information relating to the operating parameter being monitored by the sensor;

a retaining member having an outside surface configured for attaching with a surface of the object or an element connected with the object to rotate with the object in use, wherein the retaining member is configured to accommodate placement a portion of the housing therein to provide an attachment between the housing and the retaining member; and

a receiver external from the object that is configured to receive information from the electrical sensor device wirelessly.

29. The sensor assembly and sensing system as recited in claim 28, comprising an external transmitter for sending information wirelessly to the electronic sensor device.

30. The sensor assembly and sensing system as recited in claim 28, wherein one of the top cover or the bottom section are made separately from the wall section and are attached to the wall section after the electrical sensor device has been installed within the housing internal cavity.

31. The sensor assembly and sensing system as recited in claim 28, wherein the internal cavity comprises an open space above or below the electrical sensor device disposed within the internal cavity.

32. The sensor assembly and sensing system as recited in claim 28, wherein the retaining member is formed from an elastomeric material that mitigates transmission of shock

forces received from the object when attached to the object before reaching the housing attached with the retaining member.

33. The sensor assembly and sensing system as recited in claim **28**, wherein the electrical sensor device comprises an accelerometer sensor and is configured to send data from the accelerometer sensor wirelessly to the external receiver.

34. The sensor assembly and sensing system as recited in claim **33**, wherein the object is a vehicle tire and the system is configured to determine one or more parameters consisting of a tire diameter, slip, strain, road conditions or soil conditions, a tire tread depth, a tire radial load, and vehicle camber and/or toe alignment from the accelerometer sensor data.

35. The sensor assembly and sensing system as recited in claim **33**, wherein the object is a vehicle tire and the system is configured to determine one or more of a tire diameter, a tire tread depth, slip, strain, road or soil conditions, and a tire radial load from data including a specific rotational speed of the tire at a given vehicle velocity.

36. The sensor assembly and sensing system as recited in claim **28**, wherein the electrical sensor device or receiver comprises a global positioning device.

37. The sensor assembly and sensing system as recited in claim **36**, wherein the object is a vehicle tire and the system is configured to determine a location of the vehicle tire from information provided by the global positioning device.

38. The sensor assembly and sensing system as recited in claim **28**, wherein the electrical sensor device comprises a gyroscope.

39. The sensing system as recited in claim **38**, wherein the object is a vehicle tire and information from the gyroscope is used to determine one or more of tire alignment, tire orientation, tire radial load, and tire tread depth.

40. A sensor assembly and sensing system for use with an object that rotates in use comprising:

a housing comprising an outer structure that defines an open internal cavity therein,

an electrical sensor device disposed within the internal cavity and having a fixed placement therein through the use of one or more surface features of the internal cavity in contact with the electrical sensor device, wherein the electrical sensor device is configured to monitor and transmit and/or receive information regarding surrounding conditions, orientation and/or location, wherein the electrical sensor device comprises:

a portable power source;

a sensor; and

an antenna for transmitting and/or receiving information relating to the operating parameter being monitored by the sensor;

a retaining member having an outside surface configured for attaching with a surface of the object or an element connected with the object to rotate with the object in use, wherein the retaining member is configured to accommodate placement a portion of the housing therein to provide an attachment between the housing and the retaining member; and

a receiver external from the object that is configured to receive information from the electrical sensor device wirelessly;

wherein the housing includes a wall structure having a top cover at a first axial end of the wall structure and a base section at an opposed second axial of the wall structure, wherein the retaining member has a wall structure and an open chamber defined therein that is configured to complement the housing wall structure to accept placement of the housing within the retaining member and attachment therewith.

41. A method for using a sensor assembly and sensing system with an object that rotates in use comprising the steps of:

installing an electrical sensor device within an internal cavity of a housing, wherein the housing includes an outer structure that defines the internal cavity, and wherein the electrical sensor device comprises a sensor, a portable power source, an antenna, a printed circuit board, and related electrical circuitry, wherein the housing comprises an opening extending from an outer surface of the housing to the internal cavity;

attaching the housing after the step of installing to a retaining member, wherein the retaining member is configured to accommodate attachment with the housing by mechanical or bonding technique, wherein the retaining member is connected with the object before or after formation of the object; and

monitoring an operating parameter of the object through the use of the electrical sensing device, wherein information related to the operating parameter is wirelessly transmitted from the electrical sensing device to a receiver that is external from the sensor assembly.

42. The method as recited in claim **41**, wherein during the step of installing, the housing includes a wall structure having an opening through which the electrical sensor device is installed and, after the step of installing, the opening is closed by attaching a top cover or bottom section to the opening.

43. The method as recited in claim **41**, wherein during the step of installing, the electrical sensor device is attached in place within the internal cavity by contact between the electrical sensor device and one or more surface features in the internal cavity.

44. The method as recited in claim **41**, wherein the object is a made from vulcanized rubber, and before the step of attaching, the retaining member is attached with the object or an element that rotates with the object before or after the object has been formed.

45. The method as recited in claim **44**, wherein the retaining member is attached to a surface of the object by use of an adhesive layer or during the formation of the object.

46. The method as recited in claim **45**, wherein the retaining member is attached to the object after the step of attaching the housing to the retaining member.

47. The method as recited in claim **45**, wherein the retaining member is attached to the object by applying hand pressure onto the retaining member once placed into contact with the surface of the object to cause the adhesive layer to form an attachment therebetween.

48. The method as recited in claim **44**, wherein the object is a vehicle tire, and wherein the retaining member is attached to a surface that is inside of the vehicle tire.

49. The method as recited in claim **44**, wherein the retaining member is mechanically attached to an element that is connected to and that rotates with the object.

50. The method as recited in claim **41**, wherein during the step of attaching, the housing is positioned relative to the retaining member according to a display feature that is positioned on the housing.

51. The method as recited in claim **41**, wherein during the step of monitoring, the sensor monitors operating parameters comprising one or more of operating conditions, orientation, and location and transmits by use of the antenna information related to the monitored operating parameter to

the receiver, and wherein the electrical device is configured to receive information transmitted from an external device to change one or more feature of the electrical sensor device.

52. The method as recited in claim **41**, wherein the sensor assembly electrical sensor device comprises an accelerometer sensor.

53. The method as recited in claim **52**, wherein the object is a vehicle tire, and wherein during the step of monitoring, one or more of a tire outside diameter, a tire tread depth, slip, strain, road or soil conditions, a tire radial load, and a vehicle camber and/or toe alignment parameter is determined from information sent wirelessly from the sensor assembly.

54. The method as recited in claim **52**, wherein the object is a vehicle tire, and wherein during the step of monitoring, one or more of a tire outside diameter, a tire tread depth, slip, strain, road or soil conditions, and a tire radial load is determined from information relating to a specific rotational speed of the tire at a given vehicle velocity.

55. The method as recited in claim **41**, wherein the object is a vehicle tire and the electrical sensor device or receiver comprises a global positioning device, and wherein the step of monitoring a location of the tire is determined from information provided by the global positioning device.

56. The method as recited in claim **41**, wherein the electrical sensor device comprises a gyroscope.

57. The sensing system as recited in claim **56** wherein the object is a vehicle tire and information from the gyroscope is used to determine one or more of tire alignment, tire orientation, tire radial load, and tire tread depth.

* * * * *

Exhibit F

IN THE UNITED STATES PATENT AND TRADEMARK OFFICE

Appl. No.:	15/139,272	Confirmation No.:	1031
Applicants:	Keith George Ferry et al.	Group Art Unit:	1762
Filed:	April 26, 2016	Examiner:	Fred M. Teskin
Title:	DISPLAY ASSEMBLIES AND METHODS FOR APPLYING THE SAME TO VULCANIZED RUBBER ARTICLES	Docket No.	67838.00200
		Customer No.	125632

Mail Stop Amendment
Commissioner for Patents
P. O. Box 1450
Alexandria, VA 22313-1450

RESPONSE TO NON-FINAL OFFICE ACTION

Dear Commissioner:

In response to the Non-Final Office Action issued April 5, 2018, Applicants respectfully request that the above-identified application be amended as follows.

Amendments to the Specification begin on page 2 of this paper.

Amendments to the Claims are reflected in the listing of claims, which beings on page 3 of this paper.

Remarks/Arguments begin on page 8 of this paper.

Amendments to the Specification:

Please amend paragraph 1 on page 5 of the specification (paragraph [0015] in the Published Patent Application) as follows:

FIG. 5 is a cross sectional side view of a fourth example display assembly as disclosed herein comprising a double display layer '52' embodiment five-layer assembly '55' ~~'50'~~ having layer '57 as the outermost aesthetic display layer which is vulcanized for a permanent bond to a second display layer '59' which is bonded with a shock absorbing layer '56' using a permanent adhesive layer '54' and the barrier layer '56' is layered with another adhesive layer '58' for permanently bonding to the vulcanized rubber article;

Amendments to the Claims:

This listing of claims will replace all prior versions, and listings, of claims in the application:

Listing of Claims:

1. (Currently Amended) A display assembly for attachment with a vulcanized rubber article comprising:

one or more display layers of elastomeric material configured to provide a display indicia;

an intermediate layer formed from an elastomeric material that is different from that of the one or more display layers, wherein the intermediate layer is in direct contact with at least of the one or more display layers, and wherein the one or more display layers and the intermediate layer are vulcanized together before attachment with the vulcanized rubber article; and

an adhesive layer in direct contact with an underside surface of the intermediate layer opposite the one or more display layers, wherein ~~the intermediate layer is interposed between the adhesive layer and the one or more display layers,~~ the adhesive layer is ~~being~~ formed from a material capable forming a chemical bond ~~of chemically bonding~~ with a surface of ~~a~~ the vulcanized rubber article at ambient temperature conditions.

2. (Currently Amended) The display assembly as recited in claim 1 comprising a first display layer and a second display layer disposed beneath the first display layer, wherein the second display layer is in directly contact with a topside surface of the intermediate layer opposite the underside surface.

3. (Currently Amended) The display assembly as recited in claim 2 wherein the first display layer is colored or shaped differently from the second display layer.

4. (Currently Amended) The display assembly as recited in claim 1 wherein the adhesive layer is formed from a material capable of providing the chemical bond attachment with the surface of the vulcanized rubber article by hand pressure ~~further comprising an intermediate adhesive layer interposed between the one or more display layers and the intermediate layer.~~

5. (Currently Amended) The display assembly as recited in claim 4 ~~2~~ wherein the hand pressure in from about 3 to 10 Psi ~~further comprising an intermediate adhesive layer interposed between the second display layer and the intermediate layer~~.

6. (Original) The display assembly as recited in claim 1 further comprising a protective layer disposed over the one or more display layers and forming an outermost surface of the display assembly, the protective layer formed from an optically transparent material.

7. (Original) The display assembly as recited in claim 1 further comprising a cavity disposed therein.

8. (Original) The display assembly as recited in claim 7 further comprising an element disposed within the cavity.

9. (Currently Amended) The display assembly as recited in claim 7 ~~5~~ wherein the cavity is disposed beneath the one or more display layers.

10. (Currently Amended) The display assembly as recited in claim 2 wherein the ~~he~~ first display layer ~~include~~ includes one or more openings therethrough, and wherein the second display layer is visible through the one or more openings .

11. (Currently Amended) A method for attaching a display assembly to a surface of a vulcanized rubber article comprising the steps of;

preparing a surface of a vulcanized rubber article by cleaning the surface;

applying an adhesive material to form an adhesive layer;

placing a display assembly into contact with the surface with the adhesive layer interposed therebetween to form a bond between the display assembly and surface, the display assembly comprising:

one or more display layers of elastomeric material constructed to provide a display indicia; and

an intermediate layer formed from an elastomeric material that is different from that of the one or more display layers, wherein the intermediate layer is vulcanized to at least one of the one or more display layers before attachment to the vulcanized rubber article to form the display assembly;

wherein ~~the intermediate layer is interposed between the~~ during the step of placing, an underside surface of the intermediate layer of the display assembly is placed into direct contact with the adhesive layer, and wherein ~~and the one or more display layers,~~ the adhesive layer ~~being~~ is formed from a material that ~~capable of~~ chemically bonds ~~bonding~~ the display assembly to the surface of the vulcanized rubber article at ambient temperature conditions and by hand pressure.

12. (Currently Amended) The method as recited in claim 11 further comprising treating the surface of the vulcanized rubber article to roughen the surface before the step of placing.

13. (Currently Amended) The method as recited in claim 12 further comprising applying a template to the surface of the vulcanized rubber article before the step of applying the adhesive material, wherein the template has a cut out section and wherein, during the step of applying, the adhesive material is applied to the surface exposed through the cut out section.

14. (Currently Amended) The method as recited in claim 11 wherein the hand pressure is from about 3 to 10 Psi ~~further comprising applying pressure to the display assembly after the step of placing~~.

15. (Currently Amended) The method as recited in claim 11 wherein the display assembly further comprises an optically transparent protective layer disposed over an outermost surface of the one or more display layers ~~further comprising the step of heating the adhesive material after the step of applying~~.

16. (Currently Amended) The method as recited in claim 11 wherein the display assembly comprises a transfer carrier disposed on an outer surface of the one or more display layers and, wherein after the step of placing, the transfer carrier is removed from the display assembly.

17. (Original) The method as recited in claim 11 wherein after the step of placing, a further display layer is placed onto the one or more display assembly display layers and an adhesive layer is interposed between the further display layer and the display assembly.

18. (Original) The method as recited in claim 11 wherein the vulcanized rubber article is tire, and wherein the surface is a sidewall surface of the tire.

19. (Currently Amended) A vulcanized rubber tire comprising:

a target surface disposed along a portion of the rubber tire;

a display assembly disposed onto the target surface and comprising:

~~a~~ one or more display ~~layer~~ layers of elastomeric material;

an intermediate layer formed from an elastomeric material different from that of the one or more display layers and vulcanized to at least one of the one or more display layers prior to attachment to the target surface ; and

an adhesive layer forming a chemical bond between an underside surface of the intermediate later and the ~~interposed between the~~ target surface, wherein the chemical bond is formed at ambient temperature conditions ~~and the intermediate layer bonding the display assembly to the target surface~~.

20. (Currently Amended) The rubber tire as recited in claim 19 wherein the one or more display ~~layer~~ layers comprise ~~comprises~~ two display layers, and wherein the two display layers are configured within the assembly to provide a desired display indicia.

REMARKS

Applicants have amended claims 1 to 5, 9 to 16, 19, and 20, and no claims have been cancelled. Accordingly, upon entry of this response, Applicants submit that claims 1 to 20 remain pending in this patent application. Applicants now address each and every point raised by the Examiner in the above-identified Office action as follows:

I. Objection to the Specification

The disclosure has been objected to for informalities noted by the Examiner. Applicants have amended the noted paragraph of the disclosure to make the revision suggested by the Examiner. In view thereof, Applicants respectfully request that the objection of the specification be reconsidered and withdrawn.

II. Objection of Claims

Claims 10 and 11 have been objected to for informalities noted by the Examiner. Applicants have amended claims 10 and 11 to address the informalities in the manner suggested by the Examiner. In view thereof, Applicants respectfully request that the objection of claims 10 and 11 be reconsidered and withdrawn.

III. Claim Rejection Under Section 112

Claims 9, 19 and 20 have been rejected under 35 U.S.C. § 112(b) or 35 U.S.C. §112 (pre-AIA), second paragraph, as allegedly being indefinite for failing to particularly point out and distinctly claim the subject matter which the inventor or a joint inventor, or for pre-AIA the applicant regards as the invention. Applicants have amended each of these claims to address the issues noted by the Examiner for each of these respective claims, and respectfully request that the rejection of such claims under 35 U.S.C. § 112 be reconsidered and withdrawn.

IV. Claim Rejection Under Section 102 Based on DeTrano

Claims 1, 11, 18 and 19 have been rejected under 35 U.S.C. §102(a) (1) as allegedly being anticipated by US 5300164 DeTrano et al (hereinafter, "DeTrano"). Applicants have amended independent claims 1, 11 and 19 to better clarify the features of the display assembly or method of making the same as respectively recited therein. Specifically, Applicants have amended independent claim 1 to clarify that at least one of the one or more display layers and the intermediate layer are vulcanized together before attachment to the vulcanized rubber article, that the adhesive layer is in direct contact with an underside surface of the intermediate layer, and that the adhesive layer is formed from a material capable of forming a chemical bond with a surface of the vulcanized rubber article at ambient temperature conditions. The method as recited in independent claim 11 and the vulcanized tire as recited in independent claim 19 have each been amended to include the above-noted features as those presently recited in amended claim 1.

DeTrano discloses a decorative applique for applying to a tire, wherein the applique includes (referring to FIGS. 2 and 3) an outermost visible layer (21), a barrier layer (22) affixed to the visible layer, a compatibilizing layer (23) affixed to the barrier layer, and an adhesive (24) used to affix the applique to the tire. Wherein the purpose and intent of the applique including the compatibilizing layer positioned adjacent the tire is to have properties that closely match those of the tire to maximize joining together of the applique with the tire via the adhesive layer. Applicants have amended independent claims 1, 11 and 18 to clarify that no such compatibilizing layer exists in its display assembly, rather the barrier layer of the display assembly is chemically bonded to the vulcanized rubber article. Applicants submit that such construction is not disclosed in DeTrano. Further, Applicants have amended independent claims 1, 11 and 18 to specifically recite the feature that the one or more display layers are vulcanized to the intermediate layer before attachment. DeTrano discloses that its three layers making up its applique may be procured by heat and/or chemical curing or high energy radiation, but fails to expressly disclose vulcanization.

For the reasons presented above, Applicants submit that DeTrano fails to disclose the above noted- features described above and not recited in each of Applicants' independent claims. For a reference to properly anticipate the claims of a pending patent application such reference

must disclose each and every feature expressly disclosed in such claims. In view of the above, Applicants submit that it's display assembly and method of applying the same as recited in the amended independent claims is properly novel over DeTrano. For these reasons, Applicants respectfully request that the rejection of amended independent claims 1, 11 and 18, and the above identified claims depending respectively therefrom, under 35 U.S.C. §102 based on DeTrano be reconsidered and withdrawn.

V. Claim Rejection Under Section 102 Based on Ogawa

Claims 1 and 19 have been rejected under 35 U.S.C. §102(a) (1) as allegedly being anticipated by US 4461795 to Ogawa. Applicants have amended independent claims 1 and 18 in the manner disclosed above in Section IV to recite the noted clarifying features.

Ogawa discloses a mark for use with rubber articles that may include an outermost chromatic rubber layer, a barrier layer attached with the chromatic rubber layer, and an adhesive layer attached with the barrier layer. As best understood, Ogawa appears to disclose that the chromatic rubber layer, barrier layer, and adhesive layer combined by laminating. However, Ogawa does not appear to disclose volcanizing the chromatic rubber later and barrier layer together separately from combining or forming the adhesive layer. Further, Ogawa discloses the need for high temperature heat pressing conditions (e.g., at 150 to 200 °C), and fails to disclose the use of an adhesive layer formed from a material that forms a chemical bond between the pre-vulcanized components of the display assembly, and the vulcanized rubber article at ambient temperature conditions.

For the reasons presented above, Applicants submit that Ogawa fails to disclose the above noted- features described above and not recited in each of Applicants' independent claims. For a reference to properly anticipate the claims of a pending patent application such reference must disclose each and every feature expressly disclosed in such claims. In view of the above, Applicants submit that it's display assembly and method of applying the same as recited in the amended independent claim 1 and 11 are properly novel over Ogawa. For these reasons, Applicants respectfully request that the rejection of amended independent claims 1 and claim 19

(depending from independent claim 11) under 35 U.S.C. §102 based on Ogawa be reconsidered and withdrawn.

VI. Claim Rejection Under Section 103 Based on DeTrano

Claims 2 to 5, 10, 12 to 15, 17 and 20 have been rejected under 35 U.S.C. §103 as allegedly being unpatentable over DeTrano. Applicants have amended independent claims 1, 11 and 19 in the manner discussed above in Section IV. Applicants submit that, for the same reasons presented above in Section IV that DeTrano fails to remotely suggest those clarifying features now recited in each of the amended independent claims. Accordingly, Applicants submit that one having ordinary skill in the art aware of DeTrano would not have suggestion or motivation to make the display assembly comprising the features now recited in the amended independent claims, which features are missing in DeTrano. For example, the failure to include a compatibilizing layer in DeTrano would be contrary to the intent and purpose of mitigating the differences between the applique and the tire for purpose of ensuring a good strong bond between the two.

For the reasons presented above, Applicants submit that its display assembly and method of applying the same as recited in amended independent claims 1, 11 and 19 are properly patentable over DeTrano. In view thereof, Applicants respectfully request that the rejection of amended independent claims 1, 11 and claim 19 (and the above-identified claims depending respectively therefrom) under 35 U.S.C. §103 based on DeTrano be reconsidered and withdrawn.

VII. Claim Rejection Under Section 103 Based on DeTrano and Miyazaki

Claims 6 and 16 have been rejected under 35 U.S.C. §103 as allegedly being unpatentable over DeTrano as applied to claims 1 and 11 above, and further in view of US 6235376 B1 to Miyazaki et al (hereinafter, "Miyazaki"). Applicants have amended independent claims 1 and 11 as discussed above in Section IV, and submit that the subject matter of such claims is properly patentable over DeTrano for the same reasons presented above in Section VI.

As noted by the Examiner, DeTrano fails to disclose or suggest the use of an optically transparent protective layer over the display assembly. Here, Miyazaki is relied on for its disclosure of a protective layer that may be transparent over a display label as used on a tire. However, here like DeTrano, Miyazaki also fails to disclose or suggest a display label comprising the features now recited in Applicant's amended independent claims 1 and 11, which features have been discussed above in at least Section IV of this response. Thus, Applicants submit that one having ordinary skill in the art taking DeTrano and Miyazaki in combination would not have motivation or suggestion to make a display assembly comprising the features as recited in Applicants' independent claims 1 and 11, which features are missing in each reference.

For this reason, Applicants submit that its display assembly and method of applying the same as recited in amended independent claims 1 and 11 are properly patentable over the combination of DeTrano and Miyazaki. In view thereof, Applicants respectfully request that the rejection of claims 6 and 16 (depending from respective amended independent claims 1 and 11) under 35 U.S.C. §103 based on the combination of DeTrano and Miyazaki be reconsidered and withdrawn.

VIII. Claim Rejection Under Section 103 Based on DeTrano and Parsons

Claims 7 to 9 have been rejected under 35 U.S.C. §103 as allegedly being unpatentable over DeTrano as applied claims 1 and 11 above, and further in view of US 2005/0059308 A1 to Parsons. Applicants have amended independent claim 1 as discussed above in Section IV, and submit that the subject matter of such claim is properly patentable over DeTrano for the same reasons presented above in Section VI.

As noted by the Examiner, DeTrano fails to disclose or suggest a display assembly construction comprising a cavity. Here, Parsons is relied on for its disclosure of integrating an RFID element in a label attached to a tire. However, here like DeTrano, Parsons also fails to disclose or suggest a display label comprising the features now recited in Applicant's amended independent claim 1, which features have been discussed above in at least Section IV of this response. Thus, Applicants submit that one having ordinary skill in the art taking DeTrano and Parsons in combination would not have motivation or suggestion to make a display assembly

comprising the features as recited in Applicants' independent claim 1, which features are missing in each reference.

For this reason, Applicants submit that its display assembly as recited in amended independent claim 1 is properly patentable over the combination of DeTrano and Parsons. In view thereof, Applicants respectfully request that the rejection of claims 7 to 9 (each depending from independent claim 1) under 35 U.S.C. §103 based on the combination of DeTrano and Parsons be reconsidered and withdrawn.

IX. Conclusion and Request for Telephonic Examiner Interview

For all of the reasons presented above, Applicants respectfully request that objections to the specification and claims, and rejections of the claims §§ 112, 102 and 103 be reconsidered and withdrawn, and that the claims pending in this patent application be passed to allowance.

Should, after considering Applicants' amendments and remarks presented herein, the Examiner feel that the application claims are not in proper condition for allowance, Applicants respectfully request that the Examiner please contact it's below designated patent attorney for the purposes of most effectively advancing prosecution of this application to allowance.

No fee is believed to be due with this response. However, Applicants authorize the Commissioner to charge any underpayment of fees or to credit any overpayment of fees, including extension of time fees, to Deposit Account No. 19-2814.

Respectfully submitted,

Dated: July 5, 2018

/Grant T. Langton/

Grant T. Langton
Registration No. 39,739
Snell & Wilmer L.L.P.
One Arizona Center
400 East Van Buren Street, Suite 1900
Phoenix, AZ 85004-2202
ipladocket@swlaw.com
(213) 929-2505 (Direct); (213) 929-2525 (Fax)
Attorney for Applicants

CUSTOMER NUMBER

125632

Exhibit G

US005300164A

United States Patent [19]

DeTrano et al.

[11] Patent Number: 5,300,164

[45] Date of Patent: Apr. 5, 1994

[54] **PNEUMATIC TIRE HAVING A DECORATIVE APPLIQUE AND A METHOD FOR APPLYING A DECORATIVE APPLIQUE TO A TIRE**

[75] Inventors: **Mario N. DeTrano**, Massillon; **James H. C. Yang**, Cleveland; **George G. A. Bohm**, Akron; **Arthur E. Oberster**, North Canton; **Russell W. Koch**, Hartville, all of Ohio

[73] Assignee: **Bridgestone Corporation**, Tokyo, Japan

[21] Appl. No.: **832,455**

[22] Filed: **Feb. 7, 1992**

[51] **Int. Cl.**[5] **B60C 13/04**; B29D 30/72

[52] **U.S. Cl.** **156/116**; 152/524; 152/DIG. 12

[58] **Field of Search** ..... 156/116; 152/524, 523, 152/525, DIG. 12

[56] **References Cited**

U.S. PATENT DOCUMENTS

2,334,388	11/1943	Daniel	156/116 X
2,746,515	5/1956	Usack	156/116
2,979,099	4/1961	Rowe	156/116
3,449,201	6/1969	Palmquist et al.	152/524 X
4,461,795	7/1984	Ogawa	152/524 X
4,495,326	1/1985	Donatelli et al.	524/533
4,500,466	2/1985	Hayes et al.	260/429.9
4,767,481	8/1988	Bryant et al.	156/116
4,853,069	8/1989	Williams et al.	156/401
4,929,684	5/1990	Roland et al.	525/161
4,987,192	1/1991	Oberster et al.	525/274
5,049,220	9/1991	Gartland et al.	156/116
5,058,647	10/1991	Gartland et al.	152/524

FOREIGN PATENT DOCUMENTS

2006692	5/1979	United Kingdom	152/524

OTHER PUBLICATIONS

P. 237, of a encyclopedic-like technical article, which discusses ethylene glycol plasticizers.

Specification sheet entitled "Adiprene L-367" from DuPont.

Primary Examiner—Geoffrey L. Knable

Attorney, Agent, or Firm—Daniel N. Hall

[57] **ABSTRACT**

According to the present invention, a pneumatic tire includes a cured tread area, an outer sidewall area connected to the tread area, and an outer bead connected to the sidewall area at an end thereof and defining an opening for receiving a wheel. The tire also includes a precured, elastomeric, decorative applique and an applique-contacting adhesive layer positioned between the sidewall and the applique. A method according to the present invention, of providing a cured pneumatic tire with a decorative outer sidewall, includes the step of bonding to the outer sidewall of the cured pneumatic tire a cured, elastomeric, decorative applique with an adhesive layer.

9 Claims, 1 Drawing Sheet

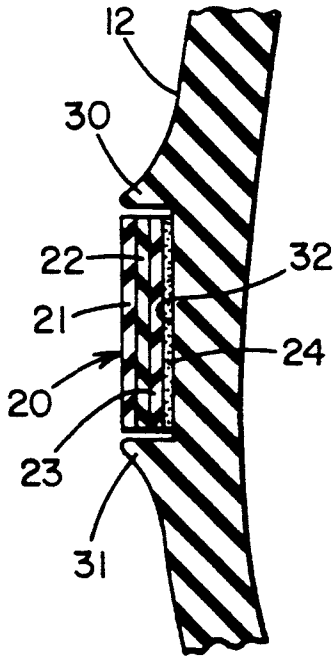

FIG. 1

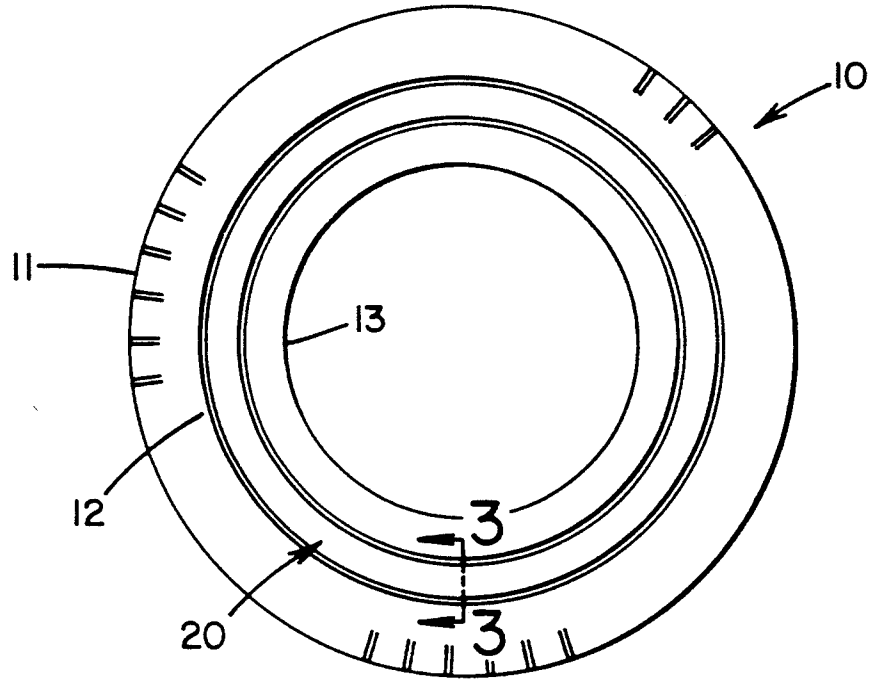

FIG. 2

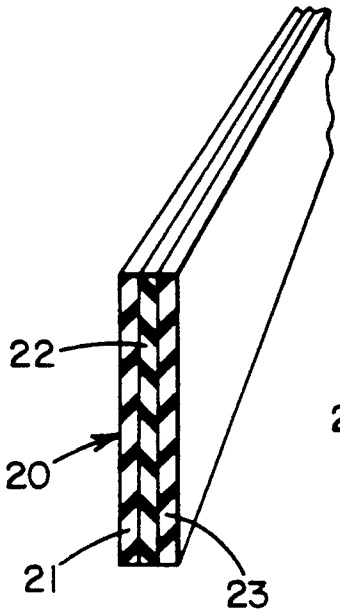

FIG. 3

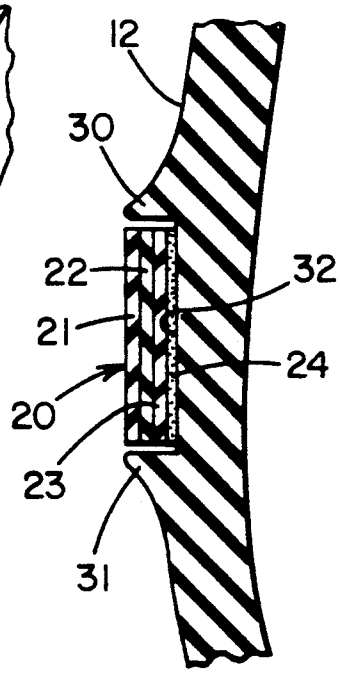

FIG. 4

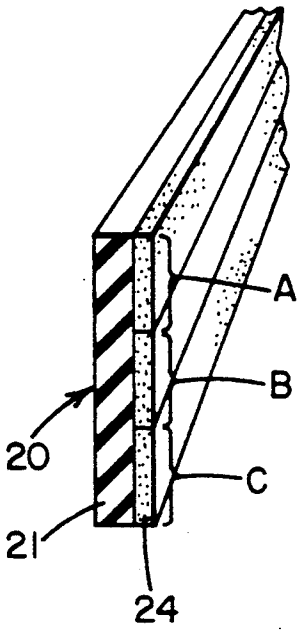

PNEUMATIC TIRE HAVING A DECORATIVE APPLIQUE AND A METHOD FOR APPLYING A DECORATIVE APPLIQUE TO A TIRE

TECHNICAL FIELD

The invention herein is related to the art of pneumatic vehicle tires. More particularly, the invention is related to such tires having a decorative applique on the outer sidewall thereof. Specifically, the invention relates to a cured pneumatic tire having a pre-cured decorative applique adhered to it.

BACKGROUND ART

Heretofore, tires having decorative sidewalls have been well known and well received in the marketplace. The decorative portion of sidewalls have typically been formed by the co-extrusion of black rubber along with colored or white rubber, the resulting extrudate being applied to the sidewall of the tire and co-vulcanized therewith during the curing process. This co-extrusion process involves expensive materials, processing steps, and equipment. Further, the previously known process may result in blemishes, imperfections, voids and the like in the sidewall area, greatly increasing waste during the manufacturing process. The need to handle colored or white rubber stocks during tire manufacture has also proved inconvenient in many instances.

It has also become popular to design tires having decorations such as words, designs, letters, logos and the like on the sidewall, the same being introduced to the tire through molding or extruding processes which are also time consuming and expensive. As with the tires having decorative bands, these tires have a characteristic waste factor associated therewith, significantly adding to the manufacturing costs. The expense of sophisticated molds and dies to achieve such "custom" tires has made such tires unavailable to the average member of the consuming public.

An example of an uncured applique being co-cured with a green tire is found in U.S. Pat. No. 5,058,647. An example of an uncured applique applied to a cured tire is disclosed in U.S. Pat. No. 5,049,220. Both of these methods for providing a decorative sidewall onto a tire add to the processing difficulty and expense of the tire, as discussed hereinabove.

Therefore a need exists for an effective applique and method for applying the applique to a cured tire, which does not involve the expensive and time consuming curing processes associated at present with the manufacture of such pneumatic tires.

DISCLOSURE OF THE INVENTION

It is therefore an object of the present invention to provide a tire having a decorative applique thereon.

It is another object of the present invention to provide a cured tire with a cured decorative applique thereon.

It is a further object of the present invention to provide a method for making a tire having a decorative applique thereon.

It is still another object of the present invention to provide a method for making a cured tire with a cured applique.

At least one or more of the foregoing objects, together with the advantages thereof over the existing art, which shall become apparent from the specification

which follows, are accomplished by the invention as hereinafter described and claimed.

In general, the present invention provides an improvement in a cured pneumatic tire having a tread area and an outer bead and an outer sidewall area extending therebetween, the bead defining an opening for receiving a wheel, wherein the improvement comprises a cured, elastomeric, decorative applique and an adhesive layer on the outer sidewall of the tire. The adhesive layer is interposed between and bonded to both the applique and the outer sidewall of the tire.

The present invention also provides a tire which comprises a cured tread area and an outer bead and an outer sidewall area extending therebetween, the bead defining an opening for receiving a wheel, and, in addition, a cured, elastomeric, decorative applique on the outer sidewall of the tire, and an adhesive layer positioned between the outer sidewall and the applique.

A method according to the present invention of providing a cured pneumatic tire with a decorative sidewall comprises the step of bonding to the outer sidewall of the cured pneumatic tire a cured, elastomeric, decorative applique, with an adhesive.

BRIEF DESCRIPTION OF THE DRAWINGS

FIG. 1 is an elevational view of a tire having a decorative applique thereon according to the aspects of the present invention;

FIG. 2 is a fragmentary, oblique pictorial, cross-sectional view of the decorative applique as depicted in FIG. 1;

FIG. 3 is a fragmentary sectional view of the tire shown in FIG. 1, taken substantially along line 3—3 thereof.

FIG. 4 is a fragmentary, oblique pictorial, cross-sectional view of an alternative embodiment of the decorative applique as depicted in FIG. 1.

PREFERRED EMBODIMENTS FOR CARRYING OUT THE INVENTION

In contrast with previous pneumatic tires having decorative outer sidewalls thereon, such as those wherein an extrudate is molded and/or vulcanized thereto, the instant invention provides a cured applique maintained upon a cured tire. More particularly, the present invention provides for a cured applique adhesively bonded to a cured tire. As will be appreciated by those skilled in the art, by practice of the present invention, it is not necessary to fabricate different tires having different appliques thereon. In other words, the tire manufacturer is free to make essentially one group of master tires and then apply a variety of decorative appliques to them. Furthermore, because the applique according to the invention is pre-cured before being applied to a cured tire, the applique has a greater storage and cold flow stability, and is easier to store and handle than uncured appliques.

Hence, according to the present invention, the tire itself may be fabricated without a separate decorative outer sidewall being built directly into the tire. Problems such as blemishes, imperfections, voids, imbalance and modulus change which are sometimes associated with the manufacturing process, are effectively avoided in the sidewall. It will be further appreciated from the following discussion, that a tire having an applique according to the present invention, will provide for more efficient tire production and weight saving in the

tire itself, and may, therefore, improve tire performance, due to more uniformity and integrity therein.

As shown in FIG. 1 on the attached drawings, a pneumatic tire of substantially conventional design is generally indicated by the numeral **10**. Tire **10** is provided with a tread area **11**, an outer sidewall area **12** and an outer bead **13**. By "outer" it is understood to mean the side of tire **10** which is visible when mounted upon a vehicle. It is understood that all tires have two beads and two sidewalls. Bead **13** defines an opening for receiving a wheel (not shown), and sidewall **12** extends between and joins tread area **11** and bead **13**. While the composition of tire **10** is not an aspect of the present invention, it is understood that the composition includes conventional components such as synthetic and/or natural rubbers, fillers, carbon black, anti-aging components and the like.

Tire **10** according to the present invention, is provided with a decorative applique generally indicated by the numeral **20**, in a manner to be more fully described hereinbelow. As best shown in FIG. 2, applique **20** includes an outer or visible layer **21**. By "visible" it is intended to convey the understanding that layer **21** is that which can be seen when tire **10** having applique **20** maintained thereon is completed. This does not require that any other layer of applique **20** cannot also be visible in the completed tire **10**, or that only one decorative visible layer is an absolute restriction of the invention. For ease in describing the present invention however, reference will be made to an applique having only one visible layer **21**.

Visible layer **21** may be formed from any material which will accomplish the objects of the invention. In a particular, preferred embodiment, the invention provides a tire with a continuous elastomeric ring of the type often employed as a "white sidewall" for a tire. As will be further discussed hereinbelow, the applique is not limited to a white material, and may be any color or combination of colors desired. Furthermore, visible layer **21** may be a ring as depicted in the drawings, or it may be any other shape such as raised letters or the like. Furthermore, visible layer **21** may be provided with a plurality of colors, designs, markings, textures, lettering or the like.

An example of a preferred composition for a continuous ring applique **20**, is a conventional white sidewall stock. Such stocks are known to contain components such as rubber, for example, chlorobutyl rubber, natural rubber, and ethylene-propylene diene terpolymers (EPDM) and mixtures thereof; and a colorant such as titanium dioxide for the color white. Other colorants such as those disclosed in U.S. Pat. No. 4,987,192, which is incorporated by reference herein, may be employed without restriction to form a visible layer **21** having any color or combinations of colors desired. Furthermore, other ingredients such as zinc methacrylates for improving, for example, static tensile modulus, may be employed in the composition of visible layer **21**. Zinc methacrylate compounds are exemplified in U.S. Pat. Nos. 4,500,466 and 4,495,326. The use of zinc dimethacrylate-containing rubber stocks in sidewalls is disclosed in U.S. Pat. No. 4,929,684. Other examples of components added to the visible layer **21** composition would include reinforcing agents such as silica or the like.

By way of example only, a conventional white wall stock formulation is presented in TABLE I hereinbelow. This stock may be formed and cured in any conventional manner.

TABLE I

EXEMPLARY WHITE WALL STOCK FORMULATION

Ingredient	Amount[a]
Chlorobutyl Rubber	50.0
Natural Rubber	30.0
EPDM	20.0
Titanium Dioxide	35.0
Magnesium Silicate	23.0
Clay	22.0
Ultramarine Blue	0.6
Stearic Acid	1.0
Wax	2.5
Oil	3.0
Tackifier	2.0
Zinc Oxide	12.0
Sulfur	0.5
Accelerator	2.25

[a]parts by weight

Visible layer **21** may be applied directly to the tire **10** and be within the scope of the present invention. However, it is preferred that visible layer **21** be affixed to an optional, intermediate or barrier layer **22**. The purpose of barrier layer **22** is to prevent certain ingredients in tire **10**, such as antioxidants, from reaching and discoloring visible layer **21**. As an example, one preferred barrier layer **22** is composed of a blend of halobutyl rubber such as chlorobutyl rubber, and natural rubber.

While barrier layer **22** may be formed from any materials which will accomplish the objects of the invention, and while the barrier layer may an adhesive material as will be more fully discussed hereinbelow, one example of an elastomeric barrier layer formulation is given in TABLE II.

TABLE II

EXEMPLARY ELASTOMERIC BARRIER LAYER FORMULATION

Ingredient	Amount[b]
Cholorbutyl Rubber	92.0
Natural Rubber	4.0
SBR[c]	4.0
Carbon Black	70.0
Oil	13.0
Magnesium Oxide	0.3
Zinc Oxide	2.0
Stearic Acid	1.5
Tackifier	0.3
Sulfur	0.3
Accelerator	0.7

[b]parts by weight
[c]Styrene/butadiene rubber

In a further embodiment of the invention, an inner or compatibilizing layer **23** is affixed either directly to visible layer **21**, or it is affixed to barrier layer **22** and sidewall **12** of tire **10** as depicted in FIG. 2. By "compatibilizing" layer **23**, it is understood to mean that the layer is composed of a material which is substantially the same as or compatible with the material of tire **10** upon which applique **20** is maintained. For example, if applique **20** is maintained upon sidewall **12** of tire **10**, and sidewall **12** is formed from certain sidewall stock, then compatibilizing layer **23** is formed from a substantially similar sidewall stock material.

One example of a sidewall stock composition is shown in TABLE III hereinbelow.

TABLE III

EXEMPLARY SIDEWALL STOCK COMPOSITION	
Ingredient	Amount[d]
Polybutadiene Rubber	65.0
Natural Rubber	35.0
Carbon Black	50.0
Oil	10.4
Zinc Oxide	1.6
Stearic Acid	1.2
Antioxidant	4.8
Wax	2.4
Tackifier	3.2
Sulfur	2.6
Accelerator	0.8

[d]parts by weight

Applique **20** is maintained upon tire **10** with an adhesive material as will be discussed hereinbelow. Applique **20** having compatibilizing layer **23** thereon will adhere more readily to tire **10** if it is formed from a material the same or substantially the same as the material of tire **10** upon which it is maintained. For example, if applique **20** is maintained upon sidewall **12** of tire **10**, then compatibilizing layer **23** is preferably formed from a rubber stock the same as or similar to the sidewall stock of sidewall **12**. Of course, compatibilizing layer **23** may also be formed from a different material, such as another compatible rubber or any other suitable material, and still be within the scope of the invention. Furthermore, applique **20** may contain any number of layers and also be within the scope of the invention. For example, as shown in FIG. **4**, applique **20** may include only a visible layer **21** bonded with an adhesive layer **24**.

Applique **20** may be formed by any technique conventional in the art without limitation. For example, visible layer **21** may be extruded, or visible layer **21** and/or barrier layer **22** and compatibilizing layer **23** may be coextruded. The layers may also comprise strips which are calendered into a composite structure, or they may be die cut from a sheet. The actual method of manufacturing applique **20** is not critical to the invention. It is important however, that applique **20** be precured before it is applied to cured tire **10**, in a manner to now be described. Curing of the applique may be by any conventional method, such as heat and/or chemical curing or high energy irradiation.

Applique **20** is maintained upon tire **10** by an adhesive layer being bonded to it and tire **10**, as depicted by the numberal **24** in FIG. **3**. In that figure, adhesive **24** is depicted as a layer positioned or interposed between applique **20** and sidewall **12** of tire **10**. Adhesive **24** is any adhesive which will bond applique **20** securely to tire **10**. Examples of suitable adhesives include those formed from or based upon urethane, cyanoacrylate, epoxy, polyvinyl alcohol, acrylate, methacrylate, polyvinyl chloride, polyester and the like. Thermoplastic elastomers and rubber retread cements may also be employed as the adhesive such as Patch Rubber V-10 Extruder Cement, Patch Rubber Brush Type Vulcanizing and Retread Cement, and Sup-R-Tac, all available from the Assignee of record. EP 5908-29A/B, Fusor 305-1/305-2 and Chemlok 234B, all three of which are available from Lord Chemical Corporation of Erie, Penn., are also examples of adhesives useful for the practice of the present invention.

One preferred urethane adhesive for practice of the present invention, contains the components in the amounts as listed in TABLE IV hereinbelow.

TABLE IV

URETHANE ADHESIVE	
Ingredient	Parts by Weight
Adiprene L-367[e]	100
HGO Plasticizer[f]	20
CTB 810[g]	1
Acetone (solvent)	20

[e]a polyether-based urethane, available from DuPont; known to have an isocyanate content of from 6.15 to 6.55 percent
[f]a polyethylene glycol, available from Union Carbide Corporation
[g]a black pigment

The adhesive shown in TABLE IV is preferably mixed with about 32 parts by weight of Caytur 21, an amine curative available from Uniroyal Chemicals.

Depending upon the particular adhesive chosen, applique **20** may be bonded to tire **10** with or without heat and/or pressure being applied thereto. For example, Chemlok 234B bonds at elevated temperatures (130°-140° C.), and with higher pressures being applied. EP 5908-29A/B and Fusor 305-1/305-2 bond at ambient temperatures. Similarly, the time necessary for the adhesive to set or cure will vary depending upon the actual adhesive chosen.

Applique **20** may be applied by hand to tire **10**, or it may be applied with a support device (not shown). For example, if applique **20** is a ring as depicted in the drawings, a ring plate fixture may be employed to apply pressure and/or heat to the applique, as may or may not be required by the particular adhesive employed.

According to the present invention, the adhesive layer, such as adhesive layer **24**, may also function as a barrier layer in a manner similar to barrier layer **22**. The adhesives discussed hereinabove may have barrier properties to prevent staining of visible layer **12**. Cyanoacrylates, such as Loctite 447 from Loctite Corporation, are one example of an adhesive which will function as a barrier layer. Separate barrier layer **22** may or may not be employed when the adhesive has barrier properties. Any adhesives which when cured or set, will prevent materials from tire **10** from staining or otherwise degrading applique **20**, are within the scope of the invention.

According to the present invention, and as exemplified in FIG. **4** of the attached drawings, adhesive layer **24** may include more than one adhesive composition employed to bond applique **20** to tire **10** for reasons to be discussed hereinbelow. For example, a first adhesive section A, a second adhesive section B, or indeed any number of such adhesive sections may be employed. A third adhesive section C may be employed, for example.

It is preferred in one embodiment of the invention to provide at least one adhesive section, such as first adhesive section A, which includes an adhesive composition having a cure or "set" rate which is slower than the cure rate of another adhesive section, such as second adhesive section B. In this way, some adhesives which provide strong bond strength between applique **20** and tire **10** may be employed while during tire production operations the faster curing adhesives allow the tire to be further processed or otherwise handled sooner than if only the slower curing adhesive were employed. When the slower adhesive finally cures, maximum bond strength is achieved.

One example of an adhesive layer **24** would include first and third sections A and C, each of which is an adhesive having a substantially identical urethane or epoxy adhesive component. Second adhesive section B

may include a cyanoacrylate adhesive component, which is generally known to have a cure rate faster than either urethane or epoxy adhesives. Of course, any combination of adhesives may be employed. For example, first section A may be a urethane, second section B may be a cyanoacrylate and third section C may be an epoxy. Also, based upon the nature of the adhesives chosen, a urethane or epoxy adhesive may be the "fast" adhesive, while another adhesive has the quality of being the one with the "slower" cure rate. Similarly, the cyanoacrylate may be the "slow" cure rate adhesive, again depending upon the actual adhesives chosen, all such adhesives are within the scope of the invention. Also, while first, second and third sections A, B and C are depicted in FIG. **4** as being distinctive layers, it is understood that commingling and/or reaction of the adhesives of each section may occur.

While applique **20** is depicted as being adhered directly to the tire **10** in the drawings, it is to be understood that tire **10** may have a layer, such as a barrier layer (not shown) similar to barrier layer **22**, or a compatibilizing layer (not shown) similar to compatibilizing layer **23** or the like, built into and cured with tire **10**, to which applique **20** is bonded.

The method according to the present invention, includes the step of bonding an applique **20** as described hereinabove, to a tire **10** with a suitable adhesive such as was also described. Different adhesives will require different methods of application, all of which are within the scope of the invention. Furthermore, certain adhesives may require a step of priming the surfaces to be bonded, such as with Chemlok 7701 or TS 3135-57 from Lord Chemical Corporation, or any other suitable primer. Further, still, the surfaces to be bonded may be smooth or roughened to enhance bonding, in manners conventional in the bonding art. Other steps may also be taken as necessary.

It is preferred that the adhesive selected be capable of bonding applique **20** to tire **10**, such that a bond or peel strength of from about 5 to about 150 or more, and more preferably, from about 25 to about 100 pounds per linear inch, is achieved.

One exemplary method according to the present invention includes wiping applique **20** and tire **10** with a solvent to remove mold release agents, oils, dirt, etc. The surfaces to be bonded may then be buffed to RMA1 or RMA2 Standard Buffing Textures, or the like. Loose particles from buffing are then removed by another solvent wipe. The surfaces may then be primed if necessary depending upon the nature of the adhesive to be employed. The adhesive is then applied to the applique **20**, the tire **10** or both. The applique **20** is then joined or pressed against tire **10** at the desired location, with or without heat and pressure.

As discussed hereinabove, tire **10** is preferably of any design conventional in the art. Tire **10** may be provided however, with ridges **30** and **31** forming a channel **32** therebetween (FIG. **3**). Furthermore, when used to form a decorative sidewall, ridges **30** and **31** may be concentric, as depicted in the drawings. An applique **20** may then be affixed to tire **10** by being positioned within channel **32**. In addition to aiding the facile positioning of the appliques, the ridges **30** and **31** provide a degree of protection to applique **20** when tire **10** is in use upon a vehicle. Scuff damage, such as that resulting from contact with curbs, which is always a concern and a problem with decorative sidewalls and tires in general, may be substantially alleviated by placing applique **20** within channel **32**.

Applique **20** may be of a variety of thicknesses, such as from about 5 to about 500 mils. More preferably, applique **20** may be from about 50 to about 90 mils thick. The individual layers which may be employed to form a composite applique **20** as discussed hereinabove, may also vary within these thickness ranges. One factor used to determine the actual thickness of applique **20** will be the desired scuff resistance and hence, the dimensions of ridges **30** and **31** and depth of channel **32**, as will be appreciated by one skilled in the art.

As briefly discussed hereinabove, it will be appreciated that tire **10** may be manufactured without regard to the actual applique **20** to eventually be bonded thereto. Tire **10** may be employed upon a vehicle without an applique **20**, or with an applique **20** of any suitable color, design or the like. Hence, expensive and time consuming custom manufacturing procedures are not required as with the previous art.

Furthermore, it is within the scope of the invention to provide a tire having one sidewall which is smooth, and another sidewall on the opposite side of the tire having channel **32** for receiving applique **20**. The "smooth" sidewall (not shown) is conventionally known in the art as a "blackwall". With such an embodiment of the invention, only one master tire needs to be manufactured, and it can be employed as either a blackwall or as a tire having a decorative sidewall. Also, with such an embodiment, either sidewall may be employed as the "outer" sidewall of the tire, as desired by the user.

GENERAL EXPERIMENTAL

In order to exemplify the practice of the present invention, a number of decorative appliques, tires having decorative appliques and test samples were prepared according to the disclosure made hereinabove. Tests conducted included adhesion test, curb scuff test and indoor road wear simulation tests. The actual tests performed will be individually discussed hereinbelow.

PEEL ADHESIONS TESTS

In the adhesion tests, a test similar to ASTM D413 was conducted for a number of test pads to be further discussed hereinbelow. In the test, a standard six inch by six inch and 1.5 inch by six inch adhesion pads were prepared which consisted of two plies of fabric-backed sidewall stock. These pad members were then cured in a mold for 20 minutes at 328° F. The pad member was then subsequently bonded together with the appropriate adhesive as will be discussed hereinbelow. Bonded pads (1 inch×6 inches die cut from the larger pads) were then tested for bond strength at room temperature using an Instron Tensile Tester.

Example 1

Each 1.5 inch by 6 inch pad member was solvent wiped, buffed to RMA1 or RMA2 and solvent wiped again. Chemlok 234B adhesive was then applied by brush and the pads were then joined together by hand.

Each pad was placed in a six (6) inch platen cure press with only the upper platen heated to a surface temperature of 150° C., at 40 psi for 45 minutes. Peel adhesion strength was measured and found to be 36 pounds per linear inch (pli).

Example 2

Additional pad members were prepared as in Example 1, except that the adhesive employed was Fusor 305-1/305-2, which was applied by spatula. About 3 psi of pressure was applied to each pad for 24 hours at room temperature. Peel adhesion strength was 50 pli.

CURB SCUFF TESTS

The curb scuff tests were also conducted on actual tires having actual appliques applied thereto. The test tire was mounted on a vehicle at the front passenger side position, and the tire was then driven squarely against a test curb at a vehicle speed of about 5 to 15 miles per hour. Fifty complete rotations of the tire against the curb were made. The tire was judged to have passed the test if no delamination occurred after a significant number of rotations. The appearance of the test tires were compared to that of a conventional white wall tire that had gone through the same scuff test.

Example 3

A conventional cured tire having a channel thereon was solvent wiped. The applique was buffed to RMA1 or RMA2 and solvent wiped. Chemlok 234B was applied to both the tire and the applique, and allowed to air dry for one hour. The applique was then applied to the tire with a Ring-Plate Fixture at a surface temperature of 150° C. for 30 minutes at 30 psi. The sidewall thus prepared passed the scuff test described hereinabove.

Example 4

Another tire was prepared as above, except that the tire and the applique were both primed with Lord Chemical TS 3135-57 and air dried for five minutes. Fusor 305-1/305-2 was then applied to the tire channel by spatula. A Ring-Plate Fixture was employed at room temperature for 48 hours at about 5 psi, to affix the applique to the tire. The tire passed the curb scuff test.

Example 5

Another tire was prepared as in Example 4, employing the urethane adhesive formulation of TABLE IV hereinabove as the adhesive. The applique was applied with a Ring-Plate Fixture at 70° C. for 45 minutes at about 5 psi. The tire passed the curb scuff test.

Example 6

Another tire was prepared as in Example 4, with the adhesive being Lord Chemical EP 5908-29A/B, and two coats of that adhesive. The applique was applied by hand at room temperature and passed the scuff test on a somewhat more marginal basis than the tires in Examples 3–5 hereinabove.

Example 7

A commercial white sidewall tire, having a white portion built directly into the tire by conventional techniques, developed an unsightly and unacceptable appearance after less than 15 rotations of the curb scuff test.

INDOOR ROAD WEAR SIMULATION TESTS

Indoor tests were conducted under controlled conditions employing a testing apparatus which simulates vehicle and load weights, temperature conditions and vehicle speeds.

Example 8

A tire was prepared according to Example 3 hereinabove. The tire was inflated to 32 psi according to its specification. A durability test was conducted by running the tire at 50 miles per hour (mph) at about 100° F. ambient temperature for various times and at various loads as reported in TABLE V.

TABLE V

ROAD TEST DATA		
Stage	Time (hours)	Design Load[h]
1	4	100 percent
2	6	100 percent
3	24	100 percent
4	8	130 percent
5	8	145 percent
6	8	160 percent
7	8	175 percent
8	8	190 percent

[h]a percentage of the load which the tire was designed to be subjected to in normal usage

The tire was found to have passed the durability test, because no delamination of the applique occurred.

Example 9

A tire was prepared as in Example 4 hereinabove, except that the Ring-Plate Fixture was heated to a surface temperature of 110° C., and about 5 psi pressure was applied for about ten minutes. The same durability test was applied to this tire as was applied to the tire in Example 8, with this tire showing marginal results, possibly as a result of a bond line thickness that was too thin.

Example 10

A tire according to Example 8 was prepared. The tire was inflated to 24–26 psi and then cooled at −40° C. for 2.5 hours. The tire was then run at 30 mph to 50 mph for 24 minutes. The cycle was repeated 25 times without delamination of the applique.

Example 11

A tire as in Example 9 was tested as in Example 10 without applique delamination.

Based upon the foregoing disclosure, it should now be apparent that the use of the applique and method described herein will carry out the objects set forth hereinabove. It should also be apparent to those skilled in the art that the method of the present invention can be practiced to manufacture a variety of tires having appliques thereon. Similarly, the adhesive and the temperatures and pressures used to bond the applique to the tire will vary as discussed hereinabove.

It is, therefore, to be understood that any variations evident fall within the scope of the claimed invention and thus, the selection of specific number, color and shape of applique layers, the compositions thereof, the adhesive or adhesives employed, the primer, if used, and the buffing and other method steps may be made, without departing from the spirit of the invention herein disclosed and described. Moreover, the scope of the invention shall include all modifications and variations that may fall within the scope of the attached claims.

What is claimed is:

1. A pneumatic tire comprising:

a cured tread area and an outer bead, and an outer sidewall area extending therebetween, the bead defining an opening for receiving a wheel;

a pre-cured, elastomeric, decorative applique on said outer sidewall of the tire; said applique comprising a visible layer and a rubber barrier layer; and,

an adhesive layer positioned between said outer sidewall and said applique; said adhesive layer comprising a first and a second adhesive section each comprising an adhesive composition; each of said first and second adhesive sections each being in adhesive contact with the tire and said applique; wherein said first adhesive section has a cure rate which is faster than said second adhesive section; said applique being bonded to the tire with a peel strength of at least 25 pounds per linear inch.

2. A pneumatic tire, as set forth in claim **1**, wherein the tire further comprises a first and a second protective ridge maintained upon said outer sidewall proximate to said applique, and extending outwardly from said tire, forming a channel between said first and second ridges.

3. A pneumatic tire, as set forth in claim **2**, wherein said applique is positioned within said channel.

4. A pneumatic tire, as set forth in claim **1**, wherein said adhesive layer further comprising a third section which comprises the same adhesive composition as said first section.

5. A pneumatic tire, as set forth in claim **4**, wherein said first and third sections comprise an adhesive composition comprising a component selected from the group consisting of urethane and epoxy; and, said second section comprises cyanoacrylate.

6. A method of providing a cured pneumatic tire with a decorative outer sidewall, comprising the step of:

bonding to the outer sidewall of the cured pneumatic tire a pre-cured, elastomeric, decorative applique with an adhesive; said adhesive comprising a first and a second adhesive section each comprising an adhesive composition; each of said first and second adhesive sections each being in adhesive contact with the tire and said applique; wherein said first adhesive section has a cure rate which is faster than said second adhesive section; and wherein said applique is bonded to the tire with a peel strength of at least 25 pounds per linear inch; said applique comprising a visible layer and a rubber barrier layer.

7. A method, as set forth in claim **6**, further comprising the step of priming the surface of the tire to be provided with said applique with a primer.

8. A method, as set forth in claim **6**, further comprising the step of buffing said applique before said step of bonding.

9. A method, as set forth in claim **6**, wherein said adhesive further comprises a third adhesive section comprising an adhesive composition which is substantially identical to said first adhesive composition and which is also in adhesive contact with the tire.

* * * * *

Exhibit H

IN THE UNITED STATES PATENT AND TRADEMARK OFFICE

Appl. No.:	16/201,903	Confirmation No.:	1052
Inventor(s):	Keith George Ferry et al.	Group Art Unit:	2871
Filed:	November 27, 2018	Examiner:	Teskin, Fred M.
Title:	DISPLAY ASSEMBLIES AND METHODS FOR APPLYING THE SAME TO VULCANIZED RUBBER ARTICLES	Docket No.	67838.00217

Mail Stop Amendments
Commissioner of Patents
P. O. Box 1450
Alexandria, VA 22313-1450

RESPONSE TO NON-FINAL OFFICE ACTION

Dear Commissioner:

In response to the non-final Office action dated October 29, 2020, Applicant respectfully requests that the above-identified Patent application be amended as follows:

Amendments to the Claims begin on page 2 of this paper.

Remarks/Arguments begin on page 6 of this paper.

Amendments to the Claims

This listing of claims will replace all prior versions and listings of claims in the application.

Listing of the Claims:

1. (Currently Amended) An assembly for attachment with a vulcanized rubber article comprising:

an outer layer of elastomeric material having a visual feature; and

an adhesive layer adhered to an interface surface of the outer layer, wherein at least a portion of the outer layer adjacent the interface surface comprises ~~one or both of the outer layer or the adhesive layer has~~ a barrier material composition, and wherein the adhesive layer is formed from a material capable of chemically bonding with a surface of a vulcanized rubber article.

2. (Previously Presented) The assembly as recited in claim 1 wherein the outer layer comprises a first layer and a second layer disposed beneath the first layer.

3. (Previously Presented) The assembly as recited in claim 2 wherein the first layer is colored differently from the second layer.

4. (Previously Presented) The assembly as recited in claim 1 further comprising an intermediate layer interposed between the outer layer and the adhesive layer.

5. (Currently Amended) The assembly as recited in claim 1 ~~therein~~ wherein the barrier material composition impairs migration of a material constituent within the assembly when the assembly is attached to a vulcanized rubber article.

6. (Previously Presented) The assembly as recited in claim 1 further comprising a protective layer disposed over the outer layer and forming an outermost surface of the assembly, the protective layer formed from an optically transparent material.

7. (Previously Presented) The assembly as recited in claim 1 further comprising a cavity disposed therein.

8. (Previously Presented) The assembly as recited in claim 7 further comprising an element disposed within the cavity.

9. (Currently Amended) The assembly as recited in claim 7 ~~1~~ wherein the cavity is disposed beneath the outer layer.

10. (Previously Presented) The assembly as recited in claim 2 wherein the first layer includes one or more openings therethrough, and wherein the second layer is visible through the one or more openings.

11. (Currently Amended) A method for attaching an assembly to a surface of a vulcanized rubber article comprising the steps of;

identifying a surface of a vulcanized rubber article;

placing an assembly into contact with the identified surface, ~~,~~ wherein the assembly comprises:

an outer layer of elastomeric material, wherein the outer layer is in contact with an adhesive layer interposed between the ~~prepared~~ identified surface and the assembly that bonds the assembly to the vulcanized rubber article, and wherein ~~one of~~ the outer layer ~~or adhesive layer~~ comprises a barrier material composition to mitigate migration of material from the vulcanized rubber article.

12. (Previously Presented) The method as recited in claim 11 further comprising preparing the identified surface before the step of placing.

13. (Cancelled)

14. (Previously Presented) The method as recited in claim 11 further comprising applying pressure to the assembly after the step of placing.

15. (Cancelled)

16. (Cancelled)

17. (Cancelled)

18. (Currently Amended) The method as recited in claim 11 wherein the vulcanized rubber article is tire, wherein the identified surface is a sidewall surface of the tire, and wherein the assembly includes a cavity disposed therein for accommodating placement of an element.

19. (Currently Amended) A vulcanized rubber tire comprising:

a target surface disposed along a portion of the rubber tire;

an assembly disposed onto the target surface and comprising:

an outer layer of elastomeric material; and

an adhesive layer connected with the outer layer;

wherein at least a portion of ~~one of~~ the outer layer ~~or the adhesive layer~~ comprises a barrier material composition to mitigate migration of material from the rubber tire.

20. (Cancelled)

21 (Previously Presented) The rubber tire as recited in claim 19 wherein the assembly further comprises a cavity disposed therein.

22. (Previously Presented) The rubber tire as recited in claim 21 wherein an element is disposed within the cavity.

23. (Previously Presented) The rubber tire as recited in claim 21 wherein the cavity is disposed beneath the outer layer.

24. (Currently Amended) An assembly for attachment to a vulcanized rubber tire comprising;

an outer layer formed from an elastomeric material;

an adhesive layer bonding the assembly to portion of a vulcanized rubber tire ~~elastomeric material~~; and

a cavity disposed within the assembly for accommodating an element therein;

wherein the outer layer comprises a material composition that acts as a barrier to material migrating from the vulcanized rubber tire.

25. (Previously Presented) The assembly as recited in claim 24 wherein at least a portion of the cavity is disposed beneath the outer layer.

26. (Previously Presented) The assembly as recited in claim 24 wherein the adhesive layer is connected with the outer layer.

27. (Previously Presented) The assembly as recited in claim 24 wherein the outer layer includes an indicia along an outer surface.

28. (Cancelled)

29. (Previously Presented) The assembly as recited in claim 24 further comprising an intermediate layer disposed beneath the outer layer.

REMARKS

Applicant has amended claims 1, 5, 9, 11, 18, 19, and 24, and has cancelled claim 28. Claims 13, 15 to 17, and 20 have earlier been cancelled. Accordingly, Applicant submits that upon entry of this response that claims 1 to 12, 14, 18, 19, 21 to 27, and 29 remain pending in this patent application. Applicant not addresses each and every point raised by the Examiner in the above-noted Office action as follows.

I. Rejection Under Section 112

Claim 9 has been rejected under 35 U.S.C. §112, second paragraph, as being allegedly indefinite. Applicant has amended claim 9 to address this issue and, in view thereof, respectfully requests that the rejection of claim 9 under 35 U.S.C. §112 be reconsidered and withdrawn.

II. Rejection of Claims Under Section 102

Claims 1, 11, and 19 have been rejected under 35 U.S.C. §102 as being allegedly anticipated by DeTrano (US 5,300,164). Applicant has amended independent claims 1, 11, and 19 to recite the feature that the outer layer of the assembly comprises a barrier material composition (to mitigate the unwanted migration of material from the vulcanized rubber article or tire). Applicant submits that DeTrano fails to disclose a decorative applique construction comprising the feature not recited in the above-noted independent claims, and as such fails to properly anticipate the subject matter of such claims. In view thereof, Applicant submits that its assembly as recited in amended independent claims 1, 11 and 19 is properly novel over DeTrano, and respectfully requests that the rejection of such claims under 35 U.S.C. §102 based on DeTrano be reconsidered and withdrawn.

III. Rejection of Claims Under Section 103 Based on DeTrano

Claims 2 to 5, 10, 12, and 14 have been rejected under 35 U.S.C. §103 as being allegedly unpatentable over by DeTrano. Applicant has amended independent claims 1 and 11 in the manner described above in Section II, and submits that DeTrano fails to disclose or remotely suggest the feature noted above in Section II as recited in such claims. One having ordinary skill in the art aware of DeTrano would not find suggestion or motivation to make an assembly as recited in

Applicant's independent claims 1 and 11 wherein the outer layer comprises a barrier material composition. For this reason, Applicant submits that the subject matter as recited in amended independent claims 1 and 11 is properly patentable over DeTrano, and respectfully requests that the rejection of such claims under 35 U.S.C. §103 based on DeTrano be reconsidered and withdrawn.

IV. Rejection of Claims Under Section 103 Based on DeTrano and Miyazaki

Claim 6 has been rejected under 35 U.S.C. §103 as being allegedly unpatentable over DeTrano in view of Miyazaki (US 6,235,376). Applicant has amended independent claim 1 in the manner described above in Section II, and submits for the reasons presented above in Section III that DeTrano fails to disclose or remotely suggest the feature now recited in such claim. Miyazaki is relied upon by the Examiner for its disclosure of a protective layer (which feature is admittedly not disclosed in DeTrano). However, like DeTrano, Miyazaki also fails to disclose or remotely suggest the feature now disclosed in amended independent claim 1. For this reason, one having ordinary skill in the art taking DeTrano and Miyazaki in combination would not find suggestion or motivation to make the assembly recited in Applicant's amended independent claim 1 comprising the feature that is missing in both references.

In view thereof, Applicant submits that its assembly as recited in amended independent claim 1 is properly patentable over the combination of DeTrano and Miyazaki, and respectfully requests that the rejection of claim 6 (depending from such amended independent claim 1) under 35 U.S.C. §103 based on the combination of DeTrano and Miyazaki be reconsidered and withdrawn.

V. Rejection of Claims Under Section 103 Based on DeTrano and Parsons

Claims 7 to 9, 18, and 21 to 29 have been rejected under 35 U.S.C. §103 as being allegedly unpatentable over DeTrano in view of Parsons (US 2005/0059308). Applicant has amended independent claims 1 and 11 in the manner described above in Section II, and have also amended independent claims 19 and 24 in a similar manner. In view thereof, Applicant submits that DeTrano fails to disclose or remotely suggest the feature now recited in such amended independent claims. Parsons is relied upon by the Examiner for its disclosure of a RFID element embodied in

a label for mounting on a tire surface (which feature is admittedly not disclosed in DeTrano). However, like DeTrano, Parsons also fails to disclose or remotely suggest the feature now disclosed in amended independent claims 1, 11, 19, and 24. For this reason, one having ordinary skill in the art taking DeTrano and Parsons in combination would not find suggestion or motivation to make the assembly recited in Applicant's amended independent claims 1, 11, 19, and 24 comprising the feature that is missing in both references.

In view thereof, Applicant submits that its assembly as recited in amended independent claims 1, 11, 19, and 24 is properly patentable over the combination of DeTrano and Parsons, and respectfully requests that the rejection of the above noted claims (depending from such respective amended independent claims) under 35 U.S.C. §103 based on the combination of DeTrano and Parsons be reconsidered and withdrawn.

VI. Rejection of Claims for Nonstatutory Double Patenting

Claims 24 to 27, and 29 have been rejected on the ground of nonstatutory double patenting in view of claims 1 to 3, and 7 to 9 of U.S. Patent No. 10,137,741. Applicant encloses herewith a property prepared Terminal Disclaimer and, in view thereof, respectfully requests that the rejection of claims 14 to 27, and 29 be reconsidered and withdrawn.

VII. Conclusion and Request for Examiner Interview

For all the reasons presented above, Applicant respectfully requests that the rejections of the claims under 35 U.S.C. §§112, 102 and 103, and for nonstatutory double patenting, be reconsidered and withdrawn, and that the claims pending in this patent application be passed to allowance.

Should, after considering the Applicant's amendments and reasons presented herein, the Examiner feel that the application claims are not in proper condition for allowance, Applicant respectfully requests that the Examiner please contact its below-designated patent attorney for the purposes of advancing the efficient prosecution of this patent application.

The Commissioner is hereby authorized to charge any fees, which may be required, or credit any overpayment, to Deposit Account No. 19-2814.

Respectfully submitted,

Date: March 1, 2021

/ Grant T. Langton/

Grant T. Langton
Registration No. 39,739
Snell & Wilmer L.L.P.
One Arizona Center
400 East Van Buren Street
Suite 1900
Phoenix, AZ 85004-2202
ipladocket@swlaw.com
(213) 929-2505 (Direct)
(213) 929-2525 (Fax)

CUSTOMER NUMBER

125632

Exhibit I

IN THE UNITED STATES PATENT AND TRADEMARK OFFICE

Appl. No.:	17/084,483	Confirmation No.:	7585
Inventor(s):	Keith George Ferry	Group Art Unit:	2855
Filed:	10/29/2020	Examiner:	Jenkins, Jermaine L.
Title:	SENSOR ASSEMBLIES AND SYSTEMS FOR MONITORING A DYNAMIC OBJECT	Docket No.	90608.01000

Mail Stop Amendments
Commissioner of Patents
P. O. Box 1450
Alexandria, VA 22313-1450

RESPONSE TO NON-FINAL OFFICE ACTION

Dear Commissioner:

In response to the Non-Final Office Action of November 23, 2023, Applicant respectfully requests that the above-identified patent application be amended as set forth below:

Amendments to the Claims begin on page 2 of this paper.

Remarks/Arguments begin on page 12 of this paper.

Amendments to the Claims

This listing of claims will replace all prior versions and listings of claims in the application.

Listing of the Claims:

1. (Currently Amended) A sensor assembly configured for attachment with an object that is rotated in use, the sensor assembly comprising:

a housing comprising an outer surface and an internal cavity that is enclosed within the housing;

an electrical sensor device that is disposed within the internal cavity and attached therein to prevent movement of the device within the internal cavity, wherein the internal cavity comprises an unfilled open space above or below the electrical sensor device in the housing, wherein the electrical sensor device is configured to sense, transmit and/or receive information regarding surrounding conditions, orientation and/or location when the sensor assembly is attached with the ~~an~~ object and the object is rotated in use; and

a retaining member that is configured to accommodate attachment of the housing therewith, wherein the retaining member has an outside surface configured for attachment to rotate with the object when the object is rotated in use.

2. (Original) The sensor assembly as recited in claim 1, wherein the housing outer surface includes one or more display features or indicia that are viewable to a user when the housing is attached with the retaining member.

3. (Original) The sensor assembly as recited in claim 1, wherein the housing comprises a top cover, a wall structure, and a base section that define the internal cavity, and wherein the top cover, wall structure and base section may be formed from the same or different materials, and wherein one or more of the top cover, wall section, and base section may separate or integral with one another.

4. (Original) The sensor assembly as recited in claim 1, wherein one of the top cover or base section is removably attached with the wall structure to facilitate installation and/or removal of the electrical sensor device from the internal cavity.

5. (Currently Amended) The sensor assembly as recited in claim 1, wherein the electrical sensor device is attached within the internal cavity by one or more surface features within the cavity that contact the electrical sensor device to retain its position therein~~, and wherein there is open space above and below the electrical sensor device within the internal cavity~~.

6. (Original) The sensor assembly as recited in claim 1, wherein the electrical sensor device is encapsulated by the inner cavity of the housing during a process of making the housing that operates to retain the position of the electrical sensor device within the housing.

7. (Original) The sensor assembly as recited in claim 1, wherein the housing and retaining member are configured having a complementary shape to facilitate attachment of the housing with the retaining member.

8. (Original) The sensor assembly as recited in claim 7, wherein the housing comprises a wall structure that surrounds the internal cavity, and wherein the retaining member comprises a wall structure having an open chamber that is configured to accommodate the housing wall structure therein to provide attachment therewith.

9. (Original) The sensor assembly as recited in claim 1, wherein the retaining member is formed from an elastomeric material that mitigates transmission of shock forces from the object to the housing when the retaining member is attached to the object and the housing is attached to the retaining member.

10. (Original) The sensor assembly as recited in claim 1, wherein the housing includes an opening through the outside surface to the internal cavity, and further includes a filter that is positioned to filter air passing into the internal cavity before reaching the electrical sensor device.

11. (Original) A sensing system comprising the sensor assembly as recited in claim 1, wherein the sensing system comprises a receiver that is external from the object and that is configured to receive data from the electrical sensor device by wireless communication.

12. (Original) The sensing system as recited in claim 11, wherein the electrical sensor device comprises an accelerometer sensor connected therewith and is configured to send data from the accelerometer sensor wirelessly to the external receiver.

13. (Currently Amended) The sensing system as recited in claim 12, wherein the object is a vehicle tire, and wherein one or more parameter selected from the group consisting of tire diameter, tire tread depth, tire radial load, slip, road or soil conditions, strain, vehicle camber and/or toe alignment is determined from the accelerometer sensor data ~~measuring in a radial direction of the vehicle tire~~.

14. (Original) The sensing system as recited in claim 13, wherein one or more of the tire diameter, tire tread depth, and tire radial load is determined from data including a specific rotational speed of the tire at a given vehicle velocity.

15. (Currently Amended) The sensing system as recited in claim 12, wherein the object is a vehicle tire and a radial load experienced by the tire is determined from data comprising an interval of radial deformation ~~and using a correction coefficient~~.

16. (Previously Presented) The sensing system as recited in claim 11, wherein the electrical sensor device or receiver comprises a global positioning device.

17. (Previously Presented) The sensing system as recited in claim 16, wherein the object is a vehicle tire and a location of the vehicle tire is determined from information provided by one or both of the global positioning device and interaction with the electrical sensor device.

18. (Original) The sensing system as recited in claim 11, wherein the electrical sensor device comprises a gyroscope.

19. (Original) The sensing system as recited in claim 18, wherein the object is a vehicle tire and information from the gyroscope is used to determine one or more parameter selected from the group consisting of tire alignment, tire orientation, tire radial load, and tire tread depth.

20. (Previously Presented) The sensor assembly as recited in claim 1, wherein the electrical sensor device comprises:

a printed circuit board comprising electrical circuitry;

a portable power source for providing power to the electrical sensor device;

at least one sensor element; and

an antenna for receiving and/or transmitting information from the electrical sensor device.

21. (Original) The sensor assembly as recited in claim 20, wherein the electrical sensor device comprises one or both of a storage element and a processor.

22. (Original) The sensor assembly as recited in claim 20, wherein the electrical sensor device comprises one or both of an accelerometer sensor and a global positioning device.

23. (Original) The sensor assembly as recited in claim 20, wherein the sensor element is configured to sense one or more variables selected from the group consisting of air pressure, temperature, acceleration, and orientation or location of the environment, the sensor assembly, or the object.

24. (Original) The sensor assembly as recited in claim 20, wherein the object is a vulcanized rubber vehicle tire, and wherein the retaining member is attached to an inside surface of the vehicle tire or an element attached with the tire that rotates with the tire.

25. (Original) The sensor assembly as recited in claim 24, wherein the retaining member is attached to a wheel that the tire is mounted on.

26. (Previously Presented) The sensor assembly as recited in claim 24, wherein the retaining member is attached to a valve stem or valve cap of a wheel that the tire is mounted on.

27. (Original) The sensor assembly as recited in claim 24, wherein the retaining member is attached to the inside surface of the vehicle tire by an adhesive layer after the vehicle tire has been vulcanized.

28. (Currently Amended) A sensor assembly and sensing system for use with an object that rotates in use comprising:

a housing comprising an outer structure that defines an open internal cavity therein,

an electrical sensor device disposed within the internal cavity and having a fixed placement therein by ~~through the use of~~ one or more surface features of the housing configured to ~~of the internal cavity in~~ contact ~~with~~ the electrical sensor device, wherein the electrical sensor device is configured to monitor and transmit and/or receive information regarding surrounding conditions, orientation and/or location, wherein the electrical sensor device comprises:

a portable power source;

a sensor; and

an antenna for transmitting and/or receiving information relating to the operating parameter being monitored by the sensor;

a retaining member having an outside surface configured for attaching with a surface of the object or an element connected with the object to rotate with the object in use, wherein the retaining member is configured to accommodate placement a portion of the housing therein to provide an attachment between the housing and the retaining member; and

a receiver external from the object ~~vehicle tire~~ that is configured to receive information from the electrical sensor device wirelessly.

29. (Original) The sensor assembly and sensing system as recited in claim 28, comprising an external transmitter for sending information wirelessly to the electronic sensor device.

30. (Currently Amended) A sensor assembly and sensing system for use with an object that rotates in use comprising:

a housing comprising an outer structure that defines an open internal cavity therein,

an electrical sensor device disposed within the internal cavity and having a fixed placement therein through the use of one or more surface features of the internal cavity in contact with the electrical sensor device, wherein the electrical sensor device is configured to monitor and transmit and/or receive information regarding surrounding conditions, orientation and/or location, wherein the electrical sensor device comprises:

a portable power source;

a sensor; and

an antenna for transmitting and/or receiving information relating to the operating parameter being monitored by the sensor;

a retaining member having an outside surface configured for attaching with a surface of the object or an element connected with the object to rotate with the object in use, wherein the retaining member is configured to accommodate placement a portion of the housing therein to provide an attachment between the housing and the retaining member; and

a receiver external from the object that is configured to receive information from the electrical sensor device wirelessly;

~~The sensor assembly and sensing system as recited in claim 28,~~ wherein the housing includes a wall structure having a top cover at a first axial end of the wall structure and a base section at an opposed second axial of the wall structure, wherein the retaining member has a wall structure and an open chamber defined therein that is configured to complement the housing wall structure to accept placement of the housing within the retaining member and attachment therewith.

31. (Original) The sensor assembly and sensing system as recited in claim 28, wherein one of the top cover or the bottom section are made separately from the wall section and are attached to the wall section after the electrical sensor device has been installed within the housing internal cavity.

32. (Currently Amended) The sensor assembly and sensing system as recited in claim 28, wherein the internal cavity comprises an open space ~~exists~~ above or ~~and~~ below the electrical sensor device ~~when~~ disposed within the internal cavity.

33. (Original) The sensor assembly and sensing system as recited in claim 28, wherein the retaining member is formed from an elastomeric material that mitigates transmission of shock forces received from the object when attached to the object before reaching the housing attached with the retaining member.

34. (Original) The sensor assembly and sensing system as recited in claim 28, wherein the electrical sensor device comprises an accelerometer sensor and is configured to send data from the accelerometer sensor wirelessly to the external receiver.

35. (Previously Presented) The sensor assembly and sensing system as recited in claim 34, wherein the object is a vehicle tire and the system is configured to determine one or more parameters consisting of a tire diameter, slip, strain, road conditions or soil conditions, a tire tread depth, a tire radial load, and vehicle camber and/or toe alignment from the accelerometer sensor data.

36. (Previously Presented) The sensor assembly and sensing system as recited in claim 34, wherein the object is a vehicle tire and the system is configured to determine one or more of a tire diameter, a tire tread depth, slip, strain, road or soil conditions, and a tire radial load from data including a specific rotational speed of the tire at a given vehicle velocity.

37. (Previously Presented) The sensor assembly and sensing system as recited in claim 28, wherein the electrical sensor device or receiver comprises a global positioning device.

38. (Original) The sensor assembly and sensing system as recited in claim 37, wherein the object is a vehicle tire and the system is configured to determine a location of the vehicle tire from information provided by the global positioning device.

39. (Original) The sensor assembly and sensing system as recited in claim 28, wherein the electrical sensor device comprises a gyroscope.

40. (Original) The sensing system as recited in claim 39, wherein the object is a vehicle tire and information from the gyroscope is used to determine one or more of tire alignment, tire orientation, tire radial load, and tire tread depth.

41. (Currently Amended) A method for using a sensor assembly and sensing system with an object that rotates in use comprising the steps of:

installing an electrical sensor device within an internal cavity of a housing, wherein the housing includes an outer structure that defines the internal cavity, and wherein the electrical sensor device comprises a sensor, a portable power source, an antenna, a printed circuit board, and related electrical circuitry, wherein the housing comprises an opening extending from an outer surface of the housing to the internal cavity;

attaching the housing after the step of installing to a retaining member, wherein the retaining member is configured to accommodate attachment with the housing by mechanical or bonding technique, wherein the retaining member is connected with the object before or after formation of the object; and

monitoring an operating parameter of the object through the use of the electrical sensing device, wherein information related to the operating parameter is wirelessly transmitted from the electrical sensing device to a receiver that is external from the sensor assembly.

42. (Original) The method as recited in claim 41, wherein during the step of installing, the housing includes a wall structure having an opening through which the electrical sensor device is installed and, after the step of installing, the opening is closed by attaching a top cover or bottom section to the opening.

43. (Original) The method as recited in claim 41, wherein during the step of installing, the electrical sensor device is attached in place within the internal cavity by contact between the electrical sensor device and one or more surface features in the internal cavity.

44. (Previously Presented) The method as recited in claim 41, wherein the object is a made from vulcanized rubber, and before the step of attaching, the retaining member is attached with the object or an element that rotates with the object before or after the object has been formed.

45. (Previously Presented) The method as recited in claim 44, wherein the retaining member is attached to a surface of the object by use of an adhesive layer or during the formation of the object.

46. (Original) The method as recited in claim 45, wherein the retaining member is attached to the object after the step of attaching the housing to the retaining member.

47. (Original) The method as recited in claim 45, wherein the retaining member is attached to the object by applying hand pressure onto the retaining member once placed into contact with the surface of the object to cause the adhesive layer to form an attachment therebetween.

48. (Original) The method as recited in claim 44, wherein the object is a vehicle tire, and wherein the retaining member is attached to a surface that is inside of the vehicle tire.

49. (Original) The method as recited in claim 44, wherein the retaining member is mechanically attached to an element that is connected to and that rotates with the object.

50. (Original) The method as recited in claim 41, wherein during the step of attaching, the housing is positioned relative to the retaining member according to a display feature that is positioned on the housing.

51. (Original) The method as recited in claim 41, wherein during the step of monitoring, the sensor monitors operating parameters comprising one or more of operating conditions, orientation, and location and transmits by use of the antenna information related to the monitored

operating parameter to the receiver, and wherein the electrical device is configured to receive information transmitted from an external device to change one or more feature of the electrical sensor device.

52. (Original) The method as recited in claim 41, wherein the sensor assembly electrical sensor device comprises an accelerometer sensor.

53. (Currently Amended) The method as recited in claim 52, wherein the object is a vehicle tire, and wherein during the step of monitoring, ~~on~~ one or more of a tire outside diameter, a tire tread depth, slip, strain, road or soil conditions, a tire radial load, and a vehicle camber and/or toe alignment parameter is determined from information sent wirelessly from the sensor assembly.

54. (Previously Presented) The method as recited in claim 52, wherein the object is a vehicle tire, and wherein during the step of monitoring, one or more of a tire outside diameter, a tire tread depth, slip, strain, road or soil conditions, and a tire radial load is determined from information relating to a specific rotational speed of the tire at a given vehicle velocity.

55. (Previously Presented) The method as recited in claim 41, wherein the object is a vehicle tire and the electrical sensor device or receiver comprises a global positioning device, and wherein the step of monitoring a location of the tire is determined from information provided by the global positioning device.

56. (Original) The method as recited in claim 41, wherein the electrical sensor device comprises a gyroscope.

57. (Original) The sensing system as recited in claim 56 wherein the object is a vehicle tire and information from the gyroscope is used to determine one or more of tire alignment, tire orientation, tire radial load, and tire tread depth.

REMARKS

Applicant has amended claims 1, 5, 13, 15, 28, 30, 32, 41, and 53, and has not cancelled any claims. Accordingly, upon entry of this response Applicant submits that claims 1 to 57 are pending in this patent application. Applicant now addresses the issues raised in the above-identified Office action as follows.

I. Claim Rejection Under Section 112

Claim 1 to 40 have been rejected 35 U.S.C. §112, second paragraph, as allegedly being indefinite for reasons noted by the Examiner. Applicant has amended claims 1 and 28 to address the issues pointed out by the Examiner and respectfully requests that the rejection of these claims and the claims depending therefrom under 35 U.S.C. §112 be reconsidered and withdrawn.

II. Provisional Claim Rejection on the Ground of Nonstatutory Double Patenting

Claims 1 to 57 have been provisional rejection on the ground of nonstatutory double patenting over noted claims of copending US Patent Application No. 16/671,105. Applicant encloses herewith a properly executed Terminal Disclaimer and respectfully requests that in view thereof that this basis of rejection be reconsidered and withdrawn.

III. Rejection of Claims Under Section 102

Claims 1, 3, 4, 6 to 8, 11 to 15, 20 to 29, 31, 34 to 36, 41 to 49, and 51 to 54 have been rejected under 35 U.S.C. §102 as being allegedly anticipated by Saito (US Pub 2019/0184733). Applicant has amended independent claims 1, 28, and 41 to better clarify the nature of Applicant's sensor apparatus and system. Specifically, independent claim 1 has been amended to recite, *inter alia*, the feature that the housing internal cavity comprises an unfilled open space above or below the electrical sensor device in the housing internal cavity. Independent claim 28 has been amended to recite, *inter alia*, the feature that the housing comprises one or more surface features configured to contact the electrical sensor device, e.g., to prevent movement of the electrical sensor device within the housing internal cavity. Independent claim 41 has been amended to recite, *inter alia*, the feature that the housing comprises an opening extending from an outer surface of the housing to the internal cavity.

Saito discloses a tire-mounted sensor comprising an accommodation structure (22f – with reference to FIG. 2) to accommodate the respective components of the sensor so as to be covered with the resin sealing portion (22fb). Paragraph [0046] recites the housing 22fa configures an accommodation chamber that accommodates the different components of the sensor. While Saito discloses the feature of an accommodation structure to accommodate the different components of the sensor, Saito fails to expressly or implicitly disclose the that the housing comprises one or more surface features configured to contact the electrical sensor device to prevent movement of the electrical sensor device within the housing internal cavity as presently recited in Applicant's amended independent claim 28.

Also, Saito discloses that the sensor components disposed in the accommodation structure (22f) are filled with the resin sealing portion (22fb), which is clearly illustrated in FIG. 3, to protect the sensor components, i.e., the sensor components are encapsulated within the accommodation structure by the resin sealing portion. Accordingly, Saito fails to expressly or implicitly disclose the feature that the housing internal cavity includes an unfilled open space above or below the electrical sensor device disposed inside the internal cavity as presently recited in Applicant's amended independent claim 1.

As noted above, Saito discloses a tire-mounted sensor construction comprising sensor components disposed in the accommodation structure that is filled with the resin sealing portion (22fb) for purposes of protecting the sensor components. Accordingly, Saito also necessarily fails to disclose the feature that the housing comprises an opening extending from an outer surface of the housing to the internal cavity as presently recited in Applicant's amended independent claim 41, which is not surprising given the intent and purpose of Saito to have a resin filled accommodation structure (22f), i.e., the feature of an opening in the housing would be inconsistent and incompatible with the resin filled housing of Saito.

For a reference to properly anticipate the subject matter of a claim the reference must disclose each and every feature recited in such claim. For all of the reasons presented above, Applicant submits that Saito fails to disclose each and every one of the features presently recited in amended independent claims 1, 28, and 41, and for this reason Applicant submits that its sensor apparatus and system as recited in such amended independent claims is properly novel and not anticipated by Saito. In view thereof, Applicant respectfully requests that the rejection of amended independent claims 1, 28, and 41 (and any rejected claims depending respectively

therefrom) under 35 U.S.C. §102 based on Saito be reconsidered and withdrawn.

IV. Rejection of Claims Under Section 103 Based on Saito and Brusarosco

Claims 2, 5, 9, 32, 33, and 50 have been rejected under 35 U.S.C. §103 as being allegedly unpatentable over Saito in view of Brusarosco (US Pub 2018/018620). Applicant has amended independent claims 1, 28, and 41 as described above in Section IV, and submits that Saito fails to disclose or remotely suggest the features of recited in such claims for the same reasons presented in Section III,

Brusarosco discloses a method for installing a monitoring device in a tire and is relied on by the Examiner to allegedly disclose features admittedly not disclosed in Saito such as display features or indicia on the housing outer surface, and the existence of an open space in the housing internal cavity above and/or below the electrical sensor device.

With respect to amended independent claim 1, Applicant submits that Saito (for the reasons presented above in Section III) necessarily fails to disclose the feature of the housing internal cavity including an unfilled open space above or below the electrical sensor device disposed inside the internal cavity as this is contrary to the fundamental structure of Saito comprising a resin-filled housing for the purpose of protecting the sensor components. Applicant submits that any modification of Saito to include any unfilled open space in the housing of Saito based on Brusarosco would frustrate the purpose and intent of Saito and its resin-filled housing to protect the sensor components. Thus, Applicant respectfully submits that the combination of the Saito with Brusarosco for the purpose described above is improper as such combination would result in a bizarre situation where any unfilled open space in the accommodation structure of Saito would be contrary to the purpose and intent of Saito and thus frustrate the purpose of Saito's sensor construction that is intentionally filled with resin to protect the sensor components.

MPEP § 2143.01(V) states "[i]f proposed modification would render the prior art invention being modified unsatisfactory for its intended purpose, then there is no suggestion or motivation to make the proposed modification. In re Gordon, 733 F.2d 900, 221 USPQ 1125 (Fed. Cir. 1984)" (emphasis added). "If the proposed modification or combination of the prior art would change the principle of operation of the prior art invention being modified, then the teachings of the references are not sufficient to render the claims prima facie obvious. *In re Ratti*, 270 F.2d 810, 123 USPQ 349 (CCPA 1959)" (emphasis added). Thus, for all the reasons

presented above, the Examiner's combination of Brusarosco with Saito (to modify Saito to have an unfilled open space) frustrates Saito's principal of operation and is thereby improper.

With respect to amended independent claim 28, Applicant submits that neither Saito (for the reasons presented above in Section IV) nor Brusarosco taken alone or in combination disclose or suggest the feature presently recited in such claim of the housing comprising one or more surface features configured to contact the electrical sensor device to prevent movement of the electrical sensor device within the housing internal cavity.

With respect to amended independent claim 41, Applicant submits that Saito (for the reasons presented above in Section III) necessarily fails to disclose the feature of the housing having an opening extending from an outer surface of the housing to the internal cavity as this is contrary to and inconstant with the fundamental structure of Saito comprising a resin-filled housing for the purpose of protecting the sensor components, i.e., where any such opening would serve no purpose and be inconsistent as used with a resin-filled housing. Applicant submits that any modification of Saito to include any opening in the housing of Saito to inside the housing based on Brusarosco would serve no purpose in Saito. In fact, any such opening extending into the housing would operate to frustrate the purpose and intent of Saito and its resin-filled housing to protect the sensor components. Thus, Applicant respectfully submits that the combination of the Saito with Brusarosco for the purpose described above is improper as such combination would result in a bizarre situation where any opening in the housing to inside the housing would be contrary to the purpose and intent of Saito and thus frustrate the purpose of Saito's sensor construction that is intentionally filled with resin to protect the sensor components. Accordingly, for the same reasons presented above with respect to independent claim 1, Applicant submits that the combination of Saito and Brusarosco frustrates Saito's principal of operation and is thereby improper.

For all of the reasons presented above, Applicant submits that one having ordinary skill in the art taking Saito and Brusarosco in combination (as such combination is improper) would not find motivation or suggestion to make Applicant's sensor assembly and/or system comprising the above-described features recited in amended independent claims 1, 28, and 41. In view thereof, Applicant submits that the subject matter recited in amended independent claims 1, 28, and 41 is properly patentable and nonobvious over the combination of Saito and Brusarosco, and respectfully requests that the rejection of the above-noted claims (depending

from respective amended independent claims 1, 28, and 41) under 35 U.S.C. §103 based on the combination of Saito and Brusarosco be reconsidered and withdrawn.

V. Rejection of Claims Under Section 103 Based on Saito and Laird

Claim 10 has been rejected under 35 U.S.C. §103 as being allegedly unpatentable over Saito in view of Laird (US Pub 2011/025487). Applicant has amended independent claim 1 in the manner described above in Section III, and submits that Saito fails to disclose or remotely suggest the features of such claim for the same reasons presented in Section II.

Laird discloses a tire pressure sensor and is relied on by the Examiner to allegedly disclose a housing having an opening through an outside surface to a cavity, which feature is admittedly not disclosed by Saito. For the same reasons presented above in Section IV, Applicant submits that the combination of Saito with Laird would be inconstant with use of the resin-filled housing of Saito that is intentionally provided for the purpose of protecting the sensor components inside the housing. Thus, any such proposed modification of Saito based on Lin would operate to frustrate the intent and principal of operation of Saito and is improper as explained above in Section IV. In view thereof, Applicant submits that claim 10 is properly patentable and nonobvious over the combination of Saito and Laird, and respectfully requests that the rejection of claim 10 under 35 U.S.C. §103 based on the combination of Saito and Laird be reconsidered and withdrawn.

VI. Rejection of Claims Under Section 103 Based on Saito and Lin

Claims 16 to 18, 37 to 39, and 55 to 57 have been rejected under 35 U.S.C. §103 as being allegedly unpatentable over Saito in view of Lin (US Pub 2019/0187027). Applicant has amended independent claims 1, 28, and 41 in the manner described above in Section III, and submits that Saito fails to disclose or remotely suggest the features of such amended independent claims for the same reasons presented in Section III.

Lin discloses a tire sensor system and is relied on by the Examiner to allegedly disclose an electrical sensor device comprising a global positioning device, which feature is admittedly not disclosed in Saito. However, like Saito, Lin also fails to disclose a sensor assembly or system comprising the features presently recited in each of amended independent claims 1, 28, and 41 as explained above in Section III. Further, Applicant submits that any proposed

combination of Lin to modify Saito to include features recited in such amended independent claims would frustrate the principal of operation of Saito for the same reasons explained above in Section IV.

In view of the above, Applicant submits that one skilled in the art taking Saito and Lin in combination would not find motivation or suggestion to make Applicant's sensor assembly and system comprising the features presently recited in amended independent claims 1, 28, and 41, which features are missing in both references. For all of these reasons, Applicant submits that its sensor assembly and system as recited in amended independent claims 1, 28, and 41 is properly patentable and nonobvious over the combination of Saito and Lin, and respectfully requests that the rejection of the above-noted claims (depending from respective amended independent claims 1, 28, and 41) under 35 U.S.C. §103 based on the combination of Saito and Lin be reconsidered and withdrawn.

VII. Allowable Subject Matter

Claim 30 has been identified by the Examiner as being allowable if rewritten into independent form. Applicant acknowledged with appreciation the Examiner's noted allowability of claim 30 and has rewritten claim 30 to recite the features of independent claim 28 to thereby place claim 30 into independent form. In view thereof, Applicant submits that amended claim 30 is in proper allowable form and hereby accepts the same.

VIII. Conclusion and Examiner Interview Request

For all of the reasons presented above, Applicant respectfully requests that the claim rejections under 35 U.S.C. §§§ 112, 102 and 103, and on the grounds of nonstatutory double patenting, all be reconsidered and withdrawn, and that the claims pending in this patent application be passed to allowance along with claim 30.

In the event that the Examiner, after evaluating Applicant's response, believes that the claims as presented therein are not in proper condition for allowance, Applicant respectfully requests that the Examiner please contact its below-designated patent attorney for the purposes of discussing the same in the spirit of most efficiently advancing this patent application to allowance.

The Commissioner is hereby authorized to charge any fees, which may be required, or credit any overpayment, to Deposit Account No. 19-2814.

Respectfully submitted,

Date: May 23, 2023

/ Grant T. Langton/

Grant T. Langton
Registration No. 39,739
Snell & Wilmer L.L.P.
1 East Washington Street
Suite 2700
Phoenix, AZ 85004
ipladocket@swlaw.com
(213) 929-2505 (Direct)
(213) 929-2525 (Fax)

CUSTOMER NUMBER

125632

4890-8645-5142.1

Exhibit J

US 20190184773A1

(19) United States

(12) Patent Application Publication

SAITO

(10) Pub. No.: US 2019/0184773 A1

(43) Pub. Date: Jun. 20, 2019

(54) **TIRE-MOUNTED SENSOR**

(71) Applicant: **DENSO CORPORATION**, Kariya-city (JP)

(72) Inventor: **Toshiaki SAITO**, Kariya-city (JP)

(73) Assignee: **DENSO CORPORATION**, Kariya-city (JP)

(21) Appl. No.: **16/282,379**

(22) Filed: **Feb. 22, 2019**

Related U.S. Application Data

(63) Continuation of application No. PCT/JP2017/031839, filed on Sep. 4, 2017.

(30) **Foreign Application Priority Data**

Sep. 7, 2016 (JP) 2016-174876

Publication Classification

(51) **Int. Cl.**

B60C 23/04	(2006.01)
B60C 19/00	(2006.01)
B60W 40/06	(2006.01)
G01H 1/00	(2006.01)
H01Q 1/22	(2006.01)

(52) **U.S. Cl.**

CPC ***B60C 23/0422*** (2013.01); ***B60C 19/00*** (2013.01); ***B60C 23/0493*** (2013.01); *B29D 2030/0072* (2013.01); ***G01H 1/00*** (2013.01); ***H01Q 1/2241*** (2013.01); ***B60W 40/06*** (2013.01)

(57) **ABSTRACT**

A tire-mounted sensor is to be mounted to an inner wall surface of a tire, and includes a sensor device having a vibration detection element to detect vibration applied to the tire, a circuit board having the vibration detection element thereon, an antenna attached to the circuit board, and an accommodation structure accommodating the vibration detection element, the circuit board, and the antenna. At least a part of the accommodation structure is made of a flexible material to attenuate the vibration applied to the tire. The tire-mounted sensor further includes a vibration transmission member configured to transmit the vibration applied to the tire to the vibration detection element.

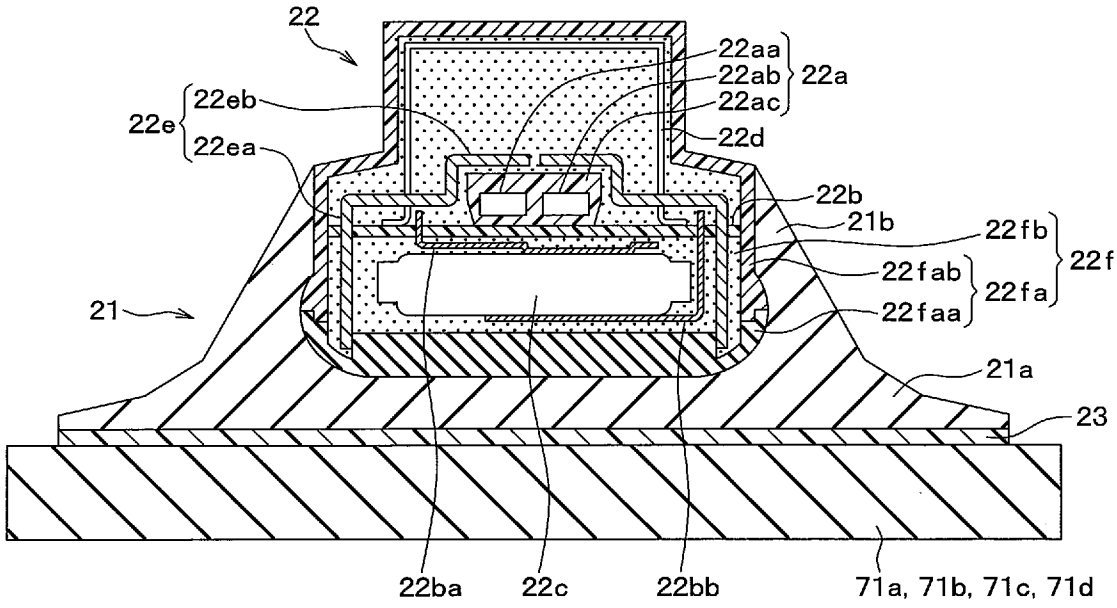

FIG. 1

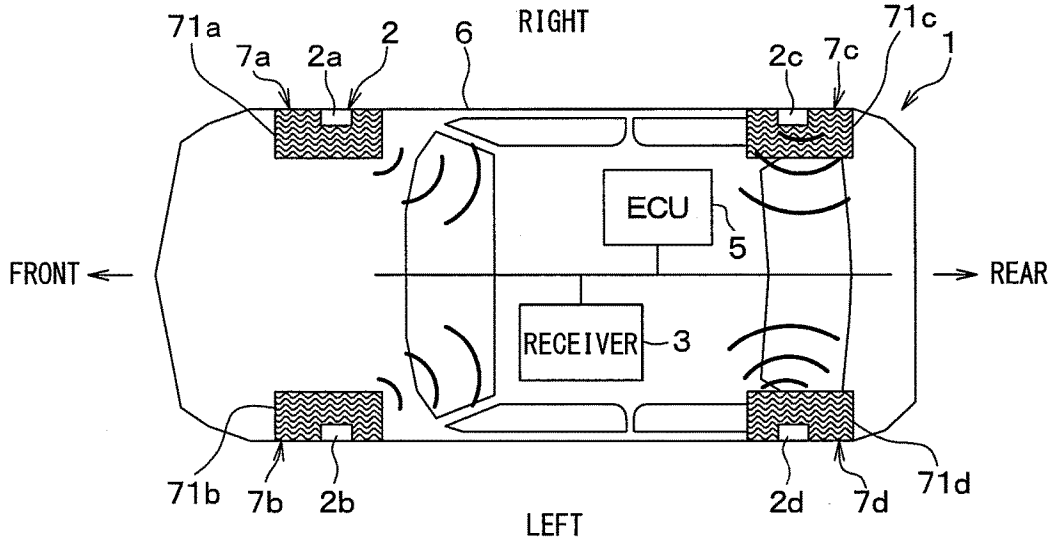
71a
7a
2a
2
6
RIGHT
2c
7c
71c
1
ECU
5
FRONT
REAR
RECEIVER
3
71b
7b
2b
LEFT
2d
7d
71d

FIG. 2

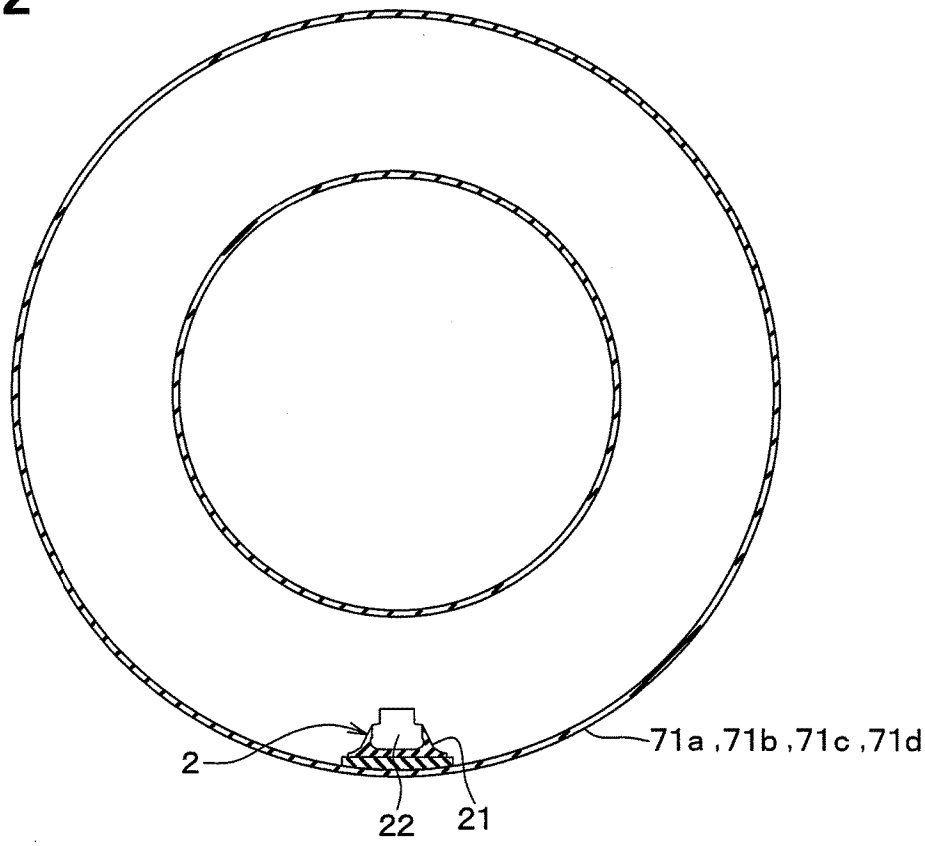
2
22
21
71a ,71b ,71c ,71d

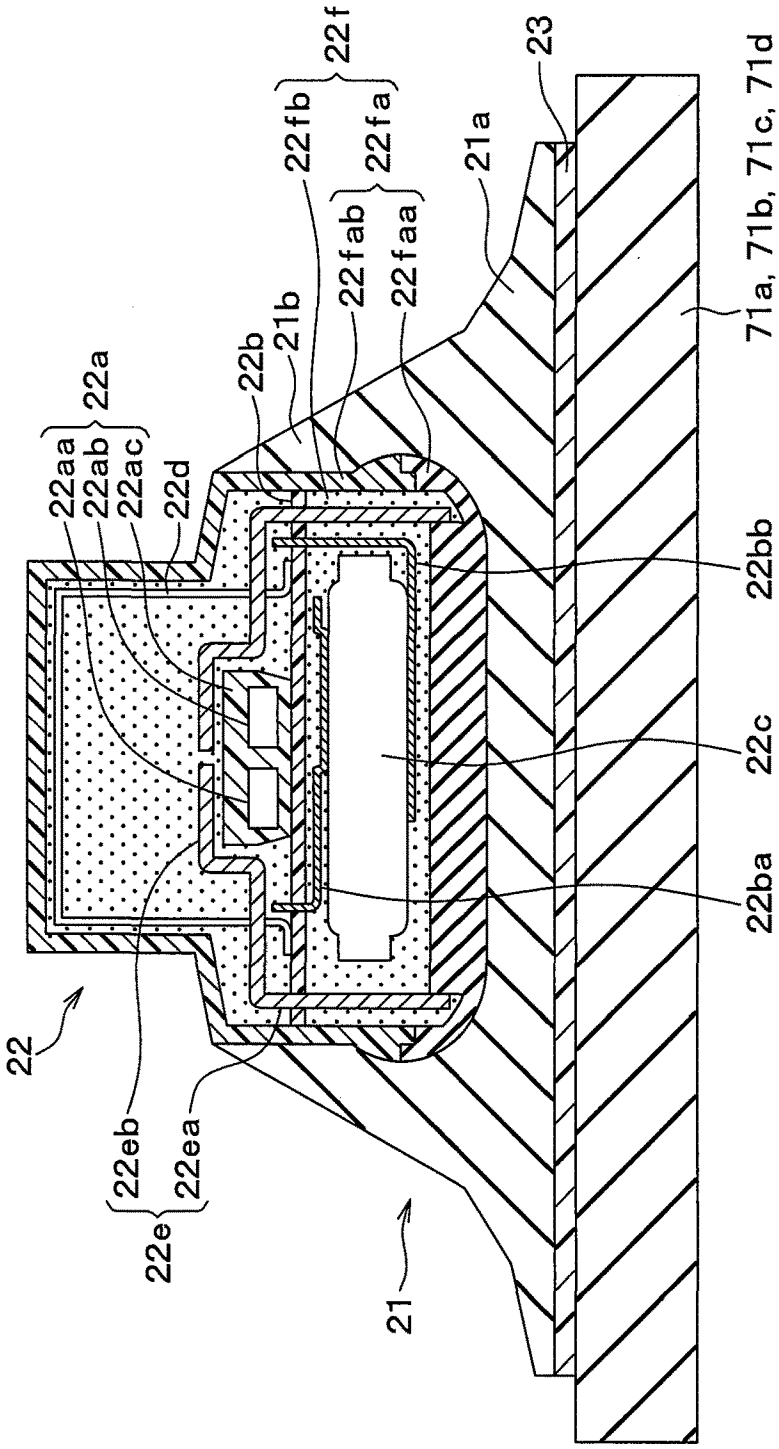
22
22aa
22ab
22ac
22a
22d
22b
21b
22fab
22faa
22fb
22fa
22f
21a
23
71a, 71b, 71c, 71d
22bb
22c
22ba
22eb
22ea
22e
21

FIG. 3

FIG. 4

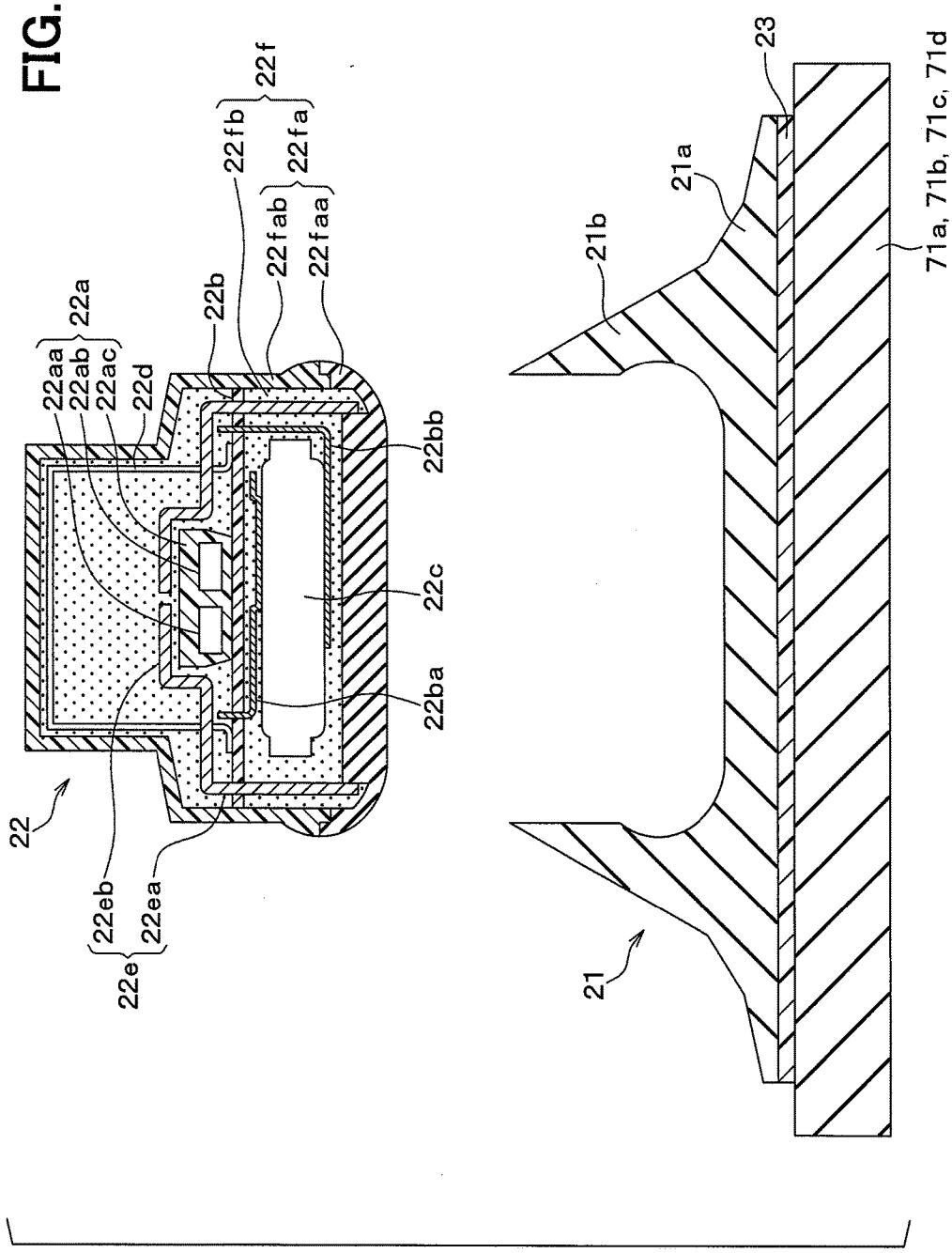
22
22e
22eb
22ea
22aa
22ab
22ac
22a
22d
22b
22fb
22f
22fab
22fa
22faa
22bb
22c
22ba
21
21b
21a
23
71a, 71b, 71c, 71d

FIG. 5

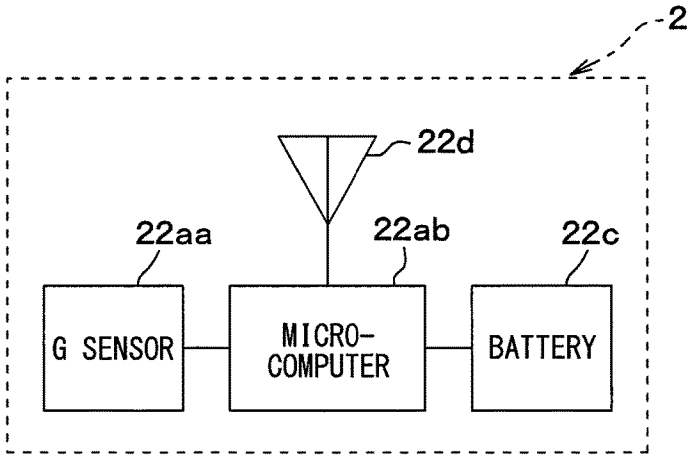
2
22d
22aa
22ab
22c
G SENSOR
MICRO-
COMPUTER
BATTERY

FIG. 6

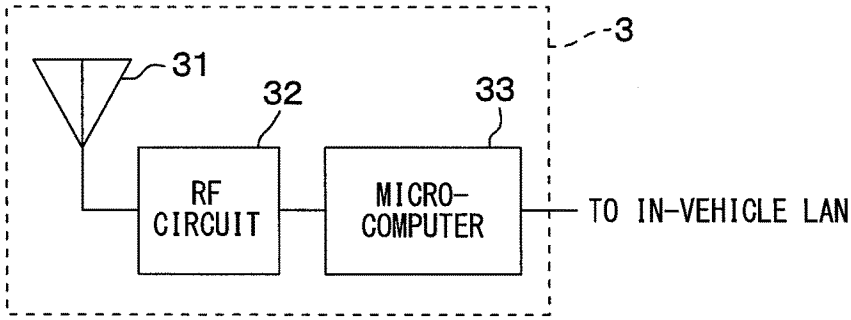
3
31
32
33
RF
CIRCUIT
MICRO-
COMPUTER
TO IN-VEHICLE LAN

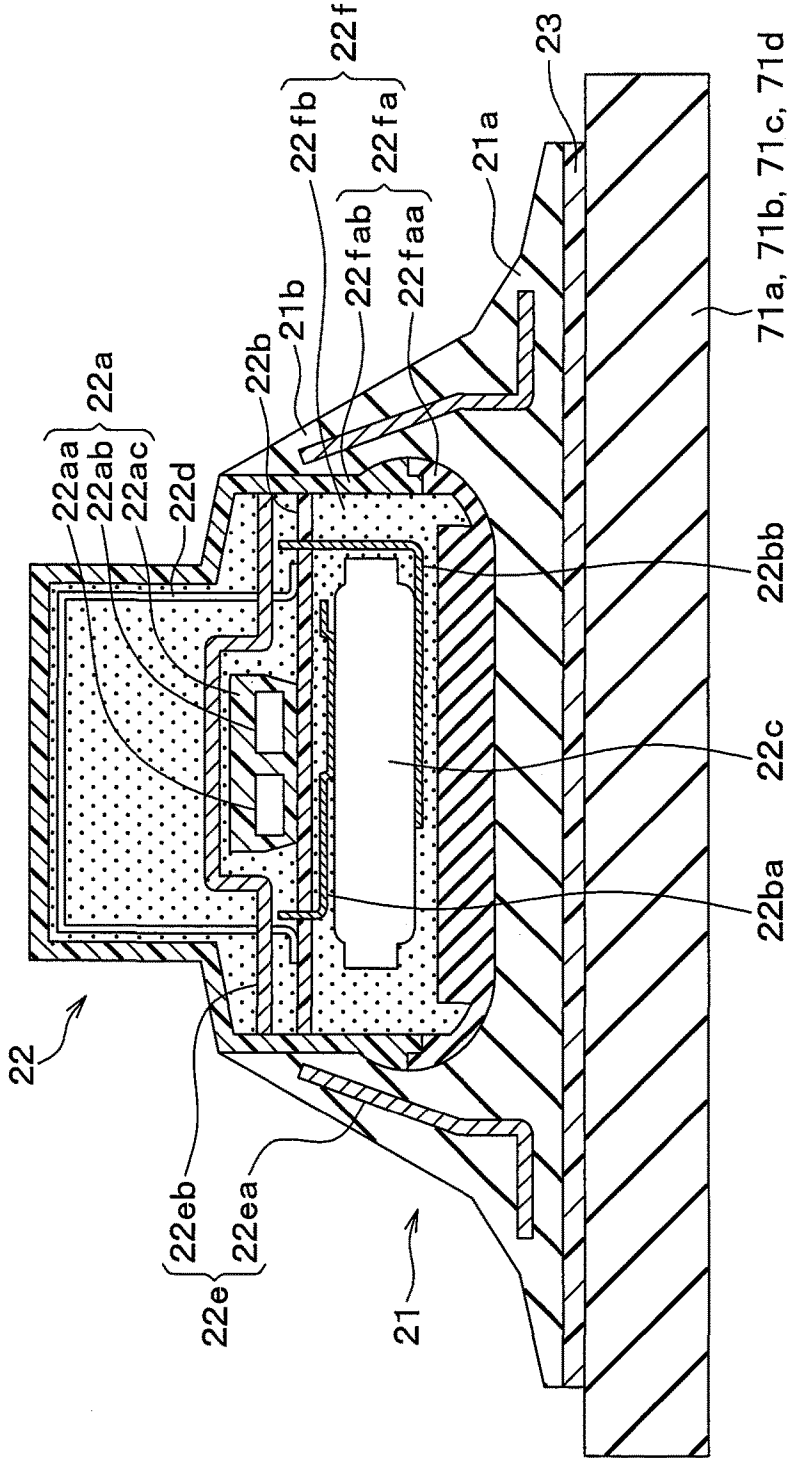
22
22aa
22ab
22ac
22a
22d
22b
21b
22fb
22f
22fab
22fa
22faa
21a
23
71a, 71b, 71c, 71d
22bb
22c
22ba
22eb
22ea
22e
21

FIG. 7

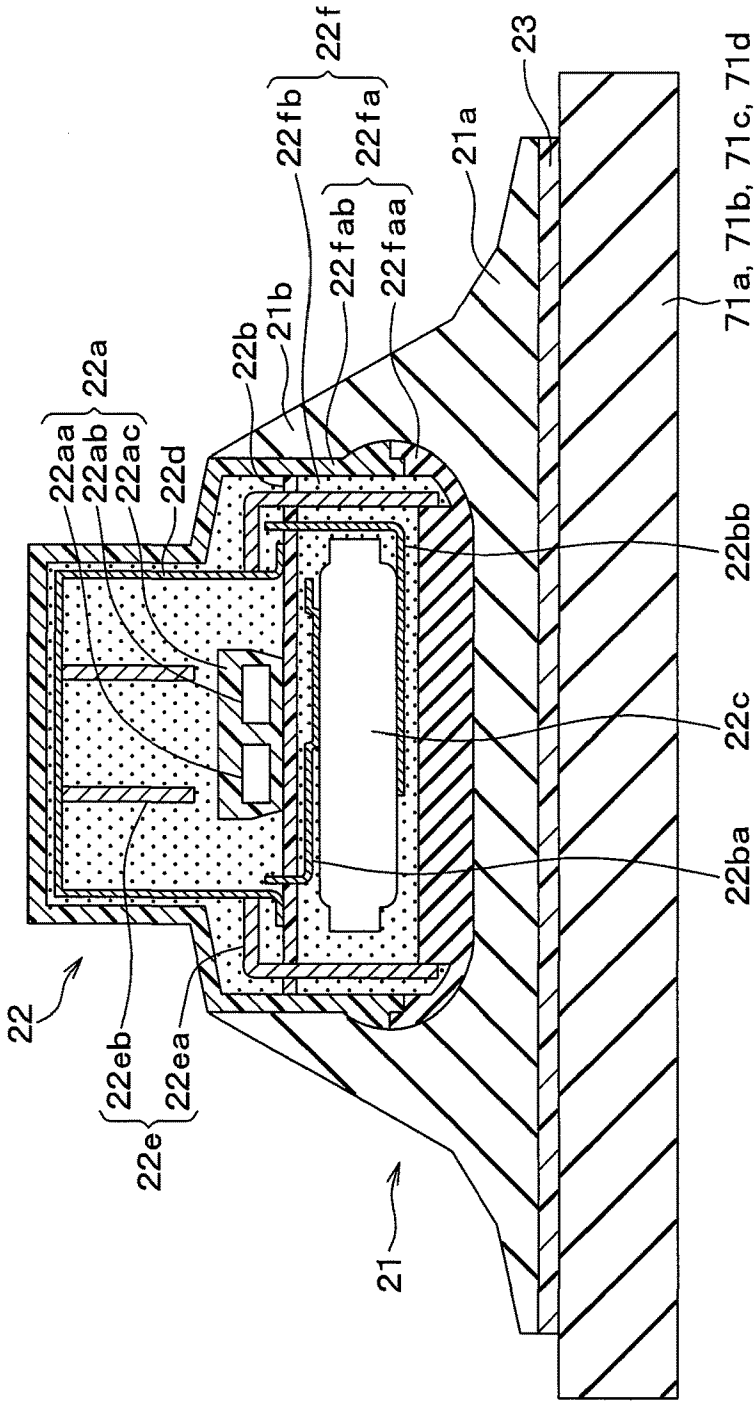
22
22a
22aa
22ab
22ac
22d
22e
22eb
22ea
22b
21b
22fb
22f
22fab
22fa
22faa
21a
23
71a, 71b, 71c, 71d
22bb
22c
22ba
21

FIG. 8

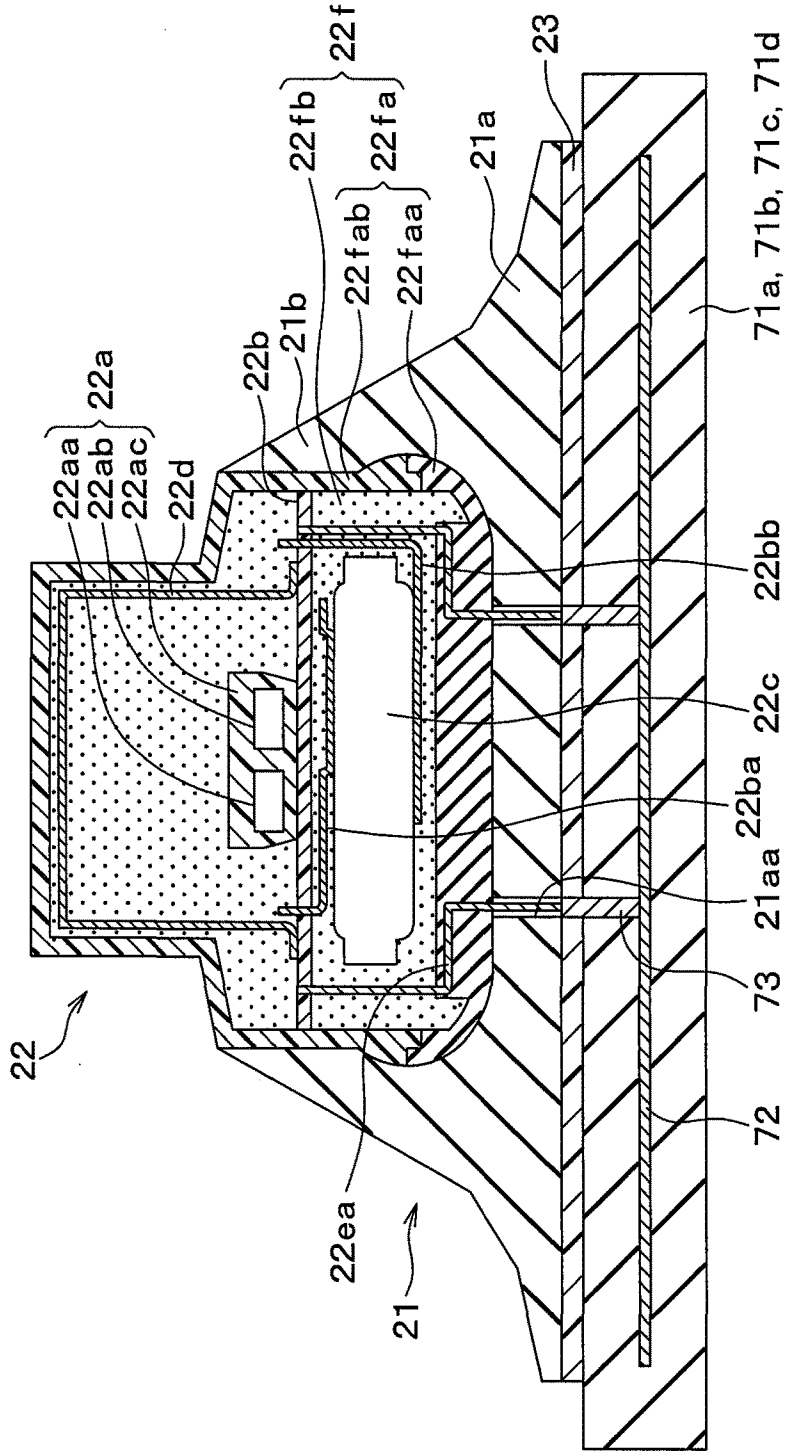
22
22aa
22ab
22ac
22a
22d
22b
21b
22fb
22f
22fab
22fa
22faa
21a
23
22ea
21
22bb
22c
22ba
21aa
73
72
71a, 71b, 71c, 71d

FIG. 9

TIRE-MOUNTED SENSOR

CROSS REFERENCE TO RELATED APPLICATIONS

[0001] The present application is a continuation application of International Patent Application No. PCT/JP2017/031839 filed on Sep. 4, 2017, which designated the United States and claims the benefit of priority from Japanese Patent Application No. 2016-174876 filed on Sep. 7, 2016. The entire disclosures of all of the above applications are incorporated herein by reference.

TECHNICAL FIELD

[0002] The present disclosure relates to a tire-mounted sensor disposed inside a tire.

BACKGROUND

[0003] There has been proposed a tire-mounted sensor which is attached to an inside of a tire, for example, to a back surface of a tread of the tire. The tire-mounted sensor is used to detect vibration applied to the tire. For example, detection result of the tire-mounted sensor is used to detect an abrasion of the tire and a road surface condition. For example, the tire-mounted sensor may be provided with an acceleration sensor to detect vibration transmitted to the tire.

SUMMARY

[0004] The present disclosure provides a tire-mounted sensor to be attached to an inner wall surface of a tire to detect vibration applied to the tire.

BRIEF DESCRIPTION OF DRAWINGS

[0005] FIG. **1** is a diagram showing a block configuration of a vehicle control device equipped with a tire-mounted sensor according to a first embodiment.

[0006] FIG. **2** is a cross-sectional view showing an example of mounting a tire-mounted sensor on a tire.

[0007] FIG. **3** is an enlarged cross-sectional view of the tire-mounted sensor.

[0008] FIG. **4** is an exploded view of the tire-mounted sensor shown in FIG. **3**.

[0009] FIG. **5** is a block diagram of the tire-mounted sensor.

[0010] FIG. **6** is a block diagram of a receiver.

[0011] FIG. **7** is an enlarged cross-sectional view of a tire-mounted sensor according to a second embodiment.

[0012] FIG. **8** is an enlarged cross-sectional view of a tire-mounted sensor according to a third embodiment.

[0013] FIG. **9** is an enlarged cross-sectional view of a tire-mounted sensor according to a fourth embodiment.

DETAILED DESCRIPTION

[0014] In a tire-mounted sensor attached inside of a tire, such as to a back surface of a tread of a tire, it is required an accommodation structure compatible with a structure in which an attenuation rate of vibration is small in order to detect vibration applied to a tire and a structure which can withstand a centrifugal force of the tire and an impact generated when the tire runs on a block or the like.

[0015] For example, a conventional module mounted in the tire is a tire pressure sensor and is not a tire-mounted sensor. In the tire pressure sensor, it is sufficient to detect a pressure. In such a case, vibration is attenuated with the use of a flexible accommodation structure, so that a resistance to the impact can be obtained. For example, each component of the tire pressure sensor is protected from impact with the use of an accommodation structure in which a housing is filled with a potting material having flexibility.

[0016] On the other hand, the tire-mounted sensor attached inside a tire needs to detect vibration. Therefore, in a structure simply having a small attenuation rate, vibration may not be sufficiently transmitted to an acceleration sensor and it may be difficult to accurately detect the vibration.

[0017] According to an aspect of the present disclosure, a tire-mounted sensor includes a sensor device including: a vibration detection element that is configured to detect vibration to be applied to a tire; a circuit board that has one surface and the other surface opposite to the one surface, and on which the vibration detection element is mounted; an antenna that is attached to the circuit board and transmits information on a detection result of the vibration detection element; and an accommodation structure that accommodates the vibration detection element, the circuit board, and the antenna and at least a part of which is made of a flexible material to attenuate the vibration applied to the tire. The tire-mounted sensor further includes a vibration transmission member that is configured to transmit the vibration applied to the tire to the vibration detection element.

[0018] In such a configuration, since the tire-mounted sensor is provided with the vibration transmission member, the vibration applied to the tire is transmitted to the vibration detection element through the vibration transmission member. For that reason, even if the vibration is attenuated by the accommodation structure in which at least a part of the accommodation structure is made of a flexible material in order to secure the impact resistance, the vibration can be transmitted to the vibration detection element. Therefore, a tire-mounted sensor having a structure in which the vibration detection can be accurately performed while the shock resistance can also be achieved can be provided.

[0019] Embodiments of the present disclosure will be described below with reference to the drawings. In the following embodiments, the same reference numerals are assigned to parts that are the same as or equivalent to each other to describe the same.

First Embodiment

[0020] A tire-mounted sensor according to the present embodiment will be described with reference to an example in which the tire-mounted sensor is applied to a vehicle control device. The vehicle control device is used to detect a state of a traveling road surface (hereinafter, simply referred to as a road surface condition), based on detection data sent from a tire-mounted sensor, which is provided to each wheel of a vehicle. Hereinafter, the tire-mounted sensor and the vehicle control device will be described with reference to FIGS. **1** to **6**.

[0021] As shown in FIG. **1**, a vehicle **1** includes a tire-mounted sensor **2**, a receiver **3**, and an electronic control device (hereinafter referred to as ECU) **5** for controlling the vehicle. The tire-mounted sensor **2**, the receiver **3**, and the ECU **5** configure a vehicle control device that performs a vehicle control based on a road surface condition.

[0022] The receiver **3** and the ECU **5** are fixed to a vehicle body **6** of the vehicle **1**, and are connected to each other through an in-vehicle local area network (LAN) such as by

a controller area network (CAN) communication or the like, so that the receiver **3** and the ECU **5** can communicate information with each other.

[0023] The tire-mounted sensor **2** is a tire side device provided on a tire. As shown in FIGS. **1** to **3**, the tire-mounted sensor **2** is attached to each of tires **71***a* to **71***d* of respective wheels **7***a* to **7***d* of the vehicle **1**. The tire-mounted sensor **2** acquires various information such as vibration data indicative of vibration applied to corresponding one of the tires **71***a* to **71***d* to which the tire-mounted sensor **2** is attached, and stores the various information in a frame and transmits the frame. In FIG. **1**, the tire-mounted sensors **2** of the respective wheels **7***a* to **7***d* are denoted by reference numerals **2***a* to **2***d*, but those tire-mounted sensors **2***a* to **2***d* have the same configuration. The receiver **3** receives the frames transmitted from the tire-mounted sensors **2**, and performs various processes, calculations, and the like based on the vibration data and the like stored in the frames to perform a road surface condition detection and the like. Details of each tire-mounted sensor **2** will be described with reference to FIGS. **2** to **5**.

[0024] As shown in FIGS. **2** to **4**, the tire-mounted sensor **2** has a rubber bracket **21**, which configures a sensor holding member, and a sensor device **22**.

[0025] As shown in FIGS. **2** and **3**, the rubber bracket **21** is a member for holding the sensor device **22** on an inner wall surface of the corresponding tire **71***a* to **71***d*, for example, on a back surface of a tread.

[0026] In the present embodiment, as shown in FIGS. **3** to **6**, the rubber bracket **21** has a bottom portion **21***a* and a holding portion **21***b*.

[0027] The bottom portion **21***a* is made of, for example, an elastically deformable rubber. In the present embodiment, the bottom portion **21***a* is formed of a circular member. One surface of the bottom portion **21***a* is a surface to be adhered to the inner wall surface of the corresponding tire **71***a* to **71***d* through an adhesive **23** or the like, and the holding portion **21***b* extends from the other surface of the bottom portion **21***a* opposite to the one surface to be adhered to the corresponding tire **71***a* to **71***d*. In the present embodiment, although the bottom portion **21***a* is formed of a circular member, the bottom portion **21***a* may have another shape such as a square, or may be a plate-like member.

[0028] The holding portion **21***b* is formed of, for example, a cylindrical member having a hollow portion into which the sensor device **22** is fitted. In the present embodiment, the holding portion **21***b* is formed of a cylindrical member having a circular shape in a top view. The holding portion **21***b* is also made of an elastically deformable rubber or the like, and is integral with the bottom portion **21***a*. As shown in FIG. **3** and FIG. **4**, an opening area of the holding portion **21***b* reduces at least at a part adjacent to the tip end opposite to the bottom portion **21***a*, so that the holding portion **21***b* holds the sensor device **22** not to be pulled out. More specifically, the hollow portion of the holding portion **21***b* has a shape corresponding to an outer shape of the sensor device **22**, which will be described later, and is a columnar hollow portion in the present embodiment. The sensor device **22** is disposed in the hollow portion, that is, in an inner space surrounded the bottom portion **21***a* and the holding portion **21***b*. However, the opening area of the hollow portion of the holding portion **21***b* is changed so that an opening area adjacent to the bottom portion **21***a* is larger than that adjacent to an inlet. The sensor device **22** is engaged with a step formed by a portion where the opening area is changed, and thus is restricted from exiting from the holding portion **21***b*.

[0029] As shown in FIGS. **3** to **5**, the sensor device **22** includes a sensor chip **22***a*, a circuit board **22***b* on which peripheral elements (not shown) and the like are mounted, a battery **22***c* corresponding to a power supply, an antenna **22***d*, vibration transmission members **22***e*, and an accommodation structure **22***f*.

[0030] The sensor chip **22***a* is formed by incorporating an acceleration sensor **22***aa* and a microcomputer **22***ab* in a molding resin **22***ac*. The sensor chip **22***a* is mounted on the circuit board **22***b* through a terminal (not shown) exposed from the molding resin **22***ac*.

[0031] The acceleration sensor **22***aa* corresponds to a vibration detection element for detecting the vibration applied to the corresponding tire **71***a* to **71***d*, and outputs a detection signal corresponding to an acceleration caused by the vibration applied to the corresponding tire **71***a* to **71***d*. In the present embodiment, the acceleration sensor **22***aa* is disposed to detect an acceleration in accordance with the ground state of the corresponding tire **71***a* to **71***d*, and to detect an acceleration in a circumferential direction of the corresponding tire **71***a* to **71***d*, that is, in a tangential direction, or an acceleration in a width direction of the corresponding tire **71***a* to **71***d*. More specifically, when a portion of the corresponding tire **71***a* to **71***d* at which the acceleration sensor **22***aa* is attached comes in contact with the traveling road surface and when the portion moves away from the traveling road surface again after coming in contact with the traveling road surface, the acceleration, in other words, the vibration changes greatly. During the road contact, the acceleration changes so as to vibrate in accordance with the road surface condition. The changed acceleration appears as a detection signal of the acceleration sensor **22***aa*.

[0032] In this example, as an example of the acceleration sensor **22***aa*, a one-axis sensor which detects only an acceleration in one direction, specifically, only the acceleration in one axial direction parallel to a tangential direction of the corresponding tire **71***a* to **71***d* shown in FIG. **2** will be described. However, as the acceleration sensor **22***aa*, a multi-axis sensor such as a two-axis sensor capable of detecting accelerations in two directions or a three-axis sensor capable of detecting accelerations in three directions can be used. When the acceleration sensor **22***aa* is the multi-axis sensor, for example, the acceleration in a radial direction of the corresponding tire **71***a* to **71***d* as the other two axes, that is, in a centrifugal direction, or the acceleration in a width direction of the corresponding tire **71***a* to **71***d* is detected.

[0033] In the present embodiment, the acceleration sensor **22***aa* is formed on a semiconductor chip, and a substrate plane of the semiconductor chip is a plane parallel to the tangential direction and the width direction of the corresponding tire **71***a* to **71***d*. Specifically, on the circuit board **22***b*, the semiconductor chip on which the acceleration sensor **22***aa* is formed is mounted so that a substrate planar direction of the semiconductor chip is parallel to a surface of the circuit board **22***b*. The front surface of the circuit board **22***b* is disposed in parallel with the back surface of the tread of the corresponding tire **71***a* to **71***d*, so that the substrate plane of the semiconductor chip on which the acceleration

sensor **22***aa* is formed is disposed in parallel with the tangential direction and the width direction of the corresponding tire **71***a* to **71***d*.

[0034] The microcomputer **22***ab* is a well-known one including a CPU, a ROM, a RAM, an I/O, and the like, and executes a predetermined process in accordance with a program stored in the ROM or the like. The ROM or the like stores individual ID information including identification information unique to each of the tire-mounted sensors **2** for identifying to which of the tires **71***a* to **71***d* the tire-mounted sensor **2** is attached, and identification information unique to the vehicle for identifying a host vehicle.

[0035] The microcomputer **22***ab* receives the detection signal of the acceleration sensor **22***aa*, subjects the received detection signal to signal processing, and processes the detection signal as necessary, and creates information on acceleration representing the detection result. Then, the microcomputer **22***ab* stores the information on the acceleration as vibration data in the frame together with the ID information of the tire-mounted sensor **2**. Upon creating a frame, the microcomputer **22***ab* transmits the created frame to a transmission unit such as an RF circuit provided in the microcomputer **22***ab* or as a peripheral device not shown. Then, the microcomputer **22***ab* transmits the frame from the antenna **22***d* to the receiver **3** through the transmission unit. In the present embodiment, the RF circuit is used as the transmission unit because a signal in an RF band is used, but a signal in a band other than the RF band may be used, and in that case, the transmission unit may be configured by a circuit corresponding to the band to be used.

[0036] The molding resin **22***ac* covers the acceleration sensor **22***aa* and the microcomputer **22***ab* to protect those components. The molding resin **22***ac* has a rectangular shape, and is disposed so that one side of the molding resin **22***ac* faces the circuit board **22***b*. A desired position of a circuit pattern provided on the circuit board **22***b* and a terminal exposed from the molding resin **22***ac* are electrically connected to each other.

[0037] The circuit board **22***b* is a board on which the sensor chip **22***a*, peripheral elements (not shown), and the like are mounted, and is configured by a printed circuit board or the like on which the circuit pattern is formed. The sensor chip **22***a* is mounted on the circuit board **22***b*, to thereby configure a circuit or the like for transmitting information on acceleration from the sensor device **22**. Specifically, the sensor chip **22***a* and the like are mounted on one surface of the circuit board **22***b*, and the battery **22***c* is disposed on the other surface opposite to the one surface. In addition, the antenna **22***d* is mounted at a position different from a position where the sensor chip **22***a* is disposed on the one surface of the circuit board **22***b*. At that position, for example, a pad (not shown) is provided, and the antenna **22***d* is soldered to the pad so as to be mounted on the circuit board **22***b*.

[0038] On the other surface of the circuit board **22***b*, a terminal **22***ba* electrically connected to one electrode of the battery **22***c*, for example, a positive electrode, and a terminal **22***bb* electrically connected to the other electrode, for example, a negative electrode, are provided. In the circuit board **22***b*, a penetration electrode (not shown) or the like is formed, and an electrical connection between the one surface and the other surface of the circuit board **22***b* can be performed through the penetration electrode.

[0039] The battery **22***c* forms a power supply, and is disposed adjacent to the other surface of the circuit board **22***b*. The battery **22***c* is disposed so that one electrode of the battery **22***c* is in contact with the terminal **22***ba* and the other electrode is in contact with the terminal **22***bb*, to thereby supply an electric power to each component provided in the circuit board **22***b*. In this example, a case where the battery **22***c* is used as the power supply is described. However, a power supply may be provided by a generator or a transponder system. Upon receiving the power supply from the battery **22***c*, the acceleration sensor **22***aa*, the microcomputer **22***ab*, the peripheral elements (not shown), and the like operate.

[0040] The antenna **22***d* serves to transmit the frame transmitted from the transmission unit to the outside. In the present embodiment, a loop antenna is used as the antenna **22***d*. The antenna **22***d* has an arch shape having a longitudinal direction in one direction when viewed in a direction normal to the circuit board **22***b*. One end and the other end of the antenna **22***d* are respectively connected to separate pads on the circuit board **22***b*. In the case where the antenna **22***d* is formed of a loop antenna, since the antenna **22***d* is erected upright with respect to the circuit board **22***b*, the antenna **22***d* protrudes from a surface of the circuit board **22***b* by a predetermined height. The antenna **22***d* may be configured by other types of antennas such as a monopole antenna, a patch antenna, or the like in addition to the loop antenna. In a case where the antenna **22***d* is formed of the loop antenna, a transmission radio wave is output radially toward an outer periphery of a loop formed by the antenna **22***d*. In a case where the antenna **22***d* is of a type different from the loop antenna, the transmission radio wave is output in accordance with the type. Although only one antenna **22***d* is shown in FIG. **3** and the like, a structure in which multiple antennas, for example, two antennas, are disposed in parallel may be employed.

[0041] Each of the vibration transmission members **22***e* serves to transmit the vibration applied to the corresponding tire **71***a* to **71***d* to the sensor chip **22***a*. As will be described later, the accommodation structure **22***f* is configured to have flexibility at least in part in order to secure the impact resistance. Specifically, the accommodation structure **22***f* has a structure in which a resin sealing portion **22***fb* made of a flexible potting material or the like is provided inside the housing **22***fa*. In the structure of that type, in the vibration transmission path in which the vibration applied to the corresponding tire **71***a* to **71***d* is transmitted to each component through the rubber bracket **21** and the resin sealing portion **22***fb*, the vibration is attenuated by the resin sealing portion **22***fb*, and the vibration transmitted to the sensor chip **22***a* is reduced. For that reason, the sensor device **22** is provided with the vibration transmission member **22***e* made of a different material from the accommodation structure **22***f*. Thus, even if the vibration is attenuated by the resin sealing portion **22***fb*, the vibration transmitted to the sensor chip **22***a* is made large.

[0042] In the present embodiment, the vibration transmission member **22***e* is configured to include the leg portion **22***ea* and the vibration application portion **22***eb*. The vibration transmission member **22***e* is made of a different material from each portion configuring the accommodation structure **22***f*, and has a hardness higher than that of the housing **22***fa*

or the resin sealing portion **22***fb*. For example, the vibration transmission member **22***e* is formed by press molding a strip-shaped metal plate.

[0043] The leg portion **22***ea* extends to the first housing **22***faa* of the housing **22***fa* as will be described later, and is vibrated by the vibration of the corresponding tire **71***a* to **71***d*. The leg portion **22***ea* transmits the vibration to the vibration application portion **22***eb*. In the present embodiment, the leg portion **22***ea* is in contact with the first housing **22***faa*, and the vibration of the corresponding tire **71***a* to **71***d* applied to the first housing **22***faa* is directly transmitted to the leg portion **22***ea*. However, it is not always necessary that the leg portion **22***ea* is in contact with the first housing **22***faa*. The leg portion **22***ea* may be separated from the first housing **22***faa* to such an extent that the vibration of the first housing **22***faa* is transmitted to the leg portion **22***ea*.

[0044] The vibration application portion **22***eb* is a portion of the vibration transmission member **22***e*, and extends toward the sensor chip **22***a* from a tip end of the leg portion **22***ea* opposite to the first housing **22***faa*. The vibration application portion **22***eb* applies the vibration transmitted to the leg portion **22***ea* to the sensor chip **22***a*. The vibration application portion **22***eb* may be in contact with the sensor chip **22***a*. Alternatively, if the vibration application portion **22***eb* is disposed adjacent to the sensor chip **22***a* even in a non-contact state, the vibration can be applied to the sensor chip **22***a*. In addition, in the present embodiment, two vibration transmission members **22***e* each having the leg portion **22***ea* and the vibration application portion **22***eb* are provided and disposed symmetrically about the sensor chip **22***a*. Alternatively, the vibration transmission members **22***e* may be integrated together by connecting the vibration application portions **22***eb* to each other.

[0045] In the present embodiment, the accommodation structure **22***f* is configured to include the housing **22***fa* and the resin sealing portion **22***fb*. The housing **22***fa* is formed of the hollow member that provides the accommodation chamber inside, and the housing **22***fa* is filled with the resin sealing portion **22***fb* to protect each component of the tire-mounted sensor **2**. In other words, the accommodation structure **22***f* of the present embodiment accommodates the respective components of the tire-mounted sensor **2** so as to be covered with the resin sealing portion **22***fb* while being covered with the housing **22***fa*.

[0046] Specifically, the housing **22***fa* configures an accommodation chamber that accommodates the circuit board **22***b* on which the antenna **22***d* is mounted in addition to the sensor chip **22***a* and the peripheral elements (not shown), and the battery **22***c* disposed on the other surface of the circuit board **22***b*. In the present embodiment, the housing **22***fa* is configured to include the first housing **22***faa* and the second housing **22***fab*.

[0047] The first housing **22***faa* is made of, for example, a circular resin or the like. The first housing **22***faa* is disposed adjacent to the rear surface of the tread of the corresponding tire **71***a* to **71***d* than the second housing **22***fab*, and is brought into contact with the bottom portion **21***a* of the rubber bracket **21**.

[0048] The second housing **22***fab* forms an accommodation chamber for accommodating each component of the sensor device **22** in cooperation with the first housing **22***faa*. The second housing **22***fab* is made of, for example, resin. In the present embodiment, the second housing **22***fab* has a circular top shape. Also, the second housing **22***fab* has a cup shape having an upper surface and a side surface, and is integrated with the first housing **22***faa* at an open end of the cup shape so as to configure the accommodation chamber. In addition, the dimension of an opening of the second housing **22***fab* is reduced on the upper surface side. The circuit board **22***b*, the battery **22***c*, and the like are disposed adjacent to the open end of the cup shape where the dimension of the opening dimension is large. Further, the antenna **22***d* is accommodated in the second housing **22***fab* adjacent to the upper surface where the dimension of the opening is small. The portion of the second housing **22***fab* adjacent to the upper surface having the small opening size may have a shape that matches the shape of the antenna **22***d*, because the portion of the second housing **22***fab* adjacent to the upper surface is required only to have a space for accommodating the antenna **22***d*. In the vibration transmission member **22***e* described above, the leg portion **22***ea* is disposed along the side surface of the second housing **22***fab*, but may be in contact with or separated from the side surface of the second housing **22***fab*.

[0049] The resin sealing portion **22***fb* is made of a potting material or the like filled in the housing **22***fa*, and is made of a resin material having flexibility. When an impact is applied from the corresponding tire **71***a* to **71***d*, the resin sealing portion **22***fb* attenuates the impact, to thereby protect each component of the sensor device **22** disposed in the housing **22***fa* from the impact. For that reason, the sensor device **22** has a shock resistance.

[0050] The tire-mounted sensor **2** configured as described above is provided by, for example, pushing out the hollow portion of the rubber bracket **21** by elastic deformation and disposing the sensor device **22** in a space surrounded by the rubber bracket **21**. Then, in this state, the adhesive **23** is applied to the back surface of the bottom portion **21***a* of the rubber bracket **21**, and the tire-mounted sensor **2** is attached to the inner wall surface of the corresponding tire **71***a* to **71***d*, for example, the back surface of the tread, through the adhesive **23**. In this manner, the tire-mounted sensor **2** is attached to the inside of each of the tires **71***a* to **71***d*.

[0051] The tire-mounted sensor **2** as described above is configured by the rubber bracket **21** and the sensor device **22** as separate members, but may be configured by a structure in which those members are integral with each other However, when the rubber bracket **21** and the sensor device **22** are separate members as in the present embodiment, the sensor device **22** can be removed from the rubber bracket **21** because the sensor device **22** is only held by the rubber bracket **21**. That is, the sensor device **22** can be removed from the rubber bracket **21** by expanding the hollow portion of the rubber bracket **21**.

[0052] In this manner, if the sensor device **22** is configured to be detachably attached to the rubber bracket **21**, only the rubber bracket **21** of the tire-mounted sensor **2** can be discarded and the sensor device **22** can be reused at the time of tire replacement or the like.

[0053] On the other hand, as shown in FIG. **6**, the receiver **3** includes an antenna **31**, an RF circuit **32**, a microcomputer **33**, and the like.

[0054] The antenna **31** is configured for receiving a frame transmitted from each of the tire-mounted sensors **2**. The antenna **31** is fixed to the vehicle body **6**.

[0055] The RF circuit **32** functions as a reception circuit for receiving the frame from each of the tire-mounted sensors **2** received by the antenna **31** and sending the

received frame to the microcomputer **33**. In this example, the RF circuit **32** is used as the receiving circuit. Further, the RF circuit **32** is the reception circuit corresponding to a frequency band to be used.

[0056] The microcomputer **33** is a well-known one including a CPU, a ROM, a RAM, an I/O, and the like, and executes a road surface condition detection process in accordance with a program stored in the ROM or the like. For example, the microcomputer **33** stores the ID information on the respective tire-mounted sensors **2** and the positions of the wheels **7***a* to **7***d* to which the respective tire-mounted sensors **2** are attached in association with each other. Then, the microcomputer **33** performs a road surface condition detection for the traveling road surfaces of the wheels **7***a* to **7***d* based on the ID information and the acceleration information stored in the frame sent from the tire-mounted sensors **2**.

[0057] Specifically, the microcomputer **33** detects the road surface condition based on the information on the acceleration stored in the frame, that is, the detection result of the acceleration. For example, a waveform of the acceleration takes a maximum value at a ground contact start time when a portion of the tread corresponding to a placement location of the tire-mounted sensor **2** starts to come in contact with the ground with the rotation of the tire **71***a* to **71***d*. Further, the waveform of the acceleration takes a minimum value at a ground contact end time when the portion of the tread corresponding to the placement location of the tire-mounted sensor **2** comes out of contact with the ground from the ground contact state. A period between the maximum value and the minimum value of the waveform of the acceleration is defined as a ground contact section, and a waveform of the acceleration in the ground contact section is a waveform corresponding to the road surface condition.

[0058] For example, the waveform of the acceleration is different between a case in which the vehicle travels on a high μ road surface relatively high in friction coefficient (hereinafter referred to as μ) as in an asphalt road and a case in which the vehicle travels on a low μ road surface having a relatively low road surface p as in a frozen road. In other words, when the vehicle is traveling on the low μ road surface due to the influence of the road surface μ, fine high frequency vibration due to a micro slip of the tire **71***a* to **71***d* is superimposed on the output voltage. For that reason, when the waveform of the acceleration in the ground contact section is subjected to a frequency analysis in the case of traveling on the high μ road surface and the case of traveling on the low μ road surface, the level of the high frequency component becomes different according to the road surface condition. Specifically, the level of the high frequency component when traveling on the low μ road becomes higher than that when traveling on the high μ road. For that reason, the level of the high frequency component of the waveform of the acceleration becomes an index representing the road surface condition, and the road surface p can be detected on the basis of the index.

[0059] Although the road surface μ has been described above, the waveform of the acceleration changes depending on the type of the road surface, such as whether the road surface is a dry road or a wet road. The type of the road surface can also be detected by performing the frequency analysis of the waveform of the acceleration or the like.

[0060] In this manner, the road surface condition such as the road surface p and whether the road surface is a dry road or a wet road can be detected based on the waveform of the acceleration.

[0061] The ECU **5** acquires information on the road surface condition, that is, information on the road surface μ, from the receiver **3**, and executes a vehicle control. As will be described later, the tire-mounted sensor **2** may be provided with a physical quantity sensor other than the acceleration sensor **22***aa*. In this instance, detection information on the physical quantity sensor, for example, information on a temperature in the case of a temperature sensor, may be transmitted to the ECU **5** through the receiver **3**, thereby being capable of executing the vehicle control. For example, the ECU **5** may be a brake ECU or the like. When the ECU **5** is a brake ECU, the brake ECU performs an antilock brake control, an anti-sideslip control, and the like with the use of the acquired road surface μ. For example, in the case of a frozen road or the like, the ECU **5** can perform a control such as a reduction in wheel slip by setting a braking force generated according to the braking operation amount by a driver to be lower than that in the case of an asphalt road or the like.

[0062] When the ECU **5** is capable of communicating with the outside of the vehicle with the use of a communication device (not shown), as with, for example, a navigation ECU or the like, the ECU **5** can transmit information on the road surface condition to a communication center by a road-to-vehicle communication. In that case, the communication center can map the information on the road surface condition and notify, for example, the following vehicles of the mapped information. Similarly, the ECU **5** can transmit the information on the road surface condition directly to the following vehicle by a vehicle-to-vehicle communication. This makes it possible for the following vehicle to grasp the road surface condition in advance and to leverage the grasped road surface condition for the vehicle control, thereby being capable of enhancing the safety of vehicle travel.

[0063] As described above, the vehicle control device including the tire-mounted sensor **2** of the present embodiment is configured. According to the tire-mounted sensor **2** configured as described above, the following effects can be achieved.

[0064] (1) The tire-mounted sensor **2** has the vibration transmission member **22***e* having the leg portion **22***ea* extending to a lower portion than the sensor chip **22***a* provided with the acceleration sensor **22***aa* or the like. The vibration transmission members **22***e* is configured to transmit the vibration applied to the corresponding tire **71***a* to **71***d* to the acceleration sensor **22***aa*. For that reason, even if the vibration is attenuated by the flexible resin sealing portion **22***fb* provided in the housing **22***fa* to secure the shock resistance, the vibration can be transmitted to the acceleration sensor **22***aa*. In this way, the tire-mounted sensor **2** is configured to have a structure capable of accurately detecting the vibration and having the shock resistance.

[0065] (2) In the case where the vibration transmission member **22***e* is made of a material having hardness higher than that of the housing **22***fa* or the resin sealing portion **22***fb*, for example, metal, the internal configuration of the sensor device **22** can be protected with the vibration transmission member **22***e* as a protective member. Therefore, even if the housing **22***fa* is made of a light material, the

internal configuration of the sensor device **22** can be protected. Since the tire-mounted sensor **2** is installed in the tire, it is desired to reduce the weight. For that reason, if the housing **22***fa* can be made of a light material by causing the vibration transmission member **22***e* to function as the protective member, the weight of the tire-mounted sensor **2** can be reduced, which is preferable.

[0066] (3) Since the vibration transmission member **22***e* is made of a material having a high hardness, for example, metal, the deformation of the vibration transmission member **22***e* can be reduced even if the temperature of the corresponding tire **71***a* to **71***d* becomes high as the vehicle **1** travels. For that reason, even if the temperature of the tire **71***a* to **71***d* is increased, the tire-mounted sensor **2** with little variation in vibration characteristics can be provided.

[0067] (4) In the case where the vibration transmission member **22***e* is made of metal, since heat is satisfactorily transferred, the temperature of the sensor chip **22***a* is also close to the temperature of the tread of the corresponding tire **71***a* to **71***d* through the vibration transmission member **22***e*. For that reason, when the microcomputer **22***ab* is provided with a shutdown function for high temperature protection for chip protection, the shutdown of the microcomputer **22***ab* can be performed with excellent response by providing the tire-mounted sensor **2** with a temperature sensor. In the same manner, in the case where algorithms such as various factors used for processing executed by the microcomputer **22***ab* and detection factors of the acceleration sensor **22***aa* are changed in accordance with the temperature, the various factors can be changed with higher response, so that the tire-mounted sensor **2** can have a higher performance.

Second Embodiment

[0068] A second embodiment will be described. Since the present embodiment is the same as the first embodiment except that the configuration of the vibration transmission member **22***e* is modified from the first embodiment, only portions different from the first embodiment will be described.

[0069] In the first embodiment, the vibration transmission members **22***e* are entirely disposed inside the accommodation structure **22***f*. In the present embodiment, on the other hand, the vibration transmission members **22***e* are partly disposed outside the accommodation structure **22***f*.

[0070] As shown in FIG. **7**, in the present embodiment, a leg portion **22***ea* of each vibration transmission member **22***e* is disposed in a rubber bracket **21**. For example, the leg portion **22***ea* is embedded in the rubber bracket **21** by insert molding or the like.

[0071] Specifically, the leg portions **22***ea* are disposed on both sides of a sensor device **22**. Each of the leg portions **22***ea* is disposed such that one end of the leg portion **22***ea* is located at a bottom portion **21***a* of the rubber bracket **21**, is erected in a holding portion **21***b*, and the other end of the leg portion **22***ea* is located at a position corresponding to a side surface of a second housing **22***fab* in a housing **22***fa*. The one end of the leg portion **22***ea* is extended in a plane direction of the bottom portion **21***a*, in other words, in a plane direction of the tread so as to be more susceptible to vibration of a corresponding tire **71***a* to **71***d* from a tread. The other end of the leg portion **22***ea* may be formed so as to be in contact with the side surface of the second housing **22***fab*, but if the other end reaches the vicinity of the second housing **22***fab*, the vibration can be transmitted to the accommodation structure **22***f*.

[0072] On the other hand, a vibration application portion **22***eb* is disposed in the accommodation structure **22***f*. In the present embodiment, the vibration application portion **22***eb* is formed of one member, and both ends of the vibration application portion **22***eb* are disposed at positions corresponding to the respective other ends of the two leg portions **22***ea*. The both ends of the vibration application portion **22***eb* may be in contact with the respective side surfaces of the second housing **22***fab* of the housing **22***fa*, but the vibration application portion **22***eb* may be separated from the second housing **22***fab* to such an extent that the vibration is transmitted.

[0073] The vibration application portion **22***eb* can be held at a predetermined position by being supported by the circuit board **22***b*, but may be attached to the side surface of the sensor chip **22***a* or the second housing **22***fab*.

[0074] In this manner, the leg portion **22***ea* and the vibration application portion **22***eb* constituting the vibration transmission member **22***e* may be formed of two members.

[0075] In the case where the leg portion **22***ea* is disposed in the holding portion **21***b* of the rubber bracket **21**, the leg portion **22***ea* can serve as an attachment. In addition, the rigidity of the holding portion **21***b* can be enhanced, and the fixation of the sensor device **22** can be further stabilized.

Third Embodiment

[0076] A third embodiment will be described. Also in the present embodiment, the configuration of the vibration transmission member **22***e* is modified from that of the first embodiment, and the other configurations are similar to those of the first embodiment. Therefore, only portions different from those of the first embodiment will be described.

[0077] In the present embodiment, the vibration transmission member **22***e* is entirely disposed in the accommodation structure, but the configurations of the leg portion **22***ea* and the vibration application portion **22***eb* are changed from those of the first embodiment.

[0078] As shown in FIG. **8**, in the present embodiment, the leg portion **22***ea* of the vibration transmission member **22***e* has the same configuration as that of the first embodiment, and the other end of the leg **22***ea* extends toward the antenna **22***d*. The other end of the leg portion **22***ea* may be in contact with the antenna **22***d*, but may be separated from the antenna **22***d* to such an extent that the vibration is transmitted.

[0079] In addition, the vibration application portion **22***eb* has one end connected to the antenna **22***d* and the other end extending toward the sensor chip **22***a* so as to be positioned in the vicinity of the sensor chip **22***a*.

[0080] In the configuration described above, the vibration from the leg portion **22***ea* can be transmitted to the antenna **22***d*, which is made of a metal having a high hardness or the like, and can be further transmitted to the vibration application portion **22***eb* through the antenna **22***d*. For that reason, the vibration can be applied from the vibration application portion **22***eb* to the sensor chip **22***a* through the antenna **22***d*.

[0081] As described above, the similar effects to those of the first embodiment can be achieved even if the vibration of the tire **71***a* to **71***d* is transmitted to the acceleration sensor

22*aa* in the sensor chip **22***a* through the antenna **22***d* having high hardness, of the essential circuit components of the sensor device **22**.

Fourth Embodiment

[0082] A fourth embodiment will be described. Also in the present embodiment, the configuration of the vibration transmission member **22***e* is modified from that of the first embodiment, and the other configurations are similar to those of the first embodiment. Therefore, only portions different from those of the first embodiment will be described.

[0083] In the present embodiment, a vibration transmission member **22***e* functions not only as vibration transmission of a corresponding tire **71***a* to **71***d* but also as a ground.

[0084] As shown in FIG. **9**, one end of the vibration transmission member **22***e* is connected to a circuit board **22***b*, and the other end of the vibration transmission member **22***e* is projected from a first housing **22***faa* so as to be received into a through hole **21***aa* provided in a bottom portion **21***a* of a rubber bracket **21**. The one end of the vibration transmission member **22***e* is electrically connected to a ground pattern of circuit patterns formed on the circuit board **22***b*.

[0085] A conductive liner **72** for grounding is embedded in a tread of the corresponding tire **71***a* to **71***d*, and grounding to the road can be achieved through the liner **72**. A terminal **73** connected to the liner **72** is buried in a back surface of the tread of the corresponding tire **71***a* to **71***d*, and the rubber bracket **21** is attached to a back surface of the tread so that the through hole **21***aa* of the bottom portion **21***a* and the terminal **73** coincide with each other.

[0086] For that reason, when the sensor device **22** is attached to the rubber bracket **21**, the vibration transmission member **22***e* projecting from the first housing **22***faa* is inserted into the through hole **21***aa* and connected to the terminal **73** so as to be electrically connected to the liner **72**.

[0087] According to the configuration described above, the vibration from the vibration transmission member **22***e* is transmitted to the circuit board **22***b*, so that the vibration is transmitted to the acceleration sensor **22***aa* provided in the sensor chip **22***a*. As a result, the similar effects to those of the first embodiment can be achieved.

[0088] Further, since the ground pattern of the circuit board **22***b* can be electrically connected to the liner **72** through the vibration transmission member **22***e*, the sensor device **22** can be grounded.

[0089] While the present disclosure has been described with reference to embodiments thereof, it is to be understood that the disclosure is not limited to the embodiments and constructions. The present disclosure is intended to cover various modification and equivalent arrangements. In addition, while the various combinations and configurations, other combinations and configurations, including more, less or only a single element, are also within the spirit and scope of the present disclosure.

[0090] For example, in the embodiment described above, the case where the accommodation structure **22***f* having a structure in which the resin sealing portion **22***fb* is provided in the housing **22***fa* has been described. However, if the resin sealing portion **22***fb* is made of a material capable of maintaining the external shape, the accommodation structure **22***f* having a structure in which each component including all or part of the vibration transmission member **22***e* is merely covered with the resin sealing portion **22***fb* can be formed, and the housing **22***fa* can be eliminated. Even in that case, since the resin sealing portion **22***fb* is made of a flexible material, for example, the tire-mounted sensor **2** capable of accurately detecting the vibration while having the impact resistance can be provided.

[0091] Further, in the embodiments described above, the case in which the acceleration sensor **22***aa* is used as the vibration detection element and the vibration transmitted to the tires **71***a* to **71***d* is detected as the acceleration has been described. Alternatively, the vibration detection may be performed by other vibration detection elements. In addition, although the example of detecting the road surface condition based on the detection result of the acceleration sensor **22***aa* has been described, use of the tire-mounted sensor **2** is not limited to detect the road surface condition and the tire-mounted sensor **2** may be used for any other purposes. For example, the tire-mounted sensor **2** can be employed in order to detect the tire condition, more specifically, to detect a groove depth of the tire, since the vibration applied to the tire changes in accordance with the groove depth of the tire. The acceleration detected by the acceleration sensor **22***aa* can also be used for detecting a tire pressure. In addition to the acceleration sensor **22***aa*, another physical quantity sensor, for example, a temperature sensor or a pressure sensor, may be mounted on the circuit board **22***b*, and another physical quantity sensor may be accommodated in the accommodation structure **22***f*.

[0092] The embodiments described above are not independent of each other, and can be appropriately combined with each other. For example, in the structures of the first and third embodiments, the circuit board **22***b* may be grounded through the vibration transmission member **22***e* as in the fourth embodiment.

1. A tire-mounted sensor to be attached to an inner wall surface of a tire, the tire-mounted sensor comprising:

a sensor device including

a vibration detection element that is configured to detect vibration applied to the tire,

a circuit board that has one surface and the other surface opposite to the one surface, and on which the vibration detection element is mounted,

an antenna that is attached to the circuit board and is configured to transmit information on a detection result of the vibration detection element, and

an accommodation structure that accommodates the vibration detection element, the circuit board, and the antenna, and at least a part of the accommodation structure being made of a flexible material to attenuate the vibration applied to the tire; and

a vibration transmission member that is configured to transmit the vibration applied to the tire to the vibration detection element.

2. The tire-mounted sensor according to claim **1**, wherein

the vibration transmission member has a leg portion that extends from a position adjacent to the circuit board to a position adjacent to the inner wall surface of the tire, and

the vibration transmission member is configured to transmit the vibration applied to the tire through the leg portion.

3. The tire-mounted sensor according to claim **2**, further comprising

a rubber bracket that includes a holding portion providing a hollow portion into which the sensor device is fitted and a bottom portion that is to be attached to the inner wall surface of the tire.

4. The tire-mounted sensor according to claim **2**, wherein

the accommodation structure includes a resin sealing portion that covers the vibration detection element, the circuit board and the antenna, and is made of the flexible material, and

the leg portion is disposed in the resin sealing portion, and is configured to receive the vibration applied to the tire through the resin sealing portion.

5. The tire-mounted sensor according to claim **4**, wherein

the accommodation structure includes a housing having a first housing that is to be disposed adjacent to the inner wall surface of the tire, and a second housing that provides an accommodation chamber to accommodate the vibration detection element, the circuit board, and the antenna together with the first housing, and the resin sealing portion is disposed in the housing, and

the leg portion is disposed in the accommodation structure to extend to the first housing, and is configured to receive the vibration applied to the tire through the first housing and the resin sealing portion.

6. The tire-mounted sensor according to claim **5**, wherein

the vibration transmission member includes a vibration application portion that is disposed in the accommodation structure and is configured to apply the vibration applied to the tire and transmitted from the leg portion to the vibration detection element, and

the leg portion and the vibration application portion are integral with each other.

7. The tire-mounted sensor according to claim **3**, wherein

the accommodation structure includes a housing having a first housing that is to be disposed adjacent to the inner wall surface of the tire, and a second housing that provides an accommodation chamber to accommodate the vibration detection element, the circuit board and the antenna together with the first housing, and the resin sealing portion is disposed in the housing, and

the leg portion is provided in the rubber bracket in such a manner that one end of the leg portion is located at the bottom portion of the rubber bracket and erects in the holding portion, and the other end of the leg portion is located adjacent to a side surface of the second housing.

8. The tire-mounted sensor according to claim **7**, wherein

the vibration transmission member includes a vibration application portion that is disposed within the accommodation structure and is configured to apply the vibration applied to the tire and transmitted from the leg portion to the vibration detection element, and

the vibration application portion is configured to receive the vibration from the leg portion through the side surface of the second housing.

9. The tire-mounted sensor according to claim **2**, wherein

the antenna provides a part of the vibration transmission member.

10. The tire-mounted sensor according to claim **9**, wherein

the vibration transmission member includes a vibration application portion that is disposed within the accommodation structure and is configured to apply the vibration applied to the tire and transmitted from the leg portion to the vibration detection element, and

the vibration application portion is coupled to the antenna and disposed to extend toward the vibration detection element.

11. The tire-mounted sensor according to claim **1**, wherein

in the vibration application portion, the leg portion is configured to be electrically connected to a ground liner provided in the tire and is electrically connected to a ground pattern of the circuit board.

* * * * *