IN THE UNITED STATES DISTRICT COURT
FOR THE DISTRICT OF DELAWARE

CEREBRUM SENSOR TECHNOLOGIES, INC. AND TIRE STICKERS LLC,	)	
Plaintiffs,	)	
v.	)	C.A. No. 24-245-JLH-SRF
REVVO TECHNOLOGIES, INC.,	)	
Defendant.	)	

DEFENDANT REVVO TECHNOLOGIES, INC.'S
RESPONSIVE CLAIM CONSTRUCTION BRIEF

OF COUNSEL:
Karen Boyd
Karen.Boyd@ThompsonHine.com
Bethany Bengfort
Bethany.Bengfort@ThompsonHine.com
Camilla M. Bykhovsky
Camilla.Bykhovsky@ThompsonHine.com
Victoria A. Moffa
Victoria.Moffa@ThompsonHine.com
THOMPSON HINE LLP
155 Bovet Road, Suite 600
San Mateo, California 94402
(650) 521-5930

Kelly E. Farnan (#4395)
Sara M. Metzler (#6509)
Richards, Layton & Finger, P.A
One Rodney Square
920 North King Street
Wilmington, DE 19801
(302) 651-7700
farnan@rlf.com
metzler@rlf.com

Attorneys for Defendant
Revvo Technologies, Inc.

Dated: January 14, 2026

TABLE OF CONTENTS

Page

I. INTRODUCTION 1

II. BACKGROUND OF THE ASSERTED PATENTS 2

A. The ’741 and ’027 Patents (“Tire Sticker” Patents) 2

B. The ’421 Patent 3

III. DISPUTED CLAIMS 5

A. “layer” 5

B. “(an) outer layer” 9

C. “(an) intermediate layer” 12

D. “vulcanized” / “vulcanized to[gether]” 12

E. “barrier material composition” / “material composition that acts as a barrier” 15

F. “cavity” 17

G. “direct contact” 17

H. “before attachment with the vulcanized rubber article” / “before attachment to the vulcanized rubber article” 18

I. “(a) housing” 19

J. “internal cavity” 27

K. “enclosed/enclosed within the housing” 28

L. “unfilled open space” / “open space” 28

M. “surface feature[s]” 30

TABLE OF AUTHORITIES

Cases **Page(s)**

Acera Surgical v. Nanofiber,
No. 20-980-CFC-JLH, 2022 U.S. Dist. LEXIS 186276 (D. Del. Oct. 12, 2022) 6

Akeva L.L.C. v. Nike, Inc.,
817 F. App'x 1005 (Fed. Cir. 2020) 24

Bridgelux, Inc. v. Cree, Inc.,
No. c-06-6495-PJH, 2008 U.S. Dist. LEXIS 110989 (N.D. Cal. Aug. 15, 2008) 6

Changzhou Kaidi Elec. Co., Ltd. v. Okin Am., Inc.,
No. CCB-13-1798, 2014 U.S. Dist. LEXIS 64910 (D. Md. May 12, 2014) 22, 28

Halliburton Energy Servs., Inc. v. M-I LLC,
514 F.3d 1244 (Fed. Cir. 2008) 19

Indivior Inc. v. Dr. Reddy's Lab'ys, S.A.,
752 F. App'x 1024 (Fed. Cir. 2018) 24

IPXL Holdings, L.L.C. v. Amazon.com, Inc.,
430 F.3d 1377 (Fed. Cir. 2005) 18

Liberty Ammunition, Inc. v. United States,
835 F.3d 1388 (Fed. Cir. 2016) 9

MasterMine Software, Inc. v. Microsoft Corp.,
874 F.3d 1307 (Fed. Cir. 2017) 19

Nautilus, Inc. v. Biosig Instruments, Inc.,
134 S. Ct. 2120 (2014) 27

PSN Ill., LLC v. Ivoclar Vivadent, Inc.,
525 F.3d 1159 (Fed. Cir. 2008) 27

SciMed Life Sys., Inc. v. Advanced Cardiovascular Sys., Inc.,
242 F.3d 1337 (Fed. Cir. 2001) 24, 27

Sud-Chemie, Inc. v. Multisorb Techs., Inc.,
No. 3:03-cv-29-S, 2006 U.S. Dist. LEXIS 77235 (W.D.K.Y. Oct. 20, 2006) 22

Synchronoss Techs., Inc. v. Dropbox, Inc.,
987 F.3d 1358 (Fed. Cir. 2021) 11

Trustees of Boston University v. Everlight Electronics Co., Ltd.,
23 F. Supp. 3d 50 (D. Mass. 2014) 6

Trustees of Columbia Univ. v. Symantec Corp.,
811 F.3d 1359 (Fed. Cir. 2016) 11

UltimatePointer, L.L.C. v. Nintendo Co.,
816 F.3d 816 (Fed. Cir. 2016) 18

I. INTRODUCTION

The patents in this case relate to two technologies: a sticker that can stick to tires (here, asserted against a rubber mount that is stuck to the inside of a tire to hold a tire sensor), and a tire sensor mount. Plaintiffs originally applied for these patents in 2018 and 2019. By this time, rubber tire patches that could stick to tires had been around for decades, as had tire sensors. In fact, the Transportation Recall Enhancement, Accountability, and Documentation (TREAD) Act was signed into law in 2000, requiring new cars to have Tire Pressure Monitoring Systems (TPMS) by 2007. The TREAD Act was in response to the tragic Firestone tire failures leading to rollovers of Ford SUVs and light trucks that killed hundreds of Americans in the 1990s.

It was against this backdrop of decades of TPMS research and products on the market that Plaintiffs' patents were prosecuted. And in this crowded field, these patents had to carve out what had come before. In both the specifications and the prosecution histories, Plaintiffs described their narrow inventions and disclaimed that which preceded them.[1]

For U.S. Patent No. 10,137,741 ("'741 patent") and U.S. Patent No. 11,124,027 ("'027 patent") (collectively, the "Tire Sticker" patents), Plaintiffs claimed to have invented tire stickers that use specific types of "barrier" materials or "vulcanized" portions of the stickers in a way that had not been done in the prior art. Having successfully obtained their patents based on these narrowing limitations, Plaintiffs now seek constructions of those terms that contradict their prior representations and render the claim terms essentially meaningless. For U.S. Patent No. 11,835,421 ("'421 patent"), Plaintiffs attempt to recapture a specific type of tire sensor that was

[1] In fact, Defendant Revvo Technologies, Inc. ("Revvo") has sold the accused products since before the applications of the patents-in-suit. This does not directly affect claim construction and will be raised in motion practice at the appropriate time.

expressly disclaimed during prosecution: a tire sensor that uses filling material (also called "potting") to fix the sensor in place.

The Court should reject Plaintiffs' litigation-inspired attempts to distort the claims beyond what is reasonably permitted by the patents and prosecution histories. Revvo respectfully requests that the Court adopt its proposed claim constructions.

II. BACKGROUND OF THE ASSERTED PATENTS

A. The '741 and '027 Patents ("Tire Sticker" Patents)

As reflected in the very name of the patent owner—"Tire Stickers"—the Tire Sticker patents are directed to stickers that you can put on tires. In the words of the patents, they are particular types of "display assemblies," for example, "decals," that have "the purpose of adding features of aesthetic appearance, branding or the like" to a "vulcanized article" like a tire. '741 patent at 1:15-25.[2] Figure 1 shows a "display assembly" of a "Tire Stickers" decal.

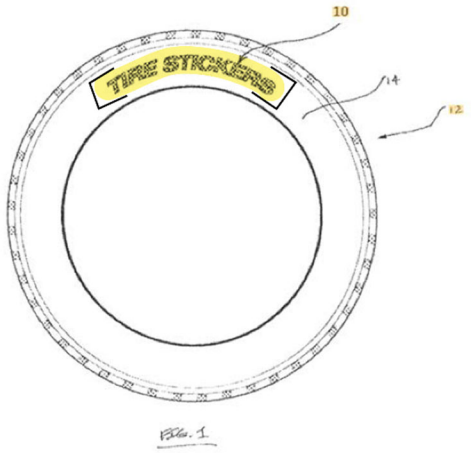

The Tire Sticker patents explain that prior art decals were "constructed in a manner that [wa]s either intended for temporary rather than permanent service," and/or were applied at the

[2] All citations to the '741 patent specification also appear in the '027 patent specification.

"point of manufacture" of the tire. '741 patent at 1:25-29.[3] Thus, the inventors sought to create a display assembly that: (1) could be applied "subsequent to the manufacture" of the tire, *id.* at 2:35-39; and/or (2) could be "applied for a long duration . . . without sacrificing the integrity and/or aesthetic appearance of the display assembly," *id.* at 2:39-43.

For the '741 patent, the solution was to "vulcanize" the aesthetic "display layer" of the sticker with an "intermediate layer" made from a different material "before attachment with" the tire, forming a "permanent bond" between the display layer and the intermediate layer. *See, e.g.*, '741 patent at cl. 1; *see also id.* at 2:58-60, 6:57-60. This "vulcanization" process—which was separate from the vulcanization of the tire itself—would strengthen the display assembly, making it more durable, while at the same time allowing the display assembly to be applied to the tire subsequent to its manufacture. *See id.*; *see also* Declaration of Tim Donley in Support of Revvo's Responsive Claim Construction Brief ("Donley Decl."), dated Jan. 14, 2026, ¶ 43. For the related '027 patent, the claimed solution was the use of a "barrier material composition" between the display layer and adhesive layer of the display assembly that "minimize[s] or prevent[s] the migration of any unwanted constituents of the adhesive layer **26** and/or [the tire] [that] may otherwise operate to damage or degrade the design image." '027 patent at cl. 1, *id.* at 6:33-37; *see also* Donley Decl. ¶ 46.

B. The '421 Patent

The '421 patent—filed in October 2019—is directed to a specific Tire Pressure Monitoring System (TPMS); U.S. law has required TPMS on new cars since 2007. '421 patent at 1:14-21, 2:52-54. The specification of the '421 patent explains that, in order to overcome "the evident shortcomings of traditional" sensor assemblies that affix to the "wheel, valve stem, or

[3] Unless otherwise indicated, all citations to the '741 patent also appear in the '027 patent.

valve cap," some prior art sensor assemblies place the electronic sensors "within a flexible 'housing' affixed to the inner tire surface." *Id.* at 3:39-44. According to the '421 patent, these prior art sensor assemblies "remain[ed] impractical or inadequate" for a number of reasons, including "[e]xcessive sizing and weight" that caused "tire performance and sensor durability issues." *Id.* at 3:45-48. For example, "a common technique" known in the art "to assist in fixturing" the sensor within the housing was to "fill the internal cavity with a coating material such as a neutral silicone or the like for purposes of retaining placement position" of the sensor, necessarily increasing the weight of the assembly. *Id.* at 13:56-60; *see also* Declaration of Dr. Isaac Davenport in Support of Revvo's Responsive Claim Construction Brief ("Davenport Decl."), dated Jan. 14, 2026, ¶¶ 15-16.

The solution offered by the '421 patent is a specific type of sensor assembly that is "configured in a manner to fixedly retain and house the electrical sensor device . . . ***without the need for filing agents and materials***."[4] '421 patent at 12:41-45. In particular, the "internal cavity" and "surface features" of the housing are constructed "to mechanically fix and retain the placement position of the electrical sensor device." *Id.* at 13:52-56. Because "structural support of the electrical sensor device" is "provide[d] by the mechanical fixturing," the claimed invention "***do[es] not use or require the use of any [] coating or filling agents or materials for any fixturing of the electrical sensor device***." *Id.* at 13:60-66. The lack of filling agents not only decreases the weight of the sensor, but also allows for an "opening" that may be "configured and positioned to enable air outside of the housing to reach the internal cavity" and the sensor within the cavity, thus permitting the sensor assembly to measure air pressure inside the tire. *Id.* at 14:12-28; Davenport Decl. ¶ 48. As the applicant stated during prosecution, "any

[4] Unless indicated otherwise, all emphasis in Revvo's brief has been added.

such opening would ***serve no purpose*** and ***be inconsistent*** as used with a resin-filled housing." '421 patent File Hist.: Response to Non-Final Office Action (May 23, 2023), 15.

III. DISPUTED CLAIMS

A. "layer"

The Court should adopt Revvo's proposed construction for "layer," which is consistent with the plain and ordinary meaning of the term "layer" as well as the intrinsic and extrinsic evidence. Plaintiffs' proposed construction is essentially meaningless and does nothing to resolve the dispute between the parties over the types of structures that can constitute a "layer." The Court should reject Plaintiffs' invitation to inject ambiguity into an easily understood term and construe it in accordance with its plain meaning and its use in the patent.

The Tire Sticker patents describe that the claimed "display assemblies," *e.g*. tire stickers, "comprise a composite of ***different material layers*** specially engineered to provide a desired display indicia in a manner that will last a long time" on the tire. '741 patent at 1:64-67. In particular, the display assemblies "comprise one or more display layers of elastomeric material configured to provide a desired display indicia, an intermediate layer formed from an elastomeric material ***different from that of the one or more display layers***, and an adhesive layer . . . ." *Id.* at 2:01-05. Figure 2, for example, depicts a display assembly with "a display layer **22**, an intermediate or barrier layer **24**, and an adhesive layer **26**." *Id.* at 5:53-57.

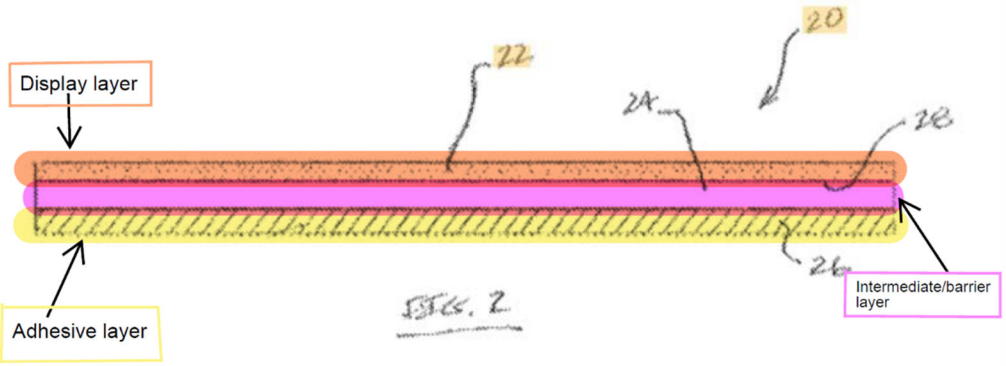

Consistent with this description, the term "layer" is generally understood in the art to mean a "single" or defined "thickness" of material that is "separate and distinct" from other layers and has a sheetlike structure. Donley Decl. ¶ 49. Multiple courts have found these characteristics reflect the "plain and ordinary meaning" of the word "layer" as well as standard dictionary definitions of the term. *See, e.g.*, *Acera Surgical v. Nanofiber*, No. 20-980-CFC-JLH, 2022 U.S. Dist. LEXIS 186276, at *3 (D. Del. Oct. 12, 2022) (construing the term "layer" as a "distinct and separately deposited thickness of material"), *adopted by*, 2023 U.S. Dist. LEXIS 28833 (D. Del. Feb. 21, 2023); *Bridgelux, Inc. v. Cree, Inc.*, No. c-06-6495-PJH, 2008 U.S. Dist. LEXIS 110989, at *18-19 (N.D. Cal. Aug. 15, 2008) (explaining that the "ordinary English meaning" of "layer" is "a defined thickness that is part of a material"); *Trustees of Boston University v. Everlight Electronics Co., Ltd.*, 23 F. Supp. 3d 50, 67 (D. Mass. 2014) (explaining that "the customary and ordinary meaning of 'layer' is a thickness of material with particular physical and/or chemical characteristics"); *see also* Donley Decl. ¶ 65 (discussing dictionary definitions that define layer as a "single thickness," "a thin sheet of a substance," and a "sheetlike expanse").

There is nothing in the specification of the Tire Sticker patents that suggests a departure from the ordinary usage of the term "layer." In fact, the specification consistently describes each

"layer" as having a single or defined thickness and as "separate and distinct" from other layers. *See, e.g.,* '741 patent at 6:05-08, 9:39-46; *see also* Donley Decl. ¶¶ 51-53, 61. The specification also explains that the required function of a particular layer will dictate the exact thickness that is required, further supporting the understanding that a layer must have a specific thickness. '741 patent at 6:46-56, 7:34-44, 9:21-32, 11:13-16; *see also* Donley Decl. ¶¶ 54-57 (explaining that variable thickness within a layer would negatively impact the functions of the layers described in the patents). And every embodiment depicts layers that have a "sheetlike structure" as would be understand by a POSA. *See* '741 patent at Figs. 2-7; *see also* Donley Decl. ¶ 64.

Plaintiffs' arguments to the contrary are unavailing. Plaintiffs first argue that Revvo's construction is incorrect because it suggests that "each layer must have the same thickness." Op. Br. at 6. Not so. The requirement that an individual layer have a single, defined thickness in no way indicates that *different* layers cannot have different thicknesses. Plaintiffs' argument misunderstands Revvo's proposed construction.

Plaintiffs next argue that the specification discloses individual layers that have varying thicknesses. Op. Br. at 6. This is also incorrect. Plaintiffs' first example of a "display assembly" that is composed of letters—such as the "Tire Stickers" example in Figure 1—describes only that an end user can use multiple separate *display assemblies* (each a single "letter" composed of its own individual layers) to form words. '741 patent at 4:36-48 (explaining that "the display assembly **10** can be configured in the shape of a letter and a number of the display assemblies can be used alone or in conjunction with other display assemblies . . . to provide a desired word"). And even if this passage did describe a single "layer" composed of letters, it wouldn't matter, because having a "single thickness" does not mean that a layer cannot have holes or gaps

in it. A layer of cheese is still a layer of cheese regardless of whether it is cheddar or Swiss. The presence of holes or gaps does not impact the thickness of the layer itself, which remains consistent across the layer. *See, e.g.*, '741 patent at Fig. 7 (showing layers with a consistent thickness around the cavity **78**); *see also* Donley Decl. ¶ 58. Plaintiffs' second example describing that the "exact thickness" of the intermediate adhesive layer may "vary" depending on certain factors shows only that *different* layers may have different thicknesses depending on the composition and function of that particular layer, not that a *single* layer may have varying thicknesses. '741 patent at 6:49-52; *see also* Donley Decl. ¶ 51.

Plaintiffs also argue that the specification does not support a requirement that the claimed layers be composed of "separate and distinct material" because it describes that different layers '"may be configured as a composite having properties of another layer'" and that these '"composite compositions may be used in such multilayer assemblies to reduce the total number of separate and distinct layers.'" Op. Br. at 7 (quoting '741 patent at 9:39-57). For example, the display layer or adhesive layer "may be configured so as to include a barrier composition" that has the "barrier properties" of the barrier layer. '741 patent at 7:53-58. All these passages describe, however, is that a single layer may be formed of a "composite" material that has multiple different properties—for example, both an adhesion property and a barrier property—so that separate layers are not required for the display assembly to have both properties. *Id.* at 7:53-58, 9:39-57; *see also* Donley Decl. ¶ 63. The layer itself is still composed of the "composite" material, which is a "separate and distinct material" from the other layers. '741 patent at 9:39-57.

Plaintiffs finally argue that the specification's description of discontinuous layers (such as layers with cavities or holes) contradicts Revvo's construction of "layer" as having a "sheetlike"

structure, pointing to the specification's description of a "stencil" that is used to ensure proper spacing of different letters on the tire. Op. Br. at 7 (citing '741 patent at 13:42-29). The example that Plaintiffs cite, however, describes each letter as a separate "display assembly," meaning it is each individual letter that is composed of layers, not the entire arrangement of letters. *See* '741 patent at 13:45-51 ("[I]n the case where *a series of display assemblies* are to be applied to a sidewall surface of a tire to provide a desired string of letters . . . a stencil **98** or template may be used to ensure the that the *display assemblies* are positioned at the proper spacing . . . ."). Every example of an actual "layer" in the specification—even those that have holes, cavities, or gaps—depicts the overall composition of the layer as a "sheetlike" structure. *See, e.g.*, '741 patent at Fig. 7. Again, this is consistent with the ordinary usage of the term "layer."

In contrast with Revvo's construction, Plaintiffs' construction fails to provide any workable definition for the term "layer." As Revvo's expert Mr. Donley explains, Plaintiffs' construction "lacks any of the characteristics of what an ordinary artisan would understand to be a 'layer,' and is essentially meaningless in that it would include any number of materials, any type of material, in any shape, and in any form, including many structures that no ordinary artisan would ever consider to be a 'layer.'" Donley Decl. ¶ 66. For example, Plaintiffs' construction would include a swinging ball in a pendulum—something no POSA would consider a "layer"—because the ball would be composed of "at least one material disposed over" the base of the pendulum. *Id.* ¶ 67. In other words, Plaintiffs' construction is no construction at all. The Court should therefore adopt Revvo's construction, which provides a meaningful definition for the term that is consistent with both its ordinary meaning and the patents.

B. "(an) outer layer"

The Court should hold that "outer layer" is indefinite as a matter of law. *See Liberty Ammunition, Inc. v. United States*, 835 F.3d 1388, 1397-98 (Fed. Cir. 2016) (explaining that a

claim term is indefinite if there is not a "sufficient objective boundary around the term" to inform its meaning to a POSA). Plaintiffs' construction—"at least one layer that is outermost"—provides no objective boundaries because it includes an indeterminate number of layers that are *not* the outermost layer. And the claims themselves create confusion as to what constitutes an "outer layer" because they describe the "outer layer" as potentially comprising multiple layers, or as comprising a single layer that is *not* the outermost layer. Given these inconsistencies, a POSA would have no reasonable way of determining the scope of the term "outer layer."

The term "outer layer"—as opposed to "outermost layer" or "outer surface"—is not used in the specification. Instead, the term was added in a preliminary amendment, primarily to replace the phrase "one or more display layers." '027 patent File Hist.: Preliminary Amend. (Feb. 19, 2019), 2. For example, the original claim 1 referred to a "display assembly" with "one or more display layers," while the amended claim 1 recited "an assembly" with an "outer layer." *Id.*

The modification of "one or more display layers" to a single "outer layer" created multiple inconsistencies in the dependent claims. For example, original claim 2 referred to "the display assembly as recited in claim 1 comprising a first display layer and a second display layer disposed beneath the first layer." *Id.* This makes sense, because an "assembly" can be composed of multiple layers. The amended (and issued) claim 2, however, recites that "the outer layer comprises a first layer and a second layer disposed beneath the first layer." *Id.*; *see also* '027 patent at cl. 2. This does not make sense, because this would mean that "the outer layer": (1) contains multiple layers; and (2) contains at least one layer that is not the "outermost" layer.

As another example, original claim 6 referred to "the display assembly as recited in claim 1 further comprising a protective layer disposed over the one or more display layers and

forming an outermost surface of the display assembly." '027 patent File Hist.: Preliminary Amend. (Feb. 19, 2019), 3. Again, this makes sense, as "protective layer" and "display layer" have meanings that are discernible to an ordinary artisan, and in this case the "protective layer" would be the outermost layer. However, claim 6 was amended to recite "the assembly as recited in claim 1 further comprising a protective layer disposed over the outer layer and forming an outermost surface of the assembly." *Id.*; *see also* '027 patent at cl. 2. Thus, in this example, the outer layer would not even include the "outermost" layer of the assembly, because the "protective layer" is that outermost layer.

These inconsistencies make the claims nonsensical and therefore render the term "outer layer" indefinite. *See Synchronoss Techs., Inc. v. Dropbox, Inc.*, 987 F.3d 1358, 1366-67 (Fed. Cir. 2021) (explaining that because the claims "are nonsensical and require an impossibility—that the digital media file contain a directory of digital media files" they "are indefinite as a matter of law"); *Trustees of Columbia Univ. v. Symantec Corp.*, 811 F.3d 1359, 1367 (Fed. Cir. 2016) ("The claims are nonsensical in the way a claim to extracting orange juice from apples would be, and are thus indefinite."). As Mr. Donley explains, if an outer layer can have multiple layers, and does not even need to include the "outermost" layer, then a POSA has no reasonable way to discern what constitutes the "outer layer" of the assembly. Donley Decl. ¶¶ 73-80. In a five-layer assembly, can the top four layers be the "outer layer"? The middle three?

Plaintiffs' construction of "at least one layer that is outermost" does not resolve these issues, because it is both incorrect and virtually unlimited in scope. It is incorrect because, as described above, claim 6 makes clear that the "outer layer" need not include the "outermost" layer. And it is virtually unlimited in scope because it includes any number of layers beneath the

outermost layer, giving the term no objective boundaries. The Court should therefore hold that the term "outer layer" is indefinite.

C. "(an) intermediate layer"

The dispute between the parties regarding the term "intermediate layer" appears to be whether an "intermediate layer" must be between other "layers" or whether it is sufficient for the layer to simply be between other "materials." The term "intermediate" can only be understood as a relative position to at least two other reference objects' positions. Donley Decl. ¶ 87. In other words, the use of the term "intermediate" in conjunction with an object indicates that the object is between other objects of the same type. As such, a POSA "would understand that 'an intermediate layer' requires at least two other layers on either side for the 'intermediate layer' to be 'intermediate.'" Donley Decl. ¶ 83. If that were not the case, the term "intermediate layer" would be essentially meaningless and therefore indefinite. Donley Decl. ¶ 87.

Plaintiffs' arguments do not compel a contrary result. As Plaintiffs acknowledge, every example they cite refers to "one or more 'intermediate layers between other layers.'" Op. Br. at 8. This includes Figure 7, which shows an "intermediate adhesive layer" and an "intermediate barrier layer" between a "display layer" and another, separate "adhesive layer." '741 patent at 11:23-30. Plaintiff cites to no examples (because there are none) of intermediate layers that are *not* interposed between other layers. The Court should therefore adopt Revvo's construction.

D. "vulcanized" / "vulcanized to[gether]"

The Court should adopt Revvo's construction, which is consistent with the claims, specification, purpose of the invention, and understanding of a POSA. Plaintiff's construction, on the other hand, stretches the term "vulcanized" to include forms of adhesion that would not be included in any reasonable interpretation of the term, ignoring the numerous descriptions of "vulcanization" in the specification that teach away from its overly broad construction.

The term "vulcanized" or "vulcanization" has a specific meaning to a POSA in the field of tire or tire sticker manufacturing. In particular, a POSA would understand that "vulcanization" is defined by the following characteristics: (1) it relates to rubber or similar elastomeric material, (2) it results in the formation of a permanent and irreversible crosslinked network that is essentially insoluble in any solvent, and (3) it involves a heat or chemical curing process. Donley Decl. ¶ 91.

First, the term "vulcanization" specifically refers to the process of curing elastomers like rubber, as opposed to other types of materials. Donley Decl. ¶ 92. As Mr. Donley describes, "[v]ulcanization is a historical term that arose in the mid–nineteenth century to describe the heat and sulfur-based curing of rubber." *Id.* Since then, "it has come to refer specifically to the curing of elastomeric materials rather than other classes of polymers or substrates." *Id.* This is supported by the specification, which repeatedly refers to "vulcanized rubber." *See, e.g.*, '741 patent at Title, and in the first four columns alone: 1:16, 1:61, 1:67, 2:10, 2:29, 2:62, 3:12, 3:23, 3:32, 3:40, 3:50-51, 3:54, 3:63, and 4:23.

Second, the "entire purpose of vulcanization is that in results in the formation of an irreversible crosslinked network." Donley Decl. ¶ 93. Vulcanization is considered permanent and irreversible "because it creates strong chemical cross-links between the long polymer chains that exist in elastomeric material, resulting in a rigid, three-dimensional network." *Id.*; *see also* ¶¶ 94-96. Because vulcanization results in such a strong network of cross-links, vulcanized materials cannot readily be dissolved using any standard solvent. *Id.* ¶¶ 99-102. In fact, the typical "test" to figure out if something is vulcanized is to apply a common compatible solvent and see if the bonds break down. *Id.* ¶ 100. If they do, the material is not vulcanized. *Id.* The permanence and insolubility of vulcanized materials is what "makes the direct reprocessing and

recycling of tires and waste rubber impossible." *Id.* ¶ 96. Indeed, the specification repeatedly refers to vulcanization as "permanent." *See, e.g.*, '741 patent at 2:58-59 ("the outermost aesthetic layer which is ***vulcanized for a permanent bond***"); *id.* at 3:28-20 ("the outermost aesthetic display layer which is ***vulcanized for a permanent bond*** to a second display layer 33").

Third, "vulcanization always involves a heat or chemical curing process." Donley Decl. ¶ 97. The formation of the strong chemical cross-links described above require "either the application of heat" or "the application of chemical curing agents capable of effecting cross-linking at the conditions used, or both." *Id.* This is again consistent with the specification, which describes the intermediate layer as being "formed from a material capable of being chemically bonded to or vulcanized with" the display layer. '741 patent at 6:27-30. Plaintiffs' citations to the specification do not contradict these fundamental characteristics. Plaintiff first points to passages in the specification that identify both "temperature" and "pressure" as a "vulcanizing conditions," but none of these passages suggest that pressure alone is sufficient for vulcanization. Op. Br. at 9 (citing '741 patent at 7:48-49, 8:46-47, 9:36-37, 10:46-47, 12:66-67). Although pressure may be applied to assist in vulcanization, "pressure by itself cannot and does not cause vulcanization in the absence of sufficient heat or appropriate vulcanizing agents." Donley Decl. ¶ 106.

Plaintiff next points to a passage in the specification describing various materials that can be used for the "adhesive layer" of the display assembly, including "vulcanizing cements" or "water-based or solvent based polymer polyurethane based adhesives." Op. Br. at 10 (citing '741 patent at 7:11-13). Plaintiff contends that these "solvent-based vulcanizing cements" are "dissolvable in a solvent." Op. Br. at 10 (citing Mineur Decl. ¶¶ 45-46). Even if true, that does not mean that the resulting vulcanized material (*i.e.*, the material that exists after the

vulcanization process has completed) is dissolvable in a solvent. As Mr. Donley explains, vulcanized materials are "essentially insoluble" because of the densely crosslinked network that is characteristic of vulcanization. Donley Decl. ¶ 99. While there are now a limited number of highly specialized solvents that can perform some degree of "devulcanization," these solvents are the exception—not the rule. *Id*. ¶¶ 96, 101. And even these "devulcanizing" products cannot return the vulcanized material to its original form. *Id.*

Revvo's construction includes the fundamental characteristics of vulcanization, and is how a POSA would understand the term "vulcanized" in the context of the claims and the specification. Plaintiffs' construction, on the other hand, is so broad that it includes virtually every form of bonding two materials together, including forms that no POSA would ever consider to be vulcanization. As Mr. Donley explains, "vulcanization" expressly contemplates the formation of an irreversible crosslinked network of polymers. Donley Decl. ¶ 102. This "stands in contrast with 'non-vulcanized' materials that can readily be separated using standard solvents." *Id*. Plaintiffs' construction has none of the characteristics that define what differentiates "vulcanization" from any other type of bonding, and therefore cannot be correct (and indeed, is so vague as to place no objective boundaries on the term, thus rendering it indefinite). *See id*. ¶¶ 103-108. The Court should adopt Revvo's construction.

E. "barrier material composition" / "material composition that acts as a barrier"

Revvo's proposed construction is supported by the claims, specification, and prosecution history. Plaintiffs' is not.

The claim language regarding the "barrier material composition" was added during prosecution to overcome rejections of invalidity. '027 patent File Hist.: Preliminary Amend. (Feb. 19, 2019), 2; '027 patent File Hist.: Response to Non-Final Office Action (Mar. 1, 2021),

2-7. The applicant specified that the "outer layer" of the assembly comprises a "barrier material composition," and explained to the examiner that "the purpose of the "barrier material composition" is "to mitigate the unwanted migration of material from the vulcanized rubber article or tire." '027 patent File Hist.: Response to Non-Final Office Action (Mar. 1, 2021), 6. This is consistent with the specification's description of barrier material as "minimiz[ing] or prevent[ing] the migration of any unwanted constituents . . . [that] may otherwise operate to damage or degrade the design image and/or feature provided by the display layer []." '027 patent at 6:33-56; *see also id*. at 5:64-6:4; 7:51-58; 8:37-42.

A POSA reading the "barrier material composition" language in the context of the specification and prosecution history would understand that the purpose of the barrier material is to "prevent[] chemical migration that would harm the display's visual integrity," and in particular discoloring chemicals like antioxidants that may be present in the "vulcanized rubber article" or tire. Donley Decl. ¶ 113. Plaintiffs' only argument to the contrary is that claim 5 recites that the barrier material composition impairs migration of "a material constituent within the assembly" when the assembly is attached to a tire, and claim differentiation suggests that the independent claim must be broader than the dependent claim. Op. Br. at 10. But claim 5 adds that the barrier material composition impairs migration of an unwanted material constituent "*within* the assembly" as opposed to from the tire alone, and therefore is different in scope without twisting the meaning of the claim term as Plaintiffs suggest. '027 patent at cl. 5.

Plaintiffs' proposed construction is incorrect because it is superfluous of other limitations and reads out the term "barrier" entirely. Plaintiffs' definition of a "barrier material composition"—"material composition that has properties of shock absorbance, elastomeric expansion and/or contraction"—describes properties inherent in every elastomeric material.

Donley Decl. ¶ 115. The asserted claims all separately require that the outer layer is made of "elastomeric material," and so the addition of the "barrier material composition" limitation would be meaningless. '027 patent at cls. 1, 11, 19. In other words, "the proposed construction is circular and would render the claims to only mean that the elastomeric outer layer is elastomeric." Donley Decl. ¶ 115. It also reads out the word "barrier," as it does not describe how the "barrier composition" acts as a "barrier" at all. *Id.* ¶ 116. This is inconsistent with both the specification and prosecution history, which expressly added this limitation to overcome a prior art rejection.

F. "cavity"

The plain and ordinary meaning of "cavity" as understood by a POSA is "a hole or hollow space." Donley Decl. ¶ 120. Plaintiffs' proposed construction defines "cavity" by one of its possible functions. Nothing in either the claims or the specification *requires* that a "cavity" accommodate an element or object. Indeed, claim 8 of both the '741 patent and '027 patent *adds* that there is "an element disposed within the cavity," indicating that "the cavity" recited in the preceding claims need not contain an element. '741 patent at cl. 8; '027 patent at cl. 8. Plaintiffs' citations only indicate that certain embodiments of a cavity accommodate an element or object, not that every "cavity" must. *See* Op. Br. at 11.

G. "direct contact"

Plaintiffs again offer a construction that has no support in the specification and is contrary to the term's plain and ordinary meaning. In accordance with its ordinary usage, a POSA would understand the claims' recitation of "direct contact" between the intermediate and display layers as indicating that there is nothing interposed between those two layers. Donley Decl. ¶ 128. There is nothing that requires two objects that are in "direct contact" with each other to be "bonded to" each other. *Id.* ¶¶ 128-133. The fact that "direct contact" need not

include bonding is evident from other parts of the claims, which separately require that the intermediate and display layers be "vulcanized" together—a specific form of "bonding." *See* '741 patent at cls. 1, 11. Plaintiffs' citations simply show that there are certain embodiments where the layers are bonded to each other—they offer no insight into what the term "direct contact" means.

H. "before attachment with the vulcanized rubber article" / "before attachment to the vulcanized rubber article"

Every asserted claim of '741 patent requires that "one or more display layers and the intermediate layer are vulcanized together ***before attachment with the vulcanized rubber article***," or tire. '741 patent at cls. 1, 11. This constitutes a method step with a temporal requirement within an apparatus claim, rendering it indefinite under *IPXL Holdings, L.L.C. v. Amazon.com, Inc.*, 430 F.3d 1377, 1384 (Fed. Cir. 2005).

The Federal Circuit has consistently held that apparatus claims that contain "use" requirements are indefinite because they make it '"unclear whether infringement . . . occurs when one creates a[n infringing] system, or whether infringement occurs when the user actually uses [the system in an infringing manner]." *UltimatePointer, L.L.C. v. Nintendo Co.*, 816 F.3d 816, 826 (Fed. Cir. 2016) (alteration in original) (quoting *IPXL Holdings*, 430 F.3d at 1384). Such is the case here. The claims require knowing when the display assembly is attached to the tire—a step that the '741 patent expressly states may be performed "by a consumer . . . at a point subsequent to the manufacture of the vulcanized rubber article"—in order to determine whether infringement has occurred. '741 patent at 7:19-22. This renders the claim indefinite under *IPXL Holdings* and its progeny. Contrary to Plaintiffs' position, a "verb" gerund is not required for indefiniteness—what matters is that the claims "create confusion as to when direct infringement

occurs." *MasterMine Software, Inc. v. Microsoft Corp*., 874 F.3d 1307, 1314 (Fed. Cir. 2017) (quotations and citation omitted).

The indefiniteness of this limitation is further underscored by the testimony of Plaintiffs' expert. According to Mr. Mineur, the vulcanization process "continue[s] at some rate over time," including "well after curing of the tire during the molding process of the tire and during use." Mineur Decl. ¶ 20. Thus, according to Mr. Mineur, the display and intermediate layer may or may not be vulcanized before they are attached to the tire. *Id.*; *see also* Donley Decl. ¶¶ 136-40. This means is that the same display assembly could be "infringing" or "not infringing" depending on when that attachment occurs. That is a hallmark of indefiniteness. *See Halliburton Energy Servs., Inc. v. M-I LLC*, 514 F.3d 1244, 1254–55 (Fed. Cir. 2008) (holding the claim term "fragile gel" indefinite where the patentee's proposed construction could result in same product infringing sometimes but not infringing other times).

I. "(a) housing"

The Court should adopt Revvo's construction, which is consistent with the language of the claims, express statements regarding claim scope in the specification and prosecution history, and the entire purpose of the invention. Plaintiffs' construction, in contrast, treats the term "housing" in isolation, blatantly ignoring the context in which it is used and broadening the scope far beyond what is supported by the patent.

The parties appear to agree that the term "housing" refers to a "protective" structure that protects a sensor device located within the housing (and, more specifically, within an "internal cavity" within the housing). The parties' primary dispute is whether the claimed housing must: (1) surround the sensor device on all sides; (2) contain mechanical means (*i.e.*, "surface features") to fix and retain the placement position of the sensor device within the internal cavity;

and (3) not contain any coating or filling agent that fixes and retains the placement position of the sensor device. The claims, specification, and prosecution history all make clear, however, that these three features are essential elements of the claimed "housing."

The requirement that the housing "surround" the sensor on all sides stems directly from the claim language. Every claim of the '421 patent describes the "housing" as defining or enclosing an "internal cavity" and an "electrical sensor device" within that internal cavity. *See, e.g.*, '421 patent at cl. 1 (requiring "a housing comprising an outer surface and an internal cavity that is enclosed within the housing" and "an electrical sensor device that is disposed within the internal cavity"); cl. 28 (requiring "a housing comprising an outer structure that defines an open internal cavity therein" and "an electrical sensor device disposed within the internal cavity"); cl. 41 (requiring "installing an electrical sensor device within an internal cavity of a housing, wherein the housing includes an outer structure that defines the internal cavity"). The word "internal" indicates that the cavity is surrounded on all sides by the housing; otherwise, it would simply be a "cavity." Davenport Decl. ¶ 44. Indeed, the patent *only* uses the term "internal cavity" to describe spaces surrounded on all sides by the housing; when describing spaces with at least one open side, the specification uses the term "open chamber" or just "cavity." *See, e.g.*, '421 patent at Fig. 5, 12:1-4 (explaining that once the housing is assembled, it can be "disposed within the open chamber or cavity **52**"). This is consistent with the specification's description of the housing as being "specially configured to include an internal cavity configured to retain the electrical sensor device in an immovable fixed state therein, and to provide a ***protective surrounding*** to the electrical sensor device." *Id.* at 10:56-59; *see also id.* at 6:15-16 ("the housing comprises a wall structure that surrounds the internal cavity"); *id.* at 6:53-54 ("the electrical sensor device is surrounded by the housing"); *id.* at 10:47-51 ("housing bottom section

48 [is] shown in an unattached form that is configured for attachment with a bottom portion **50** of the housing wall structure **34** to thereby close off the housing internal cavity **38**"); *id.* at 11:60-63. ("the housing bottom section **48** is attached to the housing wall structure **34** such that the housing **12** protectively surrounds the electrical sensor device"); Davenport Decl. ¶¶ 43-51.

None of Plaintiffs' counterarguments have merit. As an initial matter, Revvo's use of the term "casing" simply reflects its position that the claimed "housing" surrounds or "encases" the electrical sensor device within. Plaintiffs' proposal ("cover"), on the other hand, invites improper confusion with the "top cover 22" described in the patent, which is only a portion of a potential housing structure and does not alone constitute a "housing" or "housing assembly." *See, e.g.,* '421 patent at 11:34-12:04, Fig. 5. Nowhere does the '421 patent use the term "cover" to describe the housing generally.

Plaintiffs' argument that the housing need not have a "bottom section" because that is an optional limitation of dependent claim 3 is equally without merit. Claim 3 adds not only that the housing comprises a "top cover, a wall structure, and a base section," but also that those structures "may be formed from the same or different materials" and that they may be "separate or integral with each other." '421 patent at cl. 3. Claim 3 thus describes various structural options for the housing, *all of which* surround the sensor device on all sides. This is entirely consistent with Revvo's construction.

Plaintiffs are also incorrect that the patent's description of an optional "opening" in the top cover of the housing to permit air flow to the sensor somehow obviates the requirement that the housing "surround" the sensor. *See* Op. Br. at 14-15; *see also* '421 patent at 14:12-54. The specification's use of the term "opening" to describe a cavity that is "positioned to enable air outside of the housing to reach the internal cavity" supports Revvo's position that the "internal

cavity" must be surrounded on all sides by the housing. '421 patent at 14:25-28. If the internal cavity were not fully enclosed, there would be no need for an "opening" to permit air to reach it.

In addition, to a POSA in the field of tire sensors, the plain and ordinary meaning of the term "surround"—*i.e.*, "to enclose or confine on all sides"— does not foreclose the presence of small holes or openings within those sides. Davenport Decl. ¶¶ 48-51. This also comports with the use of the word "surround" in everyday English and in other patent cases. *Id.* ¶ 51 & n.31; *see also Changzhou Kaidi Elec. Co., Ltd. v. Okin Am., Inc.*, No. CCB-13-1798, 2014 U.S. Dist. LEXIS 64910, at *7 (D. Md. May 12, 2014) (construing the term "surrounds" to mean "completely ***or nearly completely*** encloses") (emphasis in original); *Sud-Chemie, Inc. v. Multisorb Techs., Inc.*, No. 3:03-cv-29-S, 2006 U.S. Dist. LEXIS 77235, at *21-22 (W.D.K.Y. Oct. 20, 2006) (explaining that the "ordinary meaning of the term" surround is "'encircle on all sides' or 'confine on all sides'"). A soldier may be "surrounded" by enemies even if those enemies are not physically touching each other, so long as the soldier is effectively confined within the space being surrounded. Likewise, a sensor is "surrounded" by a housing so long as it is effectively confined on all sides by the housing. Davenport Decl. ¶ 51. In the embodiments Plaintiffs point to, the "sensor device" is still clearly confined on all sides within the housing regardless of the presence of the small opening **98**. *Id.*; *see also* '421 patent at Fig. 1, 14:24-37.

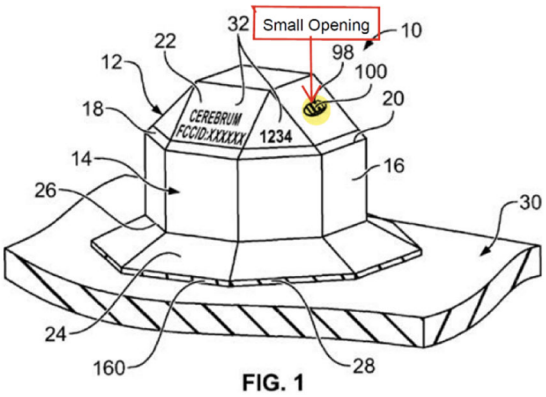

FIG. 1

Plaintiffs have therefore failed to point to *any* example in the patent of an "internal cavity" that is not surrounded on all sides by the housing.

The other requirements—that the sensor assembly use mechanical means and not use filling agents to fix the position of the sensor device—stems from both the claim language and express statements regarding claim scope made by the inventor. The claims all use language that indicates that the sensor device is mechanically fixed in position to the housing. *See, e.g.*, '421 patent at cl. 1 (describing the sensor device as "attached" within the housing "to prevent movement of the device within the internal cavity"), cl. 28 (describing the sensor device as "having a fixed placement" within the internal cavity "by one or more surface features of the housing"), cl. 41 (describing that the sensor device is "installed" within the housing); *see also* Davenport Decl. ¶ 52. Consistent with this language, the '421 specification contains numerous statements that make it clear that all of the disclosed "housing[s]" rely exclusively on mechanical fixturing to fix the position of the electrical sensor within the housing's internal cavity, disclaiming and excluding the use of conventional coating or filling agents or material for fixturing the sensor device within the housing. *See* Davenport Decl. ¶¶ 53-54.

The '421 patent provides, for example: "***Sensor assembly housings 12 as disclosed herein*** are constructed to provide the inside or internal cavity **38** configured in a manner to fixedly retain and house the electrical sensor device **40** therein ***without the need for filling agents or materials***." '421 patent at 12:41-45. The specification later repeats and elaborates on how the disclosed housing assemblies rely on mechanical fixturing alone—without the need for conventional filling agents or materials—to secure and retain a sensor device therein:

> ***A further feature of the sensor assembly housings 12 as disclosed herein*** is the construction of the internal cavity **38** and ***the use of surface features 44 to mechanically fix and retain the placement position of the electrical sensor device 40 therein***. A common technique used to assist in fixturing the electrical

> sensor device **40** known within the automotive industry is to fill the internal cavity with a coating material such as a neutral silicone or the like for purposes of retaining placement position. ***A feature of sensor assemblies as disclosed herein is that they do not use or require the use of <u>any</u> such coating or filling agents or materials for <u>any</u> fixturing of the electrical sensor device 40 within the internal cavity 38. Again***, structural support of the electrical sensor device **40** within the internal cavity **38** ***to fix the position of the electrical sensor device 40 therein is provide[d] by mechanical fixturing***, e.g., through the use of surface features within the housing internal cavity **38**.

'421 patent at 13:52-14:1. Similarly, the applicant emphasized repeatedly during prosecution that key features of the claimed invention "would ***serve no purpose*** and ***be inconsistent*** as used with a resin-filled housing." '421 patent File Hist.: Response to Non-Final Office Action (May 23, 2023), 15; *see also* Davenport Decl. ¶¶ 55-57.

These statements make it clear that the claimed housing uses mechanical fixation alone, without the use of *any* filling agents or materials for *any* fixturing of the sensor device. It is well-established that: "[w]here the specification makes clear that the invention does not include a particular feature, that feature is deemed to be outside of the reach of the claims of the patent, even though the language of the claims, read without reference to the specification, might be considered broad enough to encompass the feature in question." *SciMed Life Sys., Inc. v. Advanced Cardiovascular Sys., Inc.*, 242 F.3d 1337, 1341 (Fed. Cir. 2001); *see also id*. at 1343-44 (finding that specification language that provided that structure containing coaxial lumen sleeves is "the basic sleeve structure for all embodiments of the present invention ***contemplated and disclosed herein***" defined the claimed invention "in a way that excludes" non-coaxial lumens); *Akeva L.L.C. v. Nike, Inc.*, 817 F. App'x 1005, 1009 (Fed. Cir. 2020) (agreeing that "numerous statements in the specification make it clear a conventional fixed rear sole is not within the scope of the invention"); *Indivior Inc. v. Dr. Reddy's Lab'ys, S.A.*, 752 F. App'x 1024, 1032 (Fed. Cir. 2018) ("Here, the specification makes clear that the invention does not include films that were dried using conventional top air drying."). Like *SciMed*, *Akeva*, and *Invidor*,

the ’421 patent specification repeatedly uses language that makes it clear that this disclosed feature—*i.e.*, use mechanical fixation alone, without the use of *any* filling agents or materials for *any* fixturing—applies to every “housing” disclosed and described in the ’421 patent. It repeatedly states that this feature applies to the sensor assembly housings “as disclosed herein.” *See* ’421 patent at 12:41-45, 13:52-14:1.

Plaintiffs’ arguments do not alter this unambiguous disclaimer. Plaintiffs contend that “the patent actually distinguishes the prior art that lacked any such surface features and ***only*** relied on coatings or filling agents or materials to prevent movement of the sensor device.” Op. Br. at 15-16 (emphasis in original). The passage from the specification Plaintiffs cite, however, only provides: “[a] common technique used ***to assist in fixturing*** the electrical sensor device **40** known within the automotive industry is to fill the internal cavity with a coating material such as a neutral silicone or the like for purposes of retaining placement position.” ’421 patent at 13:56-60. The specification does ***not*** say the prior art sensor housings used coating or filling material as the ***exclusive*** means of fixturing a sensor device in an internal cavity; rather, it says that this was a common technique “to assist in fixturing the electrical sensor device.” *Id.* This indicates that other fixturing techniques (including, *e.g.*, mechanical fixturing using surface features of the internal cavity) were also employed in conjunction with this known technique using fillers. Indeed, as Revvo’s expert Dr. Davenport explains, most prior art sensor assemblies that used filling materials to fix the position of the sensor used some form of mechanical means (including, for example, surface features of the housing) to keep the sensor in place during the filling process. Davenport Decl. ¶¶ 58-60. Plaintiffs also completely ignore the next sentence in the specification, which eliminates any potential hint of ambiguity: “A feature of sensor assemblies as disclosed herein is that they ***<u>do not use</u>*** or require the use of any such coating or filling agents

or materials for any fixturing of the electrical sensor device **40** within the internal cavity **38**." '421 patent at 13:60-64.

Plaintiffs next contend that the "unfilled open space" language used in claim 1 "itself indicates that only a portion of the internal cavity in the housing may be coated or filled." Op. Br. at 16. Not so. As described below with respect to the term "unfilled open space," this limitation was specifically added to distinguish the claims from prior art that used filling material. *See infra* at 29-30. The "unfilled open space" language further emphasizes that *no* filling is used to fix placement of the sensor device within the internal cavity, not that a portion of the cavity may be filled.

Plaintiffs also contend that the specification describes examples that "demonstrate that the term can include injection molded coatings or filling agents." Op. Br. at 16. This is unsupported. The example Plaintiffs point to describes that the *housing* can be made using an injection molding process, and that the sensor may be secured within the internal cavity by forming the housing "from a single material surrounding" the sensor device during creation of the housing. '421 patent at 12:61-66, Fig. 8. Nothing in this example describes the use of "coating or filling agents or materials" to fully or partially fill the internal cavity of the housing in order to fix the sensor in place. '421 patent at 12:61-66, Fig. 8. Instead, just like every other embodiment disclosed in the '421 patent, the sensor is fixed in place by the housing itself. *Id.* And even if this embodiment did describe filling the internal cavity with filling agents or materials (which it does not), it is clear that this embodiment is not within the scope of the issued claims, which were amended to include features (e.g., "unfilled open space," "surface features" or "an opening extending from an outer surface of the housing to the internal cavity") that this embodiment does not include. *See id.* Those amendments are "'probative evidence' that an

embodiment is not within the scope of an asserted claim" and should be disregarded when interpreting the claim requirements. *PSN Ill., LLC v. Ivoclar Vivadent, Inc.*, 525 F.3d 1159, 1166 (Fed. Cir. 2008).

Finally, Plaintiffs attack a straw man when arguing there "is not a disclaimer or disavowal of any and all uses of such filling agents or materials along with the claimed surface feature[s]." Op. Br. at 16 (quotations and citation omitted). Revvo has not argued "any and all uses" of such filling agents has been disclaimed. Revvo's proposed construction tracks the unambiguous language in the specification that "makes it clear that the invention does not include a particular feature"—*i.e.*, the use of coating or filling agents or materials to fix and retain the placement position of the electrical sensor device in the internal cavity. *See SciMed*, 242 F.3d at 1341; '421 patent at 12:41-45, 13:52-14:1. Revvo's proposed construction covers no more, and no less, than what the specification clearly disclaims.

J. "internal cavity"

The parties appear to agree that the "internal cavity" described by the '421 patent must be "open" or "hollow" space. The disagreement between the parties is whether that "open" or "hollow space" must be surrounded by the housing.[5] For the reasons described with respect to the term "housing," above, it must. Plaintiffs' proposed construction gives no meaning to the term "internal," rendering it so ambiguous as to be essentially indefinite. Davenport Decl. ¶¶ 62-65; *see also Nautilus, Inc. v. Biosig Instruments, Inc.*, 134 S. Ct. 2120, 2129-30 (2014) (explaining that a claim is indefinite if one of ordinary skill in the art cannot reasonably determine the scope of the claim); *see also Changzhou Kaidi*, 2014 U.S. Dist. LEXIS 64910, at

[5] Revvo's construction also seeks to make clear that the "housing" is the protective casing that surrounds the "internal cavity," whereas the internal cavity is the hollow space within the housing, as opposed to casing itself. Plaintiffs' examples do not refute this clarification.

*7-8 (rejecting construction of "surrounds" as "generally encloses" because it "lacks precision" and "would render the claims indefinite").

K. "enclosed/enclosed within the housing"

The parties again disagree whether the claims contain a requirement that the internal cavity is surrounded on all sides by the housing. They do. In addition to the reasons described above for the terms "housing" and "internal cavity," the claim element of "an internal cavity that is enclosed within the housing" explicitly imposes this requirement. '421 patent at cl. 1. The plain and ordinary meaning of the term "enclosed" is "surrounded or closed off on all sides." Davenport Decl. ¶ 68. The claim's description of the internal cavity as enclosed *within the housing* clearly indicates that it is the housing itself that is surrounding the cavity. *Id.* The distinction Plaintiffs attempt to make between "enclosed within" and "enclosed by" is specious—an object is typically both enclosed *by* something and enclosed *within* it. Plaintiffs' construction of "surrounded within the housing" is both insolubly ambiguous (surrounded by what?) and contrary to every example in the specification that makes clear that it is the housing that surrounds the internal cavity. *Id*. ¶¶ 68-69; *see also supra* at 23.

L. "unfilled open space" / "open space"

Claim 1 requires that "the internal cavity comprises an unfilled open space above or below the electrical sensor device." '421 patent at cl. 1; *see also id.* at cl. 31 (reciting an "internal cavity" that "comprises an open space above or below the electrical sensor device disposed within the internal cavity"). The parties generally agree that an "unfilled open space" or "open space" cannot contain filling agents or materials.[6] The parties disagree whether this

[6] Revvo maintains that the plain and ordinary meaning of the term "open" in this context means "empty," but does not believe based on current discovery that the distinction constitutes a material

claim language allows for portions of the internal cavity that contain filling agents or materials that fix the placement of the sensor device. It does not.

The specification of the '421 patent does not use the term "unfilled open space." That term was added during prosecution of the '421 patent in an attempt to distinguish the claims from a prior art reference called "Saito." '421 Patent File Hist.: Response to Non-Final Office Action (May 23, 2023), 13. According to the applicant, the housing in Saito was "filled with resin to protect the sensor components" and therefore could not "disclose the feature that the housing internal cavity includes an unfilled open space[.]" *Id. at* 13-14. Indeed, the applicant argued that not only did Saito fail to disclose an "unfilled open space," any modification of Saito to *include* such open space would be "contrary to the fundamental structure of Saito" and "frustrate the purpose of Saito's sensor construction that is intentionally filled with resin to protect the sensor components." *Id.* at 14. In other words, the combination of an *unfilled* open space with a *filled* space would be "improper" and "bizarre." *Id.*; *see also* Davenport Decl. ¶ 73. The applicant's position is supported by the specification, which explicitly states the disclosed sensor assemblies "***do not use*** . . . coating or filling agents or materials for any fixturing of the electrical sensor device [] within the internal cavity []." '421 patent at 13:52-14:01.

The intention of the applicant to disclaim any combination of "open space" with "filled space" is further supported by the testimony of both parties' experts. As Plaintiffs' expert Dr. Spangler explains, it is a "foundational requirement" of any sensor assembly that uses "potting" or filling to *avoid* any "bubbles, cavities, voids, or unfilled areas." Spangler Decl. ¶ 44; *see also* Davenport Decl. ¶ 74. This is because a void or unfilled area in a filled cavity can cause a

---

dispute between the parties. Revvo reserves the right to address issue should Plaintiffs clarify their infringement positions/other discovery reveals a material dispute regarding this distinction.

pressure differential or introduce contaminates that might impact the sensor. Spangler Decl. ¶¶ 45-46; *see also* Davenport Decl. ¶ 75. This testimony thus fully supports the applicant's position that it would be "improper" to introduce open spaces in internal cavities that use fillings to protect and fix sensor components.

Given this express disclaimer, any interpretation of "unfilled open space" or "open space" that suggests that there may be other, "filled" space within the internal cavity is at least incorrect and, given the ambiguity it injects, renders the claim potentially indefinite. Davenport Decl. ¶ 75. To the extent that the Court is inclined to adopt Plaintiffs' proposed construction, it should be clarified to mean "space without filling agents or materials within an internal cavity that does not otherwise contain any such filling agents or materials."

M. "surface feature[s]"

The Court should adopt Revvo's proposed construction, which reflects the plain and ordinary meaning of the term "surface feature." Plaintiffs' proposed construction improperly limits a "feature" to a "structure," which is contrary to the specification's description of an example of a "surface feature" as a "recessed groove." '421 patent at 10:25-26; *see also* Davenport Decl. ¶ 78. Plaintiffs' proposed construction also improperly *broadens* the term to include features that are "on" the surface, rather than *part of* the surface. Davenport Decl. ¶ 79. Every example that Plaintiffs give (ribs and tabs) are features that are incorporated into and extend outward *from* the surface; they are not "on" the surface as Plaintiffs suggest. '421 patent at 10:40-46; *see also* Davenport Decl. ¶ 79. Plaintiffs' construction would include structures that are separate from but positioned on top of the surface, which would not reasonably constitute a "surface feature." *Id.*

OF COUNSEL:
Karen Boyd
Karen.Boyd@ThompsonHine.com
Bethany Bengfort
Bethany.Bengfort@ThompsonHine.com
Camilla M. Bykhovsky
Camilla.Bykhovsky@ThompsonHine.com
Victoria A. Moffa
Victoria.Moffa@ThompsonHine.com
THOMPSON HINE LLP
155 Bovet Road, Suite 600
San Mateo, California 94402
(650) 521-5930

/s/ Kelly E. Farnan
Kelly E. Farnan (#4395)
Sara M. Metzler (#6509)
Richards, Layton & Finger, P.A
One Rodney Square
920 North King Street
Wilmington, DE 19801
(302) 651-7700
farnan@rlf.com
metzler@rlf.com

Attorneys for Defendant Revvo Technologies, Inc.

Dated: January 14, 2026

CERTIFICATE OF SERVICE

I hereby certify that on January 14, 2026, true and correct copies of the foregoing document were caused to be served on the following counsel of record as indicated:

BY ELECTRONIC MAIL
Karen Jacobs
Jennifer Ying
E. Paul Steingraber
Morris, Nichols, Arsht & Tunnell LLP
1201 North Market Street
Wilmington, DE 19801

BY ELECTRONIC MAIL
Christopher D. Bright
Snell & Wilmer L.L.P.
Plaza Tower
600 Anton Boulevard, Suite 1400
Costa Mesa, CA 92626-7689

BY ELECTRONIC MAIL
Christopher Franich
Snell & Wilmer L.L.P.
Executive Center Del Mar
12230 El Camino Real, Suite 300
San Diego, CA 92130

BY ELECTRONIC MAIL
Morgan R. Povinelli
Snell & Wilmer L.L.P.
2001 K Street NW
Suite 425 North
Washington, DC 20006

/s/ Kelly E. Farnan
Kelly E. Farnan (#4395)
farnan@rlf.com