US008373551B2

(12) **United States Patent**
Laird et al.

(10) **Patent No.: US 8,373,551 B2**
(45) **Date of Patent: Feb. 12, 2013**

(54) **TIRE PRESSURE SENSOR**

(75) Inventors: **David Norman Laird**, Abbotsford (CA); **Pawel Miskiewicz**, Victoria (CA); **Darryl Dean Wasilenkoff**, Victoria (CA); **Christopher George Demetrioff**, Victoria (CA)

(73) Assignee: **Rimex Supply Ltd.**, Surrey (CA)

(*) Notice: Subject to any disclaimer, the term of this patent is extended or adjusted under 35 U.S.C. 154(b) by 567 days.

(21) Appl. No.: **12/511,533**

(22) Filed: **Jul. 29, 2009**

(65) **Prior Publication Data**

US 2011/0025487 A1 Feb. 3, 2011

(51) **Int. Cl.**
B60C 23/00 (2006.01)

(52) **U.S. Cl.** **340/442**; 73/146.5; 73/146.8; 137/227; 340/445; 340/447

(58) **Field of Classification Search** ..... 340/442, 340/445, 447; 73/146.5, 146.8; 116/34 R; 137/227; 257/415
See application file for complete search history.

(56) **References Cited**

U.S. PATENT DOCUMENTS

4,732,042	A *	3/1988	Adams	73/706
4,749,993	A	6/1988	Szabo et al.	
5,040,561	A	8/1991	Achterholt	
5,119,066	A *	6/1992	Ballyns	340/442
5,578,760	A	11/1996	Suzuki	
6,311,561	B1 *	11/2001	Bang et al.	73/708
6,612,175	B1	9/2003	Peterson et al.	
6,854,324	B2	2/2005	Landes et al.	
7,014,888	B2	3/2006	McDonald et al.	
7,021,147	B1 *	4/2006	Subramanian et al.	73/708
7,028,541	B2	4/2006	Uleski et al.	
7,093,494	B2	8/2006	Silverbrook et al.	
7,392,694	B2	7/2008	Morita et al.	
2004/0031316	A1 *	2/2004	Lundqvist	73/146
2004/0263324	A1 *	12/2004	Sanchez et al.	340/442
2005/0210993	A1 *	9/2005	Toyoda et al.	73/754

OTHER PUBLICATIONS

Canadian Intellectual Property Office examination report dated Aug. 15, 2011 issued in respect of Canadian patent application serial No. 2674254.

* cited by examiner

Primary Examiner — Brent Swarthout
(74) *Attorney, Agent, or Firm* — Oyen Wiggs Green & Mutala LLP

(57) **ABSTRACT**

A tire pressure sensor is provided having a housing, a pressure transducer within the housing electronically coupled to a transmitter, a battery within the housing connected to deliver electrical power to the pressure transducer and to the transmitter, and a pressurized compartment within the housing bounded at least partially by a flexible membrane. A first conduit extends from the pressure transducer to the compartment. An inlet port extends through the housing to allow pressurized air within the tire to contact the membrane. In particular embodiments, the pressure transducer, transmitter and battery are rubber coated and encapsulated with epoxy.

20 Claims, 3 Drawing Sheets

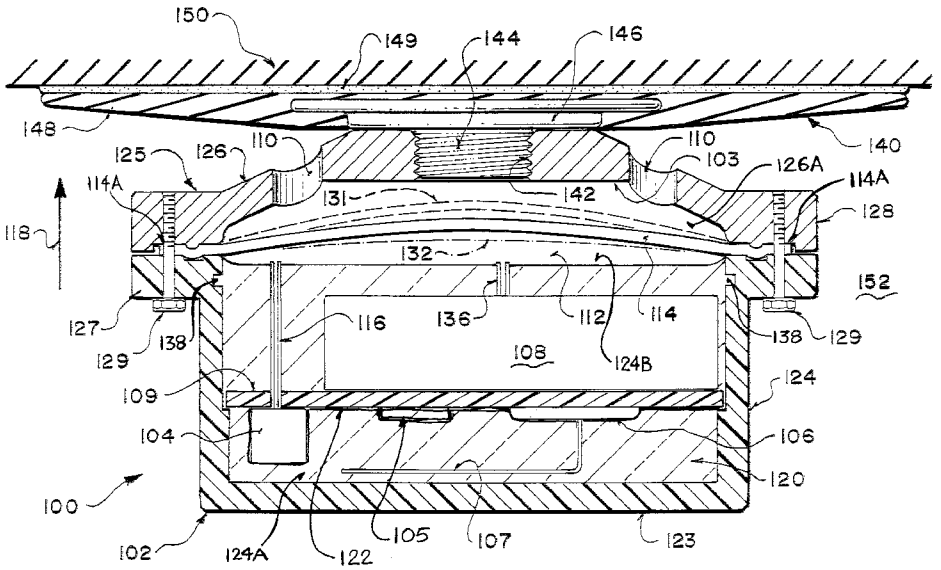

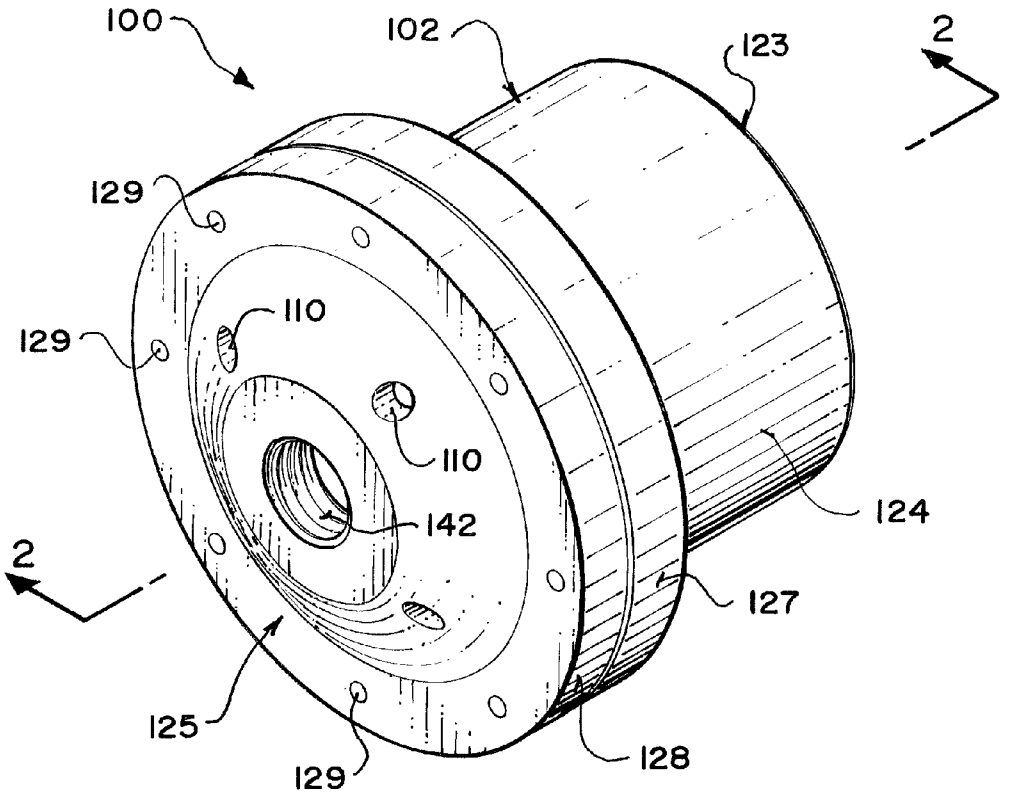

FIG. 1

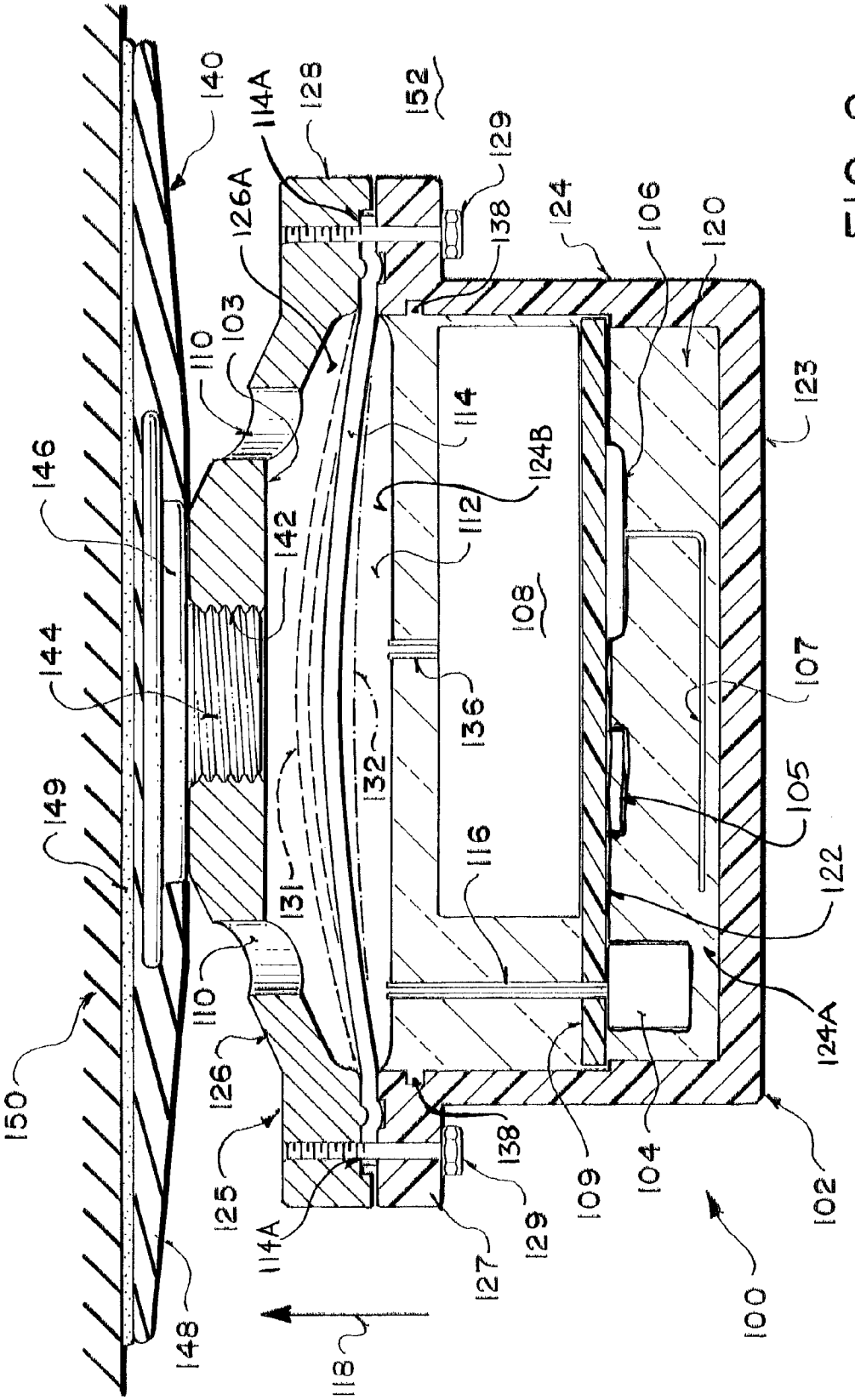
140
114A
128
152
129
126A
138
124
106
120
103
110
114
123
146
124B
112
142
108
144
136
107
132
105
149
116
122
131
110
124A
150
126
138
109
104
102
125
114A
129
127
100
148
118

FIG. 2

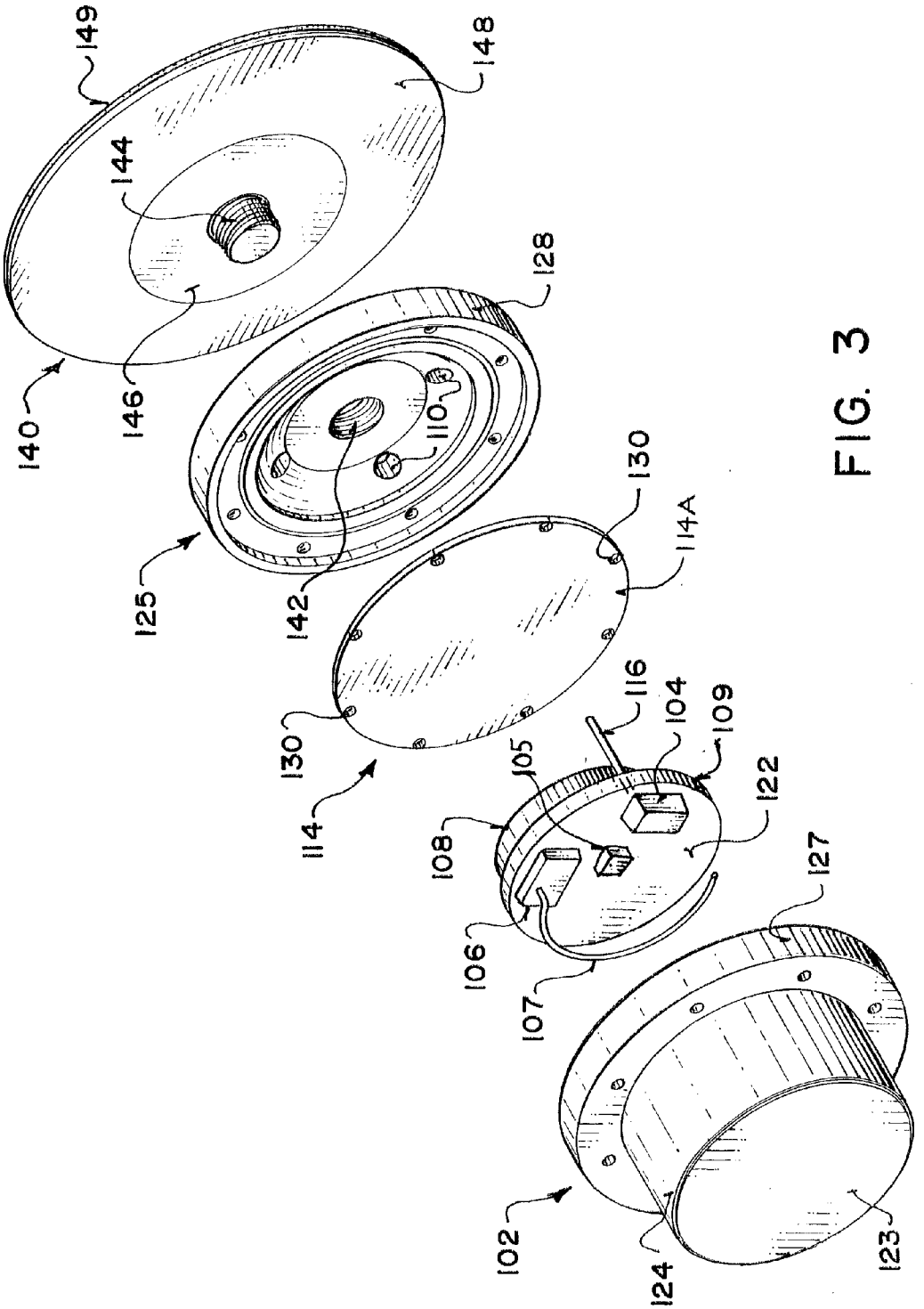
149
148
144
128
140
146
110
130
125
142
114A
130
116
104
109
105
122
114
108
127
106
107
102
124
123

FIG. 3

TIRE PRESSURE SENSOR

TECHNICAL FIELD

Pressure monitoring apparatus and systems are provided. Particular embodiments provide apparatus for monitoring air pressure in pneumatic tires.

BACKGROUND

The air pressure in vehicle pneumatic tires should be maintained within a particular range to protect against tire damage or failure, and to promote safe and efficient operation of the vehicle. For example, overinflated or underinflated tires may cause tire wear, internal tire damage, increased risk of tire penetration by sharp objects, blowouts and/or reduced vehicle fuel economy. A tire pressure monitoring system (TPMS) can be used to monitor air pressure inside a pneumatic tire and to generate an alert if the tire pressure falls outside of a desirable range for the tire. A TPMS may incorporate a tire pressure sensor placed inside a tire and means for transmitting pressure information detected by the tire pressure sensor to a receiver.

A TPMS may be used for monitoring air pressure in off-the-road (OTR) pneumatic tires used on large off-road vehicles such as mining trucks, construction vehicles or the like. The interior of OTR or other pneumatic tires may have corrosive liquids or gases, due at least in part to the presence of corrosive chemicals which are used to treat the tires to facilitate mounting and dismounting of the tires to wheels. Tire pressure sensors placed inside the tires may be exposed to corrosive liquids or gases which may corrode the sensor components, such as the sensor's electronic components and circuitry. Such corrosion may lead to failure of the tire pressure sensor.

To protect against corrosion (such as may be caused by the corrosive interior of OTR tires), some tire pressure sensors have a housing for encasing the sensor electronic components and circuitry. An opening is provided in the housing, and a filter covers the opening. The filter permits only gases (e.g. the tire's pressurized air), and not liquids, to pass through the opening to a pressure transducer contained inside the housing. However, corrosive gases contained in the tire may pass through the filter, along with the tire's pressurized air, thereby causing damage to the sensor electronic components and circuitry in the housing.

There is a general desire to provide tire pressure sensors which overcome or at least ameliorate these and/or other drawbacks.

BRIEF DESCRIPTION OF DRAWINGS

In drawings which illustrate non-limiting embodiments,

FIG. **1** is an oblique top perspective view of a tire pressure sensor according to one embodiment;

FIG. **2** is a sectional view taken along line **2-2** of FIG. **1** showing the tire pressure sensor mounted to a vehicle tire by way of a patch mount; and

FIG. **3** is an oblique bottom exploded view of the FIG. **1** tire pressure sensor and a patch mount.

DESCRIPTION

Throughout the following description, specific details are set forth in order to provide a more thorough understanding to persons skilled in the art. However, well known elements may not have been shown or described in detail to avoid unnecessarily obscuring the disclosure. Accordingly, the description and drawings are to be regarded in an illustrative, rather than a restrictive, sense.

FIGS. **1**, **2** and **3** illustrate a tire pressure sensor **100** according to a particular embodiment, for placement in an interior **152** of a pneumatic tire **150**, such as an OTR tire used in mining trucks, construction vehicles or the like. Sensor **100** incorporates a housing **102**. In the illustrated embodiment, and as best seen in FIGS. **2** and **3**, housing **102** is formed of a base or casing **123** and a cover **125** which are coupled together. Sensor **100** may be installed in tire **150** by way of a patch mount **140** attached to tire **150** as shown in FIG. **2**. Patch mount **140** incorporates a threaded rod **144** mounted to and extending from a base plate **146**. Base plate **146** is mounted to a flexible patch **148** which in turn is attached to the inside surface of tire **150**. In the illustrated embodiment, a layer of adhesive **149** attaches flexible patch **148** to tire **150**. To install sensor **100** in tire **150**, sensor **100** is positioned relative to patch mount **140** so that rod **144** is received within a corresponding threaded bore **142** extending through cover **125** of housing **102**. Sensor **100** is then screwed onto rod **144** (i.e. by rotating sensor **100** in the screw-tightening direction so as to cause rod **144** to be screwed into bore **142**). In the illustrated embodiment, rod **144** has male threads and bore **142** has corresponding female threads.

In the illustrated embodiment, base **123** of housing **102** has a cylindrical portion **124** defining a receptacle **124**A for accommodating the components of sensor **100** (as described in more detail below). Cover **125** of housing **102** has a frustoconical portion **126** defining a receptacle **126**A for accommodating a flexible membrane **114** (as described in more detail below). Base **123** of housing **102** has a flanged rim **127** extending around the periphery of an opening **124**B of cylindrical portion **124**. Cover **125** of housing **102** has a flanged rim **128** extending around the periphery of the wider end of frustoconical portion **126**. As shown in FIG. **2**, when base **123** and cover **125** are assembled to form housing **102**, flanged rims **127** and **128** are aligned with, and abut against one other. Screws, bolts or other fasteners **129** may be inserted through flanged rims **127** and **128** at peripherally spaced apart locations to couple base **123** to cover **125**. In particular embodiments, base **123** is formed of Delrin® acetal resin, and cover **125** is formed of aluminum or brass. Materials such as Delrin® acetal resin, aluminum, and brass have high gas and liquid impermeability.

In the illustrated embodiment, sensor **100**'s electronic components and circuitry include a pressure transducer **104**, a control and processing unit **105** (having a programmable controller and processor), a transmitter **106**, an antenna **107**, a battery **108**, and connecting circuitry board **109**, all located within housing **102**. More particularly, pressure transducer **104**, control and processing unit **105**, transmitter **106**, antenna **107**, battery **108** and circuitry board **109** are accommodated within receptacle **124**A of base **123** of housing **102**. Pressure transducer **104** is electronically coupled to transmitter **106** through circuitry on circuitry board **109**. In the illustrated embodiment, control and processing unit **105** is electronically coupled between pressure transducer **104** and transmitter **106**. Pressure transducer **104** generates signals (e.g. electronic analog signals) indicative of the air pressure detected by pressure transducer **104**. Such signals are processed by control and processing unit **105** and the processed signals are transmitted by transmitter **106** by way of antenna **107** to a receiver (not shown) external to tire **150**.

The signals generated by pressure transducer **104** may translate into pressure readings which are higher or lower than the actual air pressure in tire interior **152** (e.g. the signals

may be skewed). Control and processing unit **105** may be configured to process (e.g. adjust) the signals generated by pressure transducer **104** so that the processed signals translate into pressure readings which are indicative of air pressure in tire interior **152**. Such processing may be performed in accordance with a calibration curve for sensor **100**. The calibration curve may be a linear or non-linear function. Over the life span of sensor **100**, sensor **100** may be re-calibrated by adjusting or re-programming the calibration curve. For example, over time, membrane **114** (as described in more detail below) may lose its elasticity, thereby affecting the signals generated by pressure transducer **104** and requiring adjustment of the calibration curve to maintain or improve accuracy in sensor **100**'s pressure readings. Control and processing unit **105** advantageously permits the on-board calibration of sensor **100**'s pressure readings as determined from signals generated by pressure transducer **104**.

Control and processing unit **105** may comprise one or more microcontrollers, one or more microprocessors, one or more field-programmable gate arrays (FPGA), application-specific integrated circuits (ASIC), logic circuits combinations thereof or any other suitable processing unit(s) comprising hardware and/or software capable of functioning as described herein.

Battery **108** is connected to deliver electrical power to pressure transducer **104**, control and processing unit **105**, and transmitter **106**. In particular embodiments, battery **108** is a 3.6 V lithium inorganic battery. In some embodiments, more than one battery **108** is provided in sensor **100**. For example, one battery **108** may be provided to deliver electrical power to transmitter **106** and another battery **108** may be provided to deliver electrical power to pressure transducer **104** and control and processing unit **105**.

In particular embodiments, control and processing unit **105** is configured to control the transmission of signals by transmitter **106**. For example, the frequency of transmission of signals by transmitter **106** may be controlled by control and processing unit **105** to regulate power consumption of battery **108** by transmitter **106**.

A pressurized compartment **112** is contained within housing **102** and is sealingly covered by flexible membrane **114**, which is spaced apart from inside surface **103** of cover **125**. Membrane **114** is made of a flexible material which is impermeable to gases and liquids so as to protect the sensor electronic components and circuitry from corrosive gases and liquids present in tire interior **152**, as well as to maintain the pressure sensitivity of tire pressure sensor **100** (e.g. by inhibiting de-pressurization of compartment **112**). In particular embodiments, membrane **114** is made of Viton® fluoroelastomer, a fluorocarbon-based synthetic rubber.

Membrane **114** extends across, so as to completely cover, opening **124**B of cylindrical portion **124** of base **123**. In the illustrated embodiment, a peripheral portion **114**A of membrane **114** is positioned between flanged rim **127** of base **123** and flanged rim **128** of cover **125** (see FIG. **2**). Membrane **114** is secured between base **123** and cover **125** when flanged rims **127**, **128** are coupled to one another with screws **129**. Screws **129** may extend through flanged rims **127**, **128** and through peripheral portion **114**A of membrane **114**. FIG. **3** shows a plurality of screw-receiving apertures **130** defined in peripheral portion **114**A of membrane **114**. Apertures **130** may be formed by driving screws **129** through membrane **114** during assembly of sensor **100**.

At least one inlet port **110** extends through cover **125** to allow pressurized air within tire interior **152** to contact membrane **114**. In the illustrated embodiment, four inlet ports **110** extend through cover **125**. Providing a plurality of inlet ports **110** is advantageous in the event that an inlet port **110** becomes clogged with dirt or other impurities trapped within tire interior **152**.

Membrane **114** extends outwardly in a direction **118** away from an interior of compartment **112** and toward the inside surface **103** of cover **125**. The tire pressure (i.e. air pressure in tire interior **152**) determines the extension of membrane **114** in outward direction **118**, which in turn governs the air pressure in compartment **112**. The air pressure in compartment **112** is therefore indicative of tire pressure. More specifically, membrane **114** extends outwardly by a greater amount if tire pressure is relatively low (as shown by stippled line **131** representing a relatively more extended position of membrane **114** in FIG. **2**). In such a position, the air pressure in compartment **112** is relatively decreased. Membrane **114** extends outwardly by a lesser amount if tire pressure is relatively high (as shown by stippled line **132** representing a relatively less extended position of membrane **114** in FIG. **2**). In such a position, the air pressure in compartment **112** is relatively increased.

Particular embodiments of sensor **100** are capable of measuring tire pressure ranging between 13.8 kPa (2 pounds per square inch or PSI) and 1462 kPa (212 PSI) or higher (gauge). To enable this desired range of pressure sensitivity, a sufficient quantity of air or gas is contained within compartment **112** so that an outward extension of membrane **114** in direction **118** is maintained when tire pressure is between 13.8 kPa (2 PSI) and 1462 kPa (212 PSI) or higher (gauge). Membrane **114** will "bottom-out" or become flat at a threshold tire pressure (i.e. at the threshold tire pressure, membrane **114** will be compressed to a non-extended position such that any increase in tire pressure above the threshold has minimal or no effect on membrane **114**; sensor **100** thereby loses sensitivity to any increase in tire pressure above the threshold). In particular embodiments, compartment **112** contains a sufficient quantity of air or gas so that it does not bottom out until a threshold tire pressure of 1462 kPa (212 PSI) (gauge) or higher is reached.

Other embodiments of sensor **100** are capable of measuring tire pressure ranging between 13.8 kPa (2 PSI) and 1034 kPa (150 PSI) (gauge). Therefore, compartment **112** contains a sufficient quantity of air or gas so that it does not bottom out until a threshold tire pressure of 1034 kPa 150 PSI (gauge) is reached. Certain other embodiments of sensor **100** may be designed to have a different pressure sensitivity range appropriate for the kind of pneumatic tires for which the sensor is used.

As best seen in FIG. **2**, a first conduit or air passage **116** extends from pressure transducer **104** to compartment **112**. Conduit **116** allows pressurized air contained within compartment **112** to flow to pressure transducer **104**, thereby allowing pressure transducer **104** to detect the air pressure in compartment **112**. In particular embodiments, conduit **116** is a rigid or semi-rigid pipe having an 18-gauge bore (about 1.02 mm or 0.040 inch diameter).

Over an extended period, gas may diffuse through supposedly "gas-impermeable" and "liquid-impermeable" materials such as steel, aluminum, brass, and plastics such as Delrin® acetal resin. Therefore, corrosive gases within tire interior **152** may eventually diffuse through the walls of housing **102** or membrane **114** despite the "gas-impermeable" and "liquid-impermeable" characteristics of housing **102** and membrane **114**. Moreover, gas initially contained within compartment **112** may diffuse into the walls of housing **102**, the sensor electronic components and circuitry, or other components of sensor **100**, thereby decreasing the air pressure in compartment **112** (and eventually de-pressurizing compartment **112**).

Decreased air pressure in compartment **112** affects the accuracy of pressure readings and causes membrane **114** to bottom out at a lower threshold tire pressure.

To provide a barrier to gas diffusion, prolong sensor **100**'s operational life span, and maintain sensor **100**'s pressure sensitivity, sensor electronic components and circuitry are potted in epoxy **120**. Prior to pouring liquid epoxy **120**, liquid epoxy **120** is treated to remove gases from the epoxy (e.g. induced gases or other gases, which may be present from the manufacturing of the epoxy). Otherwise, gases remaining in the epoxy may result in undesirable air pockets once the epoxy is cured. According to some embodiments, liquid epoxy **120** is treated by placing the liquid epoxy in a vacuum chamber (a chamber maintained at less than atmospheric pressure). In some embodiments, the vacuum chamber is maintained at a pressure of 50 kPa (7.3 PSI) (absolute) or less. In particular embodiments, the vacuum chamber is maintained at a pressure of 7 kPa (1 PSI) (absolute) or less.

After liquid epoxy **120** has been treated to remove gases, epoxy **120** is poured into receptacle **124**A of base **123** to cover and fill any spaces surrounding the sensor electronic components and circuitry. Epoxy **120** also fills the spaces surrounding conduit **116** but does not enter conduit **116**. Once poured, epoxy **120** may further be treated by placing sensor **100** (containing epoxy **120**) in a vacuum chamber. Epoxy **120** is then cured to form a hard protective material encapsulating the sensor electronic components and circuitry. In some embodiments, cured epoxy **120** has a hardness of at least D30 durometer. In particular embodiments, cured epoxy **120** has a hardness of at least D90 durometer. Generally, the greater the hardness of epoxy **120**, the greater is its resistance to gas diffusion or gas solubility.

The hardness of epoxy **120** may render the sensor electronic components and circuitry susceptible to shearing away from circuitry board **109** due to the thermal expansion or contraction of epoxy **120** (which may result from temperature fluctuations in the vehicle tire during operation of the vehicle). Generally, the greater the hardness of epoxy **120**, the greater is the tendency that thermal expansion or contraction of epoxy **120** will lead to sensor-damaging shearing of the sensor electronic components and circuitry. In particular embodiments, to inhibit shearing, the sensor electronic components and circuitry are coated with rubber **122** (see FIGS. **2** and **3**) prior to encapsulating the sensor electronic components and circuitry in epoxy **120**. In particular embodiments, rubber spray coating is applied to surface-mount components of the sensor electronic components and circuitry (e.g. pressure transducer **104**, control and processing unit **105**, transmitter **106**, antenna **107**). Rubber coating **122** is flexible and is capable of absorbing some of the shearing stresses which would otherwise be applied to the sensor electronic components and circuitry as a result of the thermal expansion or contraction of epoxy **120**.

As seen in FIG. **2**, conduit **116** extends from compartment **112**, through epoxy **120** and rubber coating **122**, to pressure transducer **104**. Providing conduit **116** through epoxy **120** and rubber coating **122** to pressure transducer **104** advantageously allows for a protective layer of epoxy **120** to surround pressure transducer **104** and other sensor electronic components and circuitry.

Pressure transducer **104** may incorporate a diaphragm sensitive to changes in air pressure in conduit **116** and compartment **112**. The diaphragm deflects by an amount which depends on the air pressure in conduit **116** and compartment **112** which is imposed on one side of the diaphragm, relative to the pressure on the other side of the diaphragm. The deflection of the diaphragm is detected by a sensor and converted into electronic signals which are processed by control and processing unit **105** (as discussed above). The processed signals are transmitted by transmitter **106** to a receiver. In particular embodiments, pressure transducer **104** is a piezoelectric sensor. In other embodiments, pressure transducer **104** may comprise any suitable pressure transducer for detecting air pressure in conduit **116** and compartment **112**, such as a strain gage sensor, variable capacitance sensor, microelectromechanical sensor, fiber optic sensor, or the like.

A second conduit is optionally provided in the sensor to vent gas which may leak from sensor battery **108**. Sensory battery **108** may have a tendency to leak gas, given its restrictive environment (i.e. the battery is potted in epoxy **120** within housing **102**, providing little or no expansion room for the battery; also the battery operates within pressurized tire interior **152**). To protect the sensor electronic components and circuitry from the corrosive effects of leaked battery gas, the leaked gas may be vented away from such components and circuitry. For example, leaked battery gas may be carried away from the battery and the other sensor electronic components and circuitry by way of a conduit. The conduit may carry the gas to a compartment (e.g. charcoal cannister), where the gas is then trapped. In the illustrated embodiment, a second conduit or air passage **136** extends from a location proximate to battery **108** to compartment **112** (see FIG. **2**). Conduit **136** carries gas which may leak from battery **108** to compartment **112**. The leaked battery gas is trapped in compartment **112**, away from the sensor electronic components and circuitry, thereby protecting such sensor components from the potentially corrosive effects of battery gases.

Leaked battery gas that is trapped in compartment **112** increases the air pressure in compartment **112**, thereby affecting the pressure readings. However, as only a small quantity of battery gas tends to be leaked and trapped in compartment **112**, the resulting effect on pressure readings is generally negligible. At lower tire pressures (e.g. pressures below 34.5 kPa (5 PSI) (gauge)), the trapped leaked battery gas in compartment **112** results in a greater percentage error in pressure readings than at higher tire pressures (e.g. pressures above 34.5 kPa (5 PSI) (gauge)). However, at such lower tire pressures, the vehicle tire would be considered underinflated and the effects on pressure readings (even significant percentage errors) would be considered irrelevant. For example, some types of vehicle tires are considered underinflated if tire pressure is below 207 kPa (30 PSI) (gauge). Other types of vehicle tires are considered underinflated if tire pressure is below 552 kPa (80 PSI) (gauge).

One or more grooves, cavities, indentations, recesses, ridges, protrusions or the like are optionally provided on an interior surface of cylindrical portion **124** of base **123** of housing **102**. Such features increase the contacting surface area between epoxy **120** and the interior surface of cylindrical portion **124**, thereby helping epoxy **120** to be more securely retained within base **123**. For example, in the illustrated embodiment (see FIG. **2**), a circumferential groove **138** is defined in the interior surface of cylindrical portion **124**. Groove **138** provides a space which may be filled with liquid epoxy **120** to facilitate adhesion of epoxy **120** to cylindrical portion **124** once epoxy **120** has been cured.

To assemble sensor **100** according to the illustrated embodiment, sensor **100**'s electronic components and circuitry (including pressure transducer **104**, control and processing unit **105**, transmitter **106**, antenna **107**, battery **108** and connecting circuitry board **109**) may be coupled together, or provided as a pre-assembled unit (see FIG. **3**), and placed in receptacle **124**A of cylindrical portion **124** of base **123**. First conduit **116** and second conduit **136** are attached to their

respective points of attachment near or on pressure transducer **104** and battery **108**. Liquid epoxy **120** (which has been treated as described above to remove gases present in the epoxy) is poured into receptacle **124**A to fill the spaces around the sensor electronic components and circuitry, and around first conduit **116** and second conduit **136**. Once poured, epoxy **120** may be further treated as described above. Epoxy **120** is then cured.

Membrane **114** is positioned so that membrane **114** extends across, so as to completely cover, opening **124**B of cylindrical portion **124**, and peripheral portion **114**A of membrane **114** rests against flanged rim **127** of base **123**. Cover **125** is then placed over membrane **114** (on an outward side of membrane **114**) so that flanged rim **128** of cover **125** abuts against peripheral portion **114**A of membrane **114** and against flanged rim **127** of base **123**.

To pressurize compartment **112**, the mouth of a vacuum hose is placed against cover **125** to cover the openings in cover **125** (e.g. bore **142** and inlet ports **110**). The vacuum hose is operated to suction air through the openings in cover **125** so that membrane **114** is drawn in outward direction **118** (toward the vacuum hose) until membrane **114** abuts against the inside surface **103** of cover **125**. Screws **129** are then inserted through flanged rims **127**, **128** and membrane **114** to couple together base **123** and cover **125**, and to secure membrane **114** between flanged rims **127**, **128** so that membrane **114** sealingly covers compartment **112**. Compartment **112** is bounded on one side by membrane **114** and bounded on another side by epoxy **120**.

The vacuum hose is subsequently pulled away from cover **125** and membrane **114**, causing membrane **114** to retract and assume its natural outwardly extended configuration (as shown by the solid line representing membrane **114** in FIG. **2**). As there is a quantity of trapped air in compartment **112** which is forced to occupy a smaller space after membrane **114** retracts, compartment **112** becomes pressurized (i.e. pressure in compartment **112** increases relative to standard atmospheric pressure). In particular embodiments, about 3 cm^3 (0.183 in^3) of air (at standard atmospheric pressure and room temperature) becomes trapped within compartment **112** during the assembly of sensor **100** as described above. In particular embodiments, when sensor **100** is placed in an environment at standard atmospheric pressure, the pressure in compartment **112** is at 2 PSI (13.8 kPa) above standard atmospheric pressure.

Sensor **100** may be assembled at atmospheric pressure at sea level. At sea level, atmospheric pressure is near or at standard atmospheric pressure which is 101.3 kPA (14.7 PSI or 1 atm) (absolute). Variations in atmospheric pressure at sea level due to weather and other causes may contribute to variations in the quantity of trapped air within compartment **112** for each sensor **100**, which in turn affect the pressure readings obtained from pressure transducer **104**. Variations in the quantity of trapped air within compartment **112** tend to be small, as atmospheric pressure at sea level is generally within the range of about 100.7 to 102 kPa (14.6 to 14.8 PSI) (absolute). Also, percentage error in the pressure readings caused by the variation in quantity of trapped air within compartment **112** tends to be greater at lower tire pressures (e.g. below 34.5 kPa (5 PSI) (gauge)) than at higher tire pressures (e.g. above 34.5 kPa (5 PSI) (gauge)). However, at such lower tire pressures, the vehicle tire would be considered underinflated and the effects on pressure readings (even significant percentage errors) would be considered irrelevant.

In some embodiments, rather than using the vacuum hose assembly technique described above, compartment **112** may be pressurized by inserting a gas (e.g. nitrogen or carbon dioxide gas) into compartment **112** (i.e. the space bounded by or defined between membrane **114** and epoxy **120**). For example, nitrogen in liquid or gas form may be injected into compartment **112** after coupling together base **123** and cover **125** with membrane **114** therebetween.

In other embodiments, compartment **112** may be pressurized by placing a dry ice pellet (solid carbon dioxide) in cylindrical portion **124** of base **123** prior to covering opening **124**B with membrane **114**. Membrane **114** and cover **125** are then positioned over base **123**. Screws **129** are inserted through flanged rims **127**, **128** and membrane **114** to couple together base **123** and cover **125** and to form a compartment **112** between epoxy **120** and membrane **114** containing the dry ice pellet. The dry ice sublimes to carbon dioxide gas, thereby pressurizing compartment **112**.

While a number of exemplary aspects and embodiments have been discussed above, those of skill in the art will recognize certain modifications, permutations, additions and sub-combinations thereof. For example:

- A battery **108** is provided in the described embodiments to supply electrical power to pressure transducer **104** and transmitter **106**. In other embodiments, battery **108** is not necessary. For example, a supply of power external to sensor **100** may be provided to power pressure transducer **104** and transmitter **106**.
- A control and processing unit **105** is provided in the described embodiments to process the signals generated by pressure transducer **104** so that the processed signals translate into pressure readings which are indicative of air pressure in tire interior **152**. In other embodiments, control and processing unit **105** is not necessary. For example, a pressure transducer **104** may be provided that is already calibrated for the specific sensor **100** in which it is installed. In other embodiments, the signals generated by pressure transducer **104** may be transmitted by transmitter **106** to a remote processor, and processed by suitable software on the remote processor to obtain pressure readings indicative of air pressure in tire interior **152**. In yet other embodiments, the signals generated by pressure transducer **104** may be adjusted by way of capacitors, resistors and/or other circuitry electronically coupled between pressure transducer **104** and transmitter **106**.
- Instead of epoxy, the sensor electronic components and circuitry may be encapsulated in another solid or semi-solid potting material, such as urethane and the like.
- Flanged rims **127** and **128** may be coupled together by other means (e.g. clamps, etc.).
- In some embodiments, a channel, recess or the like may be provided or defined in epoxy **120** as a conduit **116** to carry pressurized air within compartment **112** to pressure transducer **104**.
- In the illustrated embodiment, housing **102** comprises a base **123** and a cover **125** which are coupled together. However, this is not necessary. In some embodiments, housing **102** may be a single molded piece. In certain embodiments, housing **102** only has a base or casing **123**, which accommodates the sensor's electronic components and circuitry. Membrane **114** may extend across an opening **124**B of base **123** and may be substantially exposed to tire interior **152**. Membrane **114** may be coupled to base **123** so as to contain a compartment **112** within base **123** which is bounded by or defined between membrane **114** and epoxy **120**. Compartment **112** may be pressurized using a suitable technique (e.g. by injecting gas into the compartment, or by placing a dry ice pellet in the compartment prior to covering opening **124**B with membrane **114**).

It is therefore intended that the following appended claims and claims hereafter introduced are interpreted to include all such modifications, permutations, additions and sub-combinations as are within their true spirit and scope.

What is claimed is:

1. A tire pressure sensor for a pneumatic tire, the tire pressure sensor comprising:

a housing;

a pressure transducer within the housing;

a transmitter within the housing electronically coupled to the pressure transducer;

one or more batteries within the housing connected to deliver electrical power to the pressure transducer and to the transmitter;

a pressurized compartment within the housing bounded at least partially by a flexible membrane, the membrane within the housing and having an outward surface spaced apart from the housing;

wherein the pressure transducer is in fluid communication with air within the compartment; and

at least one inlet port extending through the housing to allow pressurized air within the tire to contact the outward surface of the membrane;

wherein the pressure transducer, the transmitter and the one or more batteries are encased within the housing so as to prevent contact with the pressurized air within the tire.

2. A tire pressure sensor according to claim **1**, further comprising an epoxy within the housing encapsulating the pressure transducer, the transmitter and the one or more batteries.

3. A tire pressure sensor according to claim **2**, wherein the compartment is bounded by the epoxy and the membrane.

4. A tire pressure sensor according to claim **3**, further comprising a rubber coating on the pressure transducer and the transmitter, wherein the epoxy encapsulates the rubber coated pressure transducer and transmitter.

5. A tire pressure sensor according to claim **4**, further comprising a first conduit extending between the pressure transducer and the compartment wherein the first conduit extends through the rubber and the epoxy.

6. A tire pressure sensor according to claim **1**, wherein the membrane is liquid and gas-impermeable.

7. A tire pressure sensor according to claim **2**, wherein the housing comprises a cylindrically shaped base and a frustoconically shaped cover, the base comprising a receptacle for accommodating the pressure transducer, the transmitter, the one or more batteries and the compartment.

8. A tire pressure sensor according to claim **7**, further comprising one or more grooves defined in an interior surface of the base for receiving the epoxy.

9. A tire pressure sensor according to claim **2**, wherein the epoxy is pretreated by placing the epoxy in a vacuum chamber.

10. A tire pressure sensor according to claim **9**, wherein the epoxy has a hardness of at least D30 durometer.

11. A tire pressure sensor according to claim **9**, wherein the epoxy has a hardness of at least D90 durometer.

12. A tire pressure sensor according to claim **5**, further comprising a second conduit extending through the epoxy, proximate to at least one of the one or more batteries, for carrying gas vented by the battery away from the battery.

13. A tire pressure sensor according to claim **12**, wherein the second conduit carries gas vented by the battery into the compartment.

14. A tire pressure sensor according to claim **1**, wherein the tire pressure sensor is responsive to and produces output signals corresponding to tire pressures ranging between 13.8 kPa (2 PSI) and 1462 kPa (212 PSI) (gauge).

15. A tire pressure sensor according to claim **1**, further comprising a control and processing unit electronically coupled between the pressure transducer and the transmitter, the control and processing unit configured to process signals generated by the pressure transducer in accordance with a calibration curve.

16. A method of detecting air pressure within a pneumatic tire, the method comprising:

providing a tire pressure sensor comprising:

a housing;

a pressure transducer within the housing;

a transmitter within the housing electronically coupled to the pressure transducer for transmitting output signals corresponding to the air pressure within the tire;

one or more batteries within the housing connected to deliver electrical power to the pressure transducer and to the transmitter;

a pressurized compartment within the housing bounded at least partially by a flexible membrane, the membrane within the housing and having an outward surface spaced apart from the housing;

wherein the pressure transducer is in communication with air within the compartment; and

at least one inlet port extending through the housing to allow pressurized air within the tire to contact the outward surface of the membrane;

wherein the pressure transducer, the transmitter and the one or more batteries are encased within the housing so as to prevent contact with the pressurized air within the tire;

positioning the tire pressure sensor in the tire so that the inlet port is in communication with pressurized air within the tire; and

receiving the signals transmitted by the transmitter.

17. A tire pressure sensor for a pneumatic tire, the tire pressure sensor comprising:

a housing having an opening thereto;

a pressure transducer within the housing;

a transmitter within the housing electronically coupled to the pressure transducer;

one or more batteries within the housing connected to deliver electrical power to the pressure transducer and to the transmitter;

a flexible membrane covering the opening;

a pressurized compartment within the housing bounded at least partially by the membrane; and

wherein the pressure transducer is in communication with air within the compartment;

wherein the pressure transducer, the transmitter and the one or more batteries are encased within the housing so as to prevent contact with the pressurized air within the tire.

18. A tire pressure sensor according to claim **17**, further comprising an epoxy within the housing encapsulating the pressure transducer, the transmitter and the one or more batteries.

19. A tire pressure sensor according to claim **18**, wherein the compartment is bounded by the epoxy and the membrane.

20. A tire pressure sensor according to claim **19**, further comprising a rubber coating on the pressure transducer and transmitter, wherein the epoxy encapsulates the rubber coated pressure transducer and transmitter.

* * * * *