UNITED STATES PATENT AND TRADEMARK OFFICE

BEFORE THE PATENT TRIAL AND APPEAL BOARD

SPORTRADAR AG,
Petitioner

v.

SPORTSCASTR INC.,
(D/B/A PANDA INTERACTIVE),
Patent Owner.

IPR2025-00635
U.S. Patent No. 11,871,088

PETITION FOR *INTER PARTES* REVIEW UNDER 37 C.F.R. §42.101

TABLE OF CONTENTS

I. INTRODUCTION 1

II. MANDATORY NOTICES 2

A. Real Parties-in-Interest 2

B. Related Matters 2

C. Counsel and Service Information 2

D. Fee Payment 3

III. REQUIREMENTS FOR IPR UNDER 37 C.F.R. §42.104 3

A. Grounds for Standing 3

B. Identification of Challenge and Relief Requested 3

1. Claims for Which IPR Is Requested 3

2. Grounds for Challenge 3

3. Claim Construction 5

4. How the Claims Are Unpatentable 5

5. Evidence Supporting This Challenge 5

IV. TECHNOLOGY BACKGROUND: PROTOCOLS FOR REAL-TIME OR LOW-LATENCY DATA TRANSMISSION 6

A. HTTP Polling 6

B. WebSocket 7

C. Webserver 7

V. THE '088 8

A. Alleged Problem 8

B. Alleged Invention 8

C. Prosecution History 12

VI. LEVEL OF ORDINARY SKILL IN THE ART 12

VII. OVERVIEW OF THE PRIMARY REFERENCES 13

A. Ellis 13

B. Herzog 14

VIII. THE CHALLENGED CLAIMS ARE UNPATENTABLE 17

A. Ground 1A: Claims 8, 11, and 12 Are Obvious Over Ellis in View of Spivey 17

1. Motivation to Combine 17

2. Independent Claim 8 22

3. Dependent Claim 11 35

4. Dependent Claim 12 36

B. Ground 1B: Claims 9, 10, and 13-23 Are Obvious Over Ellis in View of Spivey and Abulikemu 36

1. Motivation to Combine 36

2. Dependent Claim 9 39

3. Dependent Claim 10 40

4. Independent Claim 13 43

5. Dependent Claim 14 45

6. Dependent Claim 15 46

7. Dependent Claim 16 46

8. Dependent Claim 17 46

9. Dependent Claim 18 46

10. Dependent Claim 19 46

11. Dependent Claim 20 47

12. Dependent Claim 21 47

13. Dependent Claim 22 47

14. Dependent Claim 23 48

C. Ground 2A: Claims 8, 11, and 12 Are Obvious Over Herzog in View of Spivey 48

1. Motivation to Combine 48

2. Independent Claim 8 51

3. Dependent Claim 11 70

4. Dependent Claim 12 70

D. Ground 2B: Claims 9, 10, and 13-23 Are Obvious Over Herzog in View of Spivey and Abulikemu 71

1. Motivation to Combine 71

2. Dependent Claim 9.....74

3. Dependent Claim 10 75

4. Independent Claim 13 77

5. Dependent Claim 14 78

6. Dependent Claim 15 79

7. Dependent Claim 16 79

8. Dependent Claim 17 79

9. Dependent Claim 18 79

10. Dependent Claim 19 79

11. Dependent Claim 20 80

12. Dependent Claim 21 80

13. Dependent Claim 22 80

14. Dependent Claim 23 81

IX. SECONDARY CONSIDERATIONS OF NON-OBVIOUSNESS.....81

X. THE BOARD SHOULD NOT EXERCISE DISCRETIONARY DENIAL.....81

A. *General Plastic*.....81

B. *Fintiv*.....82

C. *Advanced Bionics* 83

1. The Examiner Did Not Properly Consider Ellis During Prosecution.....83

2. The Examiner Erred in Failing to Consider Ellis in Combination with Other Prior Art 84

XI. CONCLUSION 85

*All emphases and coloring added, unless otherwise noted.

TABLE OF AUTHORITIES

Page(s)

Cases

Advanced Bionics, LLC v. Med-El Elekromedizinische Geräte GMBH,
IPR2019-01469, Paper 6 (PTAB Feb. 13, 2020).....83, 84

Apple Inc. v. Fintiv, Inc.,
IPR2020-00019, Paper 11 (PTAB Mar. 20, 2020).....82

Apple Inc. v. Uniloc 2017 LLC,
IPR2018-00580, Paper 13 (PTAB Aug. 21, 2018).....1

Becton, Dickinson and Co. v. B. Braun Melsungen AG,
IPR2017-01586, Paper 8 (PTAB Dec. 15, 2017).....83

General Plastic Indus. Co. v. Canon Kubushiki Kaisha,
IPR2016-01357, Paper 19 (PTAB Sept. 6, 2017).....82

Geo. M. Martin Co. v. Alliance Machine Sys. Int'l. LLC,
618 F.3d 1294 (Fed. Cir. 2010).....81

Sotera Wireless, Inc. v. Masimo Corp.,
IPR2020-01019, Paper 12 (PTAB Dec. 1, 2020).....82

Videndum Production Solutions, Inc. v. Rotolight Limited,
IPR2023-01218, Paper 12 (PTAB April 19, 2024).....81

Statutes

35 U.S.C. §102(a).....4

35 U.S.C. §103.....5

35 U.S.C. §112.....44

35 U.S.C. §314(a).....81, 82

Other Authorities

37 C.F.R. §42.10(b) 3

37 C.F.R. §42.104 3

37 C.F.R. §42.108(a).....81

37 C.F.R. §42.222(b) 1

37 C.F.R. §1.104(e).....12

I. INTRODUCTION

Sportradar AG ("Petitioner") requests *inter partes* review of claims 8-23 of U.S. Patent No. 11,871,088 (Exhibit 1012, "'088"). This petition presents the same art and the same grounds and relies on substantively the same declaratory evidence (albeit offered by a different expert), as co-pending IPR2024-00252, filed December 6, 2024 by Genius Sports Ltd. ("Genius"). Petitioner expects an institution decision by June 30, 2025. If instituted, Petitioner will file a motion under 37 C.F.R. §42.222(b) to join IPR2025-00252. If Genius' petition is withdrawn prior to the Board's institution decision, however, Petitioner intends to rely on the instant petition as grounds for seeking *inter partes* review of '088. Petitioner has spoken with counsel of record for Genius, and Genius does not oppose joinder to the '088 petition in the event it is instituted. In that case, Petitioner will also agree to assume a "passive understudy role," and, as such, the *General Plastic* factors would be "effectively neutraliz[ed]." *See Apple Inc. v. Uniloc 2017 LLC*, IPR2018-00580, Paper 13 at 10 (PTAB Aug. 21, 2018). As a result, the instant "copycat" petition does not present any additional complexity or require any additional effort by the Patent Owner or the Board, and, therefore, should be granted along with the '00252 Petition.

II. MANDATORY NOTICES

A. Real Parties-in-Interest

Sportradar AG, Sportradar Group AG, Sportradar Solutions LLC and Sportradar US LLC are the real parties-in-interest.

B. Related Matters

PO has asserted the '088 against Petitioner in *SportsCastr Inc. v. Sportradar Group, AG.*, No. 2:23-cv-04772-JRG (E.D. Tex.). PO has also asserted the '088 against Genius in *SportsCastr Inc. v. Genius Sports Ltd.*, No. 2:23-cv-04771-JRG (E.D. Tex.). Ex.1059. Both cases ("Texas Litigation") were filed October 5, 2023. This case may affect, or be affected by, the Texas Litigation.

Petitioner previously filed six IPR petitions, for three other patents similar to the '088 (U.S. Patent Nos. 10,805,687; 10,425,697; and 11,039,218). Petitioner now files two contemporaneous IPR petitions for the '088.[1]

C. Counsel and Service Information

Lead Counsel	Backup Counsel
Scott W. Cummings Reg. No. 41,567 scott.cummings@bclplaw.com BRYAN CAVE LEIGHTON PAISNER LLP 1155 F St, N.W. Washington, D.C. 20004 Telephone: (202) 508-6000	Alexander Walden provisionally recognized PTAB attorney under 37 C.F.R. §42.10 (*pro hac vice* affidavit to follow) alexander.walden@bclplaw.com Frank Fabiani Reg. No. 75,934 frank.fabiani@bclplaw.com

[1] PO originally asserted the '687, '697 and '218 in the Texas Litigation. Ex. 1014.

	BRYAN CAVE LEIGHTON PAISNER LLP 1290 Avenue of the Americas New York, NY 1104 Telephone: (212) 541-2000 Facsimile: (212) 541-4630

A Power of Attorney accompanies this Petition pursuant to 37 C.F.R. §42.10(b). Petitioner consents to electronic service by email at scott.cummings@bclplaw.com, alexander.walden@bclplaw.com, frank.fabiani@bclplaw.com, and SportradarIPR@bclplaw.com.

D. Fee Payment

Petitioner authorizes the U.S. Patent Office ("USPTO") to charge the filing fee and any other necessary fees to Deposit Account No. 02-4467.

III. REQUIREMENTS FOR IPR UNDER 37 C.F.R. §42.104

A. Grounds for Standing

Petitioner certifies the '088 is available for IPR and that Petitioner is not barred or estopped from requesting IPR on the grounds identified herein.

B. Identification of Challenge and Relief Requested

1. Claims for Which IPR Is Requested

Petitioner challenges claims 8-23 of the '088.

2. Grounds for Challenge

Petitioner challenges the claims based on the following references:

1. U.S. Patent Pub. No. ("PGPub") 2014/0229992 to Ellis et al. ("Ellis"), filed April 22, 2014, published August 14, 2014, is prior art under §102(a).[2]

2. U.S. PGPub 2016/0036910 to Spivey ("Spivey"), filed August 4, 2014, published February 4, 2016, is prior art under §102(a). Spivey was not before the USPTO during the '088's prosecution.

3. U.S. PGPub 2018/0367820 to Abulikemu ("Abulikemu"), filed December 8, 2015, published December 20, 2018, is prior art under §102(a). Abulikemu was not before the USPTO during the '088's prosecution.

4. U.S. PGPub 2015/0163379 to Herzog ("Herzog"), filed December 11, 2013, published June 11, 2015, is prior art under §102(a). Herzog was not before the USPTO during the '088's prosecution.

Petitioner requests IPR on the following grounds:

---

[2] Ellis is a continuation of U.S. PGPub 2008/0062318 ("Ellis '318"). Beyond the Examiner signing an Information Disclosure Sheet ("IDS") listing Ellis '318 as one of 80 references, the Examiner did not substantively address Ellis '318 in any correspondence, nor cite it in any rejection, prior to issuing a Notice of Allowance. *See* §X.C.1, *infra*.

Ground	Basis	Claims	References
1A	§103	8, 11, 12	Ellis in view of Spivey
1B	§103	9, 10, 13-23	Ellis in view of Spivey and Abulikemu
2A	§103	8, 11, 12	Herzog in view of Spivey
2B	§103	9, 10, 13-23	Herzog in view of Spivey and Abulikemu

3. Claim Construction

The claim terms of the ’088 should be given their plain and ordinary meaning as understood by a person of skill in the art (“POSA”). The constructions proposed herein are not a concession as to the proper scope or construction of any term in litigation nor a waiver of any claim construction argument in litigation, or that claim terms in the ’088 are indefinite or otherwise invalid or unpatentable. Petitioner reserves the right to respond to any of PO’s constructions.

4. How the Claims Are Unpatentable

Section VIII, *infra*, explains how the Challenged Claims are unpatentable.

5. Evidence Supporting This Challenge

A list of exhibits is provided at the end of the Petition. The relevance of this evidence and the specific portions supporting the challenge are provided, *e.g.*, in

Section VIII, *infra*. Petitioner submits a declaration of Dr. Omid Kia Ph.D., Ex.1001, in support of this Petition. The testimony and opinions in Dr. Kia's declaration are substantively the same as those in the declaration of Dr. Wicker submitted in support of IPR2025-00252 filed by Genius (attached hereto as Ex.1060). *See generally* Ex.1061 (comparison of Ex.1001 and Ex.1060). Petitioner relies on the entirety of Ex.1001 in support of this Petition and in response to any arguments raised by PO.

IV. TECHNOLOGY BACKGROUND: PROTOCOLS FOR REAL-TIME OR LOW-LATENCY DATA TRANSMISSION

The Transmission Control Protocol (TCP) and the Internet Protocol (IP), important elements of the suite of protocols known as "TCP/IP," aim to ensure reliable, low-latency, end-to-end data transmission between network-connected devices by dividing transmissions into "packets" and specifying rules for transmitting, routing, and receiving packetized messages. Latency, as it relates to live streaming, is the time delay between when an event occurs and when the distributed content related to that event, *e.g.*, video, audio, or other data, is displayed on a user device. Before the '088, developers and standards development organizations had built on top of TCP/IP or created additional protocols to facilitate real-time transport of video and other data over the Internet. Ex.1001 ¶¶40-62.

A. HTTP Polling

HTTP is a protocol that is a member of the TCP/IP protocol suite. HTTPS is a secure version of HTTP that uses encryption and verification to protect data. HTTP

polling consists of a sequence of request-response messages between a client and a server. Upon receiving a request, the server responds with a new message, if there is one, or with an empty response if no new message is available for that client. After a short time Δ, called the polling interval, the client polls the server again to see if any new messages are available. Various real-time applications including chat, online games, and text messaging used HTTP polling in the 2017 timeframe. Ex.1001 ¶¶55-56.

B. WebSocket

WebSocket was a known alternative to HTTP polling in the 2016 timeframe. It is a client-server communication protocol that is bi-directional, full-duplex, and continuous. Real-time web applications commonly feature WebSocket connections to facilitate a persistent stream of data from a backend server to the end client. Once a WebSocket connection is established between a server and a client, the client receives instant updates from the server without the need to poll. Ex.1001 ¶¶57-58, 63-64.

C. Webserver

Webservers are one of "the four key components of the Web," along with HTML, HTTP, and browsers, and have been widely available since at least 1993. Ex.1001 ¶¶49-53 (citing Ex.1052, 64, 99). Webservers facilitate communication

between clients and servers. *Id.* ¶¶49-53, 127-134. Use of webservers specifically between client devices, media sources, and socket servers, was also well-known. *Id.*

V. THE '088

The '088 issued from Application 17/833,188 ("'188 Application"), which was filed June 6, 2022. Ex.1012. The '188 Application claims priority to Provisional Application 62/507,158, which was filed May 16, 2017. *Id.*, 1:10-42.

Because the application was filed after March 16, 2013, its patentability is governed by the AIA.

A. Alleged Problem

According to the '088, prior art techniques for streaming video to multiple users suffered from a latency problem resulting in delay between generation of a video and the time in which a user would receive the video stream. Ex.1012, 2:27-47, 5:19-28; Ex.1001 ¶67.

B. Alleged Invention

The '088 purports to solve this latency issue. Ex.1012, 5:19-28; Ex.1001 ¶¶68-77. The '088 is directed to a "server and memory storage architecture" for obtaining, and providing to viewers, (1) an "audio and/or visual feed" including "commentary associated with [a]… live event" and (2) a "separate event data feed including real time information associated with the … live event." Ex.1012, 2:65-3:11; *see also id.*, 7:50-8:4, Figs. 2, 28. In some embodiments, as a viewer watches the displayed video, they provide their video-based commentary based on the video. *Id.*, 55:1-20, Fig. 28.

The viewer's client device creates a composite outgoing stream of the video and the viewer's commentary and transmits that stream to a media server, from which other users can receive copies. *Id*.

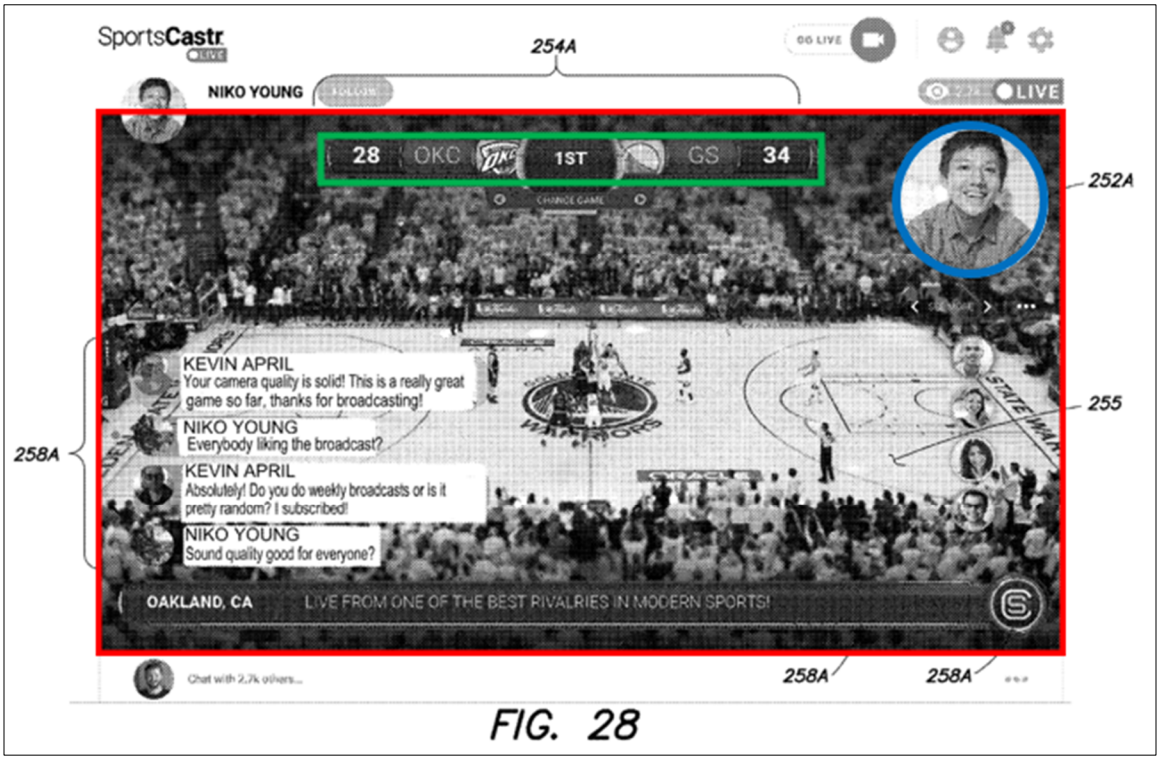

FIG. 28

Id., Fig. 28.

A block diagram of the system is shown in Figure 2, which depicts viewer client devices ("VCDs"), media sources, a control server, a socket server, event sockets, a web server, an event information provider, and a memory system.

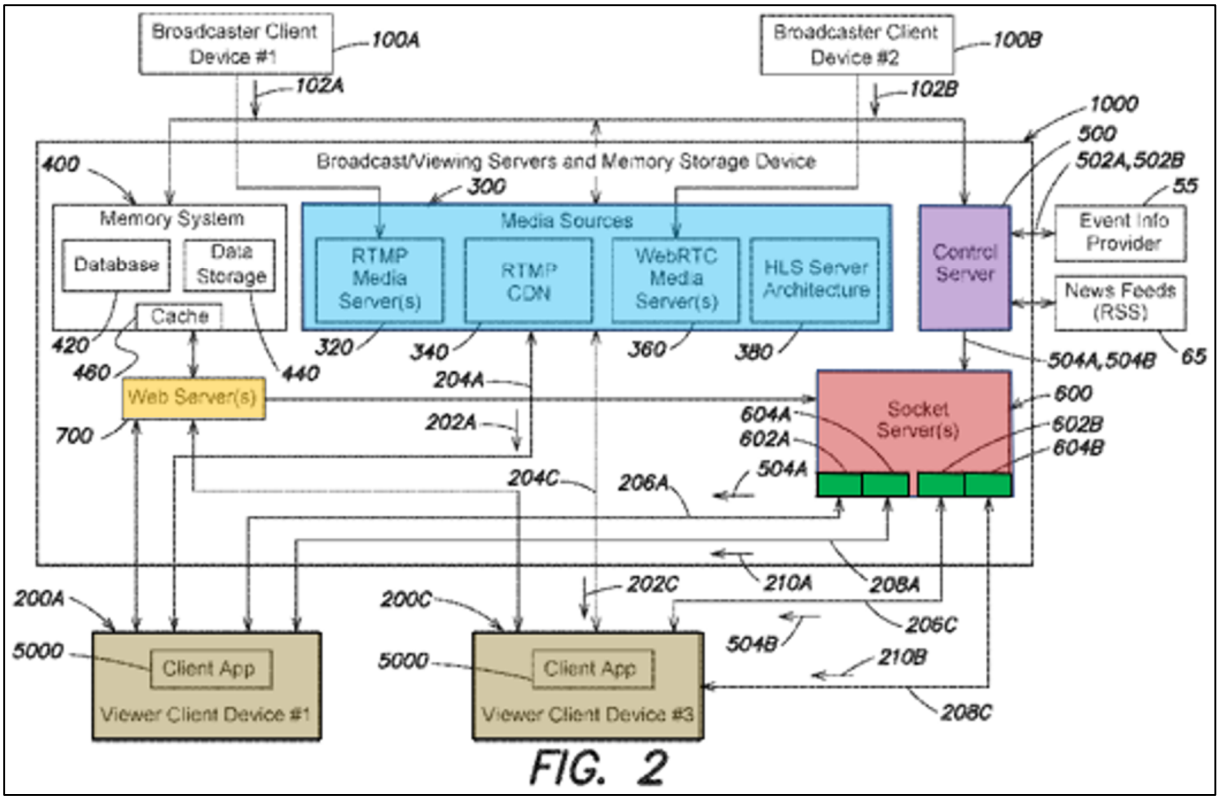

Id., Fig. 2.

Media Sources. The ’088 describes media sources as generic “computer servers.” *Id.*, 18:55-61, 65:15-25. Although in some implementations the media sources may include media servers directed to specific known protocols, such as RTMP, WebRTC, and HLS, the media sources’ purpose is to “receive a live stream of video-based commentary from a given broadcaster client device and provide copies of the live stream of video-based commentary to one or more [VCDs].” *Id.*

Control Server. The ’088 describes a control server as a generic server that retrieves “event information” from an “event information provider” to pass to the socket server, discussed below. *Id.*, 19:22-29, 21:18-33. The event information is “germane to” a particular “live sporting event.” *Id.*, 21:18-33.

Webserver. The webserver is a generic server designed to facilitate communications "between the servers/memory storage devices [] and one or more mobile broadcaster/viewer client device executing the client app." Ex.1012, 18:26-35. According to the '088, "much of the instructive communication between the client devices and the servers/memory storage devices [] occurs via the web server(s)." *Id.*, 18:35-38. The webserver also facilitates communications "to and from web-based client devices (that access the web server(s) via a web portal at a particular URL)." *Id.,* 18:33-35.

Socket Server(s). The '088 describes socket server(s) as generic servers. *Id.,* 65:15-25. The socket server's purpose is to "facilitate communication" of "synchronized event information retrieved by the control server" between the control server and the VCDs. *Id.,* 19:48-59. The socket server uses "one or more sockets … dedicated to the particular event" allowing VCDs "to establish an event information channel with the socket server." *Id.,* 19:53-59. The socket server then shares event information in "event messages" via the event information channel "in a synchronized manner" to all viewers "following the particular event." *Id.* The socket server may facilitate communication of "chat messages" in a similar manner. *Id.,* 19:58-20:42.

Although the '088 claims that the foregoing server architecture and its functionality are "inventive," as explained in more detail herein, the prior art

discloses or renders obvious every limitation of at least one of the Challenged Claims. *See* §VIII, *infra*.

C. Prosecution History

The Examiner issued a notice of allowance without issuing a single prior art rejection. *See* Ex.1049, 822-840. The '088 file history does not substantiate the Examiner's assertion that "Applicant's replies make evident the reasons for allowance, satisfying the 'record as a whole' proviso of the rule 37 CFR 1.104(e)." *Id.*, 838-840. The record contains no comparison or mapping of the allowed claims against the prior art. Rather, the record merely shows that the Applicant canceled its sole original claim, which was subject to a double patenting rejection, and added 45 new claims including 4 independent claims. *Id.*, 786-799, 805-807. The subsequent Examiner Interview Summary sheds no light on the reasons for allowance of the newly added claims. *Id.*, 841. The Examiner indicated that a subset of the claims were allowable, canceled another subset, and added additional allowable claims without explanation, *id.*, 822-840.

VI. LEVEL OF ORDINARY SKILL IN THE ART

A POSA in the field of computer networking at the time of the alleged invention, May 16, 2017, would have had at least a bachelor's degree, or equivalent, in electrical engineering, computer engineering, computer science, or a related field or an equivalent number of years of working experience, and one to two years of

experience in networking environments, including at least some experience with live-streaming network architecture. Ex.1001 ¶¶78-82. Additional education or experience in related fields could compensate for deficits in the above qualifications. *Id.*

VII. OVERVIEW OF THE PRIMARY REFERENCES

A. Ellis

Ellis identified the need for current delivery systems to provide "a custom set of features and functionality for specific types of media content, such as sporting events …." Ex.1016 ¶4. Ellis explained that the current systems "fail to take full advantage of today's high-end user equipment devices." *Id.* ¶5. To solve the above problems, Ellis discloses broadcasting systems and methods for "enhanced sports-related media content access and display." *Id.*, Abstract.

Figure 1 is an illustrative media system:

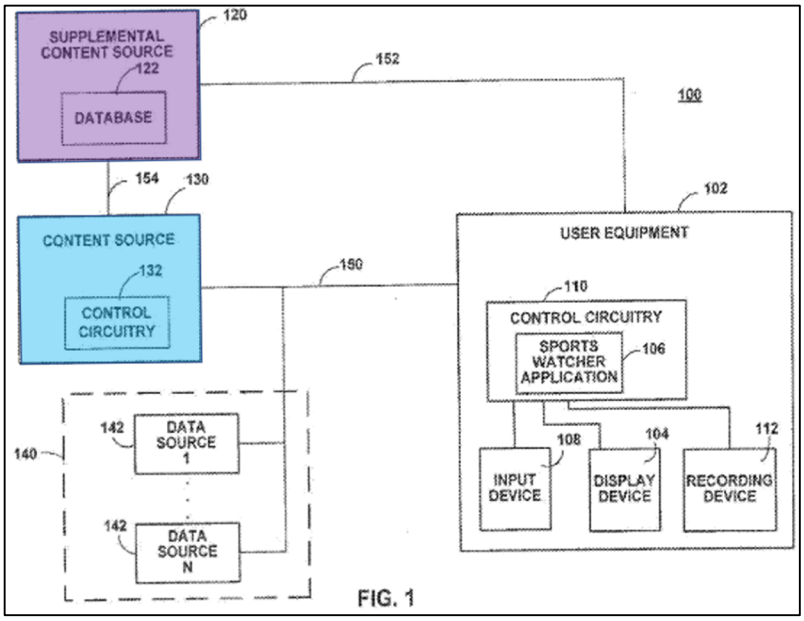

FIG. 1

Id. ¶15, Fig. 1. As depicted, Ellis's system contains a content source, a supplemental content source ("SCS"), data sources, user equipment, and a sports watcher application. *Id.*, Fig. 1.

While the system provides the video feed over communication path 150, the SCS further provides real-time information over a separate communication path 152. *Id.* ¶¶41-42, Fig. 1. Importantly, "in some embodiments, this sports-related information is provided to user equipment 102 as a plurality of real-time data feeds" where each "data feed may be individually accessed or subscribed to …." *Id.* ¶41. The SCS communication path 152 is protocol agnostic.

B. Herzog

According to Herzog, it "may be desirable to provide a mobile device, such as a tablet" with a "video that is streamed live from the Internet to a client player using" HLS while also providing "additional information related to the HLS video," such as meta-data. Ex.1015 ¶3.

Herzog uses an "Indianapolis Car Race" as a primary example to explain how its system transmits live "video, audio, and metadata … from a sports venue via different communication paths," to a client device. *Id.* ¶16. Figure 4, shown below, depicts an illustrative streaming network:

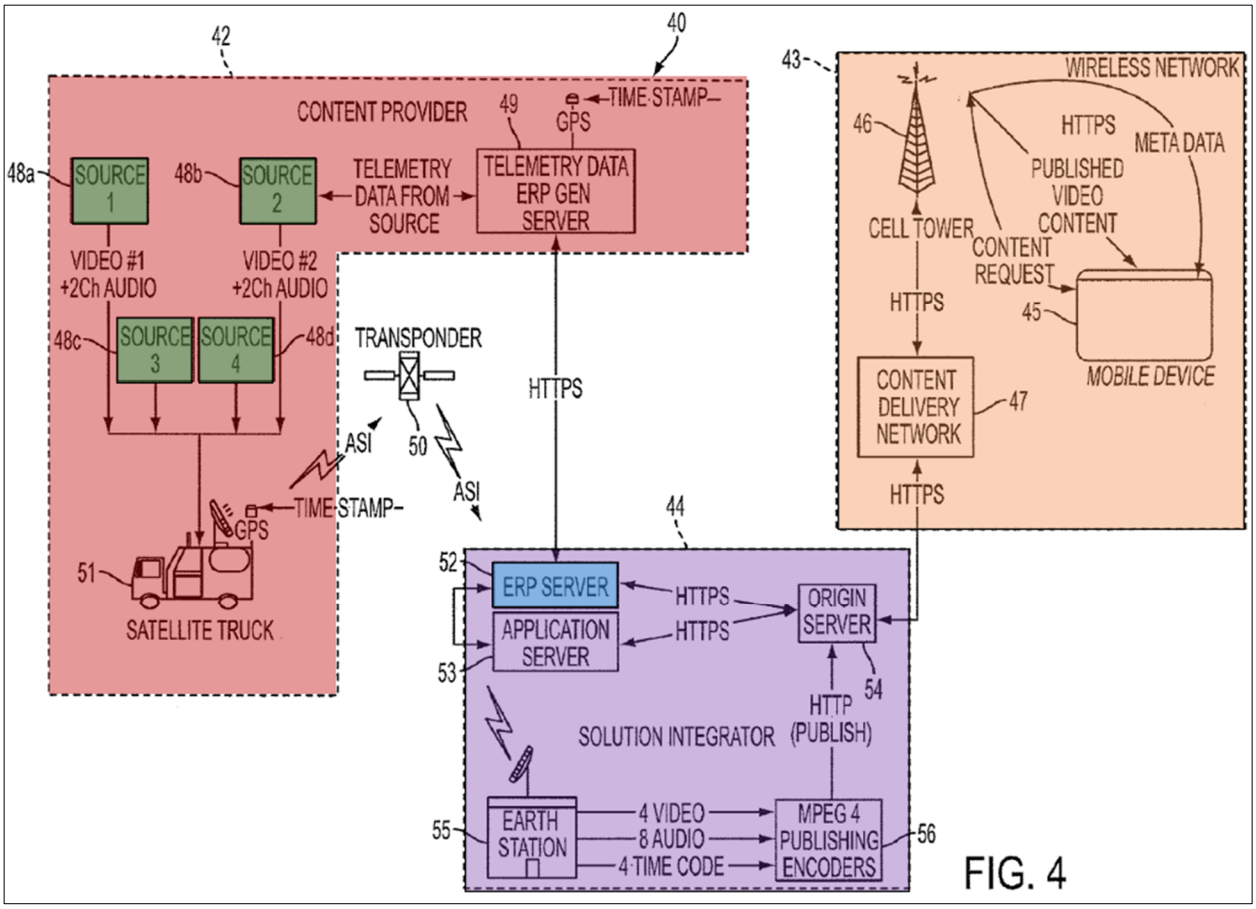

Id., Fig. 4. Herzog's Figure 4 shows a content provider, a solutions integrator, and a wireless network. *Id.* ¶¶43, 45. The content provider "is configured to provide video and audio data of an event occurring in real time and provide telemetry data (meta-data) including several parameters changing during the event." *Id.* ¶45. Video and audio data includes "multiple video/audio streams of race cars and drivers, as they are imaged at different locations on the race track." *Id.* Figure 4 shows "four video/audio streams provided from four different imaging sources, namely sources 48a-48d." *Id.* ¶46. These channels are transmitted to an Enhanced Result Protocol (ERP) generator server configured to provide telemetry data in HTTPS format to the

solutions integrator. *Id.* ¶47. The solutions integrator is depicted in further detail below in Figure 6:

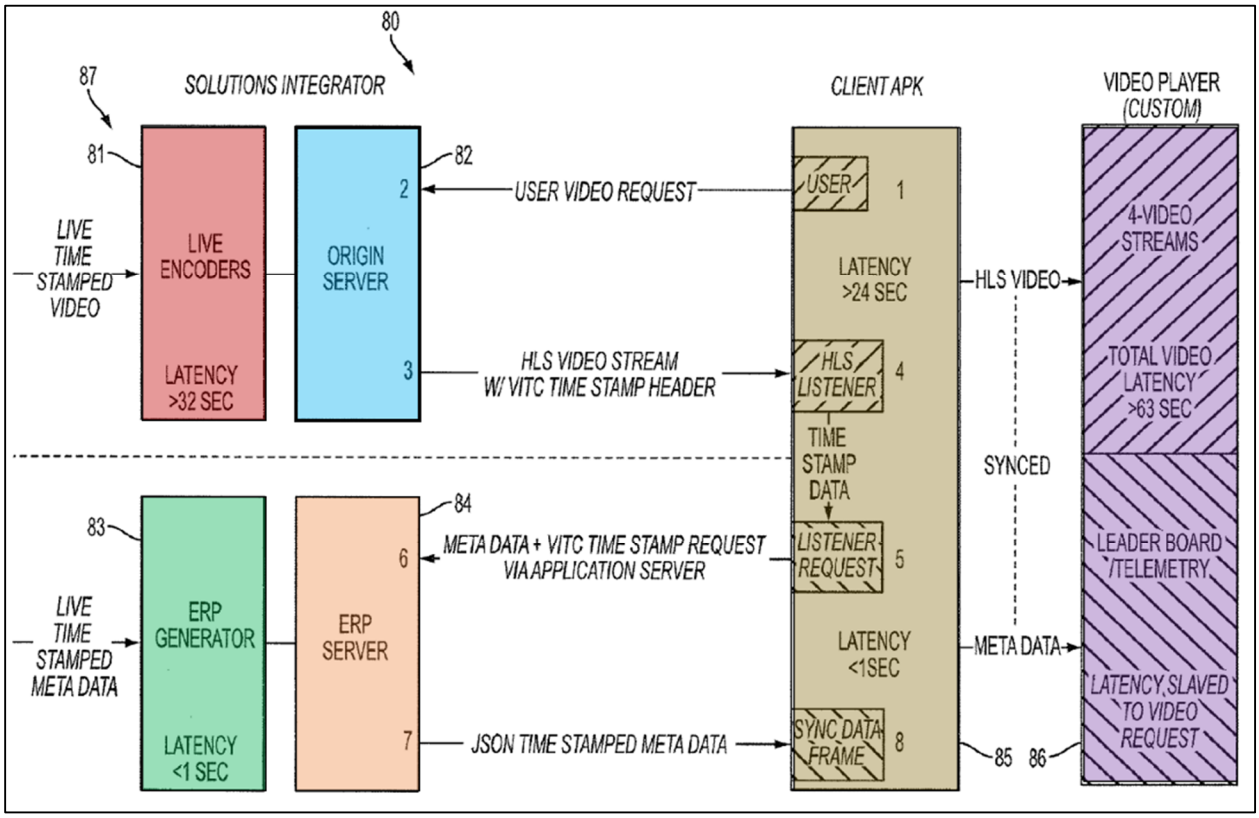

Id., Fig. 6. Once live encoders receive "time stamped video/audio data and convert the same into an MPEG stream with a VITC time stamp header," they then send the data to an origin server to "publish[] the data as an HLS video stream with a VITC time stamp header." *Id.* ¶67. In parallel, the ERP generator extracts various parameters from the live time stamped meta-data (*e.g.*, the status of each car and driver in a race), then sends those parameters to the ERP server for publishing "in an HTTPS communications format." *Id.*

VIII. THE CHALLENGED CLAIMS ARE UNPATENTABLE

A. Ground 1A: Claims 8, 11, and 12 Are Obvious Over Ellis in View of Spivey

1. Motivation to Combine

a. Socket Server

Ellis discloses the '088's broad functionality. Specifically, Ellis's two-part delivery method/system comprises transmitting a video stream originated by a content source (*i.e.*, "media source") over communication path 150 and transmitting a data stream originated by a SCS over a separate communication path 152, as shown below:

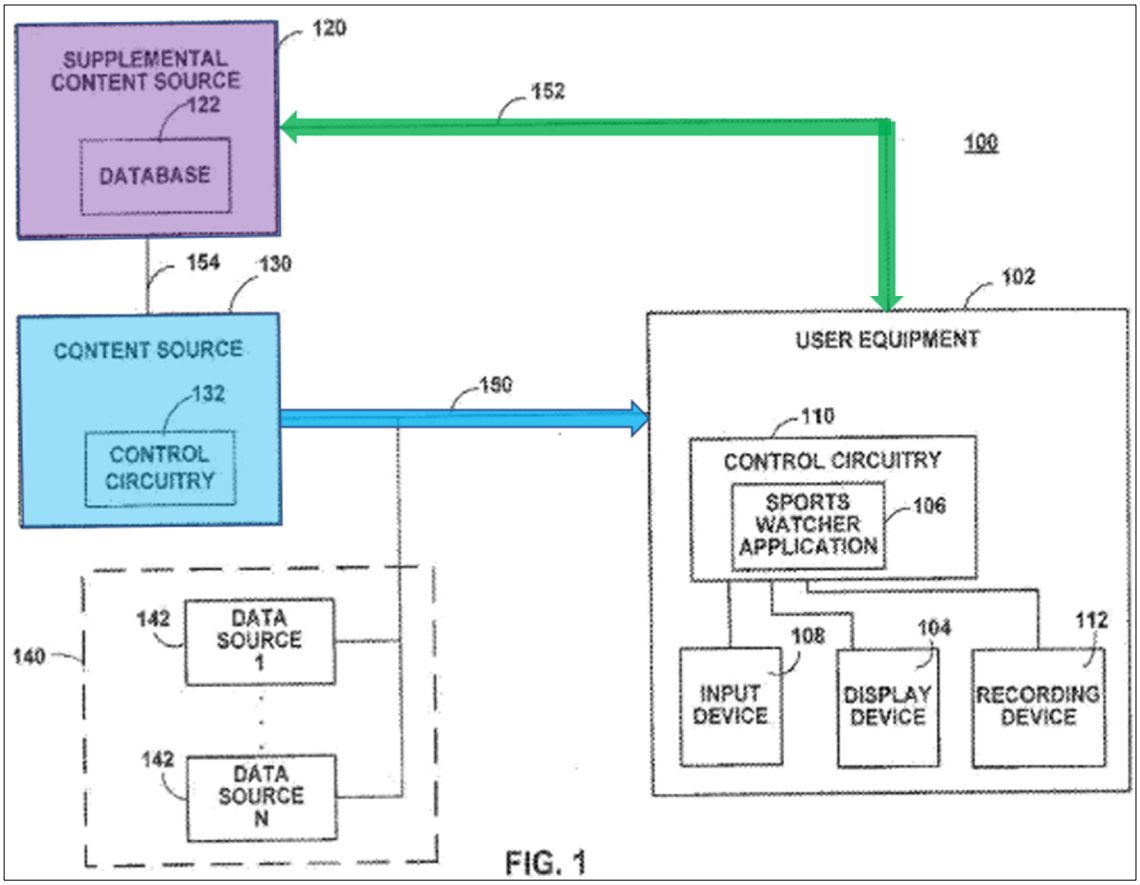

Ex.1016, Fig. 1; Ex.1001 ¶117. Ellis teaches that the SCS "may be any suitable content source" that provides live data feeds containing "score, play, and up-to-date game summary information to user equipment." Ex.1016 ¶¶41, 155.

Although Ellis discloses the claimed functionality of delivering live video and real-time supplemental content data over separate channels, Ellis does not explicitly disclose some of the '088's backend architecture/process flows for delivering the supplemental content data. Specifically, Ellis does not disclose transmitting the supplemental content data to VCDs via a socket server. However, a POSA would have found it obvious to implement Ellis's SCS as a websocket server, as taught by Spivey, to achieve full-duplex communications between a client and a remote host with low latency. Ex.1001 ¶¶117-119 (citing Ex.1046).

A POSA would have understood that socket servers were well-known components for implementing real-time data delivery, such as in Ellis, with reduced latency. Ex.1001 ¶¶118-120; §IV, *supra*; Ex.1017 ¶¶96 (describing pushing a data payload from the message queue server device, *i.e.*, a socket server, to the VCD "with a time delay of 100 milliseconds or less"); 35 (broadly describing a message queue server as "one or more electronic devices capable of receiving, processing and sending information for the system," including a wide range of exemplary devices). For example, a POSA would have appreciated Spivey's teaching that network components—specifically the Live Data Server Device (LDSD) (*i.e.*, "control

server") and Message Queue Server Device (MQSD) (*i.e.,* "socket server")—are useful in a data delivery system because they help dramatically reduce latency. Ex.1017 ¶¶28 (system designed to reduce delay "to an order of milliseconds"); 43 (VCD may request and participate in a websocket connection); 96 (pushing digital content to a VCD "substantially simultaneously . . . e.g.[,] with a time delay of 100 milliseconds or less . . . .") Ex.1001 ¶120. A POSA would have also appreciated the benefits associated with the websocket connection that Spivey's socket server makes to communicate with VCDs, (Ex.1017 ¶¶43, 61, 74, 92), including convenient and efficient full-duplex communications between a client and a remote host with low latency. Ex.1001 ¶¶120-121 (citing Ex.1046); §IV.B. Thus, a POSA would have been motivated to integrate Spivey's LDSD and MQSD into Ellis's data delivery system to reduce latency to a time period "at least two orders of magnitude shorter than conventional time periods of legacy devices," as taught by Spivey and to obtain additional benefits associated with websocket communications. Ex.1017 ¶96; Ex.1001 ¶¶120-121.

A POSA would have done so by implementing Ellis's SCS using Spivey's LDSD (*i.e.*, "control server") and adding Spivey's MQSD (*i.e.*, "socket server"), as illustrated below in the annotated, combined flow chart of Ellis Figure 1 and Spivey Figure 4:

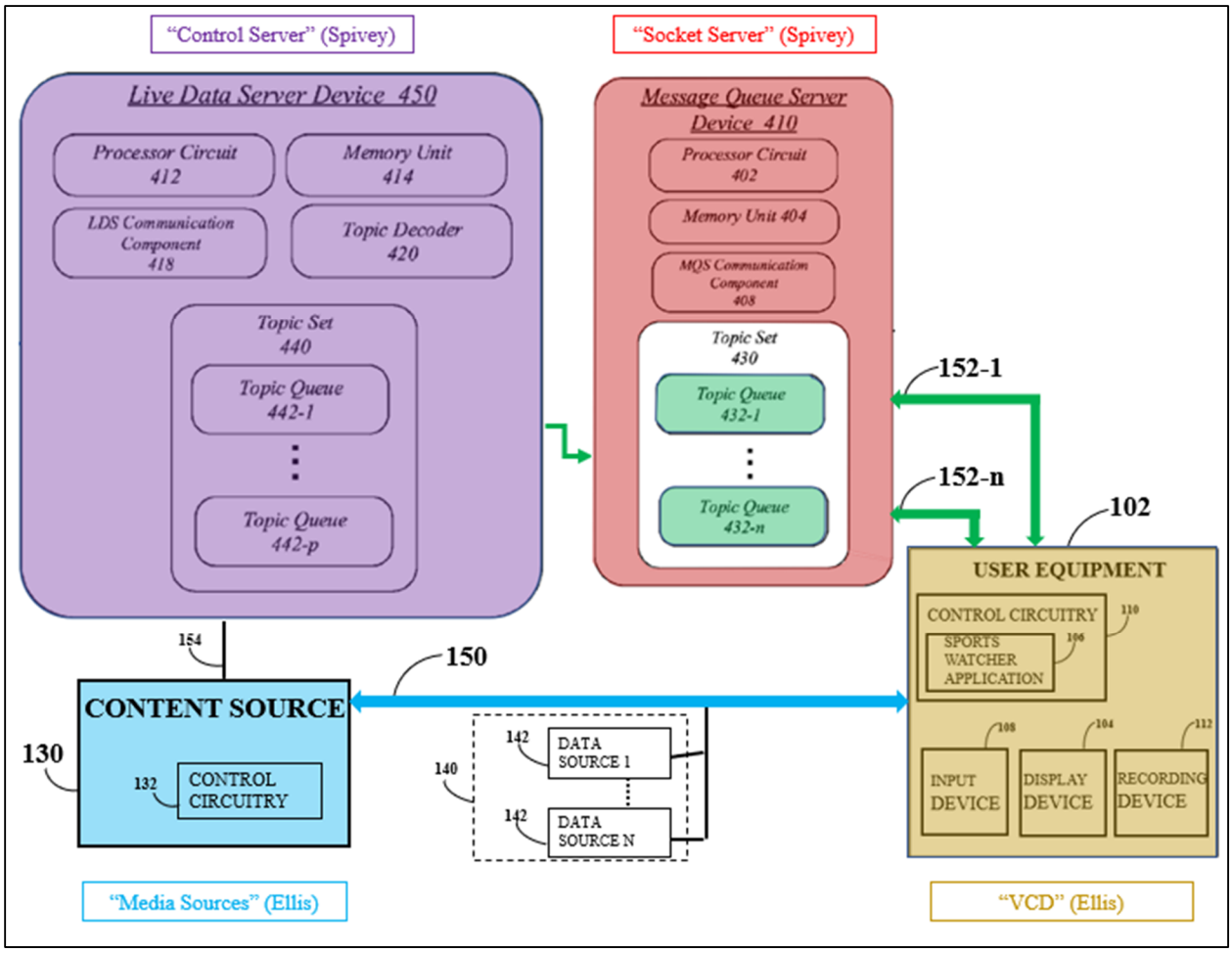

See Ex.1016 ¶¶39, 41, Fig. 1 (recreated); Ex.1017, Fig. 4 (recreated) (combined as explained above); Ex.1001 ¶122. The combined system would maintain the video content delivery system and upgrade the supplemental content data delivery system by including a socket server to provide real-time data with reduced latency. Ex.1001 ¶122.

A POSA would have been motivated to modify Ellis in light of Spivey because both references relate to the same technical subject matter—content delivery for real-time events. *Id.* ¶¶123-124; Ex.1016, Abstract; Ex.1017, Abstract. Both Ellis

and Spivey describe methods and/or systems for streaming video and/or event data to one or more users, such that video and/or event data are transmitted simultaneously. *See, e.g.*, Ex.1016 ¶156; Ex.1017, Abstract; Ex.1001 ¶¶123-124. A POSA would have also combined Ellis and Spivey because the references solve the same or similar problems, namely, providing video and/or event data to multiple users over the Internet quickly to multiple users. Ex.1001 ¶¶123-124.

Implementing certain portions of Spivey's system into Ellis's system would have been obvious because doing so would have required only the simple substitution of known elements for another to obtain predictable results. *Id.* ¶125. For example, Ellis discloses compatible hardware and software components to act as a source for event information to be transmitted to users. *See, e.g.*, Ex.1016 ¶47 ("Content source 130, supplemental content source 120, and data sources 140 are shown in FIG. 1 as separate elements" but "[i]n practice, their functionality may be combined into a single mechanism and provided from a single system at a single facility, or their functionality may be provided by multiple systems at multiple facilities."). Predictably, therefore, a POSA would have simply substituted portions of Ellis's SCS with Spivey's LDSD and MQSD. Ex.1001 ¶125. For example, it would have been obvious to substitute any of Ellis's elements with any combination of Spivey's LDSD, MQSD, and/or Live Data Source(s), which are similarly

involved in transmitting live event data to users and may be configured in any manner. Ex.1001 ¶¶125-126.

A POSA would have had a reasonable expectation of success in integrating Spivey's control server and socket server into Ellis's data delivery system. *Id.* ¶¶117-126. Understanding the compatibility of these similar systems, a POSA would have had a reasonable expectation of success in integrating Spivey's system of "topic queues and open duplex communication connections" employing websockets to transmit "data from a live event (e.g., news event, a gaming event, sporting event, etc.)" to multiple users "in real-time." Ex.1017 ¶27; Ex.1001 ¶126.

2. Independent Claim 8

a. Limitations 8.0-8.2[3]

Ellis discloses broadcasting systems and methods for "enhanced sports-related media content access and display." Ex.1016, Abstract. Figure 1 is an illustrative media system:

[3] Ex.1048 is a claim listing that enumerates each claim element.

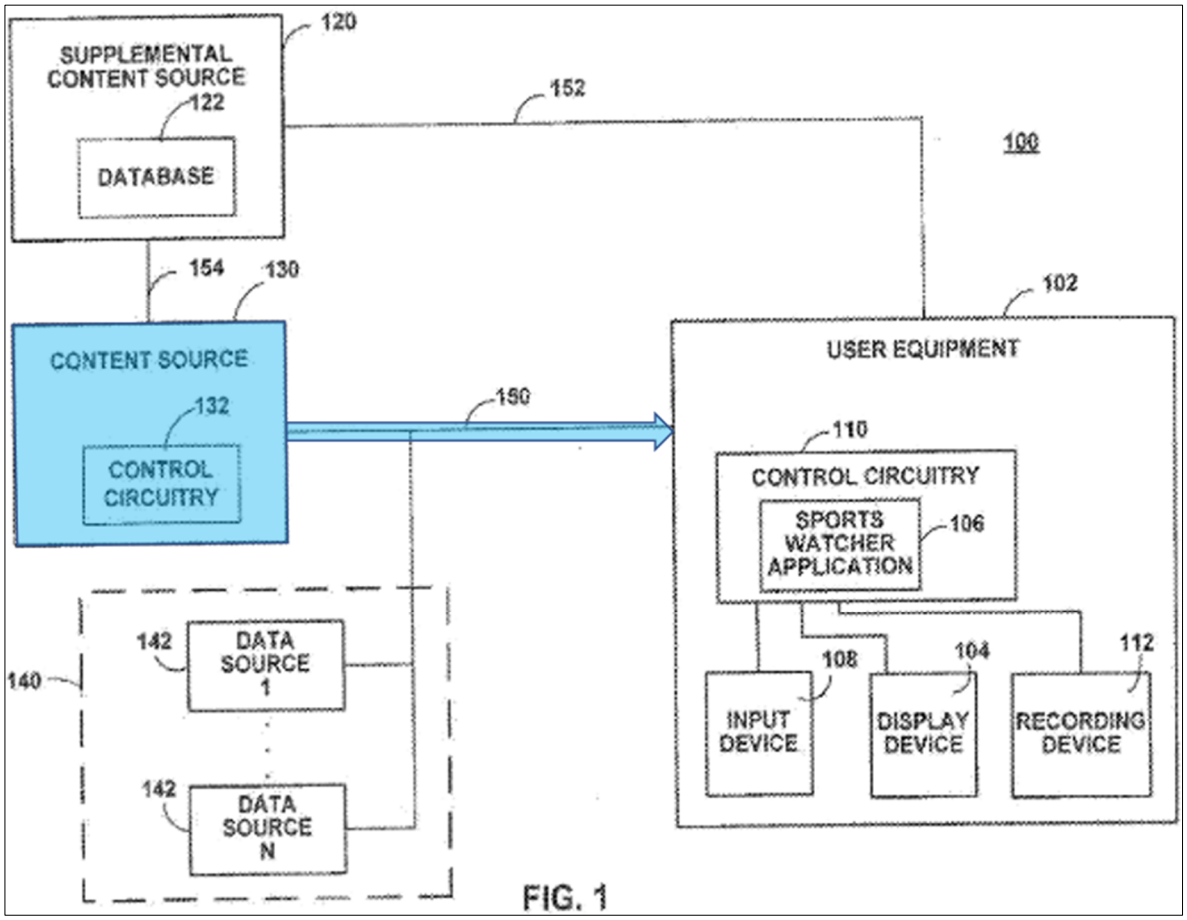

Id. ¶15, Fig. 1. As depicted, Ellis's system includes content sources 130 (*i.e.,* "media sources"), which are "any suitable source of media content" such as an "Internet or network media/web server, or any other suitable facility or system for originating or distributing passive or interactive content to user equipment." Ex.1016 ¶40. Ellis's content sources receive a broadcast of a live event and distribute video content to users 102 via communications paths 150. *See id.* ¶¶39-41, 45, 47; *see also* Ex.1001 ¶183. Ellis also discloses multiple content sources, *i.e.*, a plurality. Ex.1016 ¶39. The content sources provide multiple streams of digital content, including "broadcast programming" and live sporting events. *Id.* ¶¶40, 45, 74. Ellis further

discloses that a user may "actively watch one or more sporting events," and the user "may change or swap primary and/or secondary sporting events at any time." *Id.* ¶¶61-62. Thus, Ellis discloses content sources that receive multiple live streams of digital content. Ex.1001 ¶183. Broadcasts of live events would obviously, if not inherently, include audio and video. *Id.*

The audio/video feed of the live sporting event that is distributed from content sources 130 to users 102 via communication paths 150 leaves the content sources from an endpoint. *See, e.g.,* Ex.1016, Fig. 1 (junction between 130 and 150), ¶74. To the extent Ellis does not specifically describe media source endpoints, a POSA would have understood that such endpoints were present in Ellis's system which delivers audio/video feeds from the media sources to the VCDs. Ex.1001 ¶184. Since Ellis uses the Internet Protocol, it necessarily uses Internet addresses/endpoints to designate the location from which VCDs can receive requested content. *Id.*

b. Limitation 8.3

As explained above, the combination of Ellis and Spivey provide video communication channels between the media source and the VCD, and event information communication channels between an event socket of the socket server and the VCD. *See* §§VIII.A.1, VIII.A.2.a. A POSA would have known that these communication channels would have been established using a known webserver,

which transmits instructions to the VCD to establish the connections and allow for the flow of data in the claimed manner. Ex.1001 ¶185; §IV.C.

Ellis further discloses that the VCD includes a display that can render video relating to the live event as well as first event information relating to the live event that the VCD receives from the video communication channels 150 and the event information communication channels 152. Ex.1001 ¶186; *see, e.g.*, Ex.1016, Abstract (disclosing broadcasting systems for "enhanced sports-related media content access and display"); Figs. 4-5 (displaying video and online gaming information); ¶132 ("game commentary from a variety of sources may also be displayed to the user").

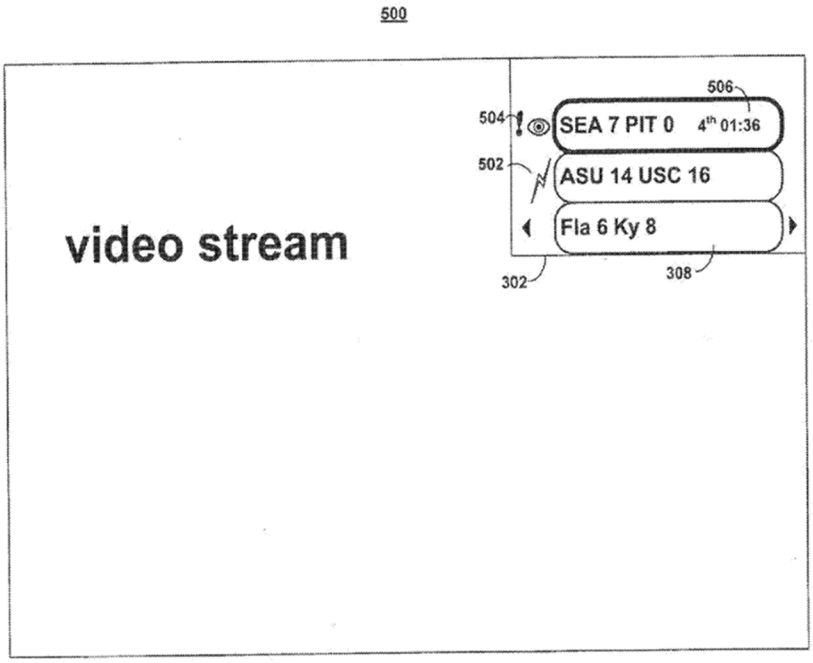

FIG. 5

c. Limitation 8.4

As explained above, Ellis and Spivey's combined system transmits instructions (using a known webserver) to the VCD to establish a video communication channel between the media source and the VCD. *See* §§VIII.A.2.a, IV.C, VIII.A.2.b. The video communication channel connects a specified media server endpoint of the media source to the VCD. *See* §VIII.A.2.a; Ex.1001 ¶187.

d. Limitation 8.5

Figure 1 of Ellis illustrates that the SCS transmits "sports-related information" to user equipment 102 over communication path 152. Ellis teaches that the SCS may be any suitable content source configured to provide real-time sports information but does not specify that the SCS is a socket server which transmits the sports-related information to the VCD.

Spivey provides "live event data in real time." Ex.1017, Abstract. Spivey teaches that VCDs "may request and participate in a websocket connection," which "typically comprises a two-way connection between two entities." *Id.* ¶¶43, 61. A POSA would have known that a websocket connection is between a socket server and at least one client. Ex.1001 ¶¶188-193.

The '088 explains that a socket server contains "one or more first event sockets [] dedicated to the first event information." Ex.1012, 21:29-33. The first event socket has a corresponding EventID that the VCD "uses … to connect to

[the]… socket," *e.g.*, by using a "URL including the … EventID in a path of the URL." *Id.,* 21:34-22:19. Thus, a POSA would have understood a "socket" to be a uniquely addressable communication endpoint on a server where first event information is provided to a VCD. Ex.1001 ¶190 (citing Ex.1012, 20:26-42, 21:34-54). A first event socket corresponding to the first event information is simply a socket where information about one sporting event is provided to VCDs. *Id.*

Spivey's topic queues are "where data payloads are placed" that, for example, "relate to a specific game." Ex.1017 ¶¶51-52. The data payloads include, "for example, a score, a play, …, and so forth." *Id.* ¶48. Topic queues have a corresponding "topic label" (*e.g.*, text string such as gamecenter.nfl.ravenssteelers) which is used "to identify a topic queue." *Id.* ¶¶49, 66.

VCDs use these topic label text strings to connect and subscribe to MQSD's topic queues. First, VCDs "request a live data connection" with the MQSD by "select[ing] or enter[ing] the address or connection information to a particular" MQSD. *See id.* ¶¶81-82. This "address may resemble a uniform resource locator (URL)." *Id.* ¶82. Second, as shown in Figure 9, VCDs can use the topic labels to select "the topics available from [the MQSD] in a topic selection list" and "subscribe to" those topic queues:

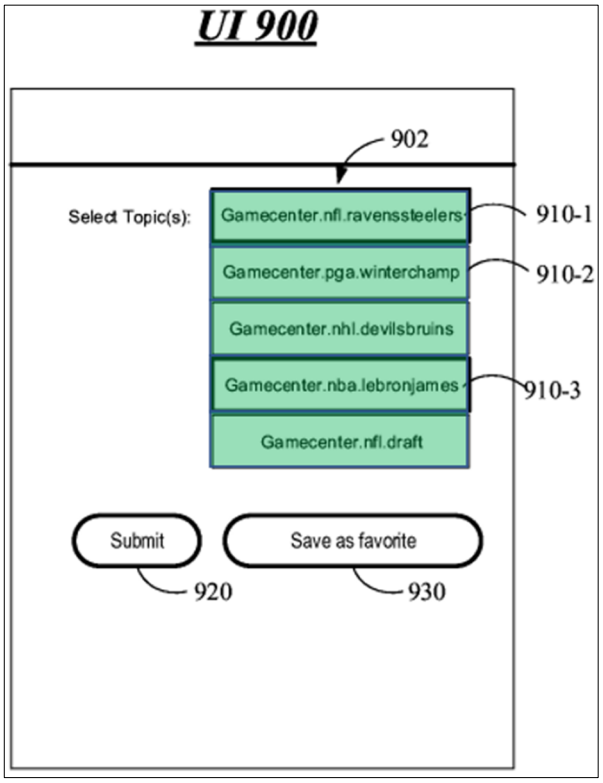

Id. ¶¶83-84, Fig. 9. Third, "the data payload" may be pushed to the subscribed connected devices that requested that topic. *Id.* ¶96. Thus, a POSA would have understood that Spivey's topic queues disclose first event sockets corresponding to the first event information. Ex.1001 ¶¶188-193.

Furthermore, as explained above, Ellis/Spivey transmits instructions (using a known webserver) to the VCD to establish an event information communication channel (*i.e.,* communication channel 152 in Ellis Figure 1, which is separate and distinct from communication channel 150 that transmits copies of the audio/video feed) between an event socket of the socket server and the VCD. *See* §§VIII.A.1, IV.C, VIII.A.2.b.

e. Limitation 8.6

Ellis discloses rendering first event information on a display of a VCD as a user-interactive feature overlaid on or adjacent to the first video relating to the live event. Ex.1016 ¶¶69, 72, 93, Figs. 3, 6.

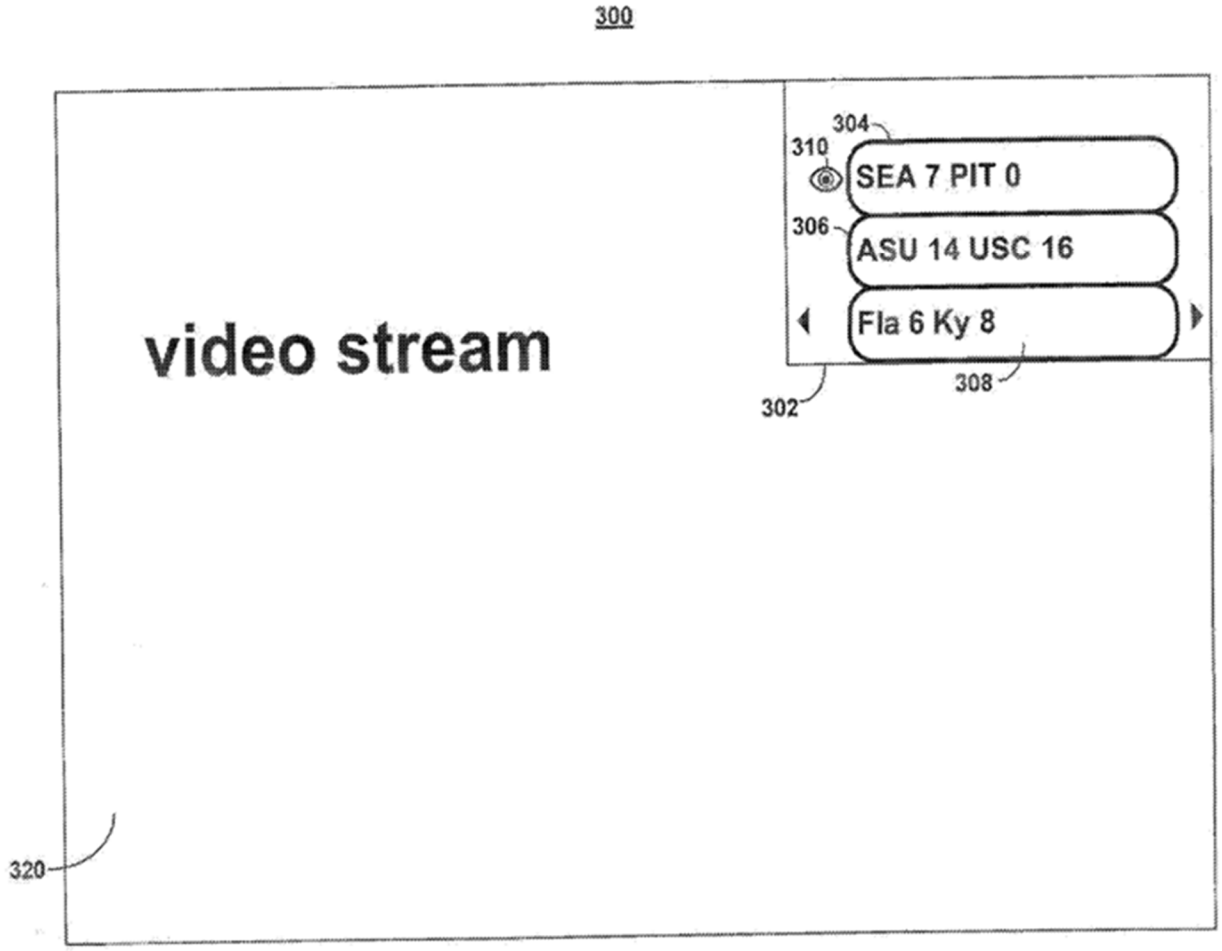

FIG. 3

For example, Ellis discloses a "game information screen" with a "flip banner" that the user can not only toggle but customize with digital sports content. Ex.1016 ¶72. Ellis also discloses a "wager" option in the flip banner that a user can select to display a "custom wagering interface" that allows the user to "wager on the game,

to modify a previous wager on the game, or to view a wager previously made on the game, including any results." *Id*. ¶98.

Furthermore, as explained above, Ellis/Spivey transmits instructions (using a webserver) to establish a communication channel that provides the event information between the socket server and VCD. *See* §§VIII.A.2.a, IV.C, VIII.A.2.b, VIII.A.2.d; Ex.1001 ¶¶194-196.

f. Limitation 8.7

Ellis discloses obtaining access to first additional information relating to the live event and redirecting to a first web site or first app when a first user selects at least a portion of the rendered at least one first user-interactive feature. For example, Ellis discloses a "wager" option in the flip banner that a user can select to display a "custom wagering interface" that allows the user to "wager on the game, to modify a previous wager on the game, or to view a wager previously made on the game, including any results." *Id.* ¶98.

As a further example, when a user of Ellis selects the "TV Guide" option, an "interactive media guidance application main menu" appears on the display, presenting the user with several options to further engage with sporting event information. *Id.* ¶103. Figure 7, below, illustrates the options available to the user:

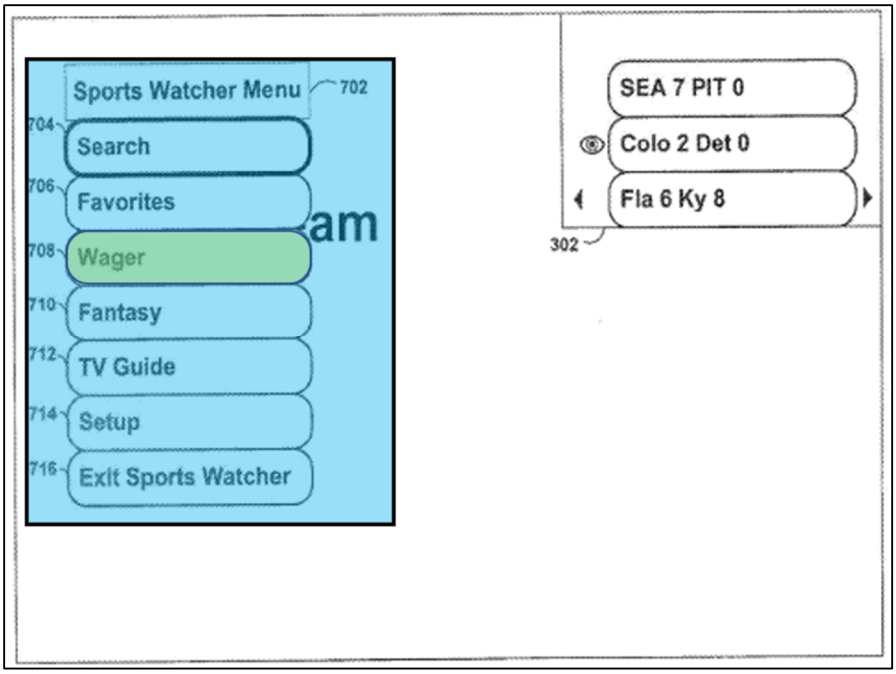

Id., Fig.7. For example, "display screen 1500 (FIG.15) may be displayed after a user selects wagering option 708." *Id.* ¶103. Figure 15, displaying wagering information related to a first sporting event, is shown below:

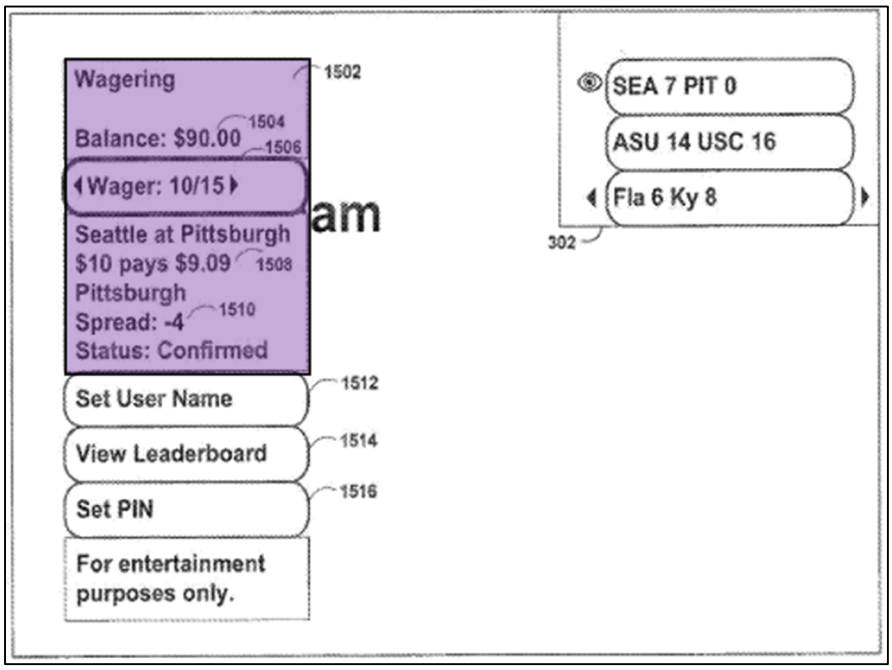

Id., Fig. 15. Additionally, Ellis discloses displaying a screen that allows a user to "select any commentary option to be presented" relevant to a sporting event. *Id.* ¶132. Game commentary "may include text, graphics, video, and interactive elements (e.g., interactive playbooks, polls, and discussion forums)." *Id.* Figure 25, below, illustrates the game commentary menu:

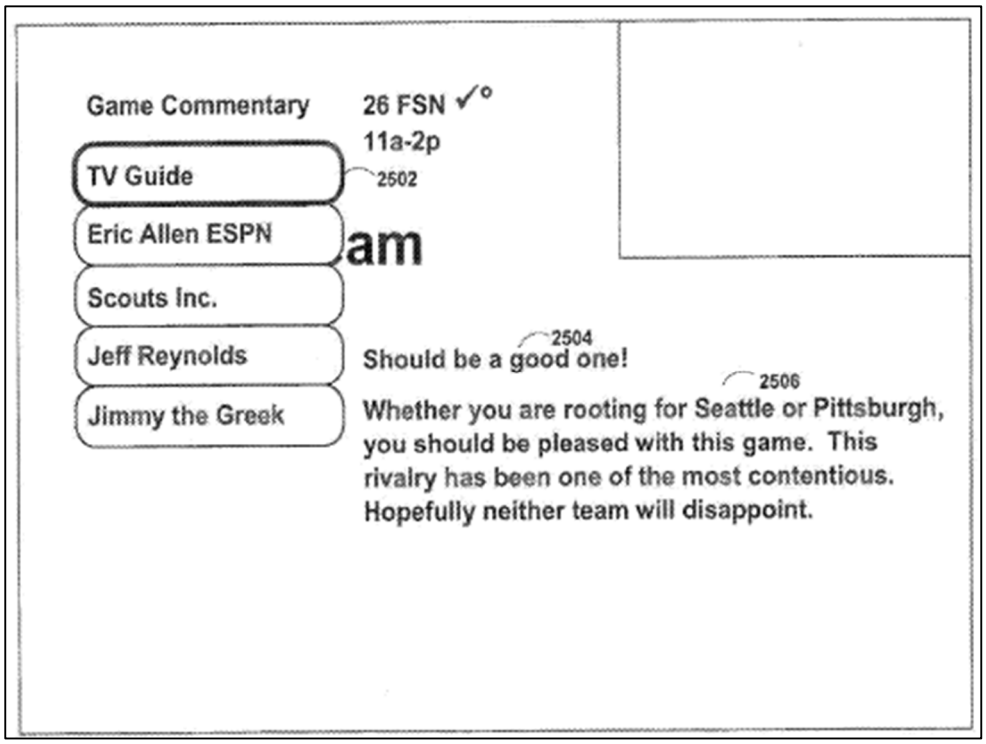

Id., Fig. 25. By selecting any option presented above, a user can access to the associated sports-related commentary and be redirected. *Id.* ¶132; *see also id.* ¶72 (disclosing user's ability to obtain access to additional information relating to the live event by way of a "game information screen" with a "flip banner" that the user can both toggle and customize with digital sports content); Ex.1001 ¶¶197-198.

g. Limitation 8.8

This limitation is substantially the same as Limitation 8.3, except that it requires transmitting *second* instructions to a *second* client device that includes a *second* display, and that the second instructions also render the first event information relating to the live event. For the same reasons explained above with respect to Limitation 8.3 and the first instructions, first client device, and first display, and because Ellis discloses transmitting multiple streams of digital content to multiple different users, Ellis discloses this limitation. *See* §VIII.A.2.b; Ex.1001 ¶199; Ex.1016 ¶¶39, 94.

h. Limitation 8.9

As explained above with respect to Limitation 8.5, Ellis/Spivey's system transmits instructions (using a webserver) to a VCD to cause the VCD to connect to a first event socket of a socket server to receive, on an event information communication channel between the first event socket and the VCD, digital content corresponding to the first event information. *See* §VIII.A.2.d; Ex.1001 ¶¶200-202. Limitation 8.9 is substantially the same as Limitation 8.5 but requires another connection between the same first event socket of the socket and a *second* VCD, such that the digital content corresponding to the first event information received by the first VCD and the second VCD is synchronized and client-by-client latency

between the two VCDs to render the first event information is mitigated or significantly reduced.

For the same reasons provided above as to Limitation 8.5, and because the combination of Ellis and Spivey enables multiple VCDs to connect to any number of event sockets, this limitation is met. *See* §§VIII.A.2.d; VIII.A.2.b; Ex.1001 ¶201; Ex.1016 ¶¶39, 94; Ex.1017 ¶¶78, 81-82.

To the extent the synchronization and client-by-client latency mitigation limitation is not met simply by virtue of the Ellis and Spivey combination satisfying all the structural limitations of the claims, the Ellis and Spivey combination nonetheless share the first event information in a synchronized manner between VCDs that mitigates client-by-client latency. Spivey discloses this, as it teaches that "the embodiments discussed herein may reduce [] delay to an order of milliseconds (ms) (e.g., 100ms) or less, providing a significant advantage over the conventional practices." Ex.1017 ¶28. Spivey further teaches that digital content "may be pushed to the subscribed connected client devices substantially simultaneously with . . . a time delay of 100 milliseconds or less." *Id.* ¶96. According to Spivey, "'substantially simultaneously' means that the set of actions execute within the same defined period of time. The defined period of time may be of any length as suitable for a given implementation." *Id.*; Ex.1001 ¶202.

i. Limitation 8.10

This limitation is substantially the same as Limitation 8.6, except that it requires the first event information to be rendered as a user-interactive feature on the display of the *second* VCD. This limitation is met for at least the same reasons as explained for Limitation 8.6. *See* §VIII.A.2.e, *supra*; Ex.1001 ¶203. Ellis discloses a plurality of different communication channels facilitating digital content transmission for the reasons stated above. *See* Ex.1016 ¶¶39, 94; §§VIII.A.1.a, VIII.A.2.a, *supra*.

j. Limitation 8.11

This limitation is substantially the same as Limitation 8.7, except that it requires obtaining the claimed access when a user of the *second* VCD selects a portion of the rendered *second* user-interactive feature. This limitation is met for at least the same reasons as explained for Limitation 8.7. *See* §VIII.A.2.f, *supra*; Ex.1001 ¶204. Ellis discloses a plurality of different communication channels facilitating digital content transmission for the reasons stated above. *See* Ex.1016 ¶¶39, 94; §§VIII.A.1.a, VIII.A.2.a, *supra*.

3. Dependent Claim 11

a. Limitations 11.0-11.2

Ellis discloses a SCS providing first live event information germane to the first live sporting event through a "plurality of real-time data feeds," one of which

can include "sports score and game status information," while the other carries "sports commentary." Ex.1016 ¶41; *see also id.* ¶¶93, 103; Ex.1001 ¶205.

4. Dependent Claim 12

a. Limitations 12.0-12.2

See §VIII.A.3.

B. Ground 1B: Claims 9, 10, and 13-23 Are Obvious Over Ellis in View of Spivey and Abulikemu

1. Motivation to Combine

The motivation to combine Ellis with Spivey is discussed above. *See* §VIII.A.1. A POSA would have further been motivated to combine Ellis and Spivey with Abulikemu. Ex.1001 ¶¶135-139.

Given that the concept of a composite stream is an obvious and well-known implementation of Ellis/Spivey, a POSA would have been motivated to configure Ellis/Spivey to enable the delivery of composite outgoing streams to improve the way end-users can view and participate in broadcasts of live events. *Id.*; Ex.1050 ¶¶9-10.

Like Ellis, Abulikemu teaches a live streaming system configured to provide live video content about an event to multiple users over the Internet. Ex.1050 ¶¶1, 11-16, 23-24, Abstract, Fig. 1.

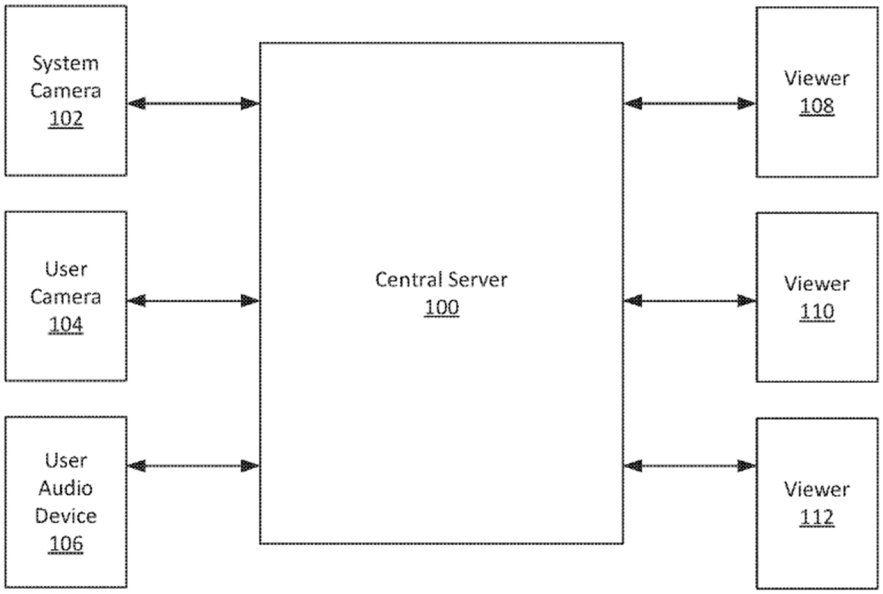

FIG. 1

Abulikemu states that "[t]raditionally, live video of an event such as a soccer game is provided by a single broadcasting company," which "does not allow the viewers to participate in the filming, editing, or any other part of broadcasting the event." *Id.* ¶2. To expand the way users can view and participate in broadcasts of live events, Abulikemu configured its broadcasting system to "allow[] incorporation of user-generated content such as user videos of a live event and user commentary (audio and/or video) about the live event." *Id.* ¶10. This feature "provide[s] a way for a viewer to customize the video/audio feed of an event rather than having no choice but to accept the feed provided by the broadcasting company." *Id.*

Specifically, Abulikemu's system includes a central server 100 (*e.g.*, a "media source") that receives a live audio/video stream of an event from a system camera 102. *Id.* ¶¶11-16. The central server 100 provides copies of the live audio/video

stream to multiple viewers 108, 110, 112. *Id.* ¶¶11-16. Any viewer receiving the stream may then provide their own video/audio commentary and send it back to the central server. *Id.* ¶¶11-16, 21-24, Fig. 2. The central server compiles the live stream and the user's commentary then streams the compiled stream to any viewer that chooses to receive the compiled stream. *Id.* ¶¶11-16, 21-24, Fig. 2.

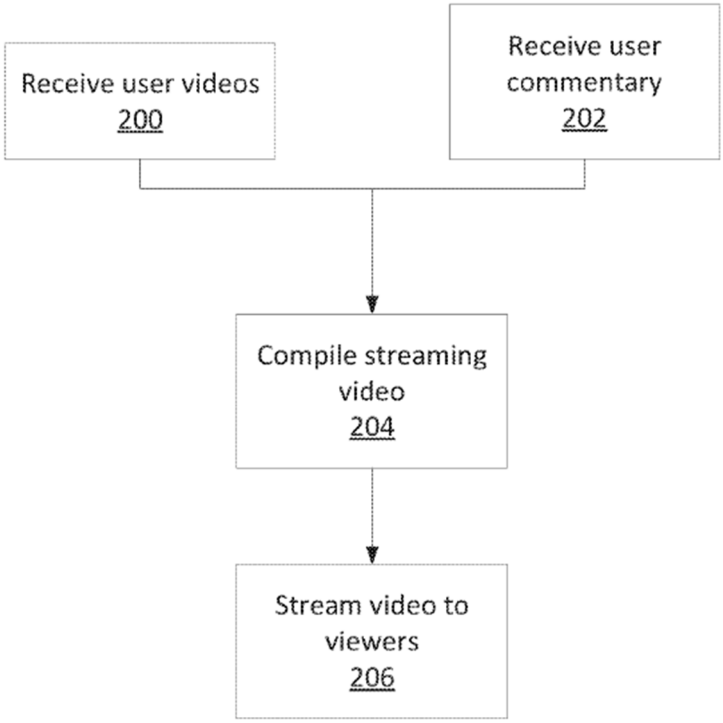

FIG. 2

A POSA would have been motivated to configure Ellis/Spivey to implement composite outgoing streaming, as taught by Abulikemu. Ellis recognizes the value of user engagement during the live stream process. Ex.1001 ¶139; Ex.1016 ¶¶5, 11, 13, 38, 40. Moreover, for a POSA, providing composite outgoing stream functionality to a system such as Ellis/Spivey, which already provides all the system

architecture allowing multiple live streams to be sent to clients, applies a known technique to a known device that was ready for improvement to yield a predictable result. Ex.1001 ¶139. And a POSA would have had a reasonable expectation of success in providing composite outgoing stream functionality because Ellis already provides the necessary underlying system architecture, and programming the existing structures to obtain this functionality would have been a simple engineering task well-within the skill of a POSA. *Id.*; *see* §VII.A.

2. Dependent Claim 9

a. Limitations 9.0-9.1

Abulikemu discloses media sources, *e.g.*, central server 100, configured to receive from the first VCD, *e.g.,* viewer 108, a composite outgoing stream of the audio/video feed and additional video content. *See* §VIII.B.1; Ex.1050 ¶¶11-16, 21-24, Fig. 2.

b. Limitation 9.2

Abulikemu discloses media sources, *e.g.*, central server 100, configured to provide a first copy of the composite outgoing stream of the audio/video feed and the additional video content from a second media server endpoint of the at least one media source. *See* §VIII.B.1; Ex.1050 ¶¶11-16, 21-24, Fig. 2. For the same reasons explained above with respect to Ellis, a POSA would have understood that Abulikemu also uses Internet address/endpoints to designate the media source location from which VCDs can receive requested content. Ex.1001 ¶221; *see*

§VIII.A.2.a. Likewise, a POSA would have also understood that Abulikemu uses other, distinct Internet address/endpoints to designate the location from which the VCDs can receive the requested composite outgoing stream. Ex.1001 ¶221.

c. Limitations 9.3-9.4

As explained above, a POSA would have known that the video and event information communication channels disclosed by Ellis/Spivey would have been established using a known webserver, which transmits instructions to the VCD to establish the connections and allow for the flow of data in the claimed manner. *Id.* ¶222; §§IV.C, VIII.A.2.b. A POSA would have likewise configured the known webserver to facilitate a connection between the second VCD and the second media server endpoint to provide the first copy of the composite outgoing stream to the second VCD. Ex.1001 ¶222. As explained above, a POSA would have understood that video communication channels between the media source and the VCD, and event information communication channels between an event socket of the socket server and the VCD, are established when the known webserver transmits instructions to the VCD. *See* §§VIII.A.2.b, VIII.A.2.g; Ex.1001 ¶222.

3. Dependent Claim 10

a. Limitations 10.0-10.1

RTMP is a low-latency data transmission protocol in use as of at least 2012 that is designed to support live online streaming in social media platforms, streaming platforms, and media servers. *See* Ex.1001 ¶223 (citing Ex.1035, 3; Ex.1036, 1).

Once a connection is established between the client and server, RTMP operates as a bi-directional multiplexing service over TCP to stream live and on-demand video or audio data from the server to the VCD. *See id.* (citing Ex.1035, 3). The '088 references use of this traditional protocol. *See* Ex.1012, Figs. 2, 29. HLS is another known traditional data transmission protocol referenced by the '088. HLS was adopted in 2009 to provide video feeds over the Internet. Ex.1028, 1.

Ellis teaches streaming video from content source 130, *e.g.*, an "Internet or network media/web server" to a VCD, over the Internet. Ex.1016 ¶¶40, 74. Thus, a POSA would have understood that Ellis, filed in 2014, teaches using all forms of standard Internet transmission protocols, including RTMP and HLS. Ex.1001 ¶224.

To the extent Ellis does not specifically disclose that its media sources comprise RTMP and HLS servers, it would have been well-within a POSA's knowledge to utilize these known protocols to execute the desired streaming functionality. *Id.* ¶225. Specifically, these protocols were well-known as desirable techniques for transmitting data to multiple users. *Id*. Selecting these protocols among other known protocols would have been a simple and obvious matter of design choice. *Id*.

b. Limitation 10.2

As explained above, it would have been a simple and obvious matter of design choice for Ellis's media sources to employ an HLS server. *See* §VIII.B.3.a; Ex.1001

¶226. In employing the HLS protocol in Ellis's system, a POSA would have coupled the HLS server to the first media server endpoint. Ex.1001 ¶226.

c. Limitation 10.3

As explained above, it would have been a simple and obvious matter of design choice for Ellis's media sources to include RTMP and HLS servers. *See* §VIII.B.3.a; Ex.1001 ¶227. Moreover, a POSA would have understood that implementing that design included configuring the RTMP server to receive live event data and sending the data to an HLS server. Thus, in employing the RTMP and HLS protocols in Ellis's system, a POSA would have configured the system to transmit a first HLS copy of the audio/video feed of the live event from the RTMP server to the HLS server. Ex.1001 ¶227 (citing Ex.1051, 6:44-59, 18:6-67, 19:34-44, Fig. 5).

d. Limitation 10.4

As explained above, it would have been a simple and obvious matter of design choice for Ellis's media sources to include an HLS server. *See* §VIII.B.3.a; Ex.1001 ¶228. In employing the HLS protocols in Ellis's system, a POSA would have configured the HLS server to provide the first copy of the audio/video feed of the live event as another HLS copy from the first media server endpoint. Ex.1001 ¶228 (citing Ex.1051, 6:44-59, 18:6-67, 19:34-44, Fig. 5).

4. Independent Claim 13

a. Limitations 13.0-13.2

Ellis discloses these limitations for the same reasons stated above. *See* §VIII.A.2.a.

b. Limitation 13.3

Ellis/Spivey/Abulikemu discloses this limitation for the same reasons stated above. *See* §VIII.B.2.a.

c. Limitation 13.4

Ellis/Spivey/Abulikemu discloses this limitation for the same reasons stated above. *See* §VIII.B.2.b.

d. Limitation 13.5

Ellis/Spivey discloses this limitation for the same reasons stated above. *See* §§VIII.A.2.b, VIII.A.2.g, VIII.B.2.c.

e. Limitation 13.6

Ellis/Spivey/Abulikemu discloses this limitation for the same reasons stated above. *See* §VIII.B.2.c.

f. Limitation 13.7

Limitation 13.7 appears to include an antecedent basis issue. Specifically, Limitation 13.7 recites "*the* at least one first display of *the* first client device," but the only previously-discussed display in Claim 13 is located on the *second* client device. *See* Limitation 13.5 ("a second client device that includes at least one first

display"). Although this lack of antecedent basis potentially renders Claim 13 invalid under 35 U.S.C. §112, for purposes of this petition, the display referred to in Limitation 13.7 is understood to be located on the *second* client device, not the first. Ex.1001 ¶234.

Nevertheless, to the extent this limitation can be understood, it is disclosed by Ellis/Spivey/Abulikemu for the same reasons stated above. *See* §§VIII.A.2, VIII.B.2.

To the extent this limitation is understood to require the instructions transmitted to the *second* client device to cause the *second* client device to render the composite video stream on a display of the *first* client device, it would have been a simple and obvious matter of design choice to select which client device to use for displaying the composite video stream. Ex.1001 ¶¶235-236.

g. Limitation 13.8

Ellis/Spivey discloses this limitation for the same reasons stated above. *See* §VIII.A.2.d.

h. Limitation 13.9

This limitation has the same potentially invalidating antecedent basis issue described above with respect to Limitation 13.7, appearing to mistakenly require the displayed content be rendered on the *first* client device, not the *second* client device. *See* §VIII.B.4.f. For the same reasons described above, the display referred to in

Limitation 24.10 is understood to be located on the *second* client device, not the first. *Id.*; Ex.1001 ¶238.

This limitation differs from Limitation 13.7 only in the type of content rendered on the display (*i.e.*, event information as opposed to composite video stream). To the extent this limitation can be understood, it is disclosed by Ellis/Spivey for the same reasons stated above. *See* §§VIII.A.2.d, VIII.A.2.e.

To the extent this limitation is understood to require the instructions transmitted to the *second* client device to cause the *second* client device to render the event information on a display of the *first* client device, it would have been a simple and obvious matter of design choice to select which client device to use for displaying the event information. Ex.1001 ¶¶239-240.

5. Dependent Claim 14

a. Limitations 14.0-14.1

These limitations are obvious over Ellis for the same reasons stated above. *See* §VIII.B.3.a.

b. Limitation 14.2

This limitation is obvious over Ellis for the same reasons stated above. *See* §VIII.B.3.c.

c. Limitation 14.3

This limitation is obvious over Ellis for the same reasons stated above. *See* §VIII.B.3.d.

6. Dependent Claim 15

a. Limitations 15.0-15.1

Ellis/Spivey discloses these limitations for the same reasons stated above. *See* §§VIII.A.2.g, VIII.A.2.i, VIII.A.2.j.

7. Dependent Claim 16

a. Limitations 16.0-16.2

Ellis/Spivey discloses these limitations for the same reasons stated above. *See* §VIII.A.3.a.

8. Dependent Claim 17

a. Limitations 17.0-17.2

Ellis/Spivey discloses these limitations for the same reasons stated above. *See* §VIII.A.4.a.

9. Dependent Claim 18

a. Limitations 18.0-18.2

Ellis/Spivey discloses these limitations for the same reasons stated above. *See* §§VIII.A.2.g, VIII.A.2.h.

10. Dependent Claim 19

a. Limitation 19.0

Ellis/Spivey discloses this limitation for the same reasons stated above. *See* §VIII.A.2.b.

b. Limitation 19.1

Ellis/Spivey/Abulikemu discloses this limitation for the same reasons stated above. *See* §§VIII.A.2, VIII.B.2, VIII.B.4.

11. Dependent Claim 20

a. Limitations 20.0-20.2

Ellis/Spivey/Abulikemu discloses these limitations for the same reasons stated above. *See* §§VIII.B.4, VIII.B.9, VIII.B.10.

a. Limitation 20.3

Ellis/Spivey/Abulikemu discloses this limitation for the same reasons stated above. *See* §§VIII.B.4, VIII.B.9, VIII.B.10.

12. Dependent Claim 21

a. Limitations 21.0-21.1

Ellis/Spivey discloses these limitations for the same reasons stated above. *See* §§VIII.A.2.f, VIII.A.2.j.

b. Limitation 21.2

Ellis/Spivey discloses this limitation for the same reasons stated above. *See* §§VIII.B.12.a, VIII.A.2.f, VIII.A.2.j.

13. Dependent Claim 22

a. Limitations 22.0-22.2

Ellis/Spivey discloses these limitations for the same reasons stated above. *See* §§VIII.A.3.a, VIII.B.7.a.

14. Dependent Claim 23

a. Limitations 23.0-23.2

Ellis/Spivey discloses these limitations for the same reasons stated above. *See* §§VIII.A.4.a, VIII.B.8.a.

C. Ground 2A: Claims 8, 11, and 12 Are Obvious Over Herzog in View of Spivey

1. Motivation to Combine

Herzog discloses methods and systems for viewing multiple videos related to the same sporting event in addition to live information about the event (meta-data). Ex.1001 ¶140. For example, Herzog's Figure 7 shows "four different videos of a live event and meta-data of multiple parameters" from which a user can select:

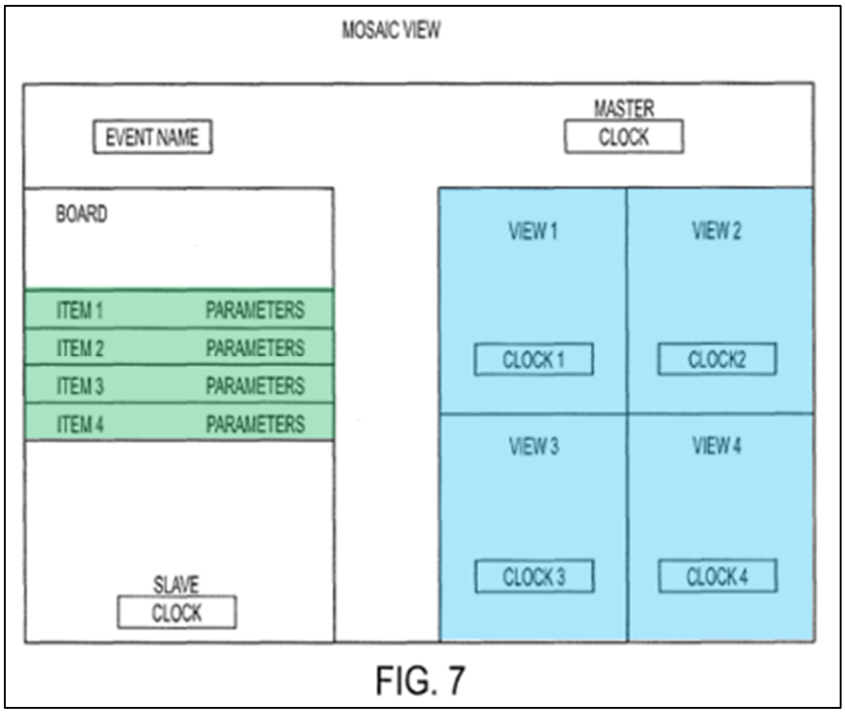

Ex.1015 ¶¶12, 80-81; Fig. 7. Herzog provides these video and data streams over separate connections:

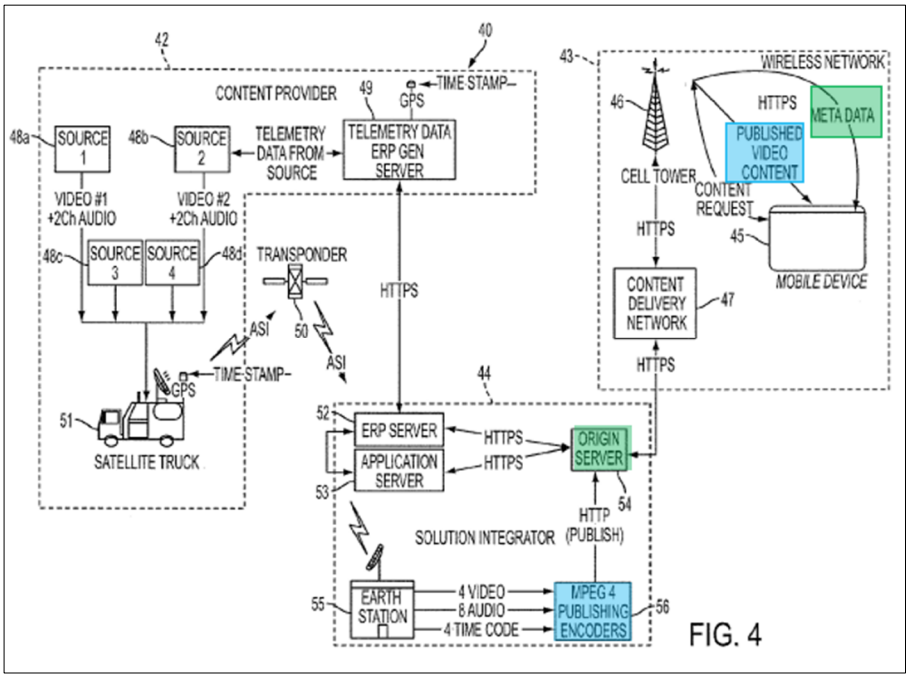

Id. ¶¶48-52, 67; Figs. 4, 6; Ex.1001 ¶140.

Herzog does not specifically disclose some backend server architecture supporting the data distribution—the claimed socket server. Ex.1001 ¶141. However, a POSA would have known the websocket client-server communication protocol Spivey employs was an alternative to the HTTP polling used by Herzog. *Id.*; §IV. A POSA would have found it obvious to implement Herzog's Origin Server as a websocket server, as taught by Spivey, to achieve full-duplex communications between a client and a remote host with low latency. Ex.1001 ¶141 (citing Ex.1046).

As noted above, *see* §VIII.A.1, a POSA would have understood that socket servers were well-known components for implementing real-time data delivery, such as in Herzog, with reduced latency. Ex.1001 ¶142; §IV, *supra*; Ex.1017 ¶¶35, 96. A POSA also would have appreciated the benefits associated with Spivey's MQSD

(*i.e.,* "socket server") which establishes websocket connections with VCDs, including convenient and efficient full-duplex communications between a client and a remote host with low latency. Ex.1017 ¶¶27-28, 43, 61, 74, 92, 96; Ex.1001 ¶142 (citing Ex.1046); §IV.B. A POSA, looking to improve Herzog's latency issues, would have looked to implement a system such as Spivey. Ex.1001 ¶142.

A POSA would have done so by implementing Spivey's MQSD at Herzog's Origin Server to achieve decreased latency data delivery. *See* Ex.1015 ¶¶50-51, Fig. 4; Ex.1017, Fig. 4; Ex.1001 ¶143. The combined system would maintain Herzog's video content delivery system and upgrade the data delivery system to reduce latency. Ex.1001 ¶143.

A POSA would have been motivated to combine Herzog with Spivey for the same reasons stated above with respect to Ground 1A. *See id.* ¶144; §VIII.A.1.a. First, Herzog and Spivey relate to the same technical subject matter—content delivery for real-time events. *See* Ex.1017, Abstract; Ex.1015, Abstract. Both references describe methods and/or systems for streaming video and/or event data to one or more users, such that video and/or event data are transmitted simultaneously. *See, e.g.*, Ex.1017, Abstract; Ex.1015, Abstract; Ex.1001 ¶144. Second, the references solve the same or similar problems, namely, providing video and/or event data to multiple users over the Internet quickly. *See, e.g.*, Ex.1017 ¶27; Ex.1015 ¶¶3, 19, 51.

A POSA would have had a reasonable expectation of success in combining Herzog with Spivey because Spivey provides a complementary system and contemplates being implemented in a content delivery system such as Herzog, stating that it can be used with "any well-known communication techniques and protocols, such as techniques suitable for use with … the Internet." Ex.1017 ¶155; Ex.1001 ¶145.

A POSA would have been motivated to combine Herzog with Spivey because Spivey provides a complementary solution describing the details of the backend architecture for organizing and transmitting event data to multiple users. Ex.1017, Abstract; Ex.1001 ¶146.

2. Independent Claim 8

a. Limitations 8.0-8.2

Herzog provides "live video and audio data" to user devices over a "communication network." Ex.1001 ¶320; *see* Ex.1015, Abstract. Herzog's primary embodiment includes providing "multiple video/audio streams of race cars and drivers [*i.e.*, sources 48a-d], as they are imaged at different locations on the race track:"

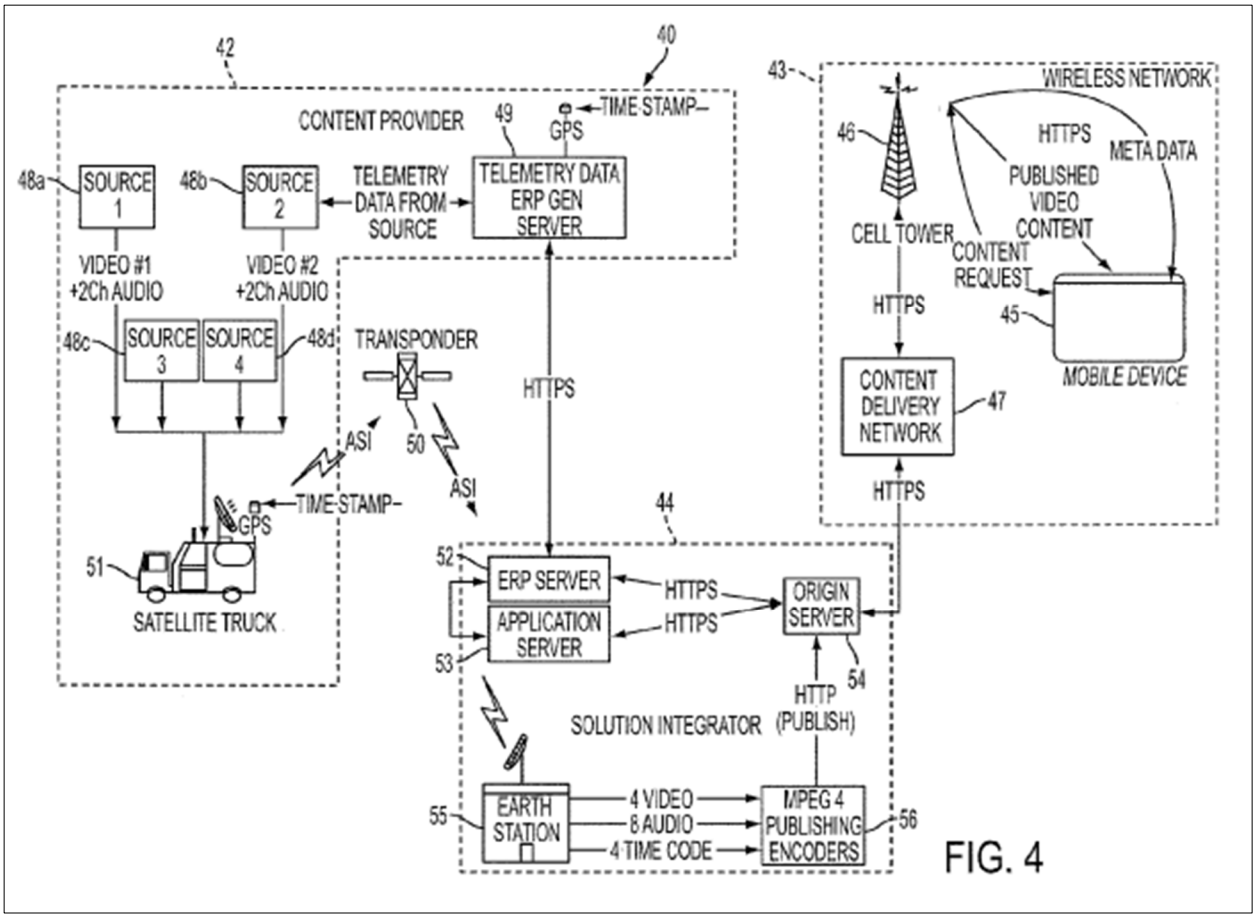

FIG. 4

Ex.1015 ¶45; Fig 4. This system makes these video feeds available to "mobile stations" and other "similar users." *Id.* ¶19. Each user can then request video from "one or more channels of video/audio for viewing a live event." *Id*. ¶70. The user then "receives both the video/audio stream" via HLS. *Id.* ¶51. Thus, Herzog provides a system where multiple different users can select the same, or different, live stream of digital content relating to a sporting event. Ex.1001 ¶320.

Herzog also provides event information germane to the sporting event. Specifically, Herzog transmits "meta-data" such as "the status of each car and driver in the race" and may include "lap number, car speed and acceleration," among other

event information. Ex.1015 ¶45; Ex.1001 ¶321. A POSA would have understood such meta-data to include online gaming information and/or score information. Ex.1001 ¶321.

Herzog discloses multiple MPEG 4 Publishing Encoders ("Encoders") as a plurality of media sources. Ex.1015 ¶48; Ex.1001 ¶322. As in the '088, these encoders receive all the video and audio data from the live event, such as the Indy Car Race. Ex.1015 ¶¶46 (any form of communication technologies may be used to send video/audio data to Encoders), 49. The Encoders can "encode[]" the video and audio data and then the "encoded video is then published to the content delivery network 47 (for example) via IP utilizing [] HLS." *Id.* ¶¶49, 55.

Herzog's Encoders receive the video and audio data from the live event. Ex.1015 ¶49. Herzog discloses that the audio and video data can be provided to the Encoders using "communication technologies for communicating multiple video and audio streams." *Id.* ¶46. Thus, Herzog discloses media sources that receive an audio/video feed of a live event. Ex.1001 ¶323.

Herzog provides the selected audio/video stream to each user individually over individual communication channels via HLS, *i.e.*, an Internet connection. Ex.1015 ¶51. Thus, a POSA would have understood that each user device receives its own copy of the audio/video stream from the Encoders over a communication channel that is unique to each user device. *Id.* ¶¶2 (user devices "are used mainly for

viewing published content from the Internet, such as video."), 51; Ex.1001 ¶324. This would create a plurality of copies being distributed, where the first copy is sent to the first user, and so on. Thus, each user would receive an individual copy of the audio/video feed of the live event from the media sources. Ex.1001 ¶324.

Herzog discloses that the copies of the audio/video feed of the live event are provided to the users over the individual communication channels that are established between the user and a media server endpoint/Internet address of the media sources. *Id.* ¶325. Specifically, Herzog discloses a media server endpoint/Internet address, albeit indirectly, when describing the type of content a VCD may store. Ex.1015 ¶35 ("The memories 114, 116 also store various data, such as telephone numbers and server addresses . . . ."). To the extent Herzog does not explicitly reference a media server endpoint/Internet address, a POSA would have understood that the system in Herzog necessarily requires such an endpoint/address to stream the audio/video feed of the live event from the media sources to the VCD. Ex.1001 ¶325. Specifically, a POSA would have understood that Herzog's HTTPS communication format uses the Transmission Control Protocol (TCP), which in turn uses the Internet Protocol (IP). *Id.* These protocols require an IP address to designate the location from which VCDs can receive requested digital content. *Id.*

b. Limitation 8.3

Herzog discloses an "application server 53" (*i.e.*, webserver), which is "configured to receive the request from the client application software and begin sending the meta-data with the corresponding .JSON time stamp via the ERP server 52 in the solution integrator 44." Ex.1015 ¶58. Herzog's application server is depicted below in Figure 4:

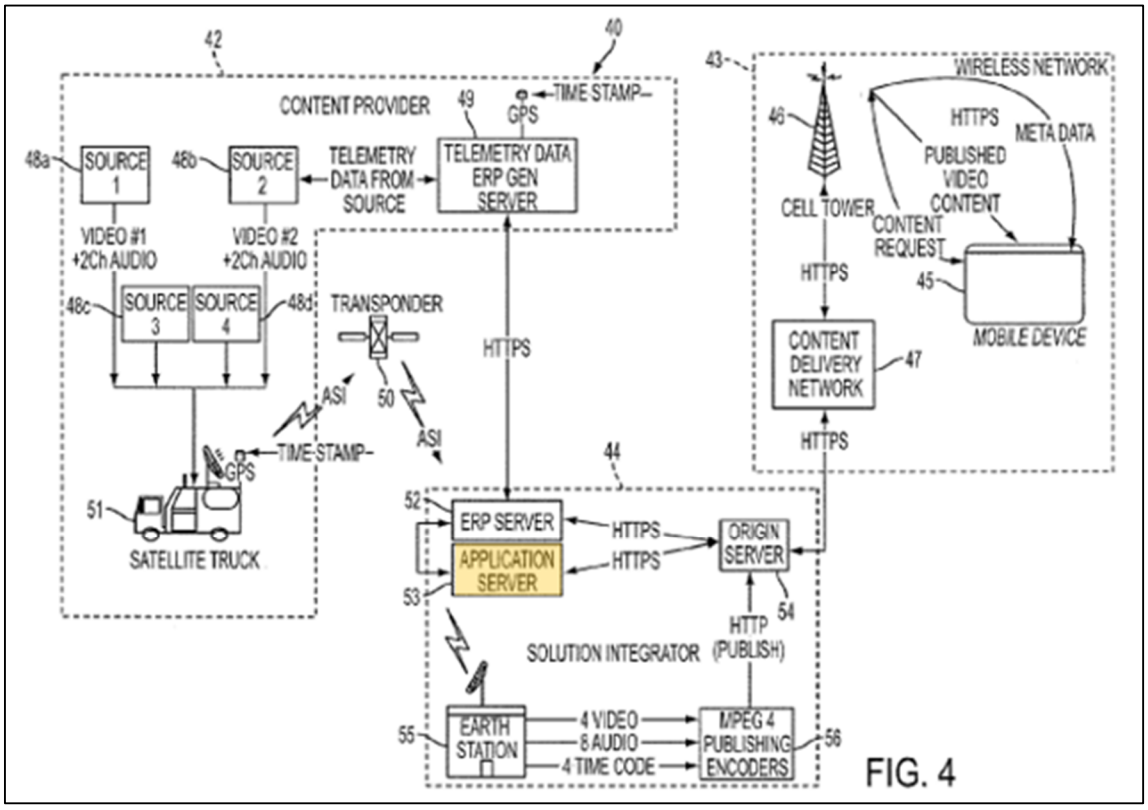

Ex.1015, Fig. 4. The application server facilitates streaming between the origin server and VCD by receiving a "request with the time code call out" from the VCD, then prompting the origin server to transmit a meta-data stream to the VCDs. *Id.* ¶51. While doing so, the application server "satisfies time synchronization requirements

between a client application residing in mobile device 45 and the solution integrator 44." *Id.*

Herzog's application server (*i.e.*, "webserver") transmits instructions to VCDs to cause the VCDs to request a copy of audio/video feeds of the live event. *See* Ex.1015 ¶¶28, 51, 84, 86, 88, cl. 11; §VIII.C.2.a. Furthermore, a POSA would have understood that Herzog's application server transmits instructions to VCDs to establish a connection between its VCDs and media sources. Ex.1001 ¶¶326-327.

Herzog also discloses causing a display on the VCD to render video and event information relating to the event, as shown below in Figures 4 and 7:

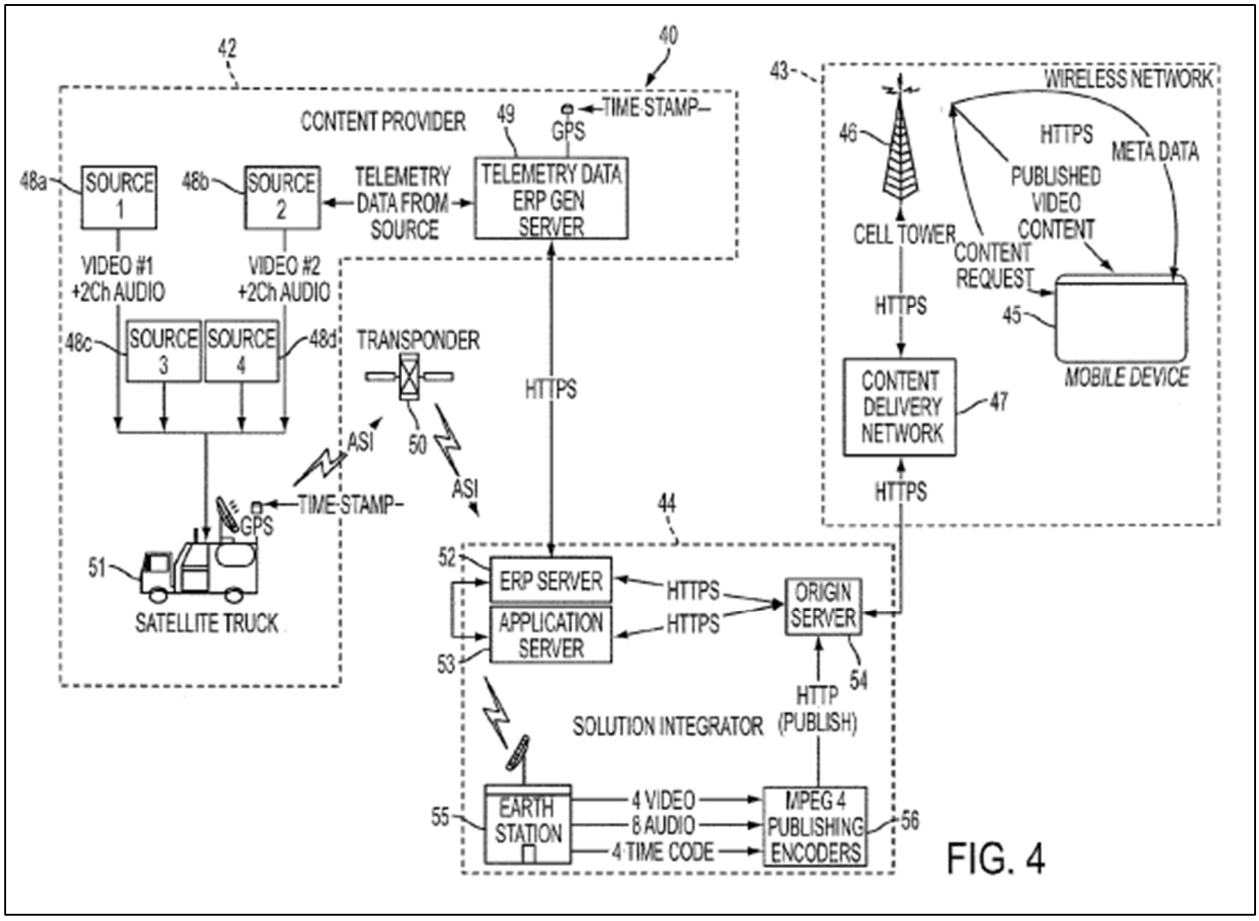

FIG. 4

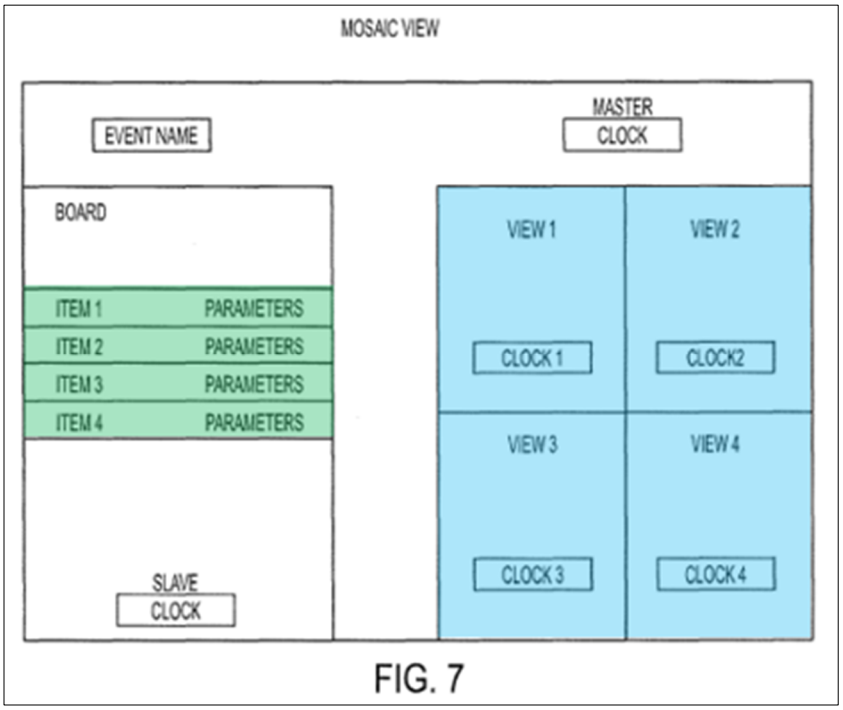

Ex.1015 ¶12; Figs. 4, 7. Herzog accomplishes this by streaming "multiple paths of… content" (*i.e.*, sources 48a-d), then "display[s] the different streaming content in a synchronous manner." *Id.* ¶16. Herzog discloses that these sources relate to a sporting event, as they originate from a "sports venue." *Id.;* Ex.1001 ¶328.

Furthermore, as shown below in Figure 6, Herzog discloses a VCD receiving an audio/video feed of a sporting event on a communication channel after making a "user video request":

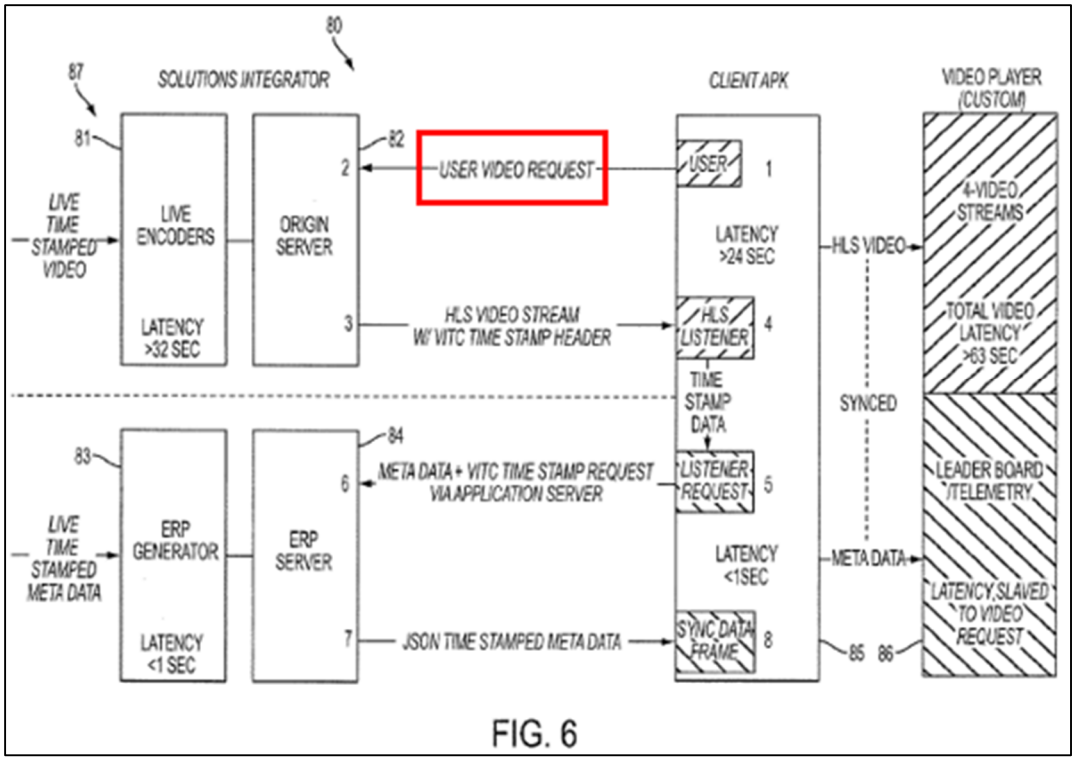

FIG. 6

Ex.1015, Fig. 6. Herzog makes clear that a VCD receives this audio/video feed via a communication channel, as it discloses that "it may be desirable for a user to view video that is streamed live from the Internet to a client player using" HLS. *Id.* ¶3; Ex.1001 ¶329.

c. Limitation 8.4

As explained above, Herzog's application server transmits instructions to the VCD to establish a communication channel between the media source and the VCD that provides copies of the audio/video feed of the live event to the VCD. *See* §§VIII.C.2.a, VIII.C.2.b; Ex.1001 ¶330. The communication channel connects a specified media server endpoint of the media source to the VCD. *See* §VIII.C.2.a.

d. Limitation 8.5

Herzog/Spivey discloses a socket server having a plurality of event sockets that correspond to particular event information. *See* §VIII.C.1.

Herzog discloses providing event information, including online gaming information/score information, over a separate connection to VCDs. Ex.1015 ¶¶48-52, 67; Figs. 4, 6; Ex.1001 ¶¶331-332. That process includes the ERP Server (*i.e.,* a control server) transmitting data to the Origin Server:

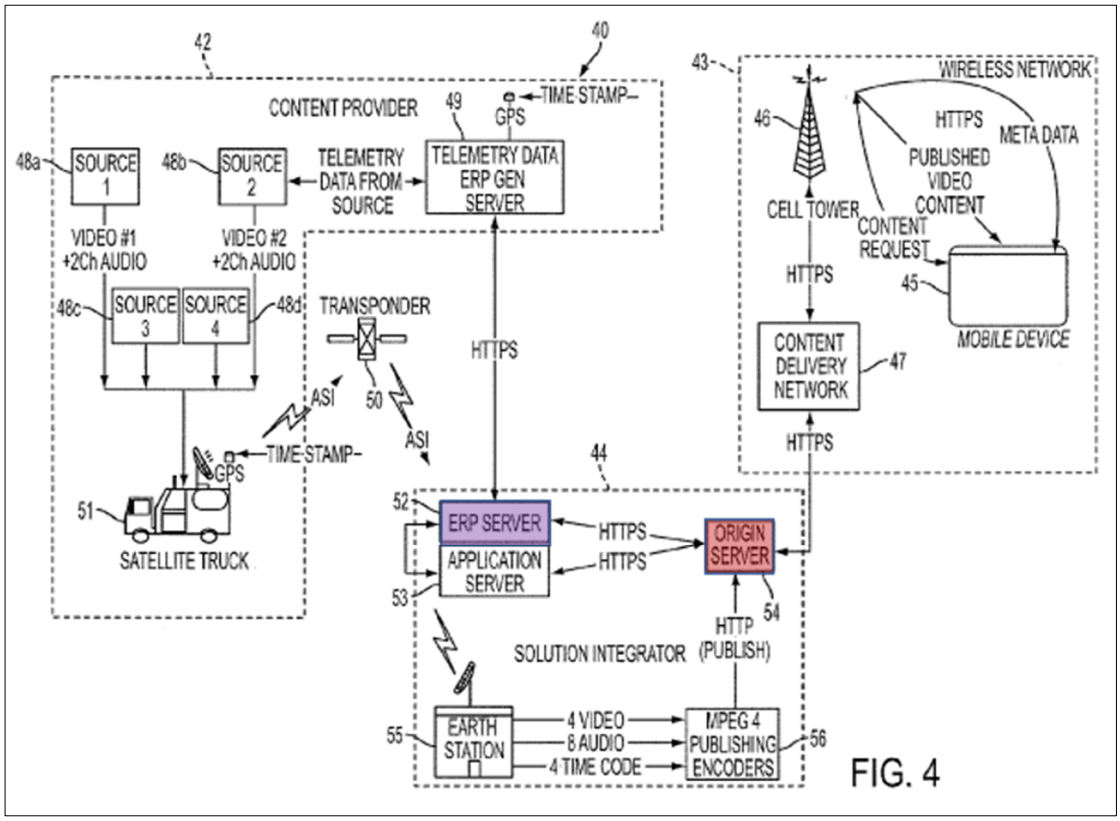

Ex.1015 ¶¶50-51, 83; Fig. 4. As explained above, a POSA would have incorporated Spivey's MQSD into Herzog's Origin Server, to reduce latency. Ex.1001 ¶332; §VIII.C.1.

Like the '088's socket server, Spivey's MQSD is a generic server that contains processors, memory, and communication components. Ex.1017 ¶¶35, 53; Figs. 3, 4. Moreover, for the same purpose as the '088's socket server, the MQSD "receive[s]" and "process[es] live data to provide live data" to "the subscribed connected client devices substantially simultaneously." *Id.* ¶¶36, 96; *see id.* ¶¶45 ("[MQS] device 310 may be a representative example of message queue server 120"); 54 (MQSD is "substantially similar" to "MQS device 310"); 96. To accomplish this, the MQSD receives event data from the LDSD, which just "receive[d] live data:"

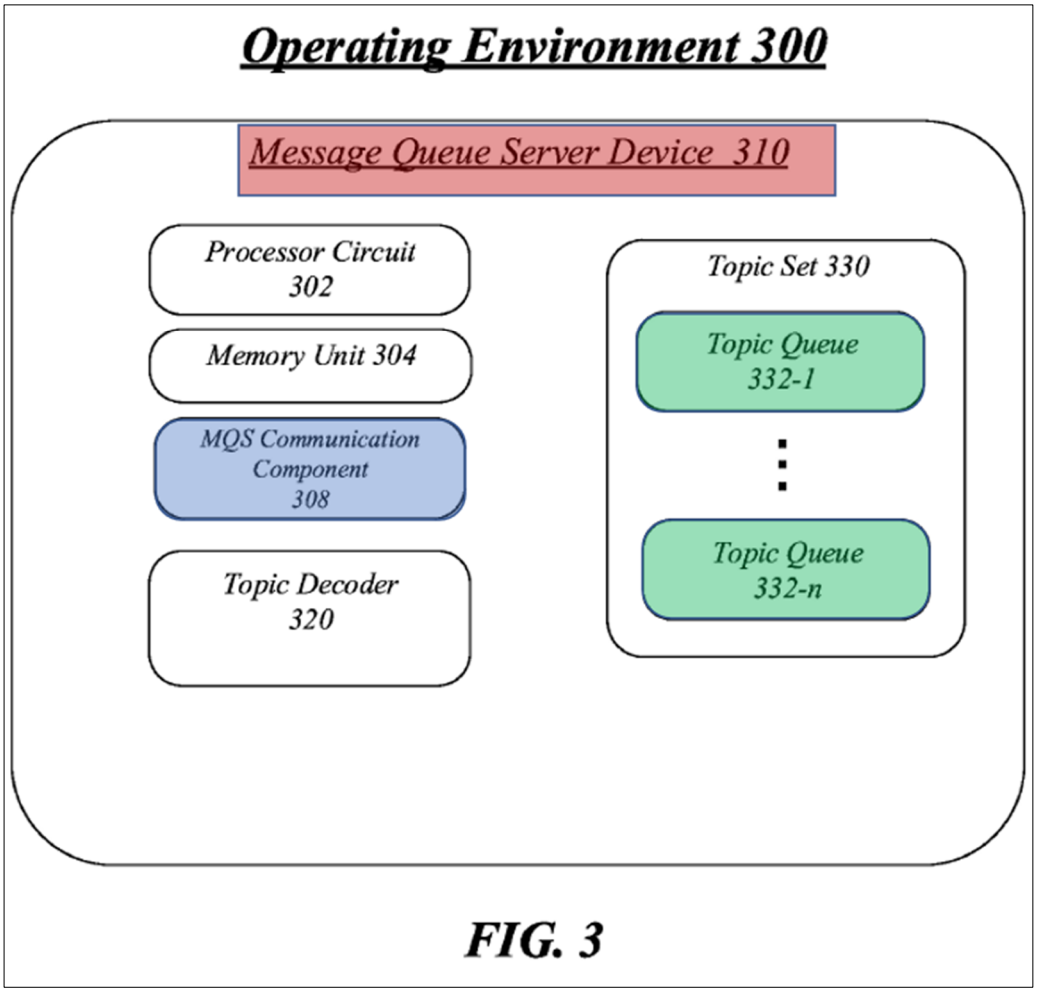

FIG. 3

Id. ¶55; Fig. 3. MQSD contains the MQS communication component which would allow the MQSD to communicate with the ERP Server, as contemplated in Spivey. *See id.* ¶¶46 (communication component 308 transmits and receives data), 54 (communication component 408 is analogous to 308); 55 ("LDS communication component 418 … allows [LDSD] to … transmit the data payloads to [MQSD]."); Ex.1015, Fig. 4; Ex.1001 ¶333.

After receiving the data, the MQSD organizes the received live data "into one or more of a plurality of topic queues" dedicated to storing information about "a specific game." Ex.1017 ¶¶47, 52. After sorting the data into the proper topic queues, the MQSD shares the information "substantially simultaneously" to "the subscribed connected client devices." *Id.* ¶96. Thus, a POSA would have understood that Herzog's ERP server transmitting HTTPS information to Spivey's MQSD as disclosing the '088's socket server being communicatively coupled to a control server. Ex.1001 ¶334.

Further, Herzog's ERP Server "receives the meta-data from ERP generator server 49 in HTTPS communication format" and "acts as an intermediary between the ERP generator server and the origin server." Ex.1015 ¶50. Figure 4 shows that the meta-data is provided to the origin server from the ERP server in HTTPS format:

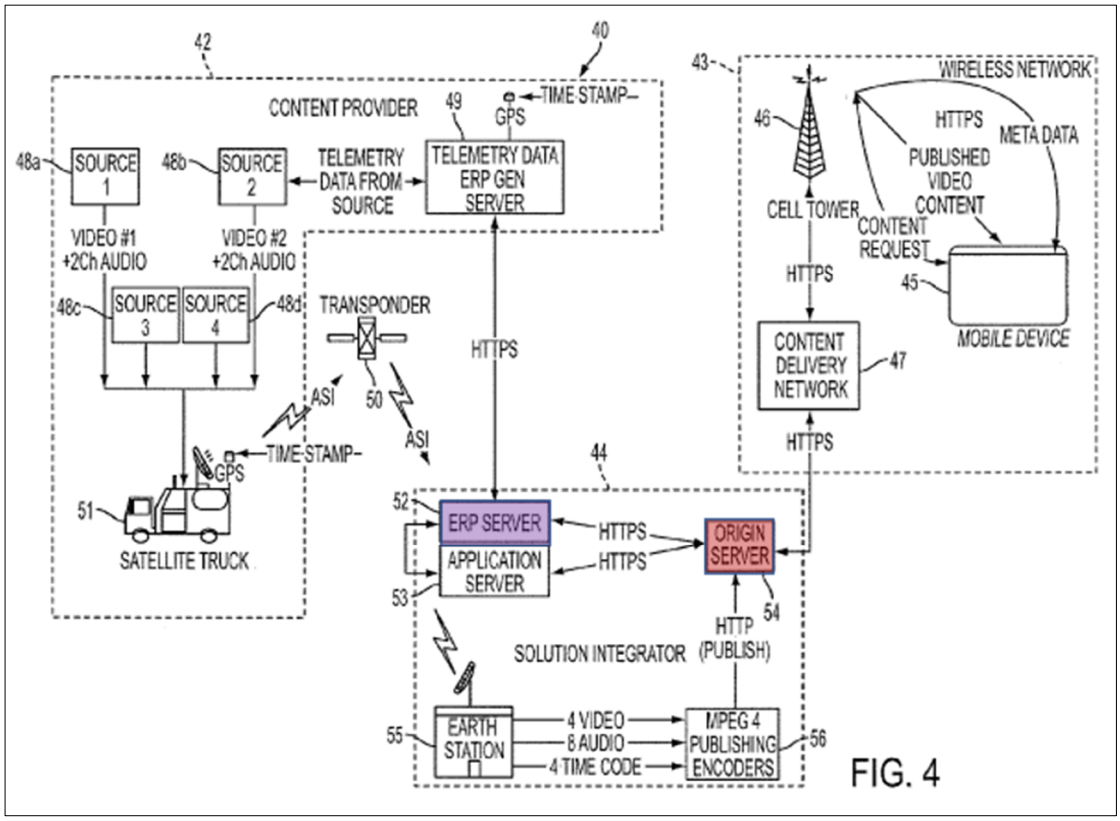

Ex.1015 ¶¶50-51, Fig. 4. Incorporating Spivey's MQSD into Herzog's origin server would thus allow the MQSD (socket server) to receive from the ERP Server (control server) the meta-data provided (first event information). Ex.1001 ¶335. Thus, a POSA would have understood that Herzog/Spivey discloses a socket server receiving from the control server at least the first event information. *Id.*

A POSA would have understood that Spivey's topic queues disclose the '088's event sockets corresponding to the event information germane to the live event. *Id.* ¶336; *see* §VIII.A.2.d.

Both Herzog and Spivey disclose transmitting the first event information to the first VCD of the plurality of VCDs. For example, in Spivey, the MQSD "may

push data from topic queues … to the subscribers of the topics corresponding to those topic queues." Ex.1017 ¶46. In Herzog, the Origin Server may be configured to transmit "the meta-data to the content delivery network 47," which the user receives "in an HTTPS communications protocol." Ex.1015 ¶51. A POSA would have known that the websocket client-server communication protocol employed by Spivey was an alternative to the HTTP polling used by Herzog. Ex.1001 ¶337; §IV.

Herzog/Spivey discloses providing first event information over a separate Internet communication channel. Spivey's entire system is based on providing "live event data in real time." Ex.1017, Abstract. The MQSD can be an "internet server." *See id.* ¶35. Spivey communicates with VCDs over "any … combination of wired and/or wireless networks including … the Internet." *Id.* ¶179. For example, VCDs "may request and participate in a websocket connection," which "typically comprises a two-way connection between two entities." *Id.* ¶¶43, 61. Moreover, consistent with Spivey, Herzog discloses providing event information over a separate communication path than the video signal where there is "a unique video and meta-data source that do not follow the same path of transmission:"

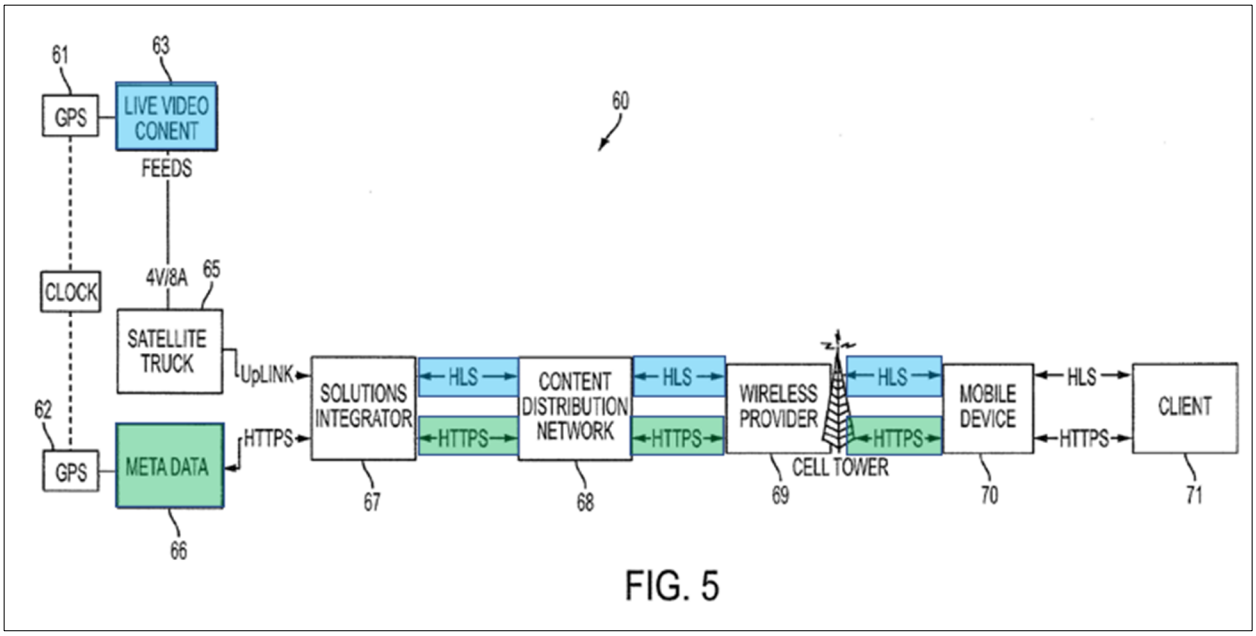

Ex.1015 ¶¶47-51, 83; Figs. 1, 4, 6. Thus, a POSA would have understood Spivey to disclose transmitting first event information via a separate Internet connection. Ex.1001 ¶338.

Further, this information is provided via a connection between a topic queue and the first VCD. Users can access the MQSD using a URL. *See* Ex.1017 ¶¶81-82. Then, the user can access the specific topic queue they wish to receive information from by using a text string, *e.g.*, a topic label or Event ID, associated with a topic queue. *Id.* ¶179; Fig. 9 ("Gamecenter.nfl.ravenssteelers."). Thus, a POSA would have understood that Herzog/Spivey discloses distributing event information from a socket to a user device over an Internet connection. Ex.1001 ¶339. Further, a POSA would have understood that the Internet connection is established using a URL and

text string identifying a uniquely addressable communication endpoint on the MQSD, where first event information is transmitted to a VCD. *Id*.

Furthermore, as explained above, Herzog's application server (webserver) transmits instructions to the VCD to establish an event information communication channel between the VCD and the event socket of the socket server, which is separate and distinct from the communication channel that transmits copies of the audio/video feed. *See* §§VIII.C.1, VIII.C.2.b; Ex.1001 ¶340.

e. Limitation 8.6

As explained above, Herzog's application server transmits instructions to the VCD to establish a communication channel between the socket server and the VCD that provides the event information to be rendered on a VCD's display. *See* §§VIII.C.2.a, VIII.C.2.b, VIII.C.2.d.

As explained above, Herzog renders multiple videos related to the same sporting event in addition to information about the event (meta-data). Ex.1001 ¶¶341-342. *See* §VIII.C.2.b. For example, Herzog's Figure 7 shows "four different videos of a live event and meta-data of multiple parameters" from which a user can select:

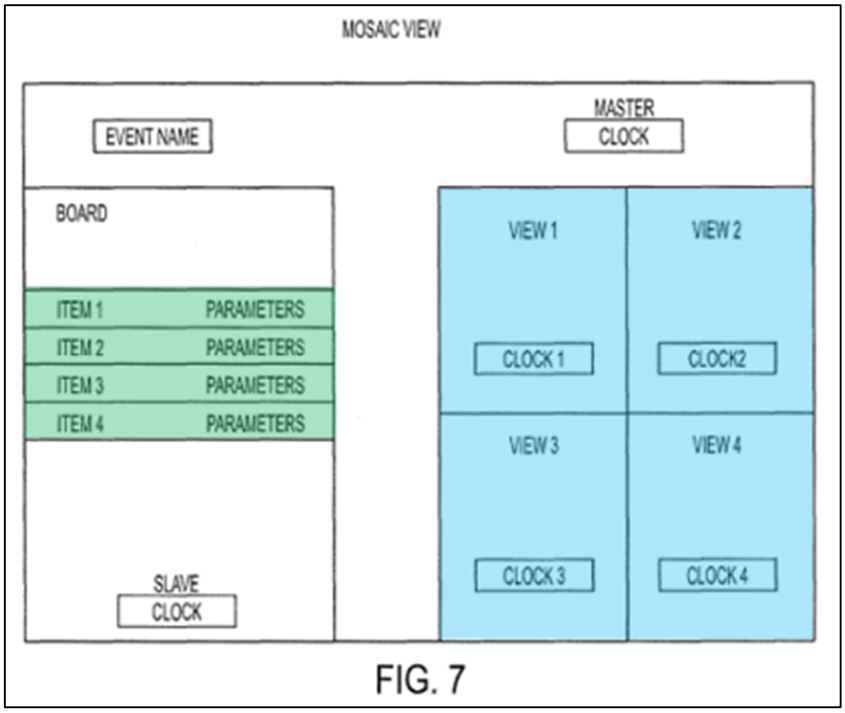

Ex.1015 ¶¶12, 80-81, Fig.7. As shown in Figure 7, the display of the VCD provides the event information adjacent to the video relating to the live event.

To the extent Herzog does not specifically disclose that the event information it presents to users is interactive, *see, e.g.,* Ex.1015 ¶39 ("[u]se of a touchscreen display as part of the user interface enables a user to interact directly with the information presented on the display"), a POSA would have understood that presenting such information as interactive would have been a simple and obvious matter of design choice. Ex.1001 ¶343. Indeed, information provided to users over the Internet has been presented in an interactive manner since the beginning of the Internet. *Id*. Users have been able to click on information provided to them and obtain access to additional, related information, either by being redirected to a different website or application. *Id.* This functionality provides users with a more

dynamic and engaging experience. *Id.* Thus, to the extent Herzog does not specifically disclose that the event information it presents to users is interactive, a POSA would have been motivated to enable such functionality, using known methods, to enhance the user experience. *Id.*

A POSA would have had a reasonable expectation of success in making Herzog's event information interactive because Herzog already enables the flow of event information to users. *Id.* ¶344. Providing Herzog's event information in a manner that allows users to interact with the meta-data would have required only minor programming adjustments that were well within the skill of a POSA. *Id.*

f. Limitation 8.7

See §VIII.C.2.e.

g. Limitation 8.8

This limitation is substantially the same as Limitation 8.3, except that it requires transmitting *second* instructions to a *second* client device that includes a *second* display, and that the second instructions also render the first event information relating to the live event. For the same reasons explained above with respect to Limitation 8.3 and the first instructions, first client device, and first display, and because Herzog discloses transmitting multiple streams of digital content to multiple different users, Herzog discloses this limitation. *See* §§VIII.C.2.a, VIII.C.2.b; Ex.1001 ¶346.

h. Limitation 8.9

As explained above with respect to Limitation 8.5, Herzog/Spivey discloses transmitting instructions to a VCD to cause the VCD to connect to a first event socket of a socket server to receive, on an event information communication channel between the first event socket and the VCD, digital content corresponding to the first event information. *See* §VIII.C.2.d; Ex.1001 ¶347. Limitation 8.9 is substantially the same as Limitation 8.5 but requires another connection between the same first event socket of the socket and a *second* VCD, such that the digital content corresponding to the first event information received by the first VCD and the second VCD is synchronized and client-by-client latency between the two VCDs to render the first event information is mitigated or significantly reduced.

For the same reasons provided above as to Limitation 8.5, and because the combination of Herzog and Spivey enables multiple VCDs to connect to any number of event sockets, this limitation is met. *See* §§VIII.C.2.a, VIII.C.2.b, VIII.C.2.d; Ex.1001 ¶348; Ex.1017 ¶¶78, 81-82.

The Herzog and Spivey combination shares the first event information in a synchronized manner between VCDs that mitigates client-by-client latency. Ex.1001 ¶349. Herzog discloses sharing online gaming information in a "synchronous manner" using a "VITC time stamp" as the "master time for synchronization." Ex.1015 ¶¶16, 58. Because the meta-data is synchronized to the

videos, and the videos are delivered to the VCDs at the same time, the meta-data is necessarily shared in a synchronized manner by the two VCDs. Ex.1001 ¶349.

Spivey also discloses this, as it teaches that "the embodiments discussed herein may reduce [] delay to an order of milliseconds (ms) (e.g., 100ms) or less, providing a significant advantage over the conventional practices." Ex.1017 ¶28. Spivey further teaches that digital content "may be pushed to the subscribed connected client devices substantially simultaneously with . . . a time delay of 100 milliseconds or less." *Id.* ¶96. According to Spivey, "'substantially simultaneously' means that the set of actions execute within the same defined period of time. The defined period of time may be of any length as suitable for a given implementation." *Id.*; Ex.1001 ¶350.

i. Limitation 8.10

This limitation is substantially the same as Limitation 8.6, except that it requires the first event information to be rendered as a user-interactive feature on the display of the *second* VCD. This limitation is met for at least the same reasons as explained for Limitation 8.6. *See* §VIII.C.2.e, *supra;* Ex.1001 ¶351. Herzog discloses a plurality of different communication channels facilitating digital content transmission for the reasons stated above. *See* §§VIII.C.1, VIII.C.2.a, *supra*.

j. Limitation 8.11

This limitation is substantially the same as Limitation 8.7, except that it requires obtaining the claimed access when a user of the *second* VCD selects a portion of the rendered *second* user-interactive feature. This limitation is met for at least the same reasons as explained for Limitation 8.7. *See* §VIII.C.2.f, *supra* Ex.1001 ¶352. Herzog discloses a plurality of different communication channels facilitating digital content transmission for the reasons stated above. *See* §§VIII.C.1, VIII.C.2.a, *supra*.

3. Dependent Claim 11

a. Limitations 11.0-11.2

Herzog discloses the live event is a sporting event, and that the event information is online gaming information/score information. Specifically, Herzog transmits "meta-data" such as "the status of each car and driver in the race" and may include "lap number, car speed and acceleration" but there may be as many as "50 different parameters that are available." Ex.1015 ¶45; *see also id.* ¶16 (streams originate from a "sports venue."). A POSA would have understood such parameters to include online gaming information and/or score information. Ex.1001 ¶353.

4. Dependent Claim 12

a. Limitations 12.0-12.2

See §VIII.C.3.a.

D. Ground 2B: Claims 9, 10, and 13-23 Are Obvious Over Herzog in View of Spivey and Abulikemu

1. Motivation to Combine

The motivation to combine Herzog with Spivey is discussed above. *See* §VIII.C.1. A POSA would have further been motivated to combine Herzog and Spivey with Abulikemu. Ex.1001 ¶¶147-151.

Given that the concept of a composite stream is an obvious and well-known implementation of the combination of Herzog and Spivey, a POSA would have been motivated to configure Herzog and Spivey's system to enable the delivery of composite outgoing streams to improve the way end-users can view and participate in broadcasts of live events. *Id.*; Ex.1050 ¶¶9-10.

Like Herzog, Abulikemu teaches a live streaming system configured to provide live video content about an event to multiple users over the Internet. Ex.1050 ¶¶1, 11-16, 23-24, Abstract, Fig. 1.

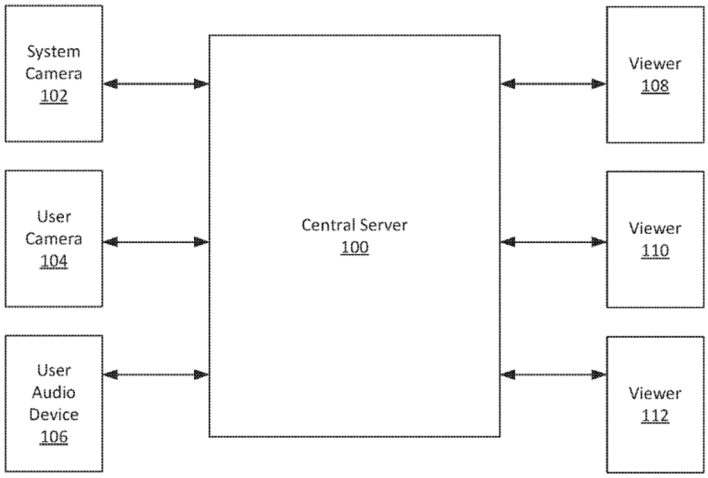

FIG. 1

Abulikemu states that "[t]raditionally, live video of an event such as a soccer game is provided by a single broadcasting company," which "does not allow the viewers to participate in the filming, editing, or any other part of broadcasting the event." Ex.1050 ¶2. To expand the way users can view and participate in broadcasts of live events, Abulikemu configured its broadcasting system to "allow[] incorporation of user-generated content such as user videos of a live event and user commentary (audio and/or video) about the live event." *Id.* ¶10. According to Abulikemu, this feature "provide[s] a way for a viewer to customize the video/audio feed of an event rather than having no choice but to accept the feed provided by the broadcasting company." *Id.*

Specifically, Abulikemu's system includes a central server 100 (*e.g.*, a "media source") that receives a live audio/video stream of an event from a system camera 102. *Id.* ¶¶11-16. The central server 100 provides copies of the live audio/video stream to multiple viewers 108, 110, 112. *Id.* ¶¶11-16. Any viewer receiving the stream may then provide their own video/audio commentary about the event and send it back to the central server. *Id.* ¶¶11-16, 21-24, Fig. 2. The central server compiles the live stream and the user's commentary then streams the compiled stream to any viewer that chooses to receive the compiled stream. *Id.* ¶¶11-16, 21-24, Fig. 2.

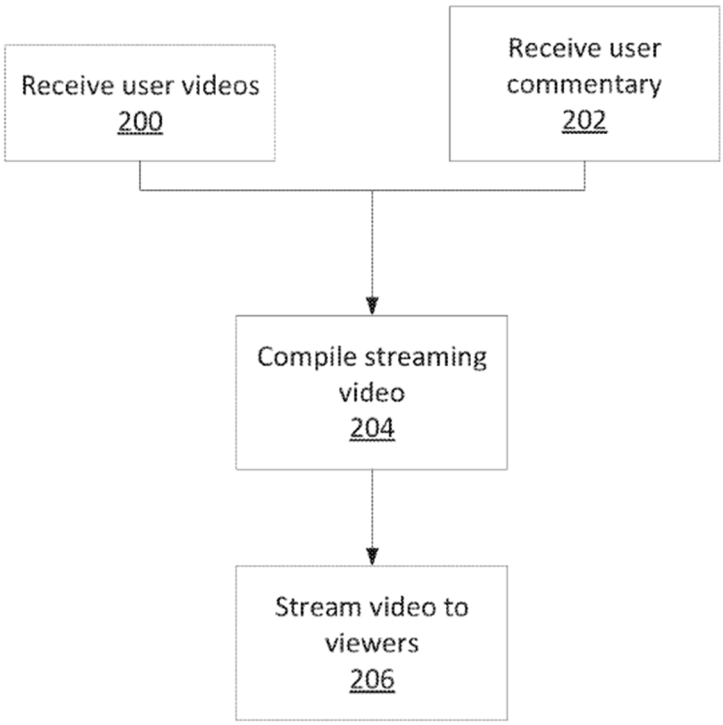

FIG. 2

A POSA would have been motivated to configure Herzog/Spivey to provide for and implement composite outgoing streaming, as taught by Abulikemu. Herzog recognizes the value of user interactivity and engagement during the live stream process. Ex.1001 ¶151; Ex.1015 ¶39. Moreover, for a POSA, providing composite outgoing stream functionality to a system such as Herzog/Spivey, which already provides all the system architecture allowing multiple live streams to be sent to clients, applies a known technique to a known device that was ready for improvement to yield a predictable result. Ex.1001 ¶151. And a POSA would have had a reasonable expectation of success in providing composite outgoing stream functionality because Herzog already provides the necessary underlying system

architecture, and programming the existing structures to obtain this functionality would have been a simple engineering task well-within the skill of a POSA. *Id.*; *see* §VII.B.

2. Dependent Claim 9

a. Limitations 9.0-9.1

Abulikemu discloses media sources, *e.g.*, central server 100, configured to receive from the first VCD, *e.g.,* viewer 108, a composite outgoing stream of the audio/video feed and additional video content. *See* §VIII.D.1; Ex.1050 ¶¶11-16, 21-24, Fig. 2.

b. Limitation 9.2

Abulikemu discloses media sources, *e.g.*, central server 100, configured to provide a first copy of the composite outgoing stream of the audio/video feed and the additional video content from a second media server endpoint of the at least one media source. *See* §VIII.D.1; Ex.1050 ¶¶11-16, 21-24, Fig. 2. For the same reasons explained above with respect to Herzog, a POSA would have understood that Abulikemu also uses Internet address/endpoints to designate the location from which VCDs can receive requested content. Ex.1001 ¶368; §VIII.C.2.a. Likewise, a POSA would have also understood that Abulikemu uses other distinct Internet address/endpoints to designate the location from which the VCDs can receive the requested composite outgoing stream. Ex.1001 ¶368.

c. Limitations 9.3-9.4

As explained above, Herzog's application server (webserver) is configured to facilitate connections between VCDs and the media sources and between VCDs and the socket server. *See* §VIII.C.2.b. A POSA would have found it obvious to further utilize the webserver to facilitate a connection between the second VCD and the second media server endpoint to provide the first copy of the composite outgoing stream to the second VCD. Ex.1001 ¶369. A POSA would have had a reasonable expectation of success in doing so as it would have involved simply using the same known webserver to facilitate yet another connection. *Id.*

As explained above, a POSA would have understood that the known webserver transmits instructions to the VCD to establish video communication channels between the media source and the VCD, and to establish event information communication channels between an event socket of the socket server and the VCD. *See* §§VIII.C.2.b, VIII.C.2.g; Ex.1001 ¶370.

3. Dependent Claim 10

a. Limitations 10.0-10.1

As explained above, RTMP and HLS were well-known data transmission protocols available at least by 2012. *See* §VIII.B.3.a. Indeed, Herzog discloses media sources including an HLS server. Ex.1015 ¶¶49-51, 55, 83. As discussed above, use of an RTMP server and/or and HLS server was well known, and use of those servers was a mere matter of design choice that was well within the purview and capabilities

of a POSA. Ex.1001 ¶371. Herzog's disclosure of use of an HLS server demonstrates that capability and it would have likewise been well-within the knowledge of a POSA to utilize the known RTMP transmission protocol to execute the desired streaming functionality. *Id.* Moreover, leveraging the benefits of RTMP by integrating the protocol into Herzog would have been a simple and obvious matter of design choice. *Id.*

b. Limitation 10.2

Herzog discloses the first media server endpoint is coupled to the HLS server. *See* §§VIII.C.2.a, VIII.D.3.a.

c. Limitation 10.3

As explained above, it would have been a simple and obvious matter of design choice to incorporate an RTMP server into Herzog's media sources, which already include an HLS server. *See* §VIII.D.3.a; Ex.1001 ¶373. Moreover, a POSA would have understood that implementing that design included configuring the RTMP server to receive live event data and sending the data to the HLS server. Thus, in employing the RTMP and HLS protocols in Herzog's system, a POSA would have configured the audio/video feed of the live event to transmit a first HLS copy of the audio/video feed of the live event from the RTMP server to the HLS server. Ex.1001 ¶373 (citing Ex.1051, 6:44-59, 18:6-67, 19:34-44, Fig. 5).

d. Limitation 10.4

Herzog discloses the HLS server is configured to provide the first copy of the audio/video feed of the live event as another HLS copy from the first media server endpoint. *See* §§VIII.C.2.a, VIII.D.3.a.

4. Independent Claim 13

a. Limitations 13.0-13.2

Herzog discloses these limitations for the same reasons stated above. *See* §VIII.C.2.a.

b. Limitation 13.3

Herzog/Abulikemu discloses this limitation for the same reasons stated above. *See* §VIII.D.2.a.

c. Limitation13.4

Herzog/Abulikemu discloses this limitation for the same reasons stated above. *See* §VIII.D.2.b.

d. Limitation 13.5

Herzog discloses this limitation for the same reasons stated above. *See* §§VIII.C.2.b, VIII.C.2.g, VIII.D.2.c.

e. Limitation 13.6

Herzog/Abulikemu discloses this limitation for the same reasons stated above. *See* §VIII.D.2.c.

f. Limitation 13.7

To the extent this limitation can be understood, *see* §VIII.B.4.f, it is disclosed by Herzog/Abulikemu for the same reasons stated above. *See* §§VIII.C.2, VIII.D.2; *see also* §VIII.B.4.f (obvious design choice).

g. Limitation 13.8

Herzog/Spivey discloses this limitation for the same reasons stated above. *See* §VIII.C.2.d.

h. Limitation 13.9

To the extent this limitation can be understood, *see* §VIII.B.4.h, it is disclosed by Herzog/Spivey for the same reasons stated above. *See* §§VIII.C.2.d, VIII.C.2.e; *see also* §VIII.B.4.h (obvious design choice).

5. Dependent Claim 14

a. Limitations 14.0-14.1

These limitations are obvious over Herzog for the same reasons stated above. *See* §VIII.D.3.a.

b. Limitation 14.2

This limitation is obvious over Herzog for the same reasons stated above. *See* §VIII.D.3.c.

c. Limitation 14.3

This limitation is obvious over Herzog for the same reasons stated above. *See* §VIII.D.3.d.

6. Dependent Claim 15

a. Limitations 15.0-15.1

Herzog/Spivey discloses these limitations for the same reasons stated above. *See* §§VIII.C.2.g, VIII.C.2.h, VIII.C.2.j.

7. Dependent Claim 16

a. Limitations 16.0-16.2

Herzog discloses these limitations for the same reasons stated above. *See* §VIII.C.3.a.

8. Dependent Claim 17

a. Limitations 17.0-17.2

Herzog discloses these limitations for the same reasons stated above. *See* §VIII.C.4.a.

9. Dependent Claim 18

a. Limitation 18.0-18.2

Herzog/Spivey discloses these limitations for the same reasons stated above. *See* §§VIII.C.2.g, VIII.C.2.h.

10. Dependent Claim 19

a. Limitation 19.0

Herzog discloses this limitation for the same reasons stated above. *See* §VIII.C.2.b.

b. Limitation 19.1

Herzog/Abulikemu discloses this limitation for the same reasons stated above. *See* §§VIII.C.2, VIII.D.2; VIII.D.4.

11. Dependent Claim 20

a. Limitations 20.0-20.2

Herzog/Spivey/Abulikemu discloses these limitations for the same reasons stated above. *See* §§VIII.D.4, VIII.D.9, VIII.D.10.

b. Limitation 20.3

Herzog/Spivey/Abulikemu discloses this limitation for the same reasons stated above. *See* §§VIII.D.4, VIII.D.9, VIII.D.10.

12. Dependent Claim 21

a. Limitations 21.0-21.1

Herzog discloses these limitations for the same reasons stated above. *See* §§VIII.C.2.f, VIII.C.2.j.

b. Limitation 21.2

Herzog discloses this limitation for the same reasons stated above. *See* §§VIII.D.12.a, VIII.C.2.f, VIII.C.2.j.

13. Dependent Claim 22

a. Limitations 22.0-22.2

Herzog discloses these limitations for the same reasons stated above. *See* §§VIII.C.3.a, VIII.D.7.a.

14. Dependent Claim 23

a. Limitations 23.0-23.2

Herzog discloses these limitations for the same reasons stated above. *See* §§VIII.C.4.a, VIII.D.8.a.

IX. SECONDARY CONSIDERATIONS OF NON-OBVIOUSNESS

Petitioner is unaware of any evidence of secondary considerations that have a nexus to the claimed inventions that would overcome the Petition's showing of obviousness. Ex.1001 ¶418. Indeed, the sheer number of "[i]ndependently made, simultaneous inventions, made within a comparatively short space of time, are persuasive" "indicia of obviousness." *Geo. M. Martin Co. v. Alliance Machine Sys. Int'l. LLC*, 618 F.3d 1294, 1302-1305 (Fed. Cir. 2010) (quotations omitted).

X. THE BOARD SHOULD NOT EXERCISE DISCRETIONARY DENIAL

A. *General Plastic*

The '088 has not been subject to any prior IPR or PGR petitions by the current Petitioner. Furthermore, there is no "significant relationship" between the prior Petitioner (Genius) and the present Petitioner (Sportradar). *Videndum Production Solutions, Inc. v. Rotolight Limited*, IPR2023-01218, Paper 12 (PTAB April 19, 2024). *See also*, *supra* at 1; *Petitioner's Reasons for Parallel Petitions and Petition Ranking* filed concurrently herewith. Thus, there is no basis for the Board to exercise its discretion to deny the Petition under 35 U.S.C. §314(a) and 37 C.F.R. §42.108(a).

General Plastic Indus. Co. v. Canon Kubushiki Kaisha, IPR2016-01357, Paper 19 (PTAB Sept. 6, 2017).

B. *Fintiv*

Evaluation of the factors under *Apple Inc. v. Fintiv, Inc.*, IPR2020-00019, Paper 11 (PTAB Mar. 20, 2020) (precedential) and further in light of the clarifications made by the Director of the USPTO favors institution. *See* Ex.1013 ("June 21, 2022 Director's Memo"), 2.

First, Petitioner has simultaneously stipulated to PO that if this IPR is instituted, Petitioner will not pursue invalidity on the specific grounds raised here or on any other ground that reasonably could have been raised in this IPR. Ex.1053; *Sotera Wireless, Inc. v. Masimo Corp.*, IPR2020-01019, Paper 12 at 13-14 (PTAB Dec. 1, 2020) (precedential). Based on this stipulation alone, discretionary denial under §314(a) is not appropriate. Ex.1013, 3.

Moreover, this Petition presents "compelling" arguments for unpatentability of the Challenged Claims, including a strong case for obviousness applying prior art either not of record (Herzog) or substantively considered by the Examiner (Ellis). This too weighs against the Board exercising its discretion under §314(a). *See* Ex.1013, 4-5.

For at least the reasons set forth above, the Board should decline to exercise its discretion to deny institution under §314(a).

C. *Advanced Bionics*

Section 325(d) denial would be improper because this Petition presents new prior art, ground, and arguments not previously considered by the Office. *Advanced Bionics, LLC v. Med-El Elekromedizinische Geräte GMBH*, IPR2019-01469, Paper 6 (PTAB Feb. 13, 2020), and *Becton, Dickinson and Co. v. B. Braun Melsungen AG,* IPR2017-01586, Paper 8 (PTAB Dec. 15, 2017). Further, to the extent that the same art was considered by the Office, the Examiner committed material error in failing to consider the prior art in combination with the previously undisclosed art contained in this Petition.

1. The Examiner Did Not Properly Consider Ellis During Prosecution

This Petition presents different art than that considered by the Examiner during prosecution. In determining whether discretionary denial is appropriate, the PTAB first looks to (i) the similarities and material differences between the asserted art and the prior art previously evaluated; (ii) the cumulative nature of the asserted art and the prior art previously evaluated; and (iii) the extent of the overlap between the arguments made during examination and the manner of reliance on the prior art in determining whether the same or substantially the same art or arguments were presented to the office. *See Becton, Dickinson*, *6-*8; *Advanced Bionics*, *4.

Under *Advanced Bionics* step 1, beyond the Examiner signing an IDS listing Ellis ’318 as one of 80 references, the Examiner did not substantively address Ellis

’318 in any correspondence with the applicant, nor cite it in any rejection, prior to issuing a Notice of Allowance. As such, Ellis was not substantively “considered” during the prosecution of the ’088 and discretionary denial is inappropriate.

2. The Examiner Erred in Failing to Consider Ellis in Combination with Other Prior Art

Under *Advanced Bionics* step 2, the PTAB must consider (i) the extent to which the asserted art was evaluated during examination; (ii) whether the petitioner sufficiently explained how the Examiner erred in evaluating the prior art; and (iii) the extent to which additional evidence and facts presented warrant reconsideration of the prior art or arguments in determining whether the Office committed material error. *See Advanced Bionics*, *4.

Here, it is clear that the Office made a material error by not using Ellis in a rejection of any claim. Assuming, *arguendo*, that Ellis was substantively considered by the Office during prosecution, the combination of Ellis with other prior art such as Spivey and Abulikemu was not considered by the Office during prosecution. As shown above in Section VIII, Ellis in view of Spivey and Abulikemu—neither of which were before the Examiner during prosecution—renders obvious the alleged allowable subject matter. Ellis does not explicitly disclose some of the ’088’s backend architecture for establishing the connections with user devices and data delivery (*i.e.,* a socket server), nor does it explicitly disclose a composite outgoing stream functionality. However, a POSA would have found it obvious to integrate

this known, generic component (a socket server) into Ellis, as taught by Spivey, to implement Ellis's content delivery system with reduced latency. A POSA would have also found it obvious to configure Ellis to include composite outgoing stream functionality, as taught by Abulikemu, to expand the way in which users can view and participate in broadcasts of live events. As such, the claimed invention is rendered obvious by Ellis in view of those two references—a combination that the Examiner never had the opportunity to consider. Even if Ellis was considered during the prosecution, the Office committed material error by mis-appreciating its significance when combined with other art that was available but not identified in the prosecution history.

XI. CONCLUSION

For the foregoing reasons, Petitioner respectfully requests that the Board institute IPR and cancel the Challenged Claims.

Date: February 24, 2025

Respectfully submitted,

/Scott Cummings/

Scott W. Cummings
Reg. No. 41,567
BRYAN CAVE LEIGHTON PAISNER LLP
scott.cummings@bclplaw.com

Alexander Walden
Provisionally recognized PTAB attorney
(affidavit to follow)

BRYAN CAVE LEIGHTON PAISNER LLP
alexander.walden@bclplaw.com

Frank Fabiani
Reg. No. 75,934
BRYAN CAVE LEIGHTON PAISNER LLP
frank.fabiani@bclplaw.com

Attorneys For Petitioner Sportradar AG

CERTIFICATE OF COMPLIANCE

This Petition complies with the type-volume limitations as mandated in 37 C.F.R. §42.24. According to the word processing system used to prepare this document, the brief contains 13,591 (14,000 limit) words.

/Scott W. Cummings/

CERTIFICATE OF SERVICE

In compliance with 37 C.F.R. §§42.105, 42.6(e), the undersigned hereby certifies that a copy of the foregoing Petition, supporting exhibits, and Power of Attorney were served on the 24th day of February, 2025, via Federal Express® directed to PO at the correspondence address of record:

149890 - Smith Baluch LLP
376 Boylston St,
Suite 401
Boston, MA 02116

A courtesy copy was also served by electronic mail on PO's counsel of record in the Texas litigation:

Britton F. Davis
KING & SPALDING LLP
1401 Lawrence Street
Suite 1900
Denver, CO 80202
(720) 535-2300
bfdavis@kslaw.com

Christopher C. Campbell
KING & SPALDING LLP
1700 Pennsylvania Avenue, NW
Suite 200
Washington, DC 20006
(202) 626-5578
ccampbell@kslaw.com

Ryan A. Schmid
KING & SPALDING LLP
1700 Pennsylvania Avenue, NW
Suite 200
Washington, DC 20006
(202) 626-5578
rschmid@kslaw.com

Matthew D. Wood
KING & SPALDING LLP
500 West 2nd Street
Suite 1800
Austin, TX 78701
(512) 457-2000
mwood@kslaw.com

/Teresa C. Rodriguez/

TABLE OF EXHIBITS[4]

Exhibit No.	Description
Exhibit 1001	Declaration of Dr. Omid Kia, Ph.D.
Exhibit 1002	*Curriculum Vitae* of Dr. Omid Kia, Ph.D.
Exhibit 1003	U.S. Patent No. 10,805,687
Exhibit 1004	Reserved
Exhibit 1005	Reserved
Exhibit 1006	U.S. Patent No. 10,425,697
Exhibit 1007	Reserved
Exhibit 1008	Reserved
Exhibit 1009	U.S. Patent No. 11,039,218
Exhibit 1010	Reserved
Exhibit 1011	Reserved
Exhibit 1012	U.S. Patent No. 11,871,088
Exhibit 1013	Director Vidal Memorandum re: *Sotera* Stipulations
Exhibit 1014	SportsCastr's Complaint for Patent Infringement against Genius Sports (October 5, 2023)
Exhibit 1015	U.S. PGPub No. 2015/0163379 ("Herzog")

[4] Unless otherwise specified, citations are to the original page, column, and line numbers in exhibits. Brackets ([]) are used to refer to the sequential page numbers added to exhibits pursuant to 37 C.F.R. §42.63(d)(2)(i).

Exhibit 1016	U.S. PGPub 2014/0229992 ("Ellis")
Exhibit 1017	U.S. PGPub 2016/0036910 ("Spivey")
Exhibit 1018	U.S. PGPub 2015/0163379 ("Mitic")
Exhibit 1019	Reserved
Exhibit 1020	Reserved
Exhibit 1021	Reserved
Exhibit 1022	James F. Kurose & Keith W. Ross, *Application Layer*, in Computer Networking A Top-Down Approach (Michael Hirsch et al. eds., 4th ed. 2012) ("Kurose I")
Exhibit 1023	Reserved
Exhibit 1024	Mário Marques da Silva, Multimedia Communications and Networking (2012) ("Silva")
Exhibit 1025	*A Brief History of the Internet*, ONLINE LIB. LEARNING CENTER. (Feb. 9, 2024), https://www.usg.edu/galileo/skills/unit07/internet07_02.phtml ("Online Library")
Exhibit 1026	Hisayuuki Ohmata et al., *Hybridcast: A new media experience by integration of broadcasting and broadband*, 2013 ITU Kaleidoscope: Building Sustainable Communities, April 2013 ("Ohmata")
Exhibit 1027	Henning Schulzrinne et al., *RTP: A Transport Protocol for Real-Time-Applications*, DataTracker (January 1996), https://datatracker.ietf.org/doc/html/rfc1889 ("Schulzrinne")
Exhibit 1028	Brijesh Kumar, *Making Sense of Video Streaming Protocols*, LinkedIn. (Aug. 11, 2016), https://www.linkedin.com/pulse/making-sense-video-streaming-protocols-dr-brijesh-kumar/ ("Kumar")
Exhibit 1029	Ian Fette & Alexey Melnikov, *The WebSocket Protocol*, RFC Editor. (Dec. 2016), https://www.rfc-editor.org/rfc/rfc6455.html.

Exhibit 1030	Marcin Warczygłowa, *Real-time Web Application with Websockets and Vert.X* (Nov. 10, 2015), https://blog.allegro.tech/2015/11/real-time-web-application-with-websockets-and-vert-x.html.
Exhibit 1031	Randall Stewart & Chris Metz, *SCTP: new transport protocol for TCP/IP*, 5 IEEE 64, (2001) ("Stewart")
Exhibit 1032	Lydon Ong, John Yoakum &, *An Introduction to the Stream Control Transmission Protocol (SCTP)*, Datatracker. (May. 2002), https://datatracker.ietf.org/doc/rfc3286/ ("Ong")
Exhibit 1033	Jan Newmarch, *Introduction to Stream Control Transmission Protocol*, LINUX J. (Sep. 1, 2007), https://www.linuxjournal.com/article/9748 ("Newmarch")
Exhibit 1034	Kyung-Hoe Kim et al, *A transmission control SCTP for real-time multimedia streaming*, 54 Computer Networks 1418, (2010) ("Kim")
Exhibit 1035	High Scalability, *How Facebook Live Streams to 800,000 Simultaneous Viewers*, ByteByteGo (Jun. 27, 2016), https://blog.bytebytego.com/?utm_source=hs&utm_medium=ann&utm_campaign=top ("ByteGo")
Exhibit 1036	Hardeep Singh Parmar & Michael C. Thornburgh, *Adobe's Real Time Messaging Protocol*, Veriskope. (Dec. 21, 2002) ("Parmer")
Exhibit 1037	Ilya Grigorik, *WebRTC*, in High Performance Browser Networking, (2013) ("Grigorik")
Exhibit 1038	Sam Dutton, *Get started with WebRTC*, web.dev. (Jul. 23, 2012), https://web.dev/articles/webrtc-basics ("Dutton")
Exhibit 1039	Andy Salo, *MPEG DASH: A Technical Deep Dive and Look at What's Next*, RGB Networks, (2012) ("Salo")
Exhibit 1040	Jan Ozer, *Upstream, Justin.tv, Livestream, and Bambuser: Streaming Unplugged*, Streaming Media Magazine., Jun.-Jul. 2012 ("Ozer")
Exhibit 1041	Christopher Mueller, *MEPG-DASH vs. Apple HLS vs. Microsoft Smooth Streaming vs. Adobe HDS*, BITMOVIN. (Mar. 29, 2015), https://bitmovin.com/mpeg-dash-vs-apple-hls-vs-microsoft-smooth-streaming-vs-adobe-hds/ ("Mueller")

Exhibit 1042	Stefan Saroiu et al., *An analysis of Internet Content Delivery Systems*, ACM SIGOPS Operating System Review, Vol. 36 (Dec. 31, 2002), https://doi.org/10.1145/844128.84415 ("Saroiu")
Exhibit 1043	Charles Marion & Julien Jomier, *Real-time Collaborative Scientific WebGL Visualization with Websocket*, Ass'n Computing Machinery, August 4-5, 2012 ("Marion")
Exhibit 1044	Mark Sweney, *First ads appear on YouTube Clips*, The Guardian, Aug. 22, 2007 ("Sweney")
Exhibit 1045	Richard Sandomir, *The Innovation That Grew and Grew*, N.Y. Times, June 12, 2014 ("Sandomir")
Exhibit 1046	Victoria Pimentel & Bradford G. Nickerson, *Communicating and Displaying Real-Time Data with WebSocket*, 16 IEEE (2012) ("Pimentel")
Exhibit 1047	Reserved
Exhibit 1048	Claim Listing of U.S. Patent No. 11,871,088
Exhibit 1049	Certified File History of U.S. Patent No. 11,871,088
Exhibit 1050	U.S. PGPub 2018/0367820 ("Abulikemu")
Exhibit 1051	U.S. Patent No. 9,973,785 ("Yang")
Exhibit 1052	James F. Kurose & Keith W. Ross, *Computer Networking: A Top-Down Approach* (Michael Hirsch et al. eds., 6th ed. 2013) ("Kurose II")
Exhibit 1053	Sportradar's proposed *Sotera* Stipulation to SportsCastr ("*Sotera* Stipulation")
Exhibit 1054	U.S. PGPub 2018/0167427 ("Kedenburg")
Exhibit 1055	Nick Wingfield, *What's Twitch? Gamers Know, and Amazon Is Spending $1 Billion on It*, N.Y. Times, August 25, 2014 ("Wingfield")

Exhibit 1056	Luigi Lo Iacono & Silvia Santano Guillen, *Web-native Video Live Streaming*, WEB 2014: The Second International Conference on Building and Exploring Web Based Environments, April 2014 ("Iacono")
Exhibit 1057	SportsCastr's Preliminary Infringement Contentions, Exhibit 8 (September 25, 2024)
Exhibit 1058	Arini, ST, MT, *Ch 6 Multimedia Distribution,* https://www.slideserve.com/tassos/ch-6-multimedia-distribution (October 11, 2014) ("Arini")
Exhibit 1059	SportsCastr's Second Amended Complaint for Patent Infringement against Genius Sports (September 25, 2024)
Exhibit 1060	Declaration of Stephen B. Wicker, dated December 6, 2024, filed as Exhibit 1001 in IPR2025-00251 and IPR2025-00252 ("Wicker Declaration")
Exhibit 1061	Comparison of the Declaration of Dr. Omid Kia, Ph.D. (Ex. 1001) with the Wicker Declaration (Ex. 1060)