US007207181B2

(12) **United States Patent**
Murray et al.

(10) **Patent No.: US 7,207,181 B2**
(45) **Date of Patent: Apr. 24, 2007**

(54) **REFRIGERATION UNIT CONDENSATION PREVENTION**

(75) Inventors: **Brent W. Murray**, Longmont, CO (US); **Patrick M. Bertsch**, Thornton, CO (US); **Robert A. Majzner**, Broomfield, CO (US)

(73) Assignee: **Bradley W. Geuke**, Ault, CO (US)

(*) Notice: Subject to any disclaimer, the term of this patent is extended or adjusted under 35 U.S.C. 154(b) by 129 days.

(21) Appl. No.: **11/069,378**

(22) Filed: **Mar. 1, 2005**

(65) **Prior Publication Data**

US 2006/0196206 A1 Sep. 7, 2006

(51) **Int. Cl.**
A47F 3/04 (2006.01)

(52) **U.S. Cl.** **62/150**; 62/176.6; 62/248; 62/275

(58) **Field of Classification Search** 62/150, 62/176.2, 176.6, 248, 275
See application file for complete search history.

(56) **References Cited**

U.S. PATENT DOCUMENTS

3,939,666 A 2/1976 Bashark
4,127,765 A 11/1978 Heaney
4,261,179 A * 4/1981 Dageford 62/150
4,862,701 A * 9/1989 Small et al. 62/150
5,778,147 A 7/1998 Kim
5,778,689 A 7/1998 Beatenbough
5,899,078 A 5/1999 Mager
6,301,913 B1 * 10/2001 Schulak et al. 62/248
6,470,696 B1 10/2002 Palfy et al.
6,550,261 B1 4/2003 Shima et al.
2004/0050072 A1 3/2004 Palfy et al.

OTHER PUBLICATIONS

Door Miser Model XP; Door Miser LLP; Advertising Flyer; Publication date unknown.
Save Money by Taking Control; Door Miser LLP; WWW. Doormiser.com; Advertising Flyer; Publication Date unknown.
New Door Miser XP; pp. 1-5 from WWW.Doormiser.com; Publication Date Unknown.

* cited by examiner

Primary Examiner—William E. Tapolcai
(74) *Attorney, Agent, or Firm*—Harold A. Burdick

(57) **ABSTRACT**

Apparatus, systems and methods are disclosed for efficient elimination of door and frame condensation at widely utilized commercial freezer/refrigeration display cases. The apparatus includes a local controller unit connected with an array of case sensors including an internal case temperature sensor, an external case frame temperature sensor and a dew point sensor. The case frame temperature sensor and dew point sensor are housed to thermally isolate sensing elements thereof from effects of frame temperature changes and ambient air temperature in the vicinity of a sensing element, and to limit heat transfer by the housing to the sensing elements thereby improving sensing accuracy and apparatus performance.

20 Claims, 29 Drawing Sheets

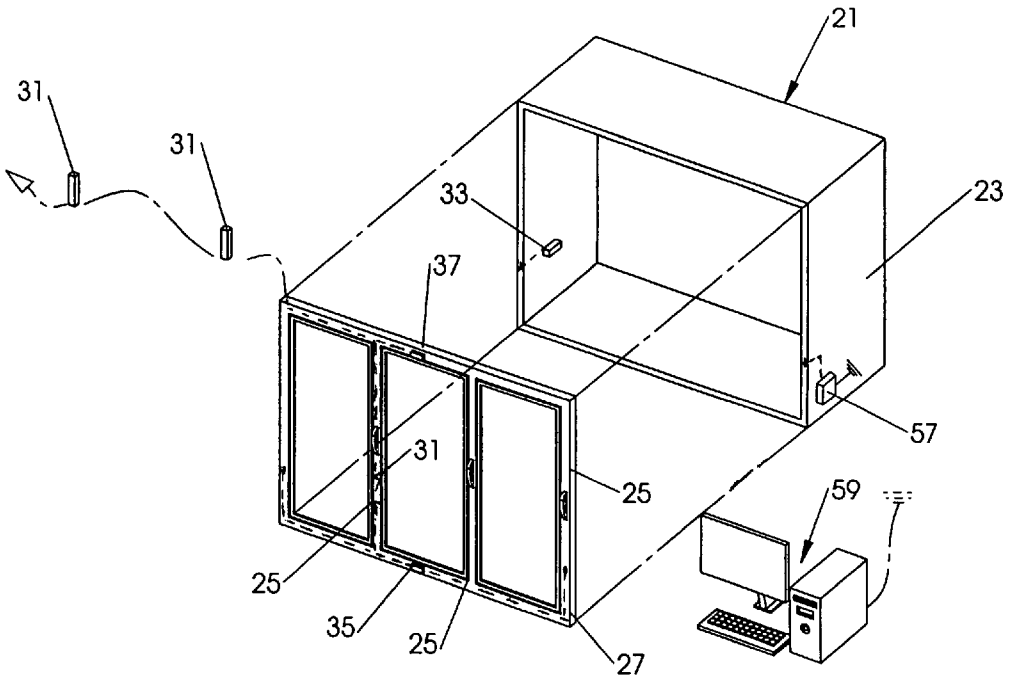

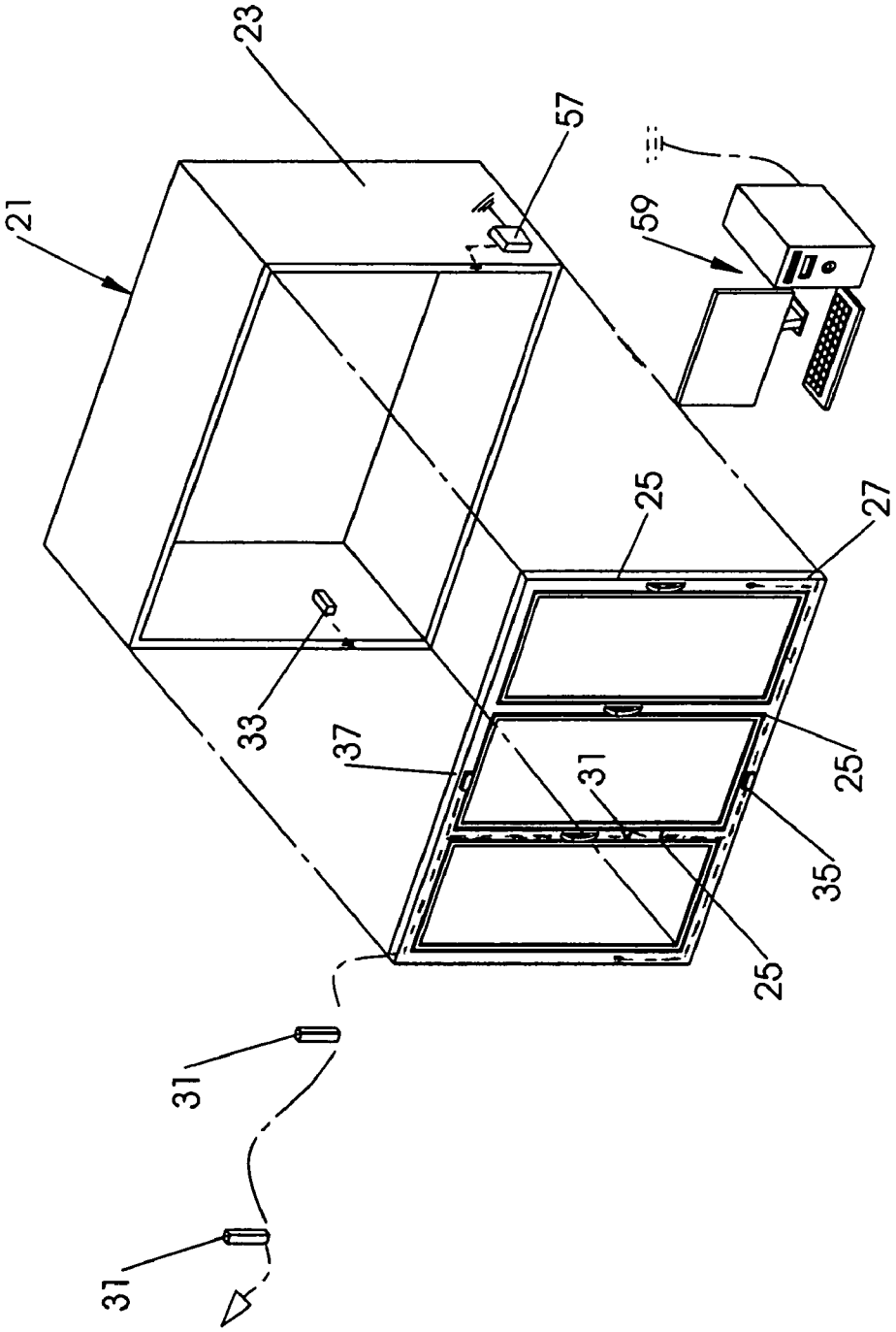

FIGURE 1

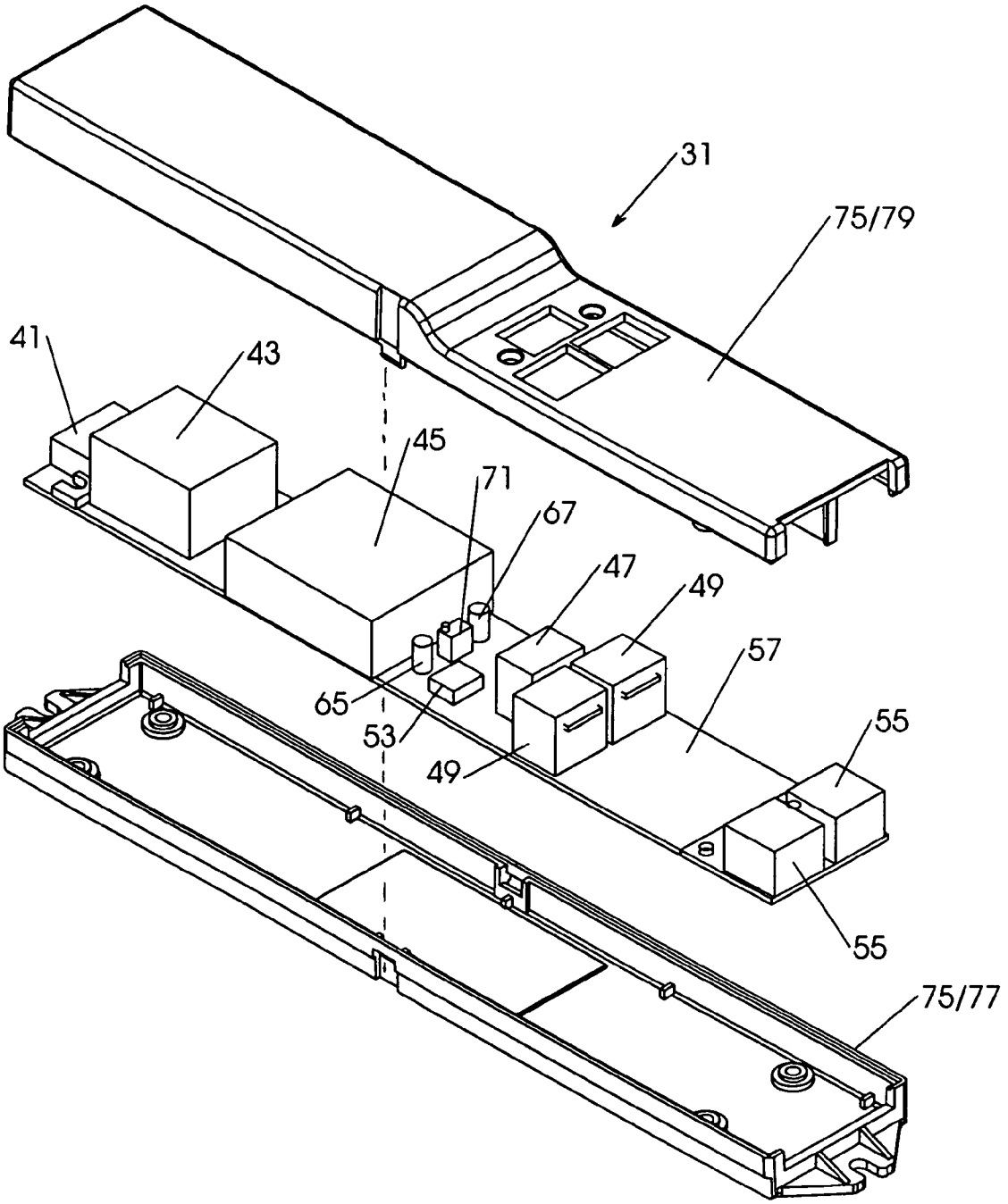

FIGURE 2

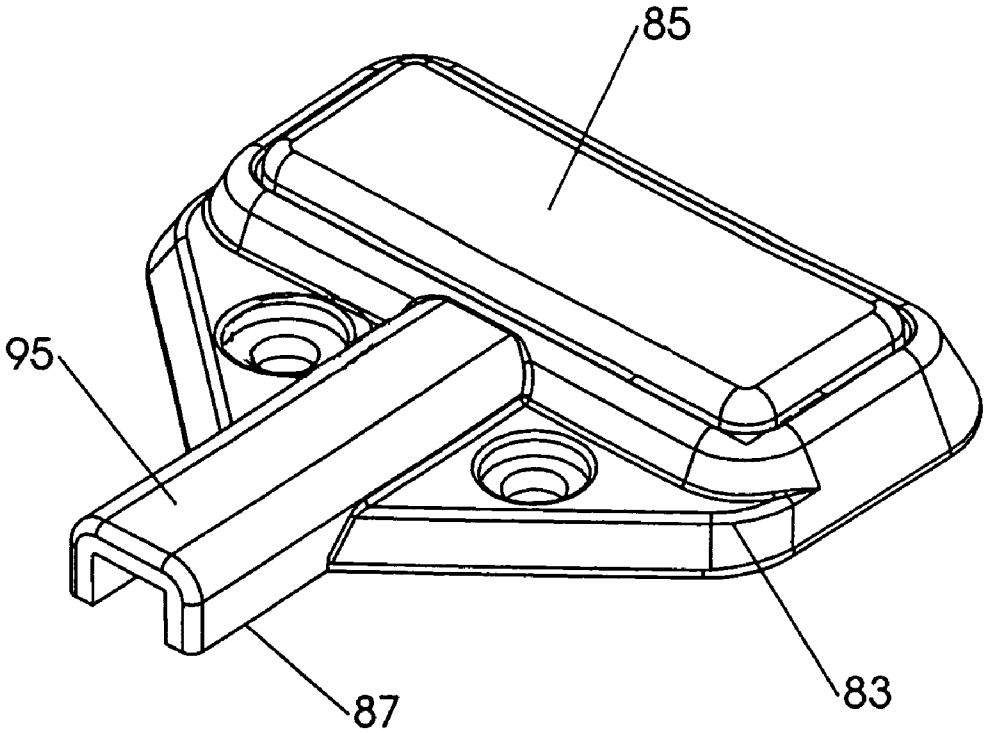

FIGURE 3

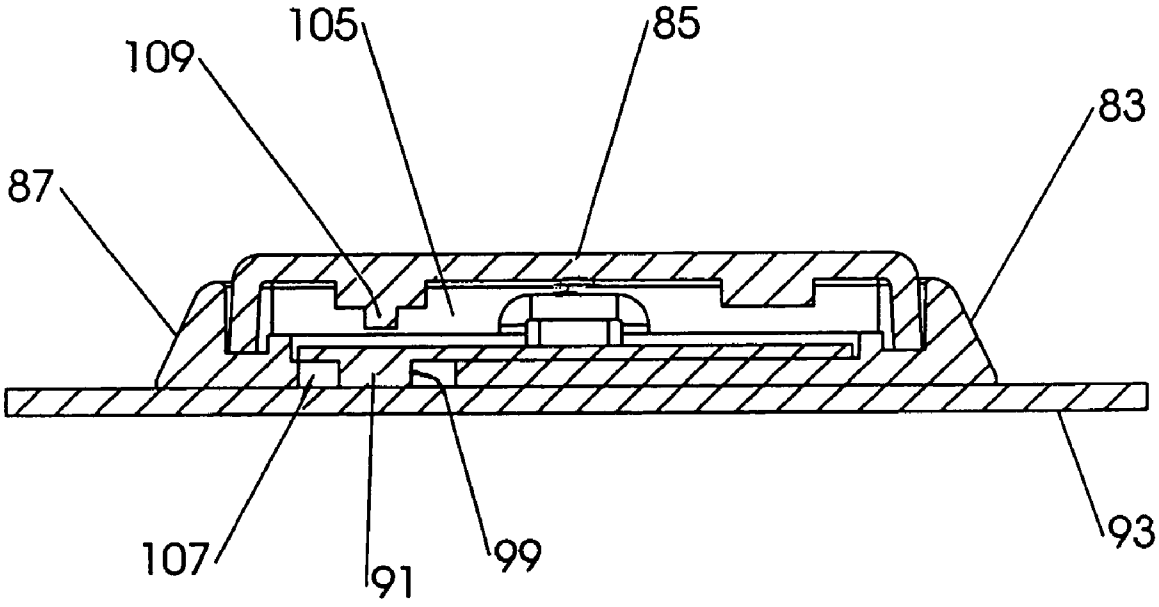

FIGURE 5

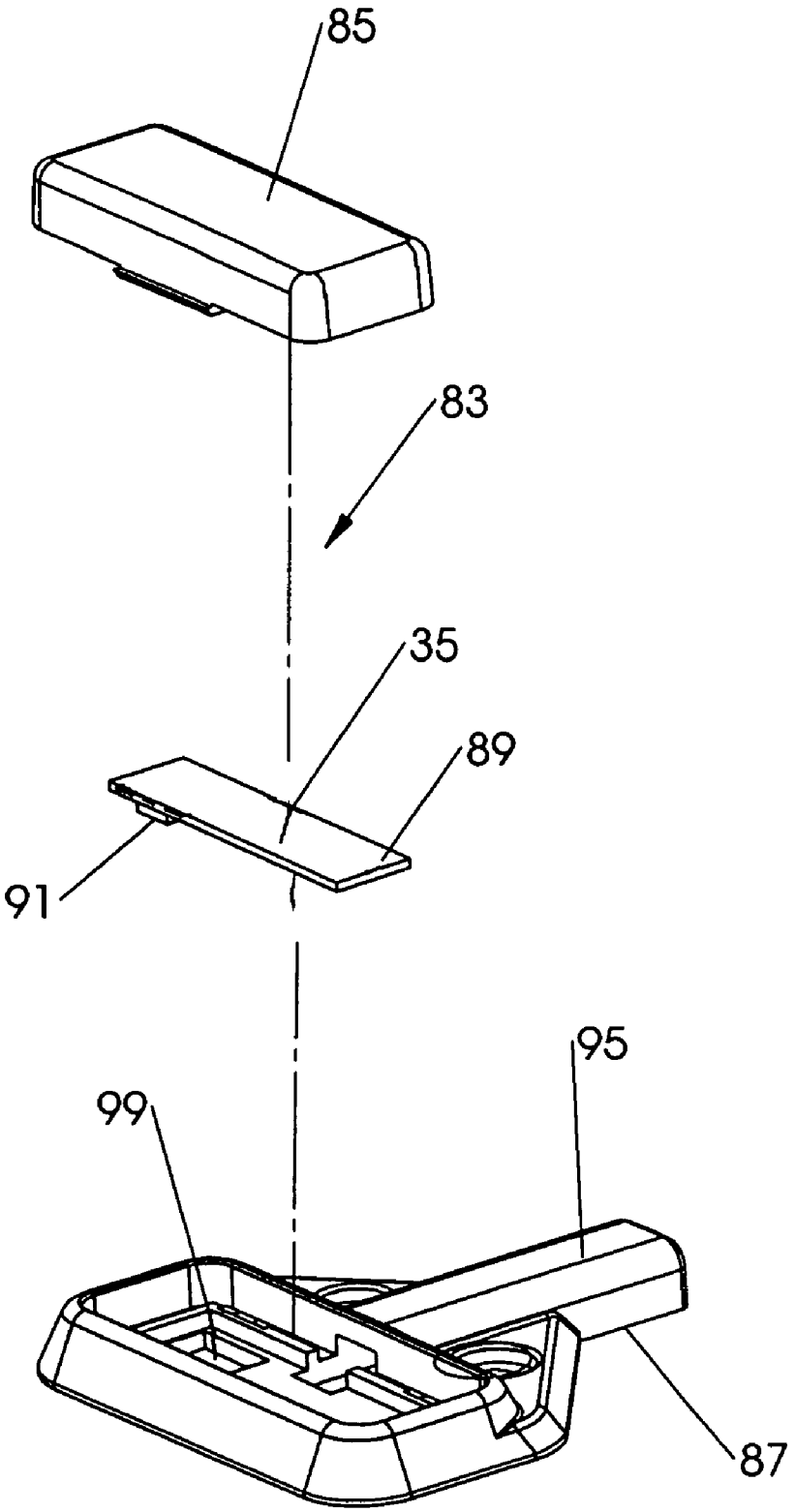

FIGURE 4

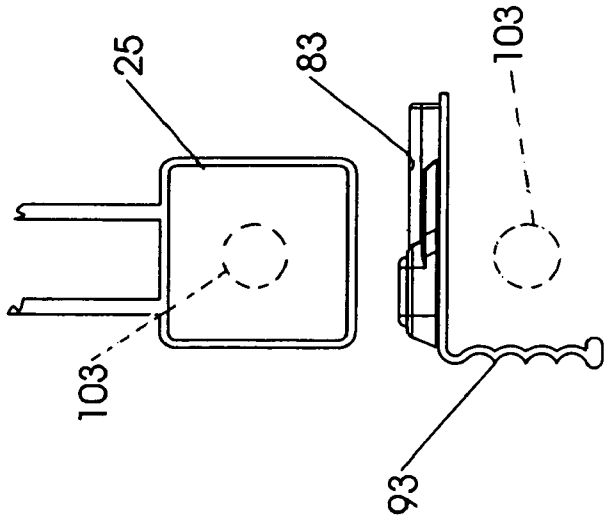

FIGURE 6

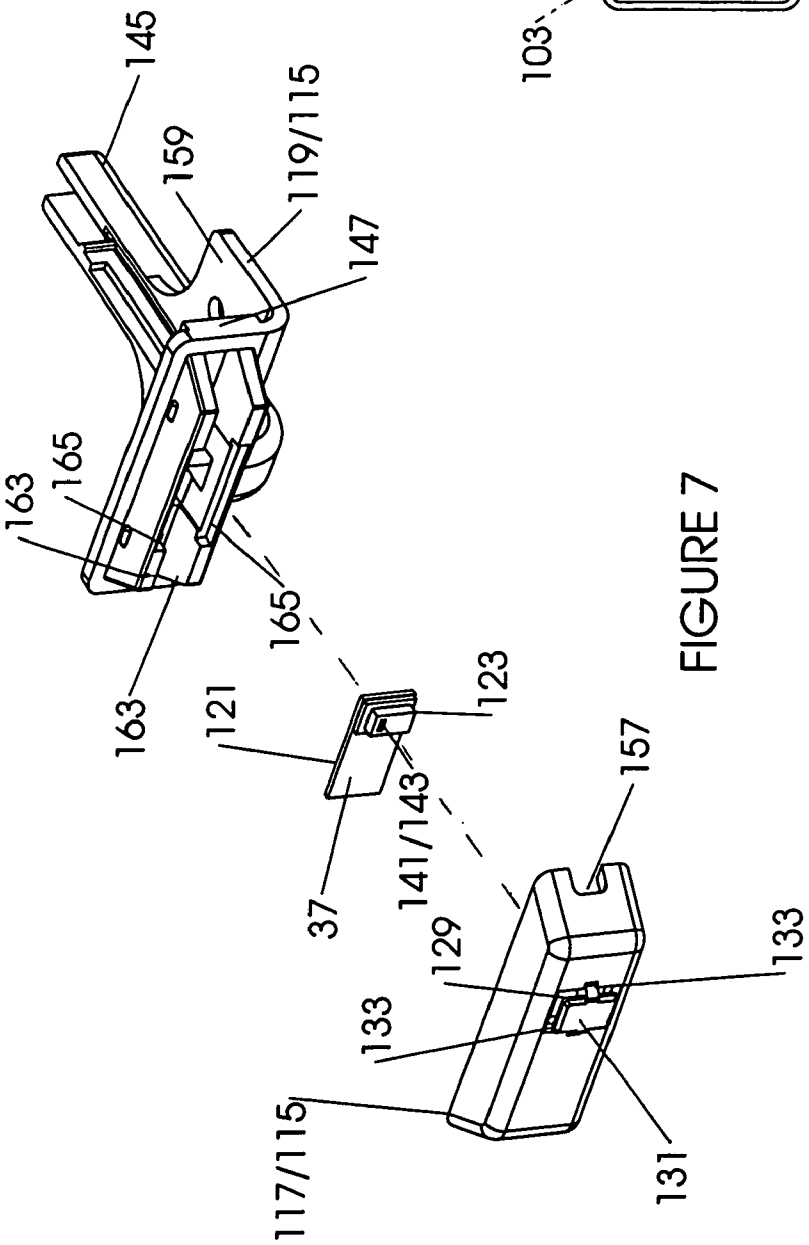

FIGURE 7

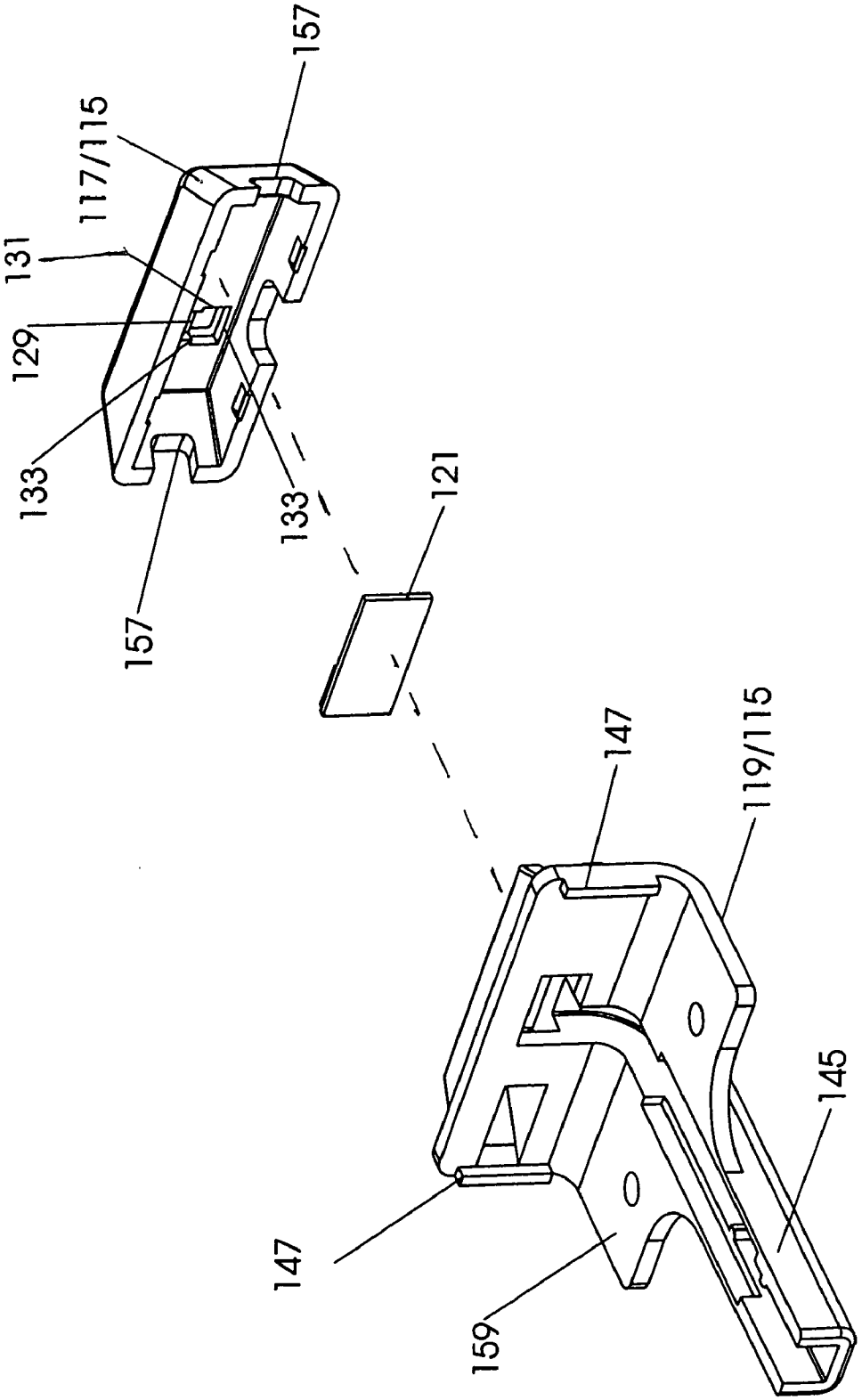

FIGURE 8

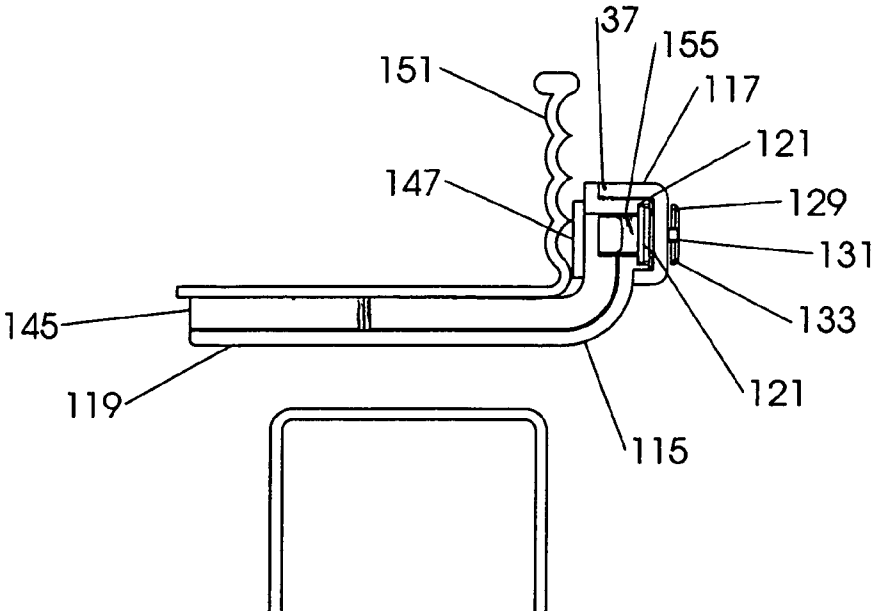

FIGURE 9

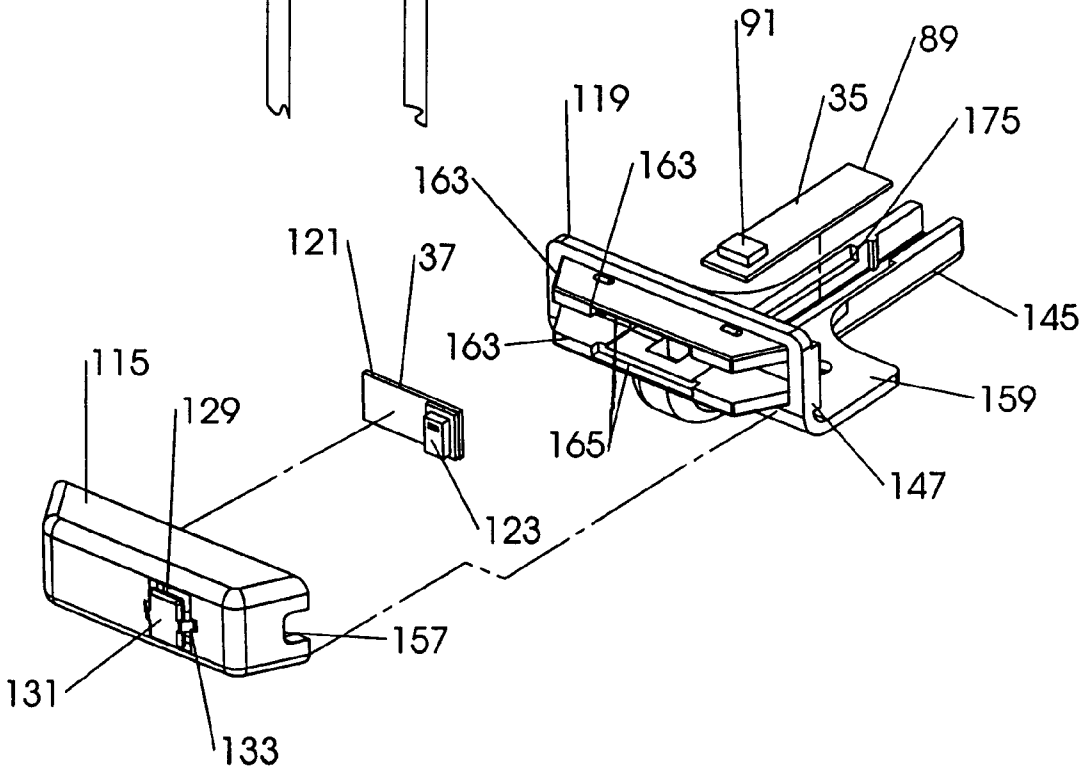

FIGURE 10

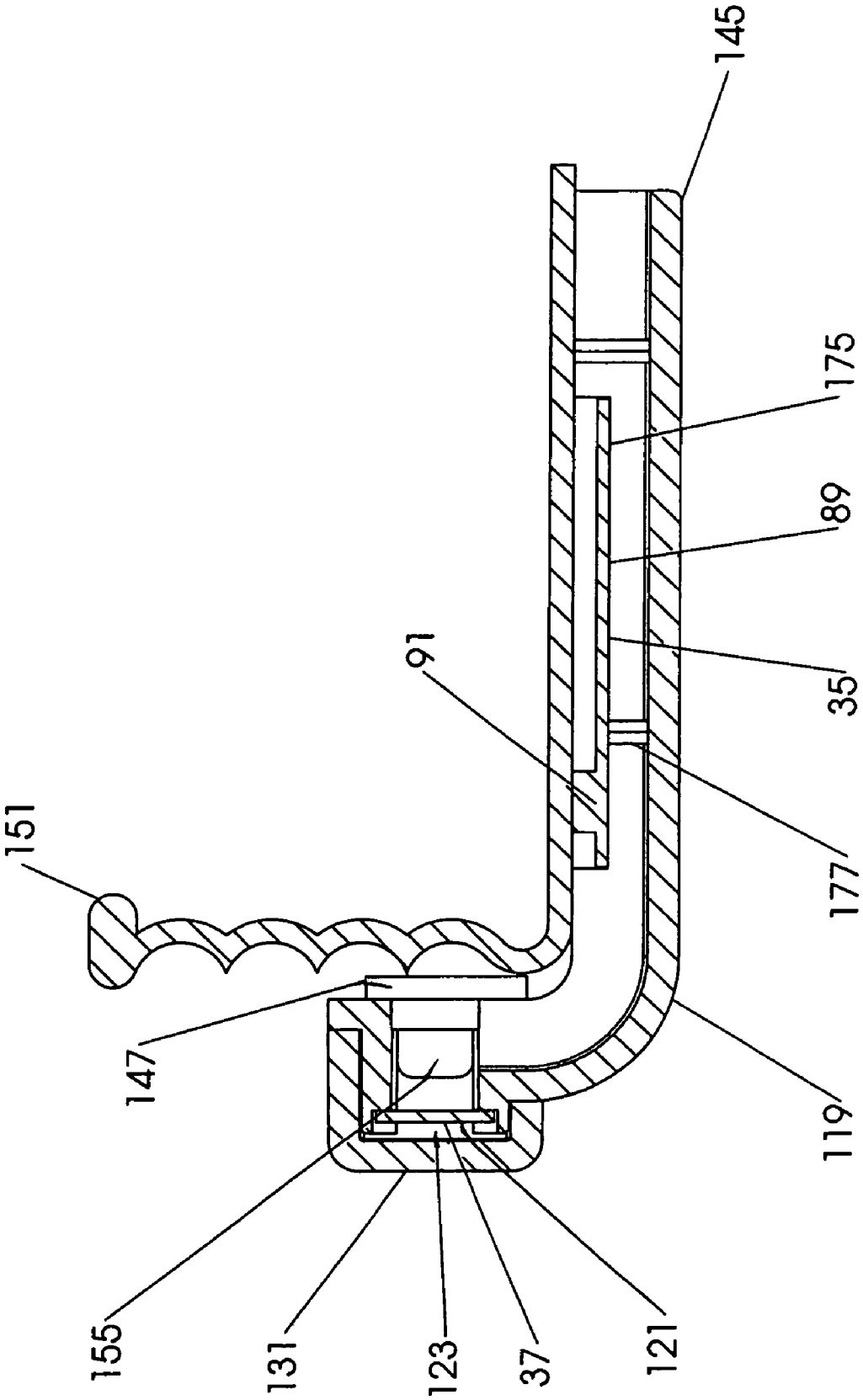

FIGURE 11

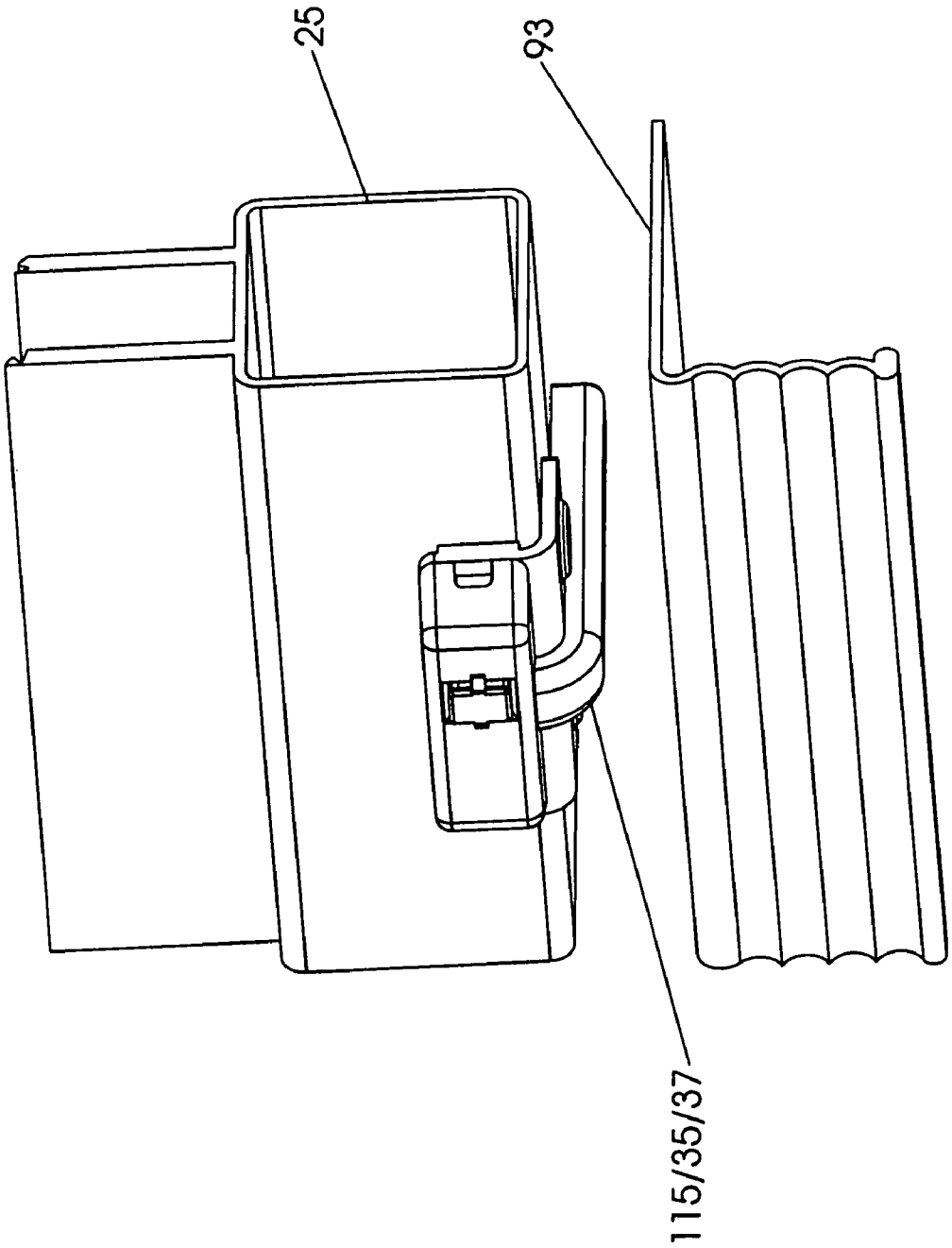

FIGURE 12

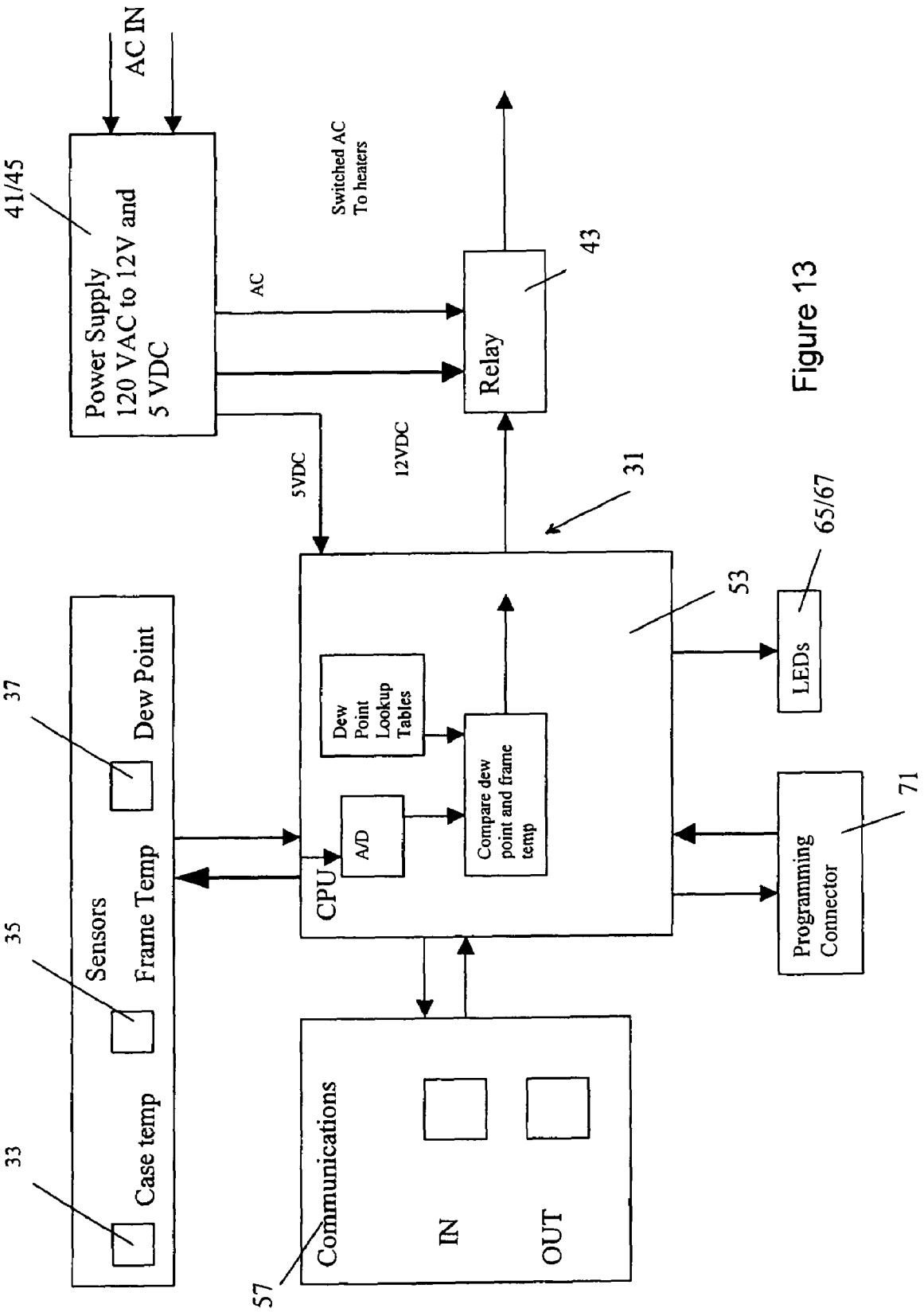
AC IN
41/45
Power Supply
120 VAC to 12V and
5 VDC
AC
Switched AC
To heaters
43
Relay
5VDC
12VDC
31
37
Dew Point
35
Sensors
Frame Temp
33
Case temp
CPU
A/D
Dew
Point
Lookup
Tables
Compare dew
point and frame
temp
53
LEDs
65/67
Programming
Connector
71
Communications
IN
OUT
57

Figure 13

Figure 14a

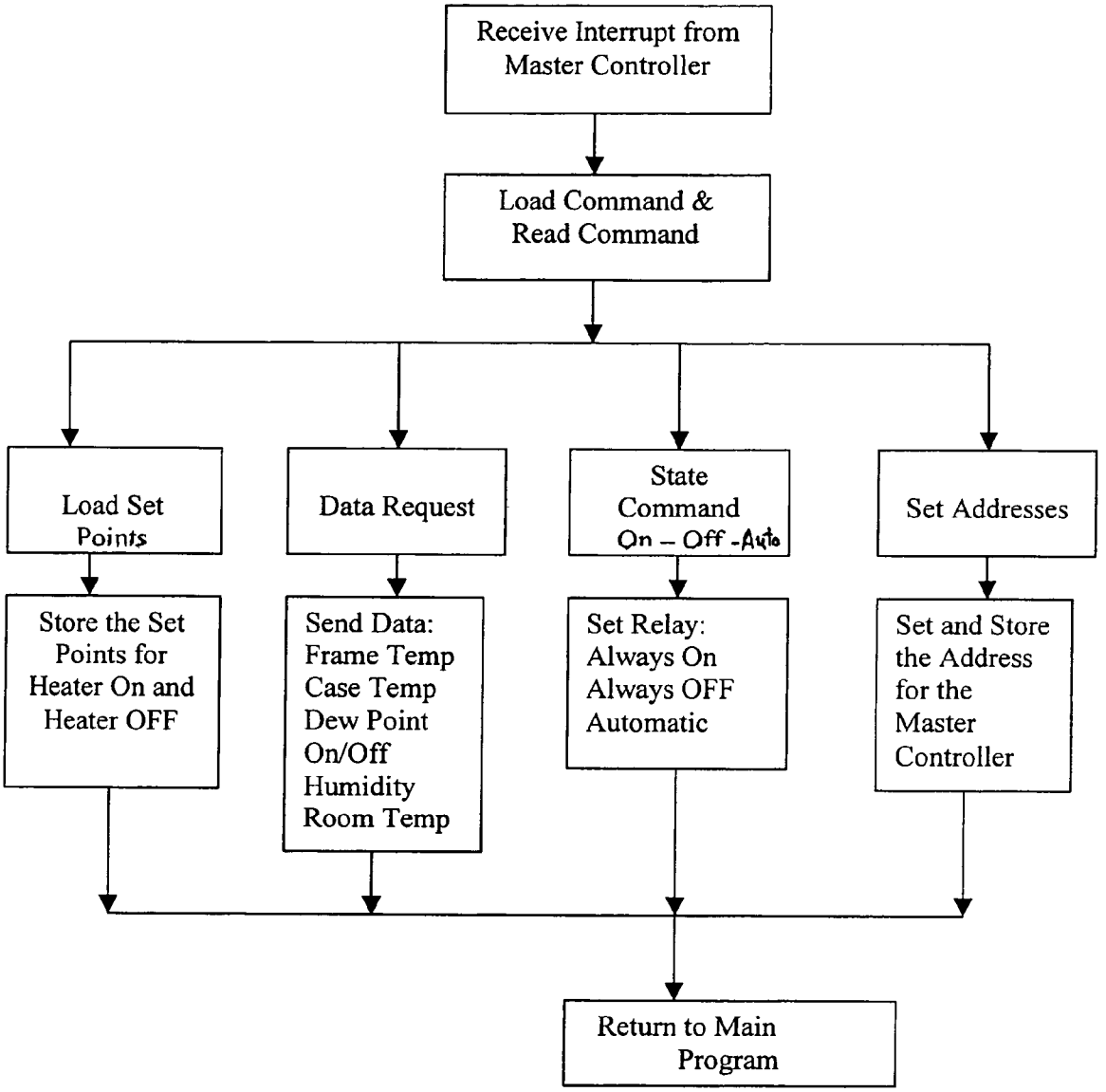
Receive Interrupt from Master Controller
Load Command & Read Command
Load Set Points
Data Request
State Command On – Off - Auto
Set Addresses
Store the Set Points for Heater On and Heater OFF
Send Data: Frame Temp Case Temp Dew Point On/Off Humidity Room Temp
Set Relay: Always On Always OFF Automatic
Set and Store the Address for the Master Controller
Return to Main Program

Figure 14b

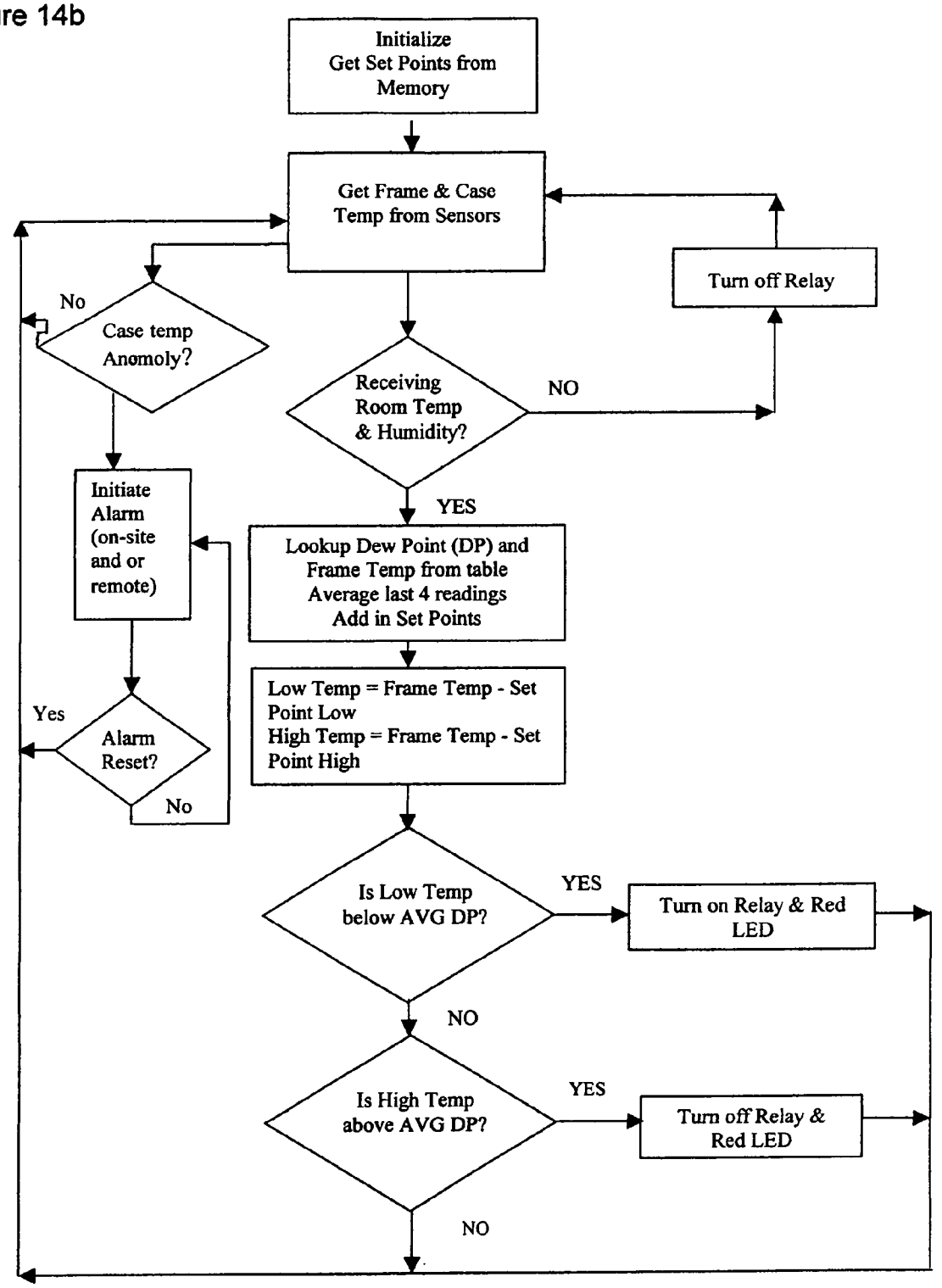
Initialize
Get Set Points from Memory
Get Frame & Case Temp from Sensors
Turn off Relay
No
Case temp Anomoly?
Receiving Room Temp & Humidity?
NO
YES
Initiate Alarm (on-site and or remote)
Lookup Dew Point (DP) and Frame Temp from table
Average last 4 readings
Add in Set Points
Low Temp = Frame Temp - Set Point Low
High Temp = Frame Temp - Set Point High
Yes
Alarm Reset?
No
Is Low Temp below AVG DP?
YES
Turn on Relay & Red LED
NO
Is High Temp above AVG DP?
YES
Turn off Relay & Red LED
NO

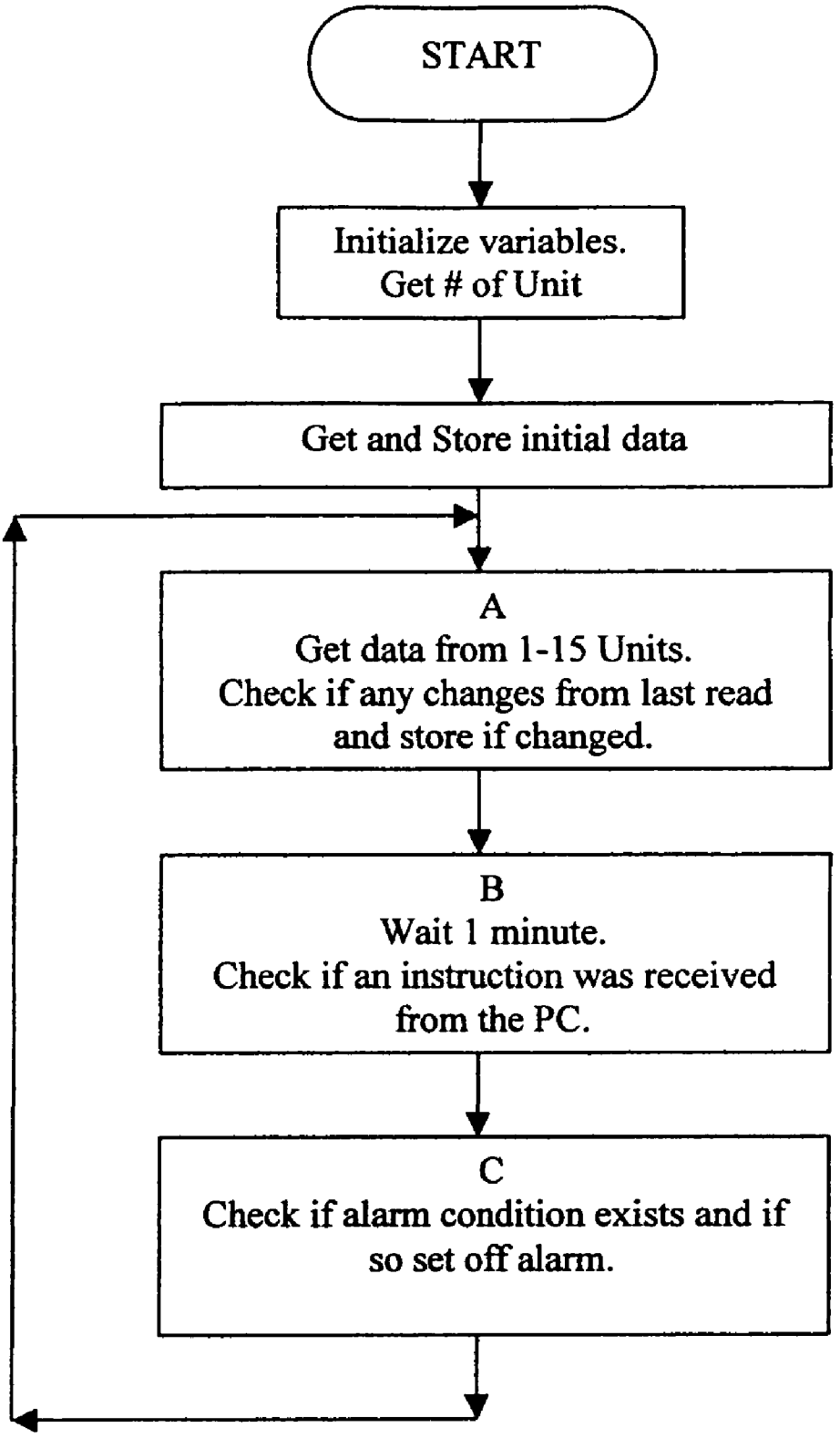
START
Initialize variables.
Get # of Unit
Get and Store initial data
A
Get data from 1-15 Units.
Check if any changes from last read
and store if changed.
B
Wait 1 minute.
Check if an instruction was received
from the PC.
C
Check if alarm condition exists and if
so set off alarm.

Figure 14c

Figure 14d

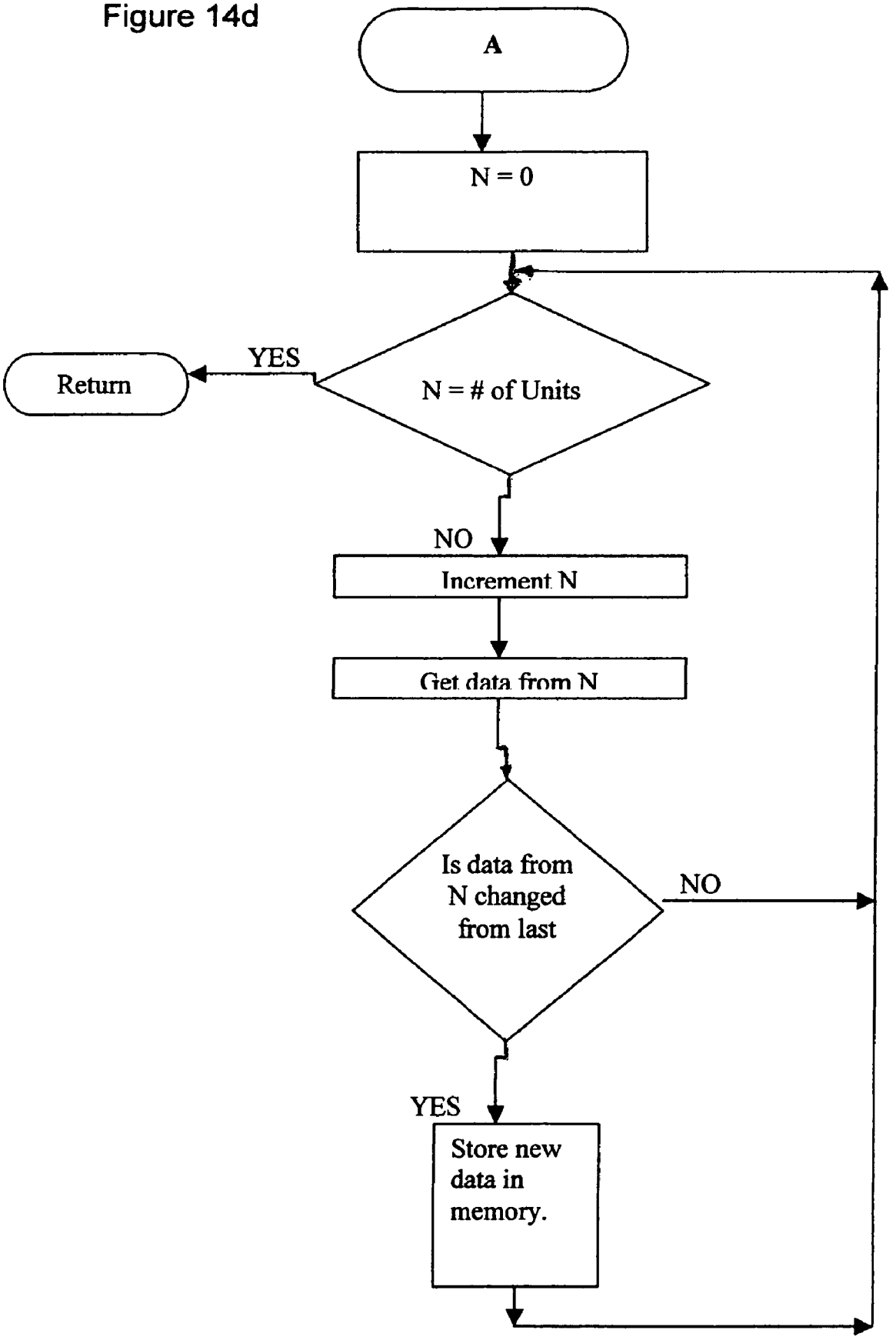
A
N = 0
N = # of Units
YES
Return
NO
Increment N
Get data from N
Is data from N changed from last
NO
YES
Store new data in memory.

Figure 14e

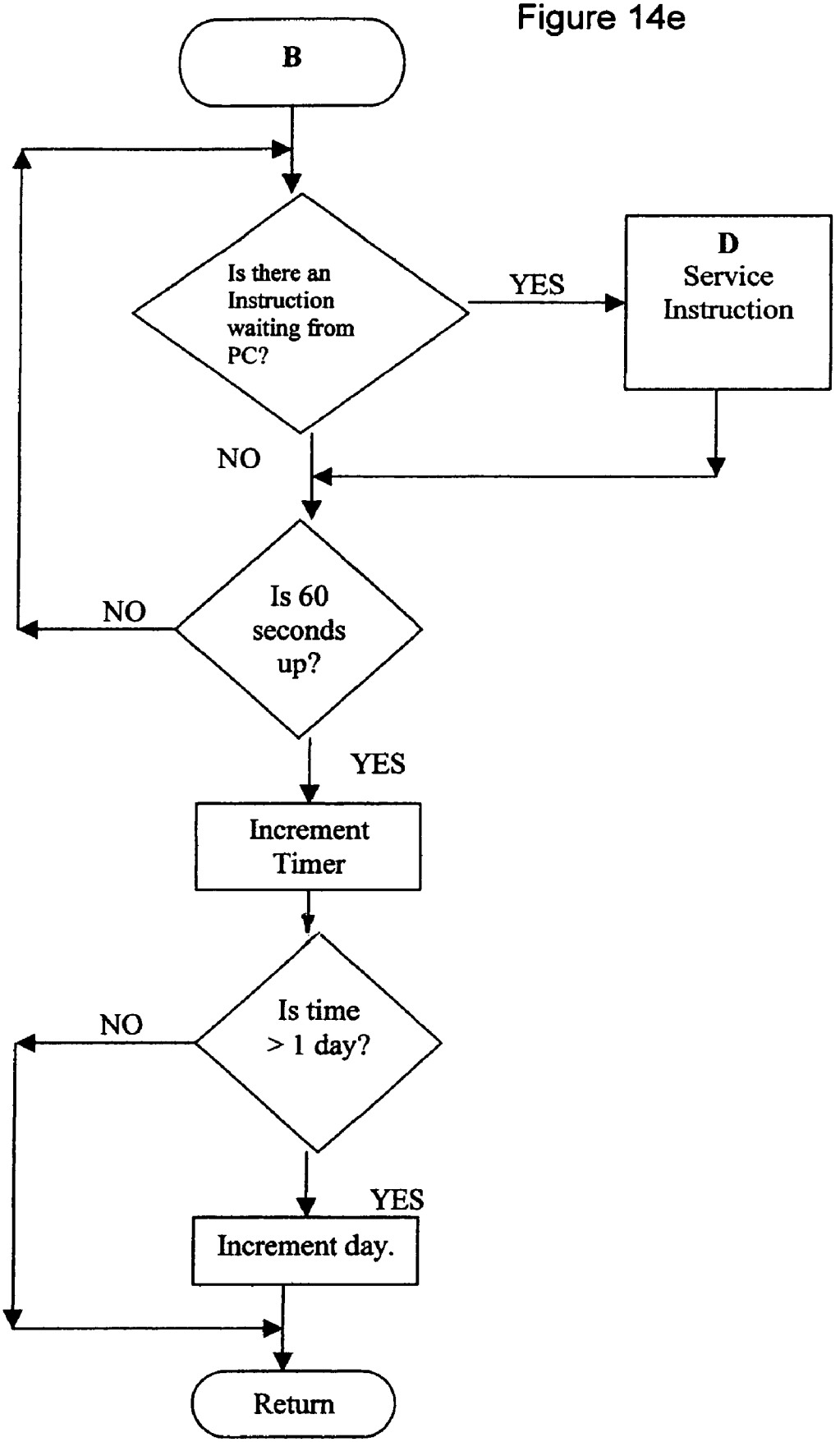
B
Is there an Instruction waiting from PC?
YES
D
Service Instruction
NO
Is 60 seconds up?
NO
YES
Increment Timer
Is time > 1 day?
NO
YES
Increment day.
Return

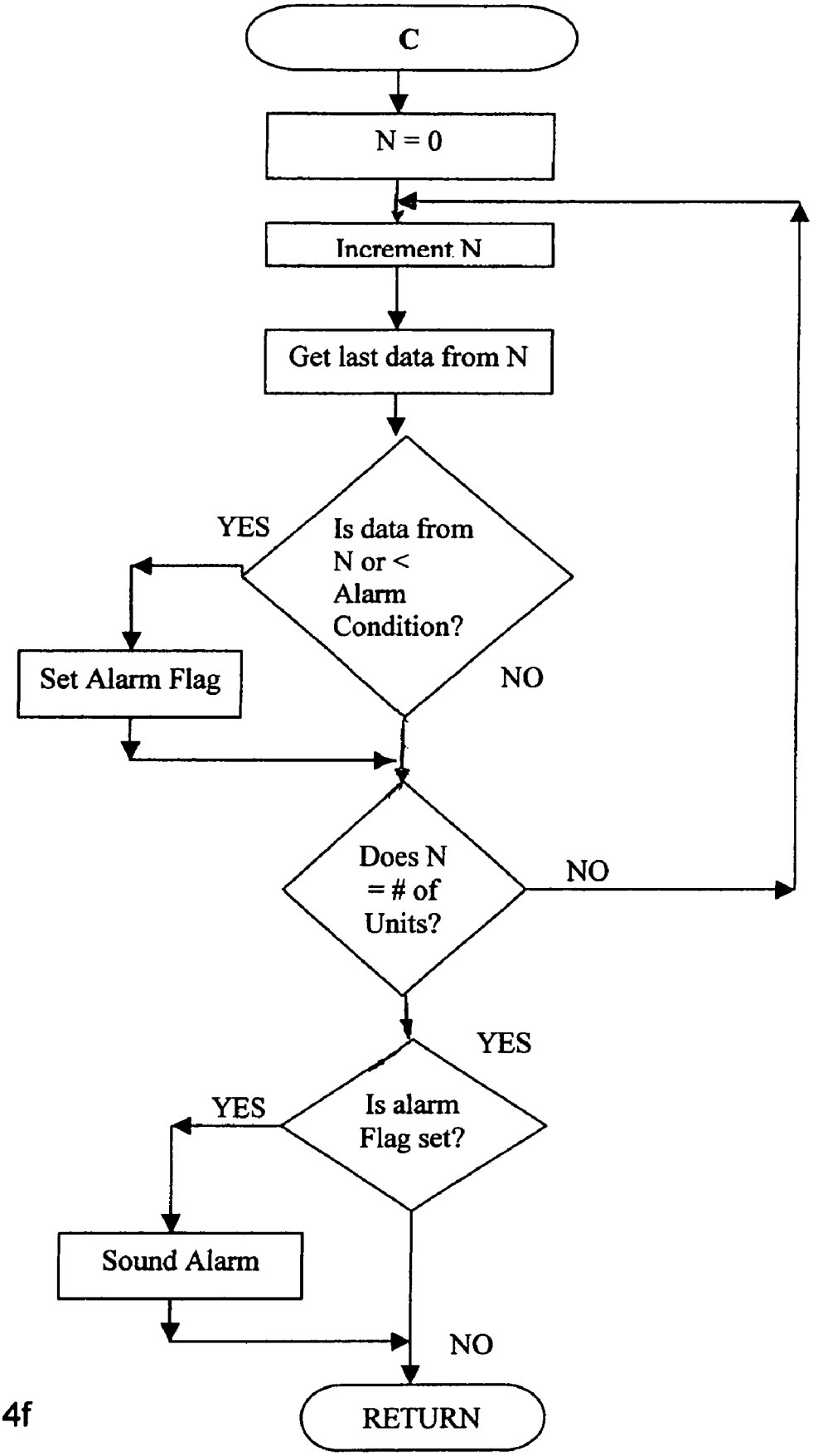
C
N = 0
Increment N
Get last data from N
Is data from N or < Alarm Condition?
YES
NO
Set Alarm Flag
Does N = # of Units?
NO
YES
Is alarm Flag set?
YES
Sound Alarm
NO
RETURN

Figure 14f

Figure 14g

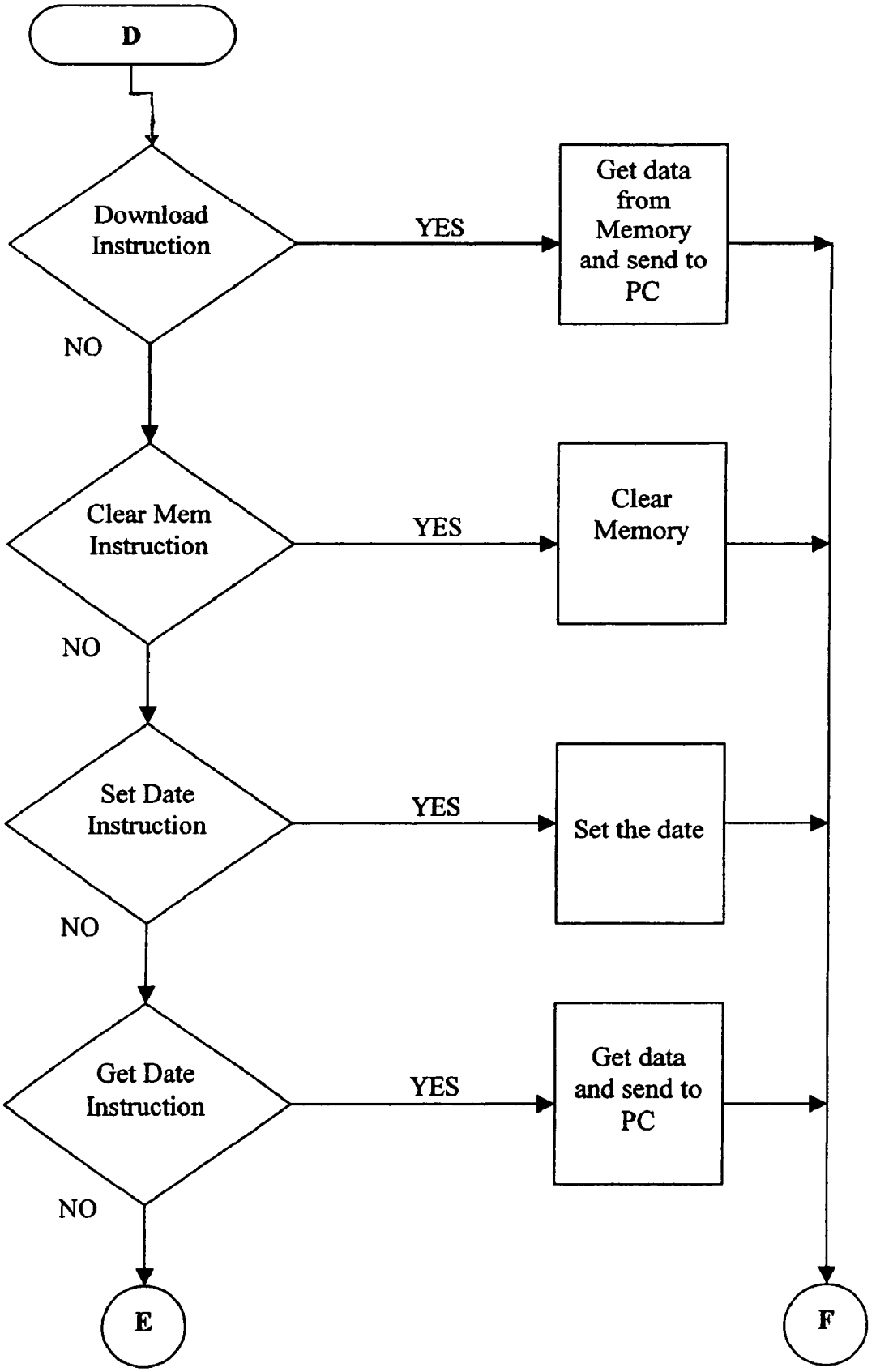
D
Download Instruction
YES
Get data from Memory and send to PC
NO
Clear Mem Instruction
YES
Clear Memory
NO
Set Date Instruction
YES
Set the date
NO
Get Date Instruction
YES
Get data and send to PC
NO
E
F

FIGURE 14h

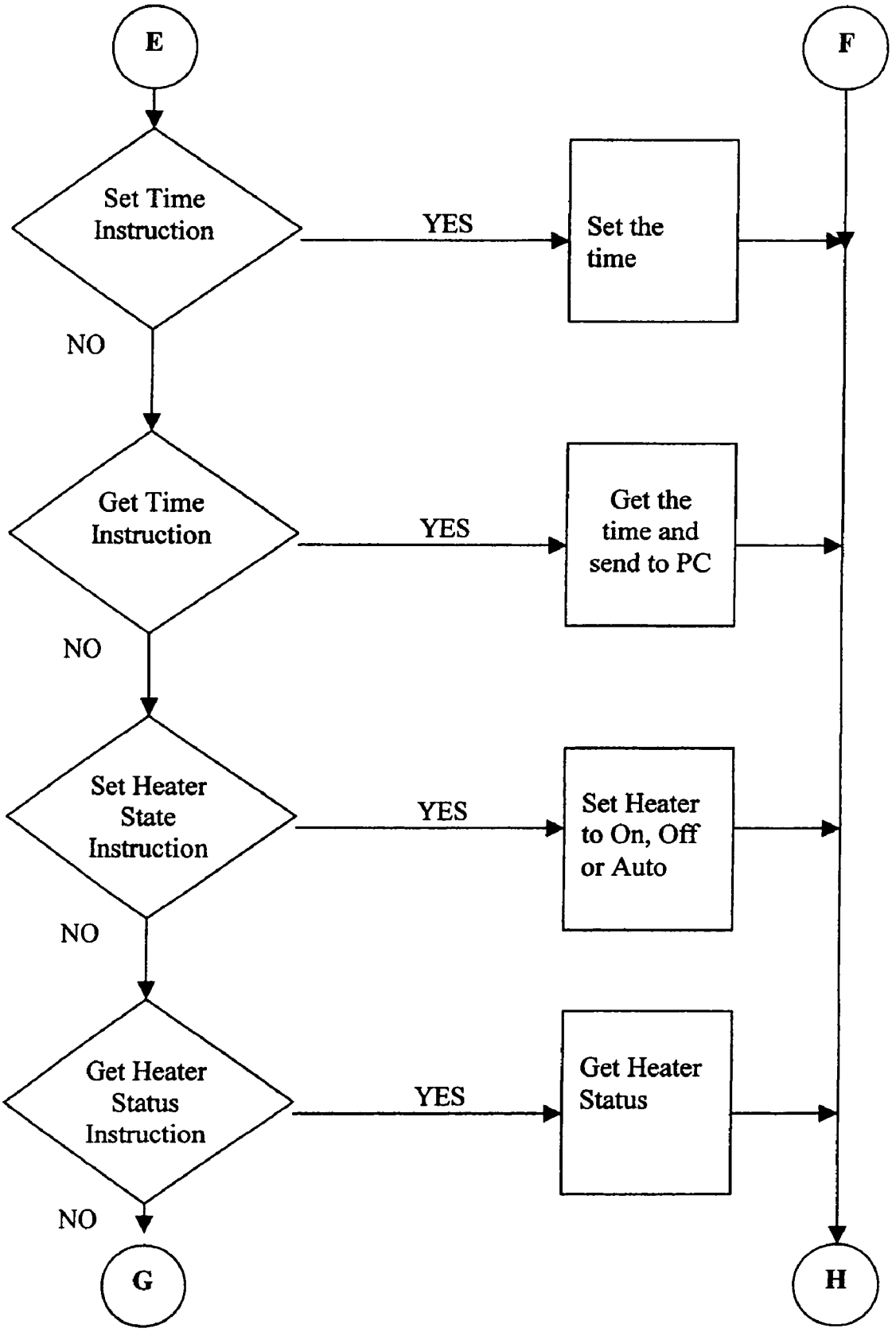
E
F
Set Time Instruction
YES
Set the time
NO
Get Time Instruction
YES
Get the time and send to PC
NO
Set Heater State Instruction
YES
Set Heater to On, Off or Auto
NO
Get Heater Status Instruction
YES
Get Heater Status
NO
G
H

FIGURE 14i

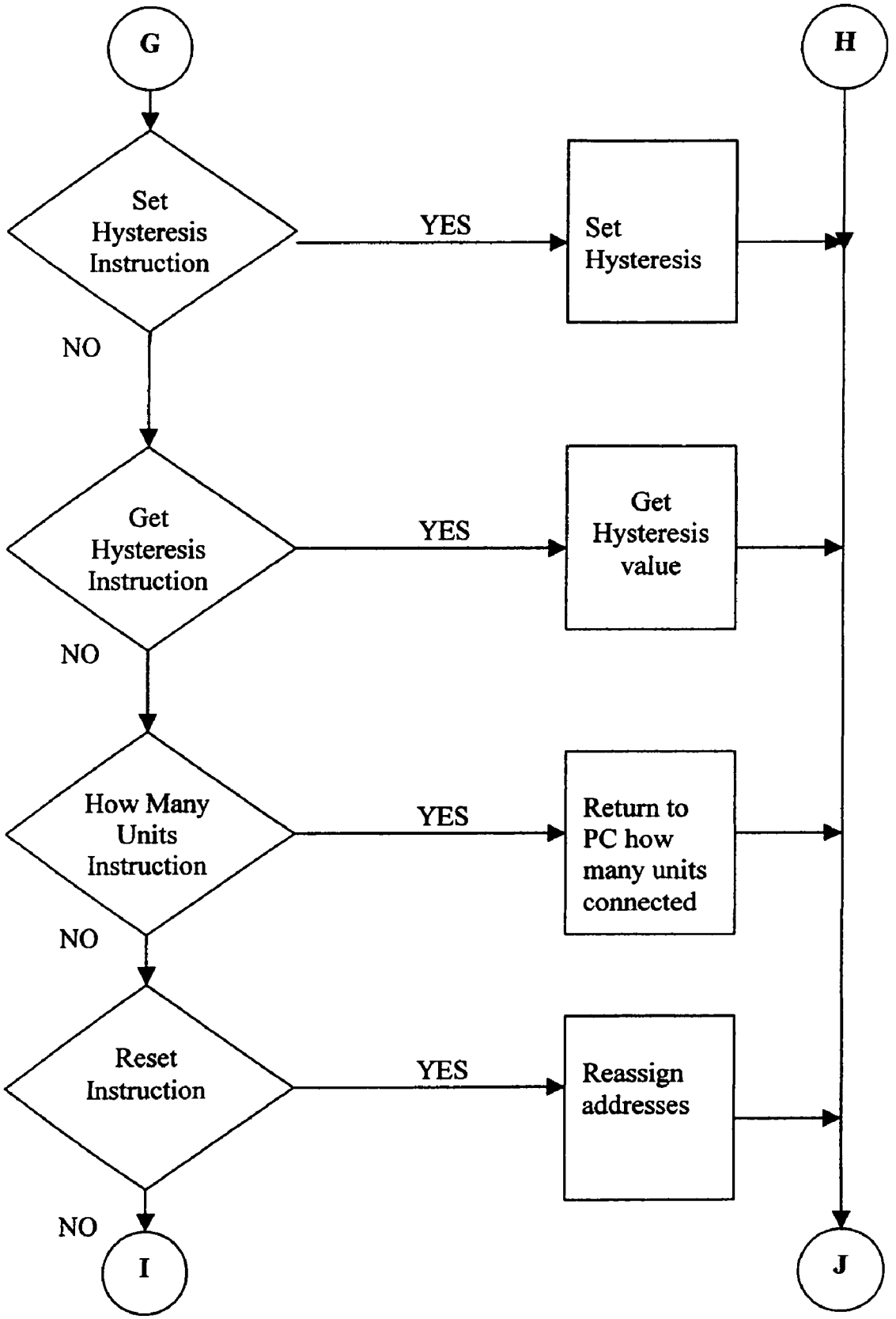
G
H
Set Hysteresis Instruction
YES
Set Hysteresis
NO
Get Hysteresis Instruction
YES
Get Hysteresis value
NO
How Many Units Instruction
YES
Return to PC how many units connected
NO
Reset Instruction
YES
Reassign addresses
NO
I
J

FIGURE 14j

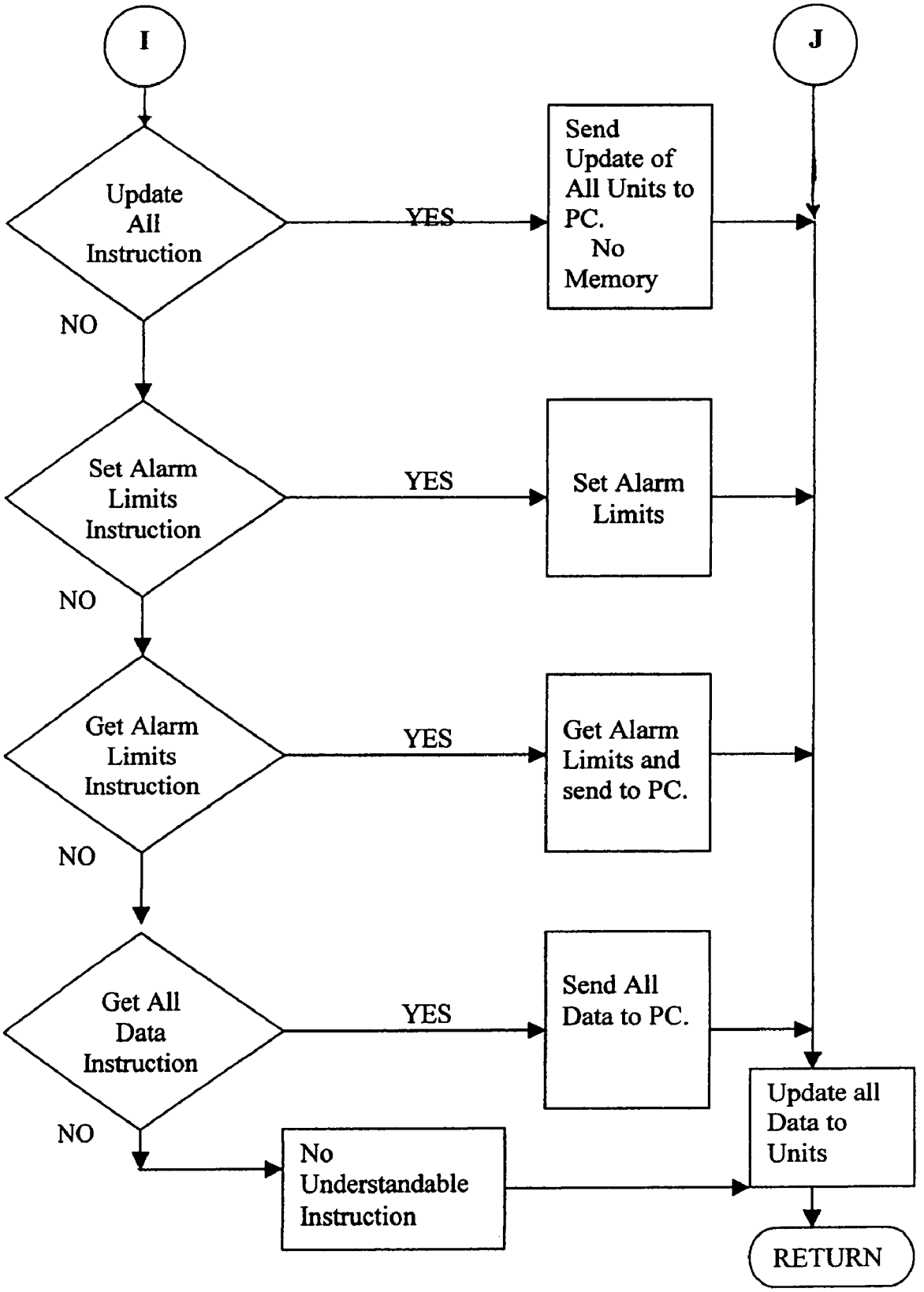
I
J
Update All Instruction
YES
Send Update of All Units to PC. No Memory
NO
Set Alarm Limits Instruction
YES
Set Alarm Limits
NO
Get Alarm Limits Instruction
YES
Get Alarm Limits and send to PC.
NO
Get All Data Instruction
YES
Send All Data to PC.
NO
No Understandable Instruction
Update all Data to Units
RETURN

Figure 15a

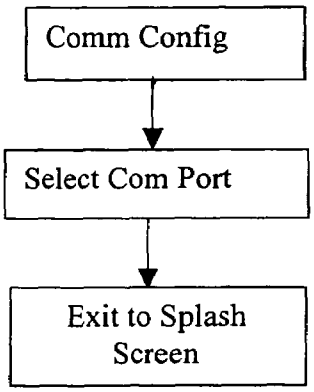

Figure 15c

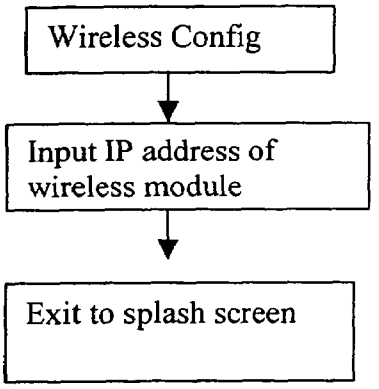

Figure 15b

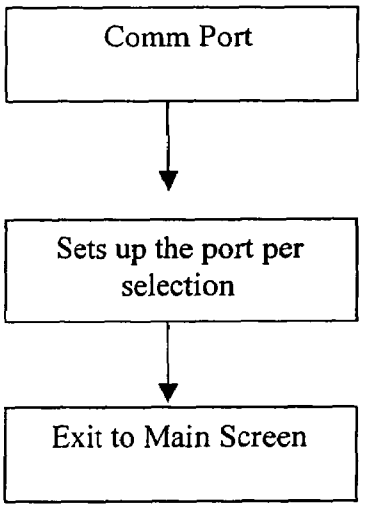

Figure 15d

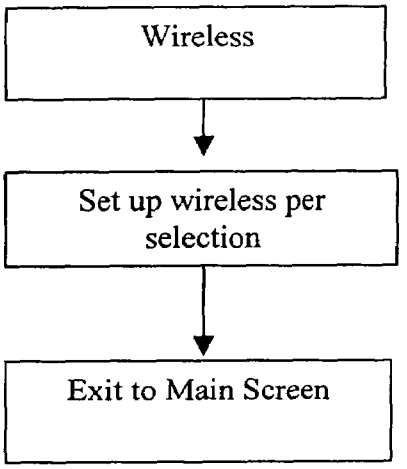

Figure 15e

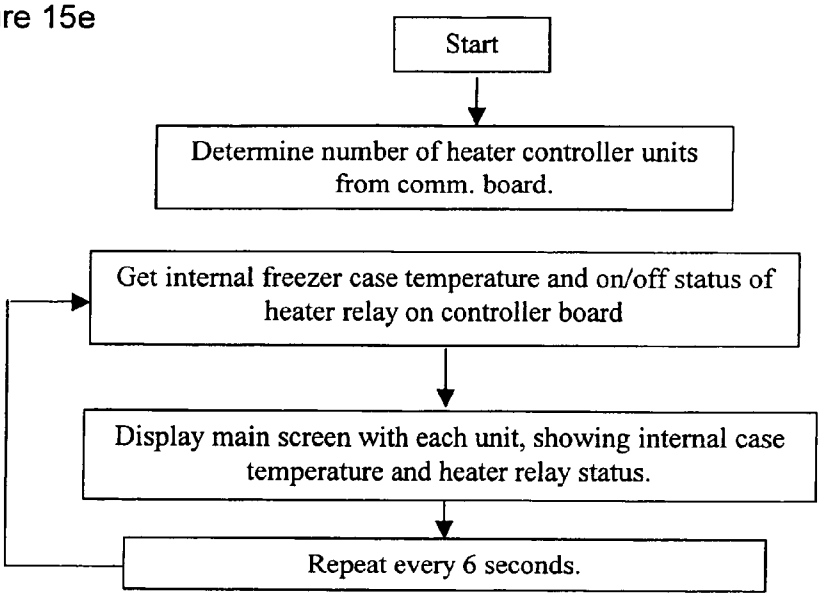

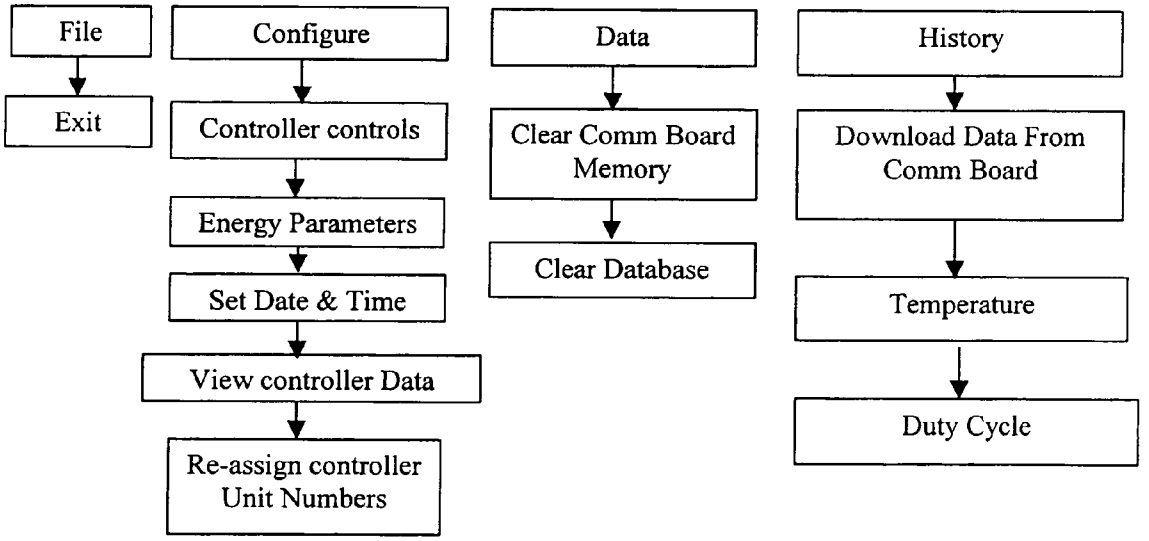

Figure 15f

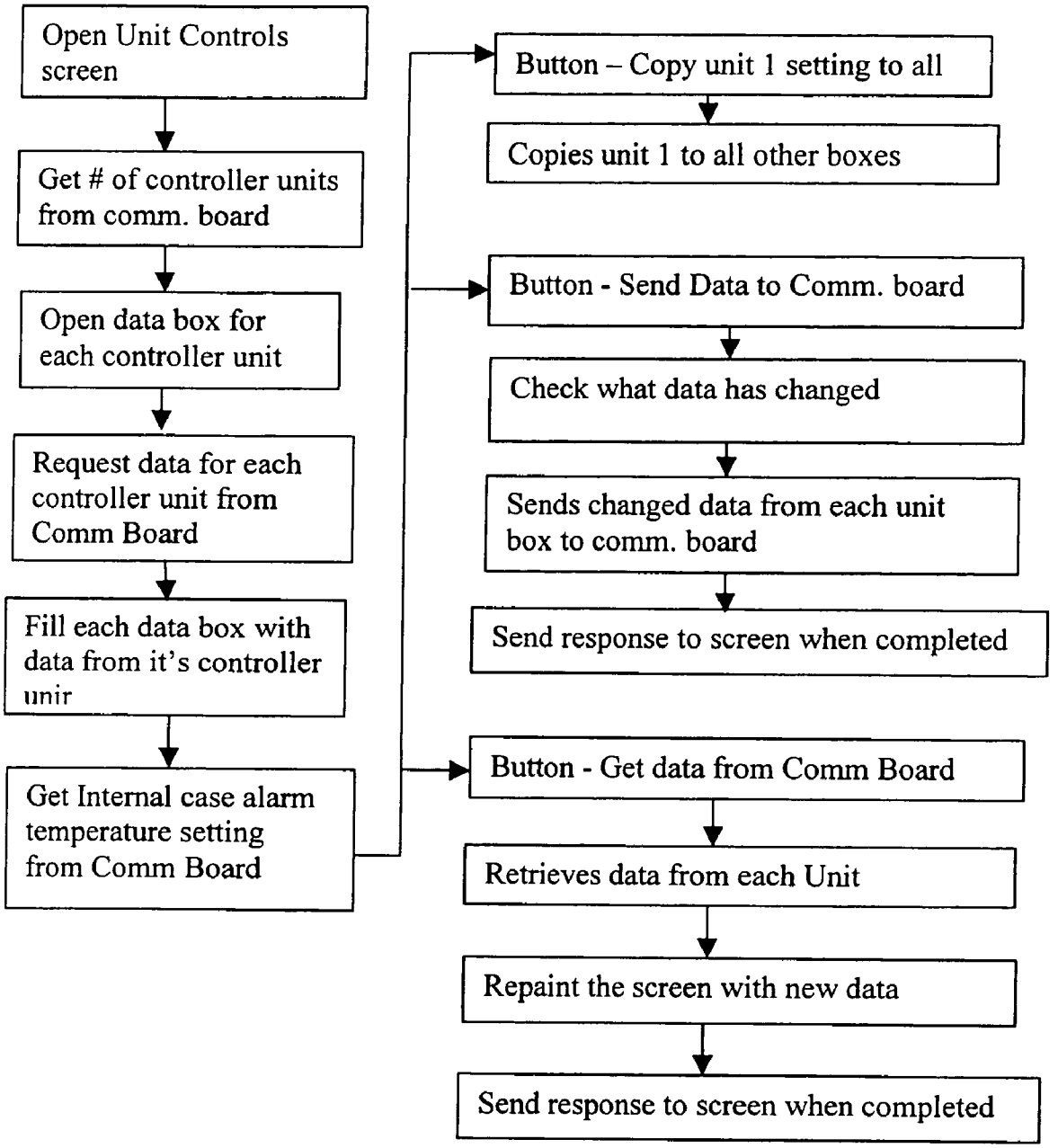
Open Unit Controls screen
Get # of controller units from comm. board
Open data box for each controller unit
Request data for each controller unit from Comm Board
Fill each data box with data from it's controller unir
Get Internal case alarm temperature setting from Comm Board
Button – Copy unit 1 setting to all
Copies unit 1 to all other boxes
Button - Send Data to Comm. board
Check what data has changed
Sends changed data from each unit box to comm. board
Send response to screen when completed
Button - Get data from Comm Board
Retrieves data from each Unit
Repaint the screen with new data
Send response to screen when completed

Figure 15g

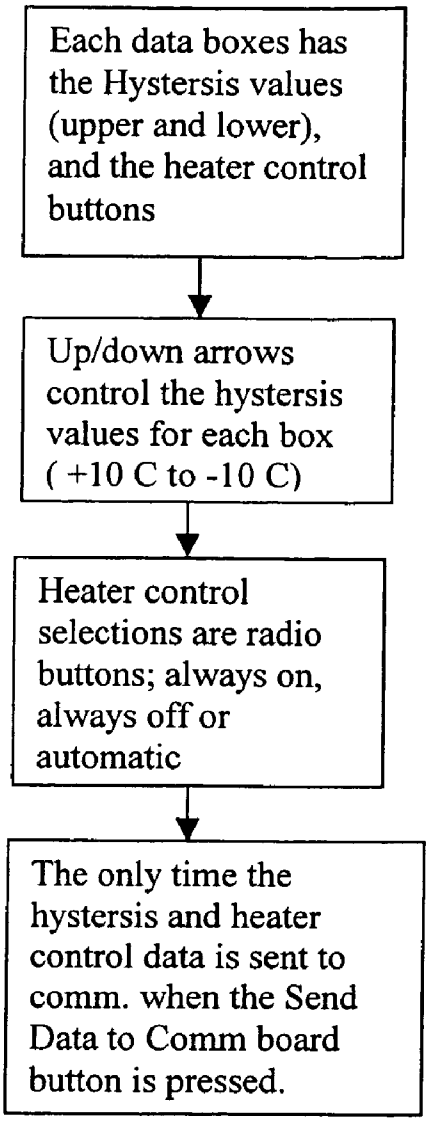

Figure 15h

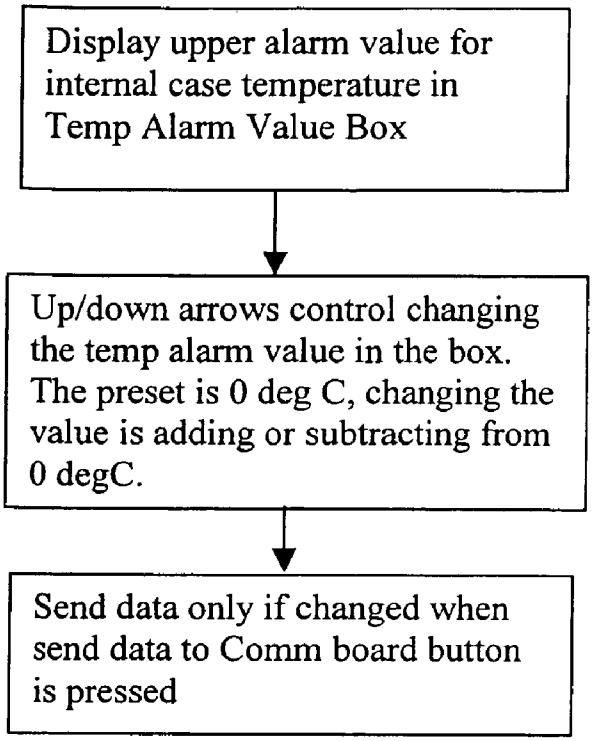

Figure 15i

Figure 15j

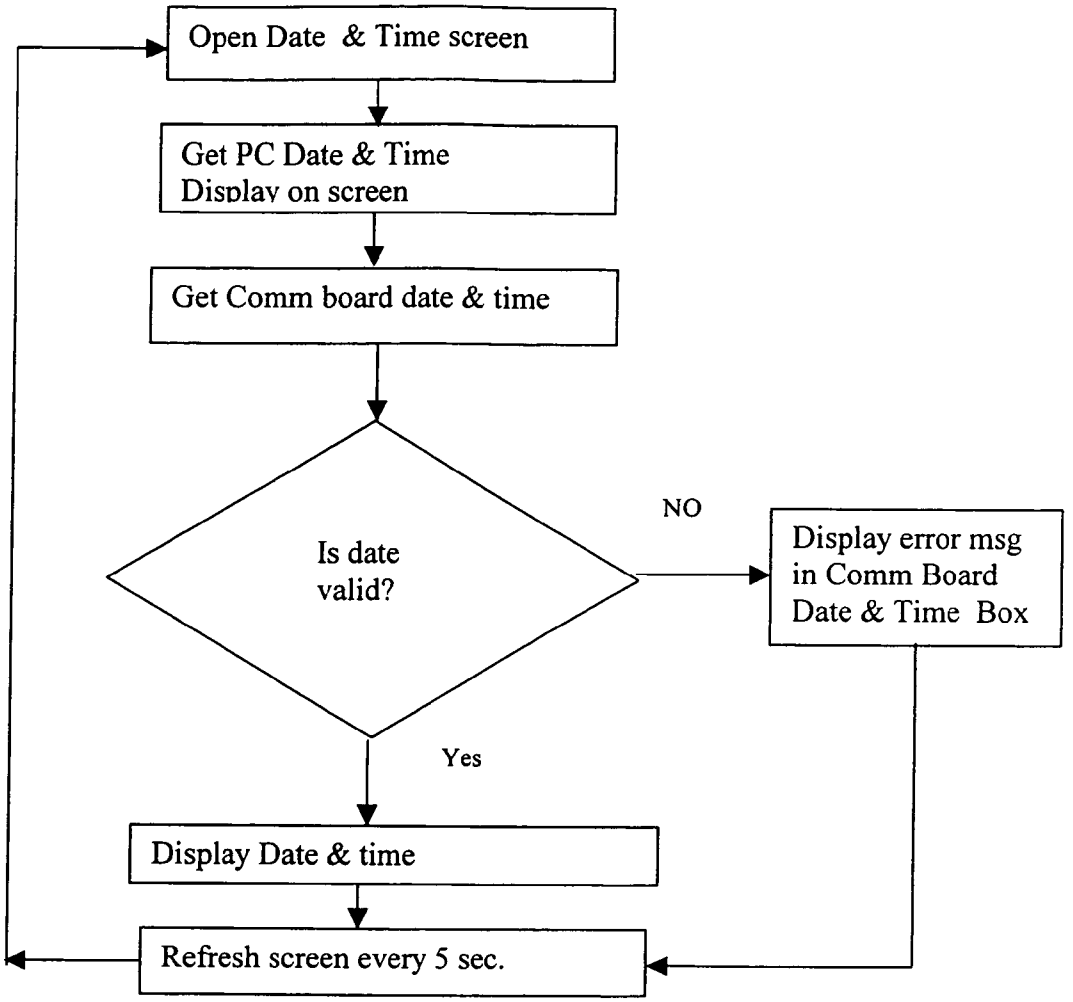
Open Date & Time screen
Get PC Date & Time
Display on screen
Get Comm board date & time
Is date
valid?
NO
Display error msg
in Comm Board
Date & Time Box
Yes
Display Date & time
Refresh screen every 5 sec.

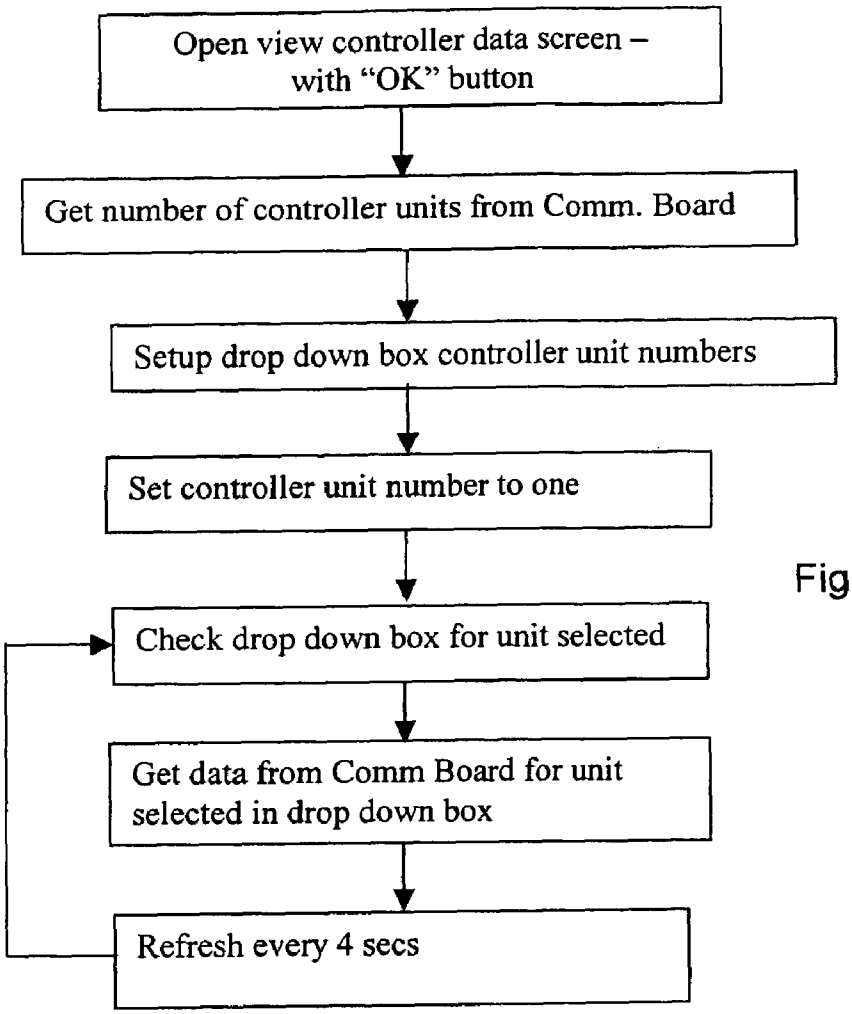

Figure 15k

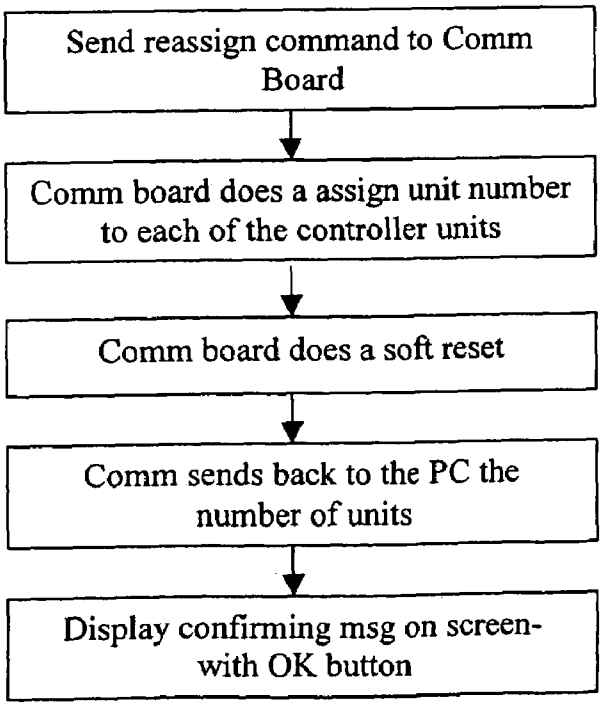

Figure 15l

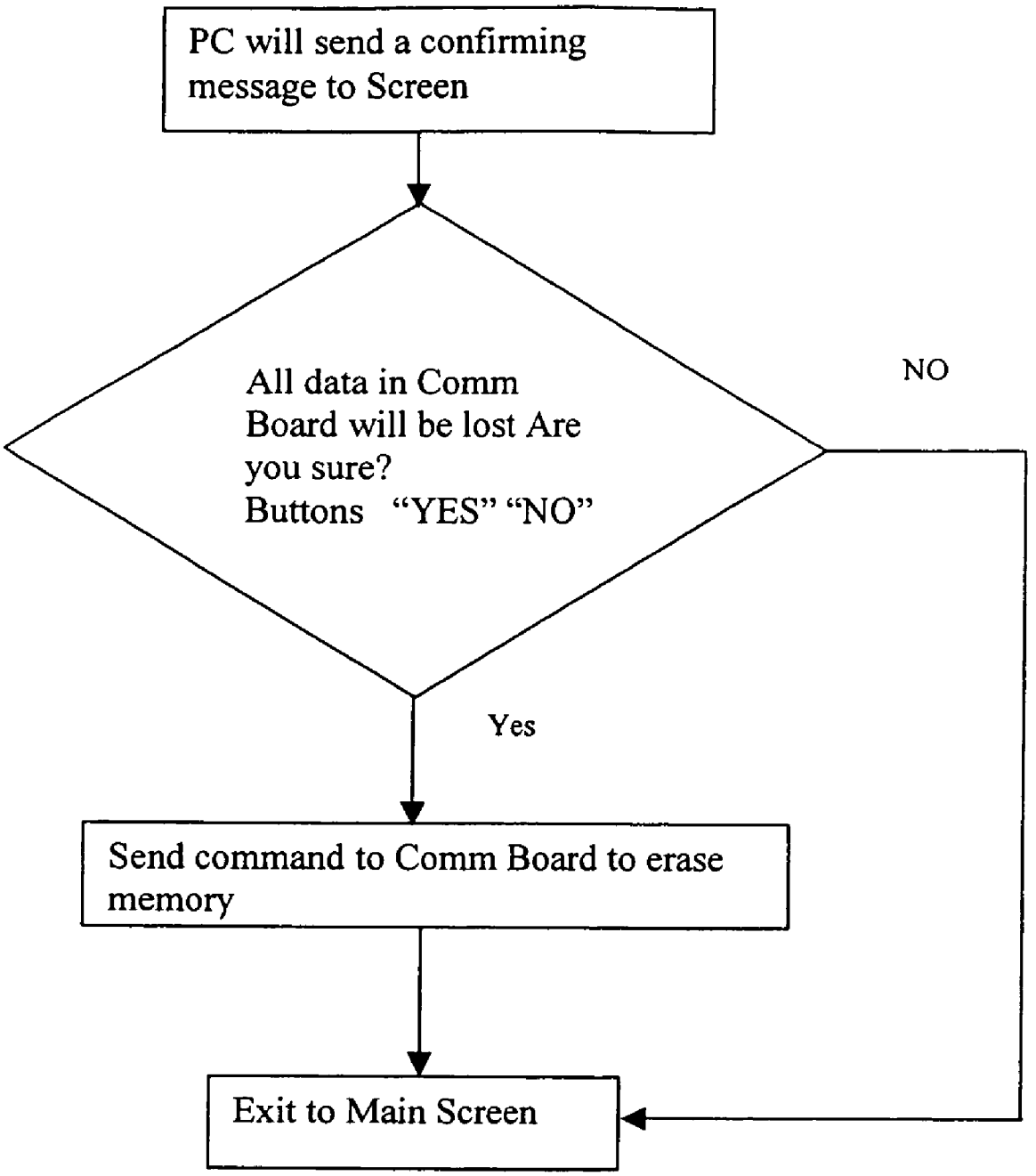
PC will send a confirming message to Screen
All data in Comm Board will be lost Are you sure?
Buttons "YES" "NO"
NO
Yes
Send command to Comm Board to erase memory
Exit to Main Screen

Figure 15m

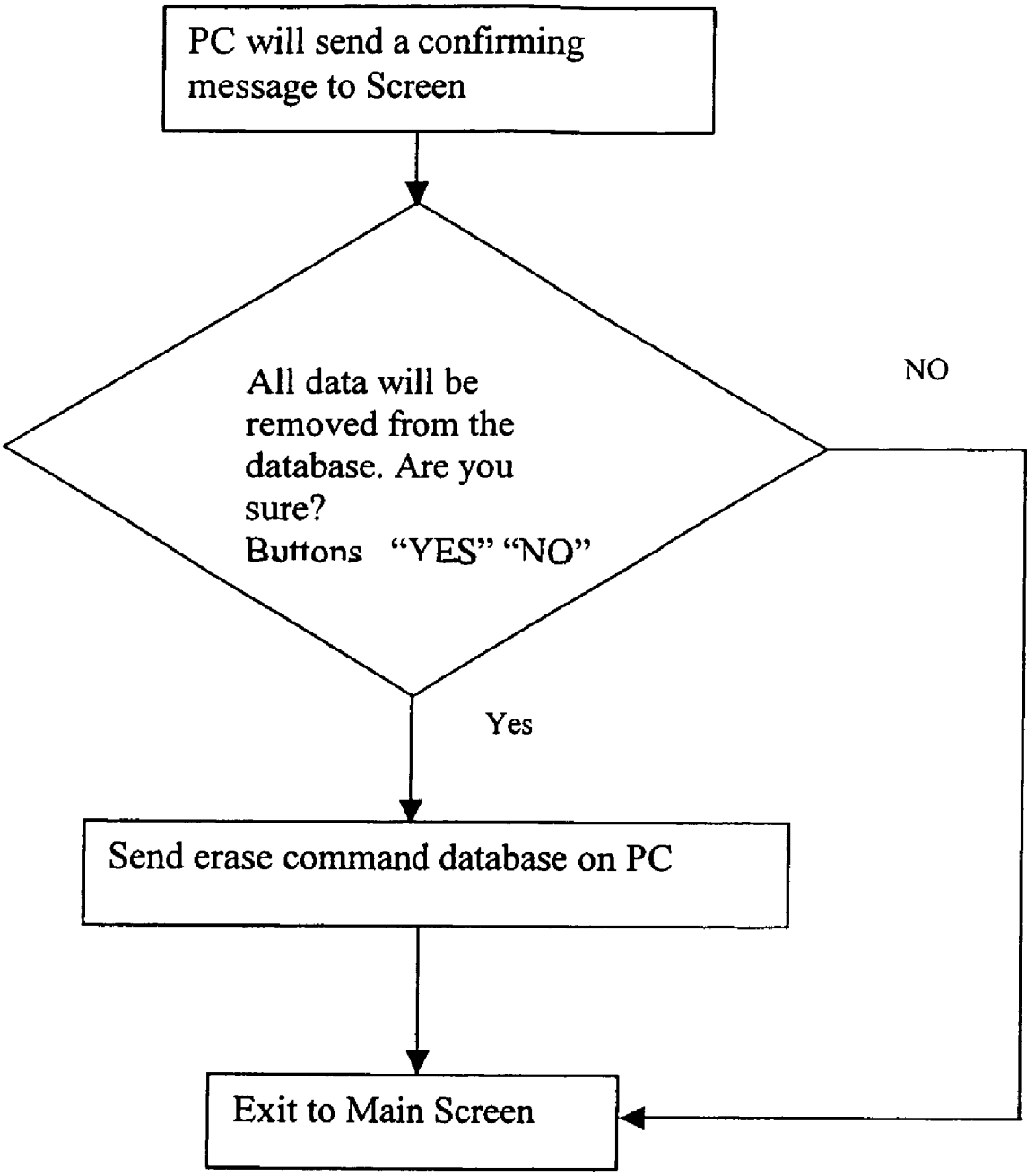
PC will send a confirming message to Screen
All data will be removed from the database. Are you sure?
Buttons "YES" "NO"
NO
Yes
Send erase command database on PC
Exit to Main Screen

Figure 15n

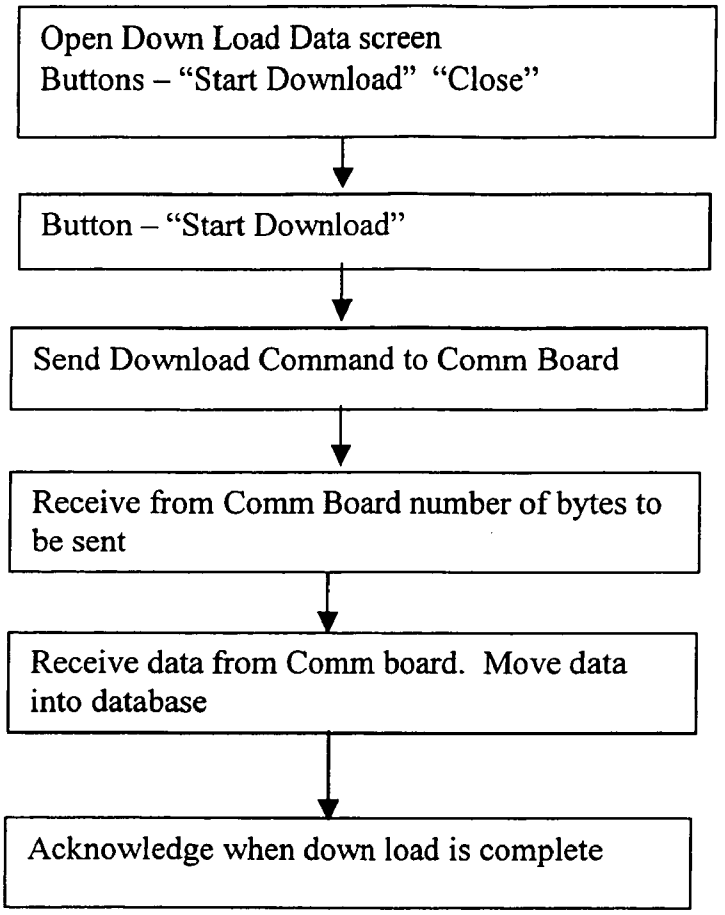

Figure 15o

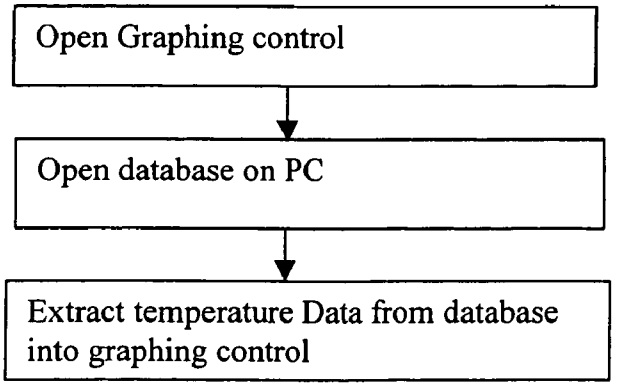

Figure 15p

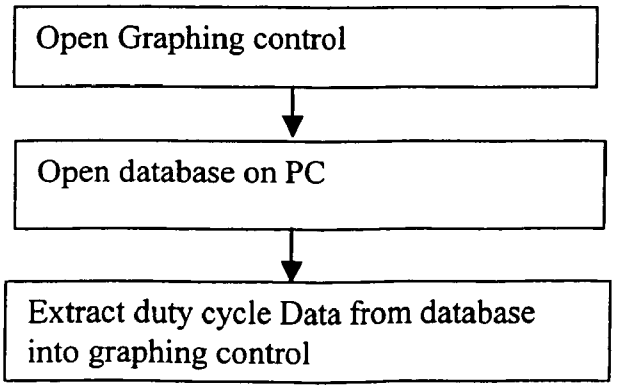

Figure 15q

REFRIGERATION UNIT CONDENSATION PREVENTION

FIELD OF THE INVENTION

This invention relates to frame and/or door heating to remediate condensation build-up in refrigerated display cases, and, more particularly, relates to sensing and operating devices and methods for activation and deactivation of such heating.

BACKGROUND OF THE INVENTION

Condensation build up on commercial refrigeration display case doors can cause door damage and presents a safety hazard if runoff from the door(s) and/or case frames accumulates on adjacent floors. Currently, in most commercial installations, in order to prevent excessive condensation build-up at display case doors and frames, the doors and frames are heated utilizing internal frame heaters operating at 100% duty cycle time (and incurring correspondingly high energy costs).

Devices have been heretofore suggested and/or utilized to control condensation without running heaters at 100% duty cycle times. One approach has utilized a detector to directly sense the presence of condensation on the freezer door or frame and, responsive thereto, activate the internal frame/door heaters when condensation is sensed. The heaters then are run for a fixed duration or until moisture has evaporated. These devices have, however, not always proven successful. For example, detector failure due to environmental contamination or poor manufacturing tolerances of moisture sensors in general is common. Such detector failure can result in either frame/door heaters remaining off (thus failing to inhibit dangerous condensation build-up and runoff) or the heaters remaining on (thereby achieving no energy savings). Moreover, such devices are merely reactive, activating heaters only after potentially damaging and dangerous condensation has formed. (see the DOOR MISER XP by Door Miser, LLC and U.S. Pat. No. 5,899,078, for examples).

Other devices have suggested condensation control utilizing dew point calculation. Monitoring air temperature, relative humidity and surface temperatures to initiate condensation control events has been utilized in a variety of applications including refrigeration (see, for example, U.S. Patent Publication No. US 2004/0050072 A1 and U.S. Pat. Nos. 6,470,696, 5,778,689, 5,778,147, and 4,127,765). Some such devices or systems have utilized temperature sensing of both cold surfaces and the surrounding ambient air in condensation control response calculations. As is known, when a cold surface temperature is equal to or lower than the dew point of the ambient air, condensation forms on the cold surface.

Such devices and systems have not proven altogether successful, however, due to inaccuracy of temperature readings, particularly where both cold and warm environments are adjacent one another such as is found at commercial freezer/refrigeration display cases. Failure to configure such systems to enhance accuracy of readings has resulted in erratic condensation control, on some occasions wasting energy unduly heating frames/doors, on other occasions responding late or otherwise inadequately to condensation formation, and/or on still other occasions failing to control appropriate heater cycling (i.e., shut-off) with consequent loss of efficiencies. Some such systems, utilized in fields not related to the problem of condensation at freezer doors, have addressed the problem of erratic temperature readings by

artificially cooling the temperature sensors while heaters are powered on to counter the affect. This approach, however, is not feasible in large commercial freezer display installations where size and space are limited and where the cost for such counter measures are not easily absorbed (and not likely to be tolerated). Finally, most heretofore known systems employing dew point sensors for condensation control remain reactive, not proactively based on anticipation of condensation events. Further improvement could thus still be utilized

SUMMARY OF THE INVENTION

The purpose of the apparatus, systems and methods of this invention is to efficiently eliminate door and frame condensation at widely utilized commercial freezer/refrigeration display cases. The invention is proactive in preventing condensation from forming by activating frame/door heaters before the dew point temperature at frame and door surfaces is reached. Power is then cycled off at a set point above dew point to save energy. This is accomplished by configuring apparatus of this invention to provide highly accurate sensing of frame temperature and dew point by thermally isolating temperature sensors and constantly updating data to reliably provide the ability to accurately anticipate condensation at case surfaces. The invention eliminates door damage and runoff safety hazards due to condensation build-up, efficiently cycles duty time of frame/door heaters thus lowering the installation's energy costs, and requires no expensive countermeasures to maintain accuracy and efficacious performance.

The condensation control apparatus of this invention includes a frame temperature sensing unit adapted for monitoring temperature of either the door or case of a display case. The frame temperature sensing has temperature sensor mounted on a carrier. A dew point sensing unit is adapted for monitoring ambient air temperature and relative humidity outside of the display case and includes a carrier having at least one dew point sensing component thereat.

A control unit is connected with the sensing units and includes a processor connected for activating the display case frame/door heater when monitored display case door or frame temperature drops below a preselected set point above a dew point value derived from monitored ambient temperature and relative humidity. The processor also deactivates the frame/door heater when monitored display case door or frame temperature rises above a second preselected set point above the dew point value. Housing for locating the sensing units includes structure establishing thermal isolation of the sensing units by minimizing heat transfer contacts with the housing. The temperature sensor and the dew point sensing component are located amid insulating air pockets formed by the structure of the housing. The housing and control unit are mountable at the display case.

The system of this invention further includes the sensing and control apparatus located at each display case in an array of display cases. An internal case temperature sensing unit is positionable inside the display case and connected with the control unit processor. The processor stores data related to readings at the sensing units and operation of the frame/door heater, and a communication control unit associated with the processor enables coordination of programming and data download access to the processor.

The method of this invention is for condensation control at a refrigerated display case having at least one door, a frame and at least one frame/door heater. The steps of the method include placing a temperature sensing unit in contact

with the display case frame to monitor case frame temperature and mounting a dew point sensing unit on the display case to monitor ambient air temperature and relative humidity outside the display case. The monitored case frame temperature, ambient air temperature and relative humidity are utilized to anticipate formation of condensation at the display case and activate and deactivate the frame/door heater responsive thereto.

It is therefore an object of this invention to provide apparatus, systems and methods for efficient elimination of door and frame condensation at widely utilized commercial freezer/refrigeration display cases.

It is another object of this invention to provide apparatus, systems and methods for elimination of door and frame condensation at freezer/refrigeration display cases that proactively prevents condensation from forming by activating frame/door heaters before dew point temperature at frame and door surfaces is reached.

It is still another object of this invention to provide apparatus for efficient elimination of door and frame condensation at freezer/refrigeration display cases that are configured to accurately sense frame temperature and dew point by thermally isolating temperature sensors and that are constantly data updated to reliably provide the ability to accurately anticipate condensation at case surfaces.

It is yet another object of this invention to provide apparatus, systems and methods utilized with freezer/refrigeration display cases that eliminate door damage and runoff safety hazards due to condensation build-up, efficiently cycle duty time of frame/door heaters thus lowering the installation's energy costs, and require no expensive countermeasures to maintain accuracy and performance of the apparatus and systems.

It is another object of this invention to provide condensation control apparatus for a refrigerated display case having at least one door, a frame and at least one frame/door heater, the apparatus including a frame temperature sensing unit adapted for monitoring temperature of one of the display case door or display case frame and including a carrier having a temperature sensor thereat, a dew point sensing unit adapted for monitoring ambient air temperature and relative humidity outside of the display case and including a carrier having at least one dew point sensing component thereat, a control unit connected with the sensing units and including processing means connected for activating the display case frame/door heater when monitored display case door or frame temperature drops below a preselected set point above a dew point value derived from monitored ambient temperature and relative humidity, and housing means for locating the sensing units including structure establishing thermal isolation of the sensing units by minimizing heat transfer contacts between the sensing units and the housing means and locating the temperature sensor and the at least one dew point sensing component amid insulating air pockets formed by the structure of the housing means.

It is still another object of this invention to provide a system for condensation control at an array of refrigerated display cases, the cases each having at least one door, a frame and at least one frame/door heater, the system including sensing and control apparatus configured for location at each display case in the array of display cases, the apparatus including a frame temperature sensing unit adapted for mounting at the display case for monitoring temperature of one of the display case door or display case frame, a dew point sensing unit adapted for mounting at the display case for monitoring ambient air temperature and relative humidity outside of the display case, an internal case temperature sensing unit positionable inside the display case, and processing means mountable at the display case and connected for activating the display case frame/door heater when monitored display case door or frame temperature drops below a first preselected set point above a dew point value derived from monitored ambient temperature and relative humidity, for deactivating the frame/door heater when monitored display case door or frame temperature rises above a second preselected set point above the dew point value, and for storing data related to readings at the sensing units and operation of the frame/door heater, and a communication control unit associated with the processing means for coordinating programming and data download access to the processing means of the apparatus.

It is yet another object of this invention to provide a method for condensation control at a refrigerated display case having at least one door, a frame and at least one frame/door heater, the method including the steps of placing a temperature sensing unit in contact with the display case frame to monitor case frame temperature, mounting a dew point sensing unit on the display case to monitor ambient air temperature and relative humidity outside the display case, and utilizing monitored case frame temperature, ambient air temperature and relative humidity to anticipate formation of condensation at the display case and activating and deactivating the frame/door heater responsive thereto.

With these and other objects in view, which will become apparent to one skilled in the art as the description proceeds, this invention resides in the novel construction, combination, and arrangement of parts and method substantially as hereinafter described, and more particularly defined by the appended claims, it being understood that changes in the precise embodiment of the herein disclosed invention are meant to be included as come within the scope of the claims.

BRIEF DESCRIPTION OF THE DRAWINGS

The accompanying drawings illustrate a complete embodiment of the invention according to the best mode so far devised for the practical application of the principles thereof, and in which:

FIG. **1** is a diagrammatic illustration of one embodiment of the condensation prevention apparatus and system of this invention;

FIG. **2** is an exploded view of the local controller unit of the apparatus of this invention;

FIG. **3** is a perspective view of the case temperature sensor and housing of the apparatus of this invention;

FIG. **4** is an exploded view of the sensor/housing of FIG. **3**;

FIG. **5** is a sectional view of the sensor/housing of FIG. **3**;

FIG. **6** is an illustration showing positioning of the sensor/housing of FIG. **3**;

FIG. **7** is an exploded view of the dew point sensor and housing of the apparatus of this invention;

FIG. **8** is a reverse exploded view of the sensor/housing of FIG. **7**;

FIG. **9** is an illustration showing positioning of the sensor/housing of FIG. **7**;

FIG. **10** is an exploded view of an alternative locational, housing and mounting configuration for the sensors/housings illustrated in FIGS. **3** and **7**;

FIG. **11** is a sectional illustration of the sensors/housing of FIG. **10** in a first mounting;

FIG. **12** is an illustration showing positioning of the sensors/housing of FIG. **10** in an alternative mounting;

FIG. **13** is an electronics block diagram of the apparatus of this invention;

FIGS. **14***a* through **14***j* are flow diagrams illustrating program control of local controller components and communications modules of the apparatus of this invention; and

FIGS. **15***a* through **15***q* are flow diagrams illustrating program control at centralized processing (an on- or off-site personal computer for example).

DESCRIPTION OF THE INVENTION

The system of this invention is illustrated in FIG. **1** in association with a common commercial freezer/cooler display unit **21** including a display container **23** having a frame (not shown in this FIGURE) and doors **25** in frame **27** (hereinafter, refrigeration case(s)). Up to fifteen such cases **21** can be served by the system as currently configured (though greater or fewer cases could be accommodated). Each case **21** is provided with a local controller unit **31** connected with an array of case sensors including internal case temperature sensor **33**, external case frame temperature sensor **35** and dew point sensor **37**. The array of sensors may be hard wired (as shown herein) to unit **31** at each case **21** through frame members, or may be configured to function wirelessly utilizing known technologies. While separate frame temperature and dew point sensors **35** and **37** are shown in this FIGURE, an alternate configuration that combines both sensors into one housing is shown hereinafter. Sensor mounting positions may be selected as desired, though the configuration illustrated in FIG. **1** is preferred where the sensors are separately housed.

Controller unit **31** is illustrated in FIG. **2**. AC power connector **41**, switching relay **43**, transformer **45**, internal case temperature sensor connection (an RJ-22 connector for example) **47**, frame temperature sensor and dew point sensor connectors (RJ-11 type connectors, for example) **49** are located on circuit board **51**. Microprocessor **53** is located on board **51**, as are in-coming and out-going connectors **55** (RJ-45 type connectors, for example) utilized so that a number of serially connected control units **31** are connectable with a single communication board/transmitter/receiver **57** in communication with receiver/transmitter/centralized processing **59** (FIG. **1**). LED's **65** and **67** (preferably green and red, respectively) on board **51** flash to indicate a status update from central processing **59** to microprocessor **53** (LED **65**) and to indicate that relay **43** has switched power on to frame/door heaters (LED **67**). Reset/programming interface **71** is mounted between LED's **65**/**67** at board **51**.

Board **51** is maintained in housing **75** including first and second housing portion **77** and **79**, respectively, with all connectors, LED's and user interfaces provided with access openings therethrough. Housing **75** is configured to be mounted between freezer door frame mullions where case lighting is typically located (thus providing AC power routing access). The housing is designed to be less than the height and width of a typical heretofore known and utilized mullion lighting lens cover adapted for such cases **21**.

Controller unit microprocessor **53** can be calibrated to initiate operations anywhere above or below calculated dew point. Adjustments can be made from central processing **59** with wireless communication via the communications board/transmitter/receiver **57** connected to controller unit **31**. Central processing **59** (a PC for example) receives data from units **31** via communications board/transmitter/receiver **57**, including data enabling tracking, storing and making available reports of the history of ambient air temperature and humidity from dew point sensor **37**, case frame and internal case temperatures from sensors **35** and **33**, respectively, and power consumption of door heaters (all as shown herein in FIG. **15**). This information can be used to improve energy efficiency by recalibrating operating ranges of the apparatus and system of this invention, as well as for improved operational cost accounting.

The internal case temperature must remain below FDA approved levels or food will spoil, such being both a health concern as well as an expense to the installation for potential loss of goods. It has heretofore been difficult to determine if temperature are within guidelines 24 hours a day. Utilization of the apparatus and system of this invention, however, and particularly utilization of internal case temperature monitoring by sensor **33** through controller unit **31**, allows such detailed tracking and reporting. Moreover, the apparatus and system are configured to automatically send an alarm (one or both locally and by autodialer to a responsible technician) if maximum allowable internal case temperature as programmed is exceeded. If central processing **59** receives an alarm message from any of the local control units **31** in the system, an alarm or auto dial via a modem is initiated and a message is sent with regard thereto, including the exact case in the system wherein temperature has deviated (see FIGS. **14** and **15**).

Temperature sensors **33** and **35** are similar and are housed as illustrated in FIGS. **3** through **6** (for purposes of description herein, only the housing of sensor **35** will be described since sensor **33** in much simpler to implement and maintain). Temperature sensor **35** housing **83** includes cover **85**, sensor locating base **87** and circuit board/carrier **89** locating temperature sensor **35** including temperature sensing chip **91** at one surface thereof. This assembly is mounted to case frame unit or door frame unit **93** of display case **21** utilizing screws or adhesive, with base **87** adjacent frame unit **93** as shown in FIG. **5**. Cabling from controller unit **31** is routed through cable protector **95** at base **87**.

Temperature sensing chip **91** is located on board/carrier **89** so that when received in housing **83** it is located through sensor opening **99** at base **87**. With proper materials sizing, chip **91** will be in direct contact with the surface of unit **93** being monitored when base **87** is mounted on frame unit **93**. Housing **83** should be located at the coldest spot on the exterior of the freezer. That spot is usually in the center of the case between the bottom of a door **25** and door or case frame unit **93** (see FIG. **6**). Door and frame heaters **103** are located inside doors and/or frames of cases **21**.

Housing **83** is configured at cover **85** and base **87** to thermally isolate sensing chip **91** from the warming effects of ambient air temperature in the vicinity of the chip and transfer thereof by the housing to the chip. Air space pockets **105** and **107** above and around chip **91**, respectively, and limited housing contact (see FIG. **5** wherein only a single locating post **109** maintains board/carrier **89** at it position in housing **83**) isolate chip **91** from the housing. By thus configuring board/carrier **89** (made typically of FIBERGLASS material) and housing **83** (preferably made of plastic such as acrylonitrile butadiene styrene polycarbonate) little transfer of heat to sensor chip **91** occurs, assuring accurate measurement of surface temperature of unit **93** unaffected by inaccuracies introduced as artifact into the measurement by ambient air temperature conditions in the vicinity of housing **83** (accuracy of frame temperature measurements has been documented by testing to be within 1 or 2 degrees Centigrade).

Air space pocket **105** is created by the depth of cover **85** adjacent board/carrier **89**, the cover also insulating the sensor chip from the ambient. Air space pocket **107** is created by opening **99** having an opening area greater than surface area of chip **91**. These improvements allow accurate tracking and monitoring of case frame temperature, used not only for precisely timed heater activation, but also for better timing of heater deactivation given the fast rise in frame temperature after frame/door heaters **103** are activated to prevent condensation.

Turning now to FIGS. **7** through **9**, dew point sensor **37** is housed in housing **115** including cover **117** and mounting base **119**. Circuit board/carrier **121** maintains sensor **37** circuitry including dew point sensing chip **123**. Dew point sensing chip **123** is located, when assembled, in opening **129** in the face of cover **117**, opening **129** including protective shield **131** having gaps **133** along the sides thereof to allow airflow over sensing chip **123** for measuring humidity and ambient air temperature. A membrane **141** covers opening **143** at sensing chip **123** to protect internal humidity and temperature sensing components from foreign matter such as cleansers and the like. The design of cover **117** protects membrane **141** without preventing airflow to sensing chip **123**.

Housing base **119** includes cabling routing protector **145** for introducing and stabilizing cabling to sensor **37**. Spacer ribs **147** at base **119** assure an insulating air gap between housing **115** and its adjacent mounting surface. Housing **115** is preferably mounted to door or case frame unit **151** located at the top of case **21**, as shown in FIG. **9**, and between the frame unit and door **25** so that the cold air exiting the case when a door is opened will not affect the sensor readings.

Housing **115** is configured to thermally isolate dew point sensor **37** so that accuracy of the dew point sensor is maintained within to 1 to 3 degrees Centigrade. First, by assuring that sensor **37** is held away from the unnaturally heated frame (either cooled by the freezer or heated by frame heaters) with spacer ribs **147**, the frame temperature will not influence the relevant dew point readings (primarily ambient air temperature). The air pocket (**155** in FIG. **9**) behind board/carrier **121** and extending all the way to the mounting surface at unit **151** prevents thermal transfer through housing **115** from the mounting surface of frame unit **151**. The cover includes openings **157** at opposite ends thereof to provide room temperature airflow at air pocket **155** of room temperature air. Housing mounting surface **159** is perpendicular to the dew point sensor board/carrier **121**, and may be mounted by screws or (preferably) adhesive.

By thus configuring board/carrier **121** (made typically of FIBERGLASS material) and housing **115** (preferably made of plastic such as acrylonitrile butadiene styrene polycarbonate) little transfer of heat to sensor chip **123** occurs, assuring accurate measurement of ambient air temperature and humidity unaffected by inaccuracies introduced as artifact into the measurement by freezer case **21** frame temperature conditions in the vicinity of housing **115**. Housing **115** is configured utilizing board support protrusions **163** defining retainer pockets **165** having minimal contact surface along the outer edges of board/carrier **121** to maintain board positioning, thus further reducing thermal transfer. Depth of housing **115** behind pockets **165** establishes air pocket **155**.

When door and frame heaters are activated it is important that they do not affect the reading from sensor **37** of actual room air temperature. This design sufficiently isolates sensor **37** from door and frame temperature swings, thereby preserving accuracy of readings of ambient air temperature and thus accuracy of dew point calculation. Absent such thermal isolation, it is possible for shut-off of heaters to be delayed indefinitely. For example, under the influence of heaters, if temperature readings were to rise at an insufficiently isolated dew point sensor then calculated dew point would increase. In such case, the doors would have to be heated further as the dew point is chased. Heating the doors further would raise the dew point still more in this scenario, thereby beginning an upwardly spiraling cycle until the heaters reach their maximum temperature and finally power off.

Turning now to FIGS. **10** through **12**, an alternative embodiment for sensors **35** and **37** housing is illustrated wherein housing **115** is utilized to house both sensors. Thus all elements of the housing as heretofore described are the same unless otherwise specified hereinbelow. Sensor **35** is maintained at cabling routing protector **145** at retainer pockets **175** (one on each side, though only one side is shown in the drawings) defining ledges having minimal contact surface with board/carrier **89** to maintain the board, thus reducing thermal transfer through the housing to the board. A single locating post **177** may be utilized to further stabilize the board if necessary. As shown in FIG. **11**, sensor **91** and board/carrier **89** are completely surrounded by an insulating dead air pocket established by the depth of protector **145**. This housing may be mounted either above (FIG. **11**) or below (FIG. **12**) door **25** of a case **21**, and retains all the thermal isolation advantages discussed for the individually housed units as discussed above.

FIG. **13** illustrates the electronics utilized by the apparatus of this invention. Incoming AC power is provided to relay **43** and is transformed at input/transformer **41**/**45** (12 volt DC output) for use by controller unit **31** and sensors **33**, **35** and **37**. Sensors **33** and **35** inputs are A/D converted and input to the central processing unit microprocessor **53** embodying the various comparitors and look up tables utilized (Sensor **37** is A/D converted at the sensor). LED's **65**/**67** are controlled in response to microprocessor functions, and microprocessor programming can be conducted on-site through connector/interface **71**. Communications flow between microprocessor **53** and central processing **59** is monitored and controlled by communications board **57** in cooperation with microprocessor **53** and central processing **59**. Relay activity is monitored and controlled by microprocessor **53** in response to set point achievement as specified in software and as sensed by the sensor array.

Thermal isolation of sensors **35** and **37** thus insure the accuracy of the sensors and thus the efficacy of the apparatus both in terms of its ability to anticipate condensation formation as well as its ability to save on energy expenses due to overheating of doors and frames or improper cycling of heaters. Overall functioning of the apparatus and system of this invention are as illustrated in FIGS. **14***a* through **14***j* and **15***a* through **15***q*. Heaters are activated just above dew point and thus just before moisture appears on freezer surfaces. Controller unit **31** may utilize any known sensor(s) **37** for monitoring ambient air temperature (for example, thermistors may be utilized for the temperature sensors herein, including by sensors **33** and **35**) and relative humidity (capacitive polymer or thin film type sensor, for example, may be utilized wherein capacitance is proportional to the relative humidity of surrounding air). Combination sensors providing relatively accurate dew point sensing are known and commercially available. Microprocessor **53** looks up the dew point value from a stored table. Input from monitored dew point sensor **37** and frame temperature sensor **35** are utilized in conjunction therewith to determine when to relay on the frame/door heaters as the frame temperature

approaches the dew point (once the monitored frame temperature drops below a preselected set point above the dew point). Once the monitored frame temperature rises to a preselected set point above the dew point, the heaters are relayed off. On-board software builds a table of over 600 values into the dew point lookup table, set points, as well as other values, being updatable in real time from central processing. The look up table can be reprogrammed through interface **71**.

The entire system preferably includes wireless communication for receiving data from multiple control units **31** at different cases **21**. Controller unit **31** and communications board/transmitter/receiver **59** transfer data to central processing **59** for data viewing, tracking and report preparation. Central processing **59** is capable of printing efficiency reports, remote recalibration of heater operations and dial up warning programs should any freezer have a failure. Each controller unit **31** tracks internal case temperatures and will warn of unsafe temperatures or freezer failure. Unit/system calibration or recalibration is typically only required when sensors might be influenced by freezer temperatures. Freezer temperatures primarily influence sensor readings dependent on where sensors are mounted at installation. The case frame is not as cold at the top of the freezer as the bottom, so the operating range of the sensors and unit **31** in the combined sensor housing configuration of FIG. **10** are calibrated for the alternative locations.

What is claimed is:

1. Condensation control apparatus for a refrigerated display case having at least one door, a frame and at least one frame/door heater, said apparatus comprising:

a frame temperature sensing unit adapted for monitoring temperature of one of the display case door or display case frame and including a carrier having a temperature sensor thereat;

a dew point sensing unit adapted for monitoring ambient air temperature and relative humidity outside of the display case and including a carrier having at least one dew point sensing component thereat;

a control unit communicating with said sensing units and including processing means connected for activating the display case frame/door heater when monitored display case door or frame temperature drops below a preselected set point above a dew point value derived from monitored ambient temperature and relative humidity; and

housing means for locating said sensing units including structure establishing thermal isolation of said sensing units by minimizing heat transfer contacts between said sensing units and said housing means and locating said temperature sensor and said at least one dew point sensing component amid insulated air pockets formed by said structure of said housing means.

2. The apparatus of claim **1** wherein said housing means includes a frame temperature sensing unit housing, said frame temperature sensing unit housing including a base and a cover, said cover having a depth creating a first one of said air pockets at one side of said temperature sensing unit and said base including an opening for receiving said temperature sensor therethrough, said opening having an opening area greater than surface area of said temperature sensor thus establishing a second one of said air pockets around said temperature sensor.

3. The apparatus of claim **2** wherein said frame temperature sensing unit housing includes a single locating post at said cover for securing position of said temperature sensing unit relative to said cover.

4. The apparatus of claim **1** wherein said housing means includes a dew point sensing unit housing, said dew point sensing unit housing including a mounting base and cover, said cover including a cover face opening therethrough for receiving said at least one dew point sensing component therein, said cover face opening including a protective shield thereover having air gaps therearound allowing air flow between said protective shield and said cover and thus over said at least one dew point sensing component.

5. The apparatus of claim **4** wherein said cover of said dew point sensing unit housing includes opposite end openings to establish ambient air flow through said dew point sensing unit housing.

6. The apparatus of claim **4** wherein said mounting base of said dew point sensing unit housing includes protrusions establishing retaining pockets receiving said carrier of said dew point sensing unit at outer edges of said carrier and further establishing a first one of said air pockets amid said protrusions and adjacent to said carrier.

7. The apparatus of claim **1** wherein said housing means includes a cover and a base, said cover including a cover face opening therethrough for receiving said at least one dew point sensing component therein, said cover face opening including a protective shield thereover having air gaps therearound allowing air flow between said protective shield and said cover and thus over said at least one dew point sensing component, and said base having depth creating a first one of said air pockets at least at one side of said temperature sensing unit and a second one of said air pockets at one side of said dew point sensing unit.

8. A system for condensation control at an array of refrigerated display cases, the cases each having at least one door, a frame and at least one frame/door heater, said system comprising:

sensing and control apparatus configured for location at each display case in the array of display cases, said apparatus including a frame temperature sensing unit adapted for mounting at the display case for monitoring temperature of one of the display case door or display case frame, a dew point sensing unit adapted for mounting at the display case for monitoring ambient air temperature and relative humidity outside of the display case, an internal case temperature sensing unit positionable inside the display case, and processing means mountable at the display case and connected for activating the display case frame/door heater when monitored display case door or frame temperature drops below a first preselected set point above a dew point value derived from monitored ambient temperature and relative humidity, for deactivating the frame/door heater when monitored display case door or frame temperature rises above a second preselected set point above said dew point value, and for storing data related to readings at said sensing units and operation of the frame/door heater; and

a communication control unit associated with said processing means for coordinating programming and data download access to said processing means of said apparatus.

9. The system of claim **8** further comprising a central processing unit and wherein said communication control unit includes a transmitter/receiver for wireless communication with said central processing unit.

10. The system of claim **8** wherein said processing means of said apparatus is separately housed in a housing having dimensions selected so that said housing is mountable between standard door frame mullions provided at the display case.

11. The system of claim **8** wherein said processing means of said apparatus includes a reset/programming interface.

12. The system of claim **8** wherein said frame temperature sensing unit and said dew point sensing unit are mounted together in a housing.

13. The system of claim **8** further comprising housing means for locating said temperature sensing unit and said dew point sensing unit and including structure establishing thermal isolation of said sensing units by minimizing heat transfer contacts between said temperature sensing unit and said dew point sensing unit and said housing means and locating said temperature sensing unit and said dew point sensing unit amid insulating air pockets formed by said structure of said housing means.

14. A system for condensation control at a refrigerated display case having at least one door, a frame and at least one frame/door heater, said system comprising:

a temperature sensing unit in contact with the display case frame to monitor case frame temperature;

a dew point sensing unit on the display case to monitor ambient air temperature and relative humidity outside the display case; and

control means for receiving data from said sensing units and utilizing monitored case frame temperature, ambient air temperature and relative humidity to anticipate formation of condensation at the display case and activating and deactivating the frame/door heater responsive thereto.

15. The system of claim **14** further comprising means for thermally isolating said dew point sensing unit from variations in temperature of the display case frame or display case door.

16. The system of claim **14** further comprising means for thermally isolating said temperature sensing unit from variations in temperature of ambient air.

17. The system of claim **14** further comprising an internal case temperature sensing unit mounted inside the display case and communicating with said control means for monitoring internal case temperature.

18. The system of claim **17** further comprising data storing means communicating with said control means for storing data related to readings at said sensing units and operation of the frame/door heater.

19. The system of claim **18** further comprising means for wirelessly accessing stored data at said data storing means.

20. The system of claim **14** wherein said means for wirelessly accessing data is configured for remotely updating control parameters at said control means utilized for monitoring case frame temperature, ambient air temperature and relative humidity to anticipate formation of condensation at the display case and activating and deactivating the frame/door heater.

* * * * *