Installation Instructions: Control Link ACC Anti-Condensate Controller System

Overview

The Control Link ACC Anti-Condensate Controller System (US Patent 7,340,907) is a stand-alone controller for anti-sweat heaters in glass door cases. The Control Link ACC varies anti-sweat heat based on dewpoint and temperature around the door frame, providing effective control of door sweat with the maximum amount of energy savings.

Components

Control Link ACC (P/N 810-6101)

The Control Link ACC (***Figure 1***) handles all aspects of anti-sweat heater control. The on-board processor calculates the required heater ON time based on the dewpoint and door temperature readings, and controls an on-board Triac to activate and deactivate the heaters.

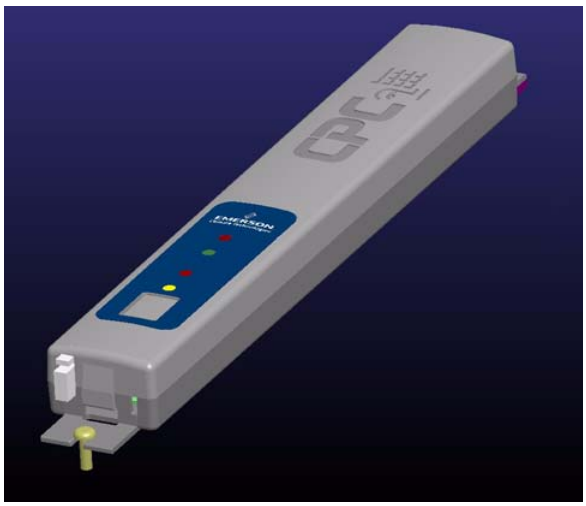

Figure 1 - Control Link ACC

The controller is designed to mount in the mullion between glass doors or in any other suitable electrical enclosure, such as a raceway or on the top of the case. The door frame temperature sensor and dewpoint sensor are mounted remotely and connect to this controller with cable harnesses.

Four LEDs can be viewed on the front of the plastic enclosure. They indicate the general status, heater ON/OFF state, MODBUS network transmit, and MODBUS network receive.

Dewpoint Sensor (P/N 809-6112)

The Control Link ACC uses an external dewpoint sensor (***Figure 2***) to measure the dewpoint of the outside air next to the case doors. This sensor is typically mounted directly above or to the side of the case doors.

The Dewpoint Sensor is supplied in a mountable enclosure with a12-foot jacketed cable with a four-wire pigtail connects the Control Link ACC to the dewpoint sensor.

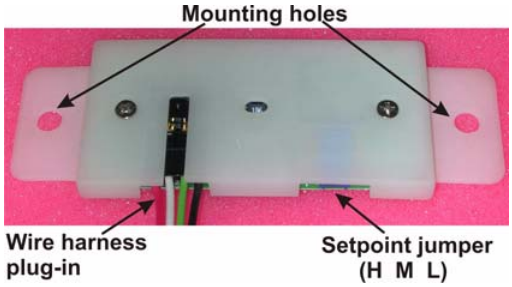

Figure 2 - Dewpoint Sensor (6112)

©2008 Emerson Climate Technologies Retail Solutions, Inc. This document may be photocopied for personal use.
Visit our website at http://www.emersonretailsolutions.com/ for the latest technical documentation and updates.

Exhibit 1064
Anthony v. ControlTec
IPR2025-00636

When Control Link ACC controllers are networked together via MODBUS, a single dewpoint sensor connected to one Control Link ACC may be shared by multiple Control Link ACC controllers.

Door Temperature Sensor (P/N 201-6008)

In addition to the indoor air dewpoint, the Control Link ACC also factors in the value of the temperature of the case door frame using an externally mounted temperature sensor. This small thermistor mounts to the coldest surface of the door frame.

The door temperature sensor is supplied with an 8-foot two-wire cable with Molex connector, which plugs into the Control Link ACC.

Figure 3 - Dewpoint Sensor (6111) (Discontinued)

Mounting the Control Link ACC

The Control Link ACC enclosure is designed to be mounted in a case mullion, but may also be mounted in the raceway or in a metal electrical enclosure on the top of the case. ***Figure 4*** shows examples of where the Control Link ACC may be mounted.

Use the two mounting tabs at the top and bottom of the enclosure to screw the enclosure to the case wall, raceway, or enclosure.

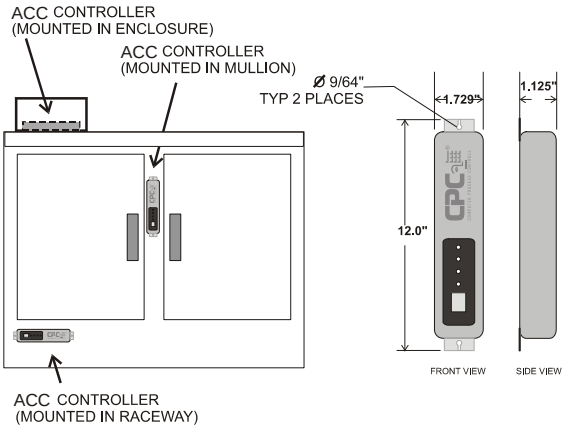

Figure 4 - Control Link ACC Mounting

The tab at the top end of the Control Link ACC (the end nearest the CPC logo) must be **securely mounted against a large heat-conductive surface**. This tab has a metal backing which acts as a heat sink, dissipating heat from the Triac that controls the heater. **The metal tab must be mounted against a conductive metal surface of at least 64 square inches** so heat can be conducted out of the controller. Failure to secure the top tab against the case mullion may cause controller overheating and shutdown.

Use 9/64” drill holes for mounting, and secure the Control Link ACC to the metal surface using #8-32 thread trilobular thread forming screws, Taptite II or equivalent (Ref. Ty-Bolts #SCHWSZ08043-TR). Mounting screws are not included with the Control Link ACC.

©2008 Emerson Climate Technologies Retail Solutions, Inc. This document may be photocopied for personal use.
Visit our website at http://www.emersonretailsolutions.com/ for the latest technical documentation and updates.

Wiring The Control Link ACC

Power And Heater Element Wiring

The four leads on the **top end** of the Control Link ACC enclosure are where the connections to supply voltage and the case door heater element(s) are made.

WARNING! DO NOT CONNECT THE POWER TO THE DEWPOINT SENSOR LEADS AT THE BOTTOM OF THE ENCLOSURE. The small-gauge leads at the bottom are the same colors, but they are for the dewpoint sensor. Connecting power to these leads will damage the board.

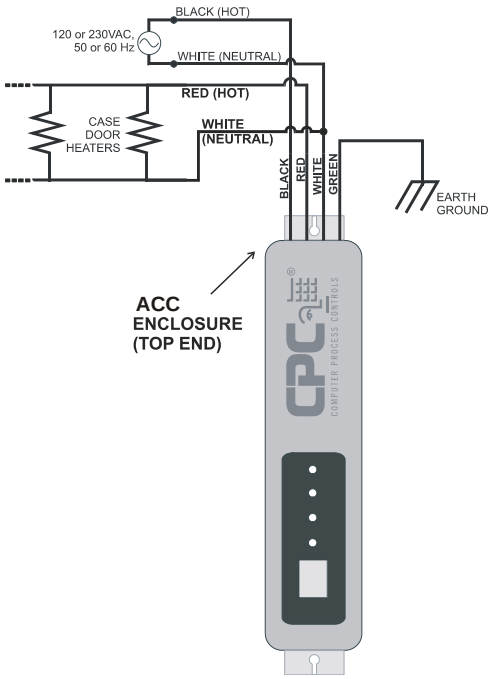

Figure 5 - Power/Heater Wiring

Connect the WHITE wire to the NEUTRAL side, and the BLACK wire to the HOT side of 120-230VAC, 50/60Hz line voltage.

The RED lead carries supply voltage when the door heater Triac relay is ON (closed). Connect the RED and WHITE leads to the case door heater elements. All heater elements in the door frame and all doors of that frame should be connected **in parallel** to the Control Link ACC.

Connect the GREEN lead on the controller to ground.

Ratings and Current Protection

The Control Link ACC's Triac is fused for 20A, 250V on the heater circuit, with a separate 1A fuse on the control components so that communication can continue even if the Triac's fuse blows. Neither fuse is field-replaceable; if a fuse on the Control Link ACC blows, the controller should be replaced. The maximum heater load is UL approved up to 13A.

©2008 Emerson Climate Technologies Retail Solutions, Inc. This document may be photocopied for personal use.
Visit our website at http://www.emersonretailsolutions.com/ for the latest technical documentation and updates.

Mounting and Wiring the Sensors

The Dewpoint Sensor

Placement

In order for the Control Link ACC to function properly, the dewpoint sensor must be placed where it can measure the dewpoint of the air **outside** the case. Mount the sensor underneath the top side of the case in the area just above the top of the doors (see ***Figure 6***). If the sensor cannot be placed there, mount the sensor on top of the case.

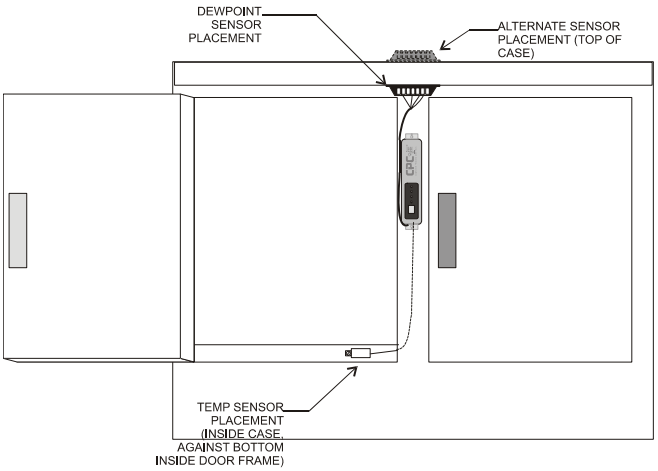

Figure 6 - Sensor Placement

Do NOT mount the dewpoint sensor near the bottom of the case or any place where cold air from the case can affect the sensor reading. Avoid mounting the sensor in an area with excessive water spray or moisture, extremely dirty environments, near heat sources, or in the direct path of HVAC returns.

Note About Using RTV Sealants

Placing the dewpoint sensor in either of these locations may require a hole to be drilled in the case to run the wire from the sensor to the Control Link ACC. Use caution when sealing this hole with RTV sealants — the sensor element is sensitive to high concentrations of RTV. Do not let any RTV sealants touch the sensor element, and keep the sensor element as far as possible from where the hole is sealed.

Dewpoint Sensor Mounting Dimensions

The Dewpoint Sensor is provided with a pair of mounting holes with 2.75” spacing. Choose a location as close to the case doors as possible, preferably directly over the doors or (if necessary) on top of the case. Secure the sensor to the mounting location with two screws (not supplied —recommended size #6 x ¼” long with sheet metal threads). Hex head is recommended, but a slotted head can be used. Note that the enclosure allows clearance for a nut driver on the screw head. ***Figure 7*** shows the mounting dimensions.

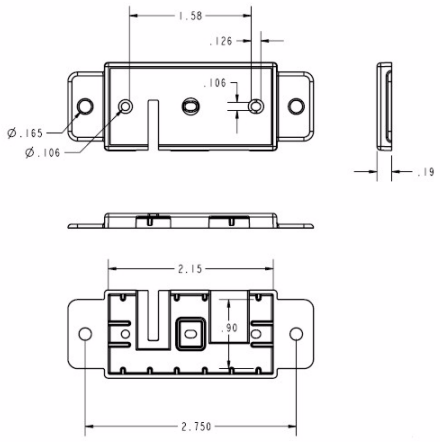

Figure 7 - Dewpoint Sensor Dimensions

It may be necessary to cut a 0.25”x0.25” notch in the edge of the metal frame behind the sensor for the wires to pass through.

©2008 Emerson Climate Technologies Retail Solutions, Inc. This document may be photocopied for personal use.
Visit our website at http://www.emersonretailsolutions.com/ for the latest technical documentation and updates.

Dewpoint Sensor Wiring

For wiring, the Dewpoint Sensor is provided with a 12-foot cable with a four-wire pigtail at the end (P/N 335-3200). Connect the cable to the dewpoint sensor leads at the **bottom** of the Control Link ACC enclosure, matching wire colors as shown in ***Figure 8***. CPC strongly recommends Dolphin Super B Wire Connectors (P/N 110-1000) for all crimp connections.

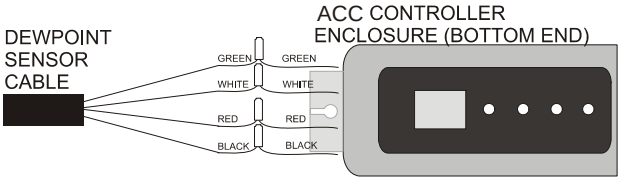

Figure 8 - Dewpoint Sensor Wiring

If the Control Link ACC will not have a dewpoint sensor connected to it, it is recommended you insulate the ends of the Control Link ACC's dewpoint sensor leads by capping them with Dolphin Super B Wire Connectors.

Dewpoint Sensor Storage

Prior to installation, dewpoint sensors should be stored separately from the cables. Do not store cables and sensors together for a long period of time in a closed box or bag. The sensor should be separated from the cables when a shipment is received and stored apart, preferably exposed to room air. The sensors can become contaminated by outgassing from the cable insulation if kept in a closed up box or bag with the cable. Contamination can be reversed with exposure to room air over a period of weeks or in a temperature/humidity chamber over a period of three days.

NOTE: To replace the dewpoint sensor for recalibration purposes, replace the entire assembly (keep the existing cable).

The Door Temperature Sensor

Placement

The Door Temperature Sensor should be placed in an area where it can measure the temperature of the door frame in the location on the door frame that stays the coldest. The coldest spot on a door frame is usually the bottom horizontal section of the stationary frame, under the center door (for cases with even-numbered doors), or near the center mullion (for cases with odd-numbered doors). Cooler doors may also be coldest at the top center of the frame. ***Figure 6*** on ***page 4*** shows an example of placement in a case with even-numbered doors — the sensor is placed under the door just to the left of the center mullion where the Control Link ACC is installed. **Do not mount the sensor inside the case mullion or anywhere outside the case.**

Mount the case door temperature sensor along the door frame inside the frame. Secure the sensor in place by screwing it to the door frame using the mounting hole.

The sensor is supplied with an 8-foot cable, with a Molex connector. Plug the connector into the matching socket at the bottom of the Control Link ACC enclosure.

©2008 Emerson Climate Technologies Retail Solutions, Inc. This document may be photocopied for personal use.
Visit our website at http://www.emersonretailsolutions.com/ for the latest technical documentation and updates.

Network Wiring and Configuration

If each Control Link ACC will be configured with its own dewpoint sensor, it is not necessary to network the Control Link ACC together. However, when networked, multiple Control Link ACC controllers may use a single dewpoint sensor. Furthermore, because the Control Link ACC is a MODBUS-compliant device, a site controller or gateway may eventually be programmed to communicate with the Control Link ACC controllers via MODBUS, supporting remote configuration and data acquisition.

The Control Link ACC supports networking of up to 63 controllers per network.

Wiring Types

CPC specifies Belden #8761 shielded twisted pair cables for use as I/O Network wiring (or Belden #82761 and Belden #88761 for plenum installations).

If the recommended cable is not available in your area, be sure the wiring meets or exceeds the following specs:

Shielded?	Yes
Conductor Type	Twisted Pair
Gauge	18 - 24 AWG
Capacitance between signal wires	31 pF/ft or less
Capacitance between signal and shield	59 pF/ft or less
Maximum Length	4000 ft/18 to 22 AWG 2500 ft/24 AWG
Nominal Impedance	120Ω±50Ω

©2008 Emerson Climate Technologies Retail Solutions, Inc. This document may be photocopied for personal use.
Visit our website at http://www.emersonretailsolutions.com/ for the latest technical documentation and updates.

MODBUS Networks and Daisy-Chaining

Control Link ACC must be networked in a single open communications loop, or **daisy chain**. A daisy chain connects all the Control Link ACCs together in a single unbranched series, and requires termination jumpers to be set on the controllers at either end of the chain. No branching or "star configurations" are allowed.

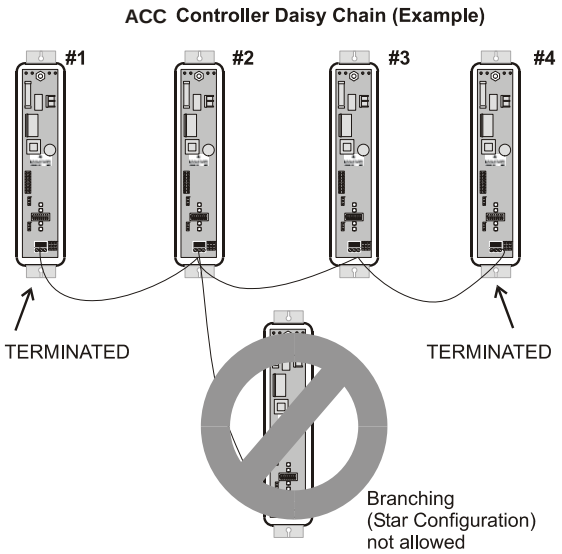

Figure 9 - Control Link ACC Daisy Chain

Step 1: Open the Control Link ACC Enclosure

> ***WARNING! Disconnect the supply power from the Control Link ACC before opening the enclosure. Opening the enclosure while the Control Link ACC is powered may result in electrocution.***

Connecting a Control Link ACC to a MODBUS network requires you to remove the top cover from the Control Link ACC enclosure. Press down the tab at the top end (power wiring side) of the enclosure, and remove front cover of the Control Link ACC. If the Control Link ACC is already mounted in the case mullion, you may have difficulty removing the front cover; if so, loosen the top mounting screw before pressing the tab.

Step 2: Connect the MODBUS Network Cable

MODBUS network cable has two conductors plus a shield. For each Control Link ACC, connect the two conductors to the 485+ and 485- terminals of the I/O network connector (at the bottom of the enclosure), making sure to use the same wire colors for each Control Link ACC connection. For example, if the conductor wire colors are BLACK and WHITE, use BLACK for all 485+ terminals and WHITE for all 485- terminals (or vice-versa). Connect the bare (SHIELD) wire to the center (0V) terminal.

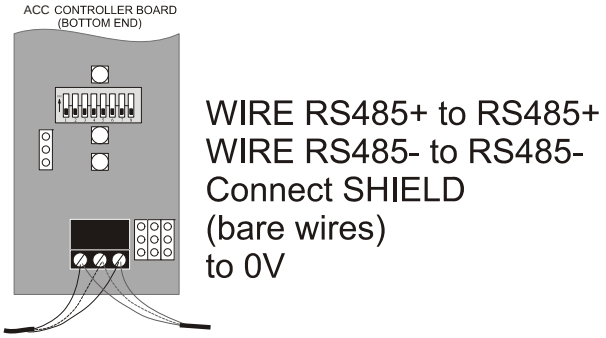

Figure 10 - Control Link ACC Network Connection

Step 3: Set the Network Address

NOTE: If you are networking Control Link ACC only for purposes of sharing a dewpoint sensor, you do not need to set a network address. ***Set all network address dip switches or jumpers to the DOWN (OFF) position****. This will allow the Control Link ACC to share a dewpoint sensor as long as the network is physically present and terminated correctly The network address is only necessary for assigning a network ID for MODBUS applications.*

©2008 Emerson Climate Technologies Retail Solutions, Inc. This document may be photocopied for personal use.
Visit our website at http://www.emersonretailsolutions.com/ for the latest technical documentation and updates.

Depending on the hardware revision, the Control Link ACC board has either eight dip switches or eight three-pin jumpers, located in between the controller and network status LEDs. Switches or jumpers 1-6 set the network ID for the controller. Switches 7 and 8 set the network baud rate and parity.

Each Control Link ACC that will use the MODBUS network must have a unique network ID. Number each controller in sequence, starting with 1. Refer to ***Figure 11*** for dip switch and jumper settings.

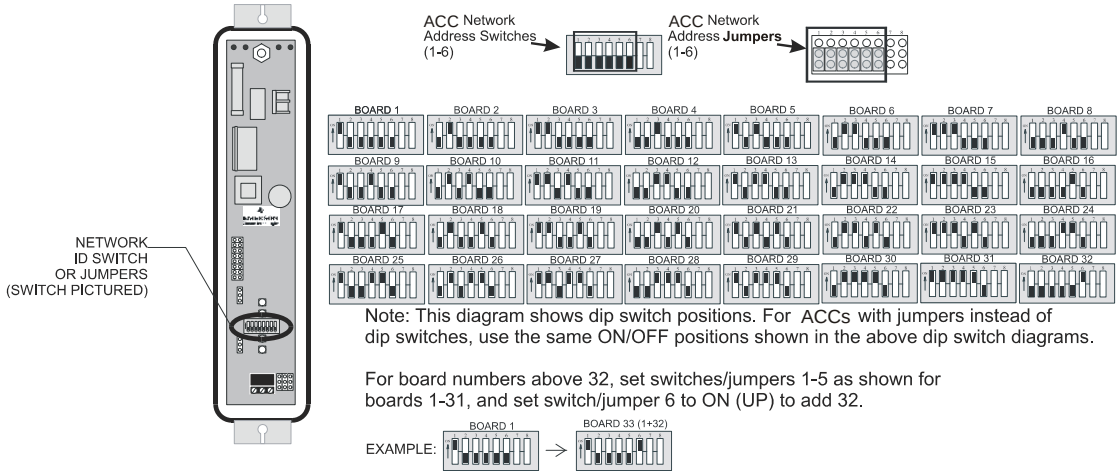

Figure 11 - Control Link ACC Network ID Dip Switch/Jumper Settings

Step 4: Set the Network Baud Rate and MODBUS Parity

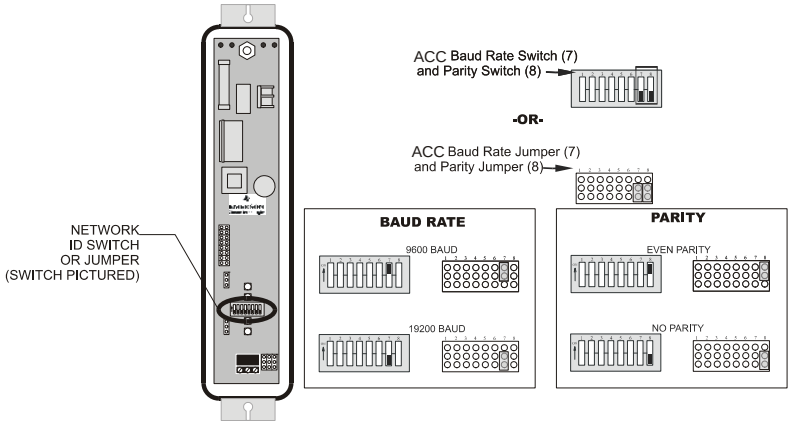

Figure 12 - Control Link ACC Network Baud Rate/Parity Dip Switch/Jumper

NOTE: If you are networking Control Link ACC only for purposes of sharing a dewpoint sensor, you do not need to set a baud rate or parity. ***Set all dip switches or jumpers to the DOWN (OFF) position****. This will allow the Control Link ACC to share a dewpoint sensor as long as the network is physically present and terminated correctly The dip switches or jumpers are only necessary for assigning a network ID for MODBUS applications.*

In order for the Control Link ACC to communicate with each other on the MODBUS network, they must all be set to communicate at the same baud rate and parity.

©2008 Emerson Climate Technologies Retail Solutions, Inc. This document may be photocopied for personal use.
Visit our website at http://www.emersonretailsolutions.com/ for the latest technical documentation and updates.

Switch/jumper 7 determines the baud rate at which the controllers communicate. When switch/jumper 7 is ON, the Control Link ACC will operate at 9600 baud. If switch/jumper 7 is OFF (default), the Control Link ACC will operate at 19200 baud. Switch/jumper 8 determines the MODBUS network parity. Some MODBUS-enabled site controllers require even network parity; to enable even parity, set switch/jumper 8 to the ON position. For site controllers that require no parity, set switch/jumper 8 to the OFF (default) position.

Step 5 - Terminate the End Devices

Once all Control Link ACCs are networked, you must terminate the end devices on the network. The Control Link ACC controller board has a set of three jumpers at the bottom right corner of the board that may be used to provide termination resistance.

To terminate an end device, set all three jumpers to the UP position (jumper across the top and center pins). All other devices that are not at the ends of the network must be unterminated. Verify that all devices that are not on the end of the network have all three jumpers set to the DOWN position (jumper across the center and bottom pins).

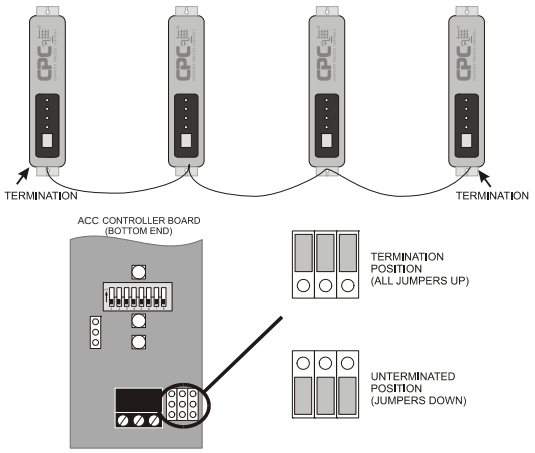

Figure 13 - Control Link ACC Network Termination

Step 6 - Connect a Dewpoint Sensor to Control Link ACC(s) on the Network

Once the Control Link ACCs are networked and properly terminated, the only step remaining to allow the Control Link ACCs to share a dewpoint sensor is to connect at least one dewpoint sensor to one Control Link ACC on the network. Any Control Link ACC on the network can be configured with the dewpoint sensor.

Each Control Link ACC first looks for a dewpoint sensor connected to itself. If a dewpoint sensor is directly connected to a Control Link ACC, it will use that sensor for its dewpoint value and broadcast the sensor's value on the MODBUS network. If no sensor is directly connected to a Control Link ACC, it will automatically look on the MODBUS network and use the sensor value broadcast by another Control Link ACC that has a sensor.

For fail-safe purposes, you may have multiple dewpoint sensors connected to different Control Link ACCs on the network. The Control Link ACCs automatically select a primary sensor to use, and will switch to another dewpoint sensor on the network if the primary sensor fails or is disconnected.

For dewpoint sensor wiring instructions, refer to ***Figure 8*** on ***page 5***.

©2008 Emerson Climate Technologies Retail Solutions, Inc. This document may be photocopied for personal use.
Visit our website at http://www.emersonretailsolutions.com/ for the latest technical documentation and updates.

Step 7 - Set the Setpoint Temperature Offset Jumper(s)

The Control Link ACC seeks to maintain a constant minimum difference between the dewpoint of the outside air and the temperature of the door frame. You may specify how big this difference will be by setting the temperature offset jumpers on the dewpoint sensor or the Control Link ACC board.

The offset jumper on the dewpoint sensor is located on the circuit board on the underside of the sensor enclosure (use needle-nose pliers to reach the jumper). The offset jumper on the Control Link ACC is located on the bottom end of the controller board near the dip switches (see ***Figure 14***).

The offset jumpers determine the number of degrees (in Celsius) that will be added to the value of the dewpoint sensor to determine the target temperature of the door frame. For example, if the current dewpoint is 5°C and the jumpers are set to a medium offset of 2°C, the Control Link ACC will control the heaters to achieve a door frame temperature of 7°C. As the dewpoint rises and falls, the door frame temperature setpoint will also rise and fall, so that the door frame temperature will always stay slightly above the current dewpoint.

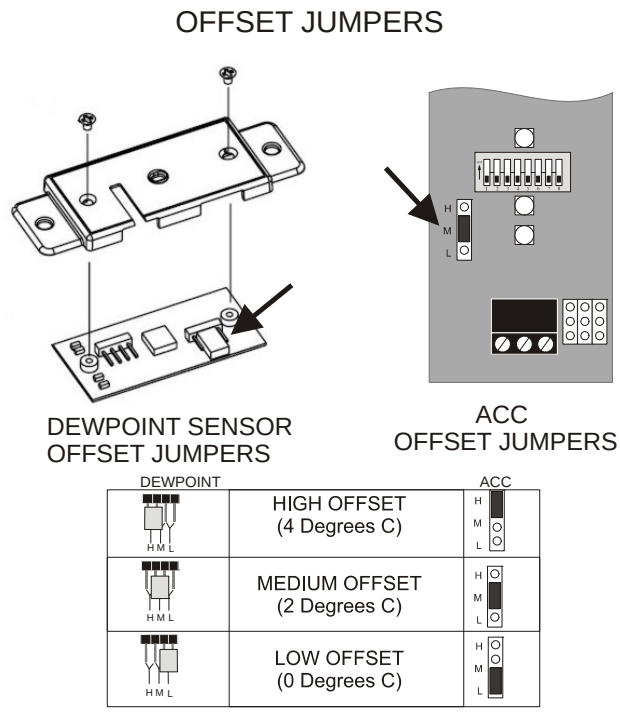

Figure 14 - Setpoint Jumper Location and Settings

The Control Link ACC uses jumpers on both the dewpoint sensor and the Control Link ACC board itself to determine the value of the temperature offset. The Control Link ACC prioritizes them in the following ways:

- The dewpoint sensor's temperature offset jumper takes priority over all Control Link ACCs. The setting of the dewpoint sensor's jumper is used by all Control Link ACCs on the network that are using that sensor for its dewpoint provider.
- If the dewpoint sensor's temperature offset jumper is removed, all Control Link ACCs will use the temperature offset specified by each Control Link ACC's own temperature offset jumper.

This priority structure is designed to make it easier for temperature offsets to be changed in the field (by

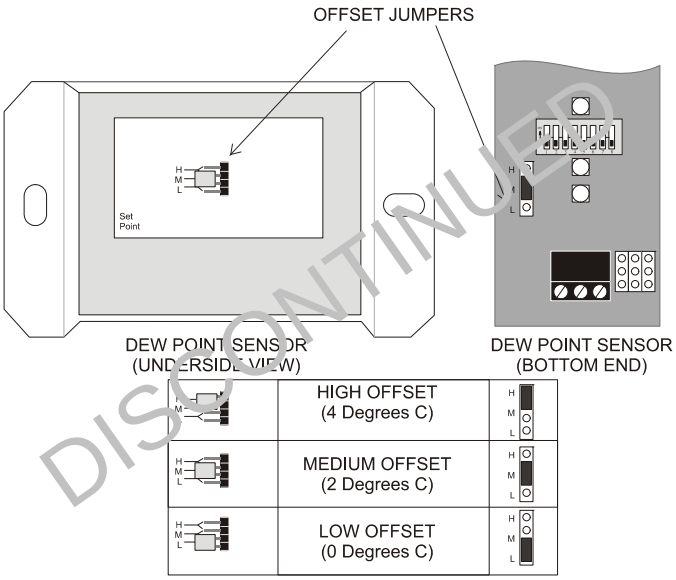

Figure 15 - Setpoint Jumper Location and Settings (Discontinued)

©2008 Emerson Climate Technologies Retail Solutions, Inc. This document may be photocopied for personal use.
Visit our website at http://www.emersonretailsolutions.com/ for the latest technical documentation and updates.

simply changing it on the dewpoint sensor), and it also allows multiple cases to use the same sensor while using different temperature offsets.

When setting up Control Link ACCs and temperature offset jumpers, choose either a HIGH offset (4 degrees C), a MEDIUM offset (2 degrees C) or a LOW offset (0 degrees C) and set each Control Link ACC and the dewpoint sensor to the required position for the chosen offset.

> ***TIP:*** *Experiment with offsets to find the lowest possible setting that still offers good performance. In many cases, depending on the placement of the door frame temperature sensor, a LOW offset will still provide good anti-condensate performance. The lower the offset being used, the higher the energy savings.*

Step 8 - Replace the Control Link ACC Enclosure Covers and Restore Power

Network configuration is complete. Replace the enclosure cover by pressing it against the enclosure until it snaps into place. Restore power to the Control Link ACC. Check the status of the network by observing the LEDs on the front of each Control Link ACC enclosure:

- If network communication is active, you should see the Rx LEDs blinking about once every 15 seconds. If you see no activity or a regular blinking pattern, there may be a problem with the MODBUS network wiring or configuration.
- For Control Link ACCs equipped with dewpoint sensors, you should see the Tx LED blink to indicate transmission. If not, there may be a problem with MODBUS or dewpoint sensor wiring.
- For Control Link ACCs that do not have dewpoint sensors directly connected to them, verify the STATUS LED is blinking once every 2 seconds to indicate status is OK. If this LED blinks in a repeating pattern of three short blinks, it means the Control Link ACC is not receiving a dewpoint sensor value broadcast over the network. There may be a problem with the MODBUS or dewpoint sensor wiring.

Operation

Control Link ACC Status LEDs

The Control Link ACC has four status LEDs that indicate what the controller is doing. They are: the Heater Status LED (HEAT), the General Status LED (Status) and the two Network Status LEDs (Tx and Rx).

Heater Status LED

The Heater Status LED (HEAT) glows red any time the door heaters are ON, and is OFF when the heaters are OFF.

Under normal operation, this LED should pulse ON and OFF when no door sweat is visible, indicating it is pulsing the heaters to maintain the necessary amount of heat to prevent door sweating (given the current dewpoint and case temperature). When a case door is opened, the LED will remain ON for longer periods of time (and may even remain ON without pulsing) to compensate for the change in case door temperature.

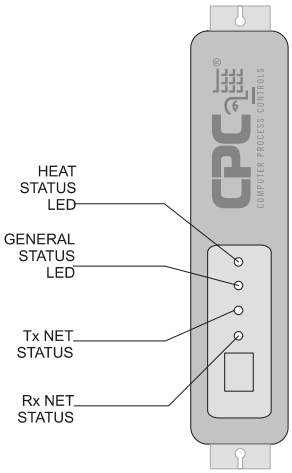

Figure 16 - LED Locations

Note that it is possible for this LED to remain OFF for long periods of time if the dewpoint is very low (e.g., during dry winter days).

©2008 Emerson Climate Technologies Retail Solutions, Inc. This document may be photocopied for personal use.
Visit our website at http://www.emersonretailsolutions.com/ for the latest technical documentation and updates.

General Status LED

The General Status LED (STATUS) blinks green to indicate the controller is powered up and functioning normally, and whether or not there are any alarm conditions.

If the controller is functioning normally, the STATUS LED will blink once every two seconds. If there is an error condition, it will blink at different rates to indicate the active error condition (see “Error Modes,” below).

Tx and RX Status LEDs

If the Control Link ACC is being networked with other Control Link ACCs via its MODBUS network connection, the Tx and Rx LEDs blink to indicate transmission and receipt of network messages. On a properly networked Control Link ACC, the Rx LED should blink about once every 15 seconds. If a Control Link ACC has a dewpoint sensor, you should also see the Tx LED blink. If these LEDs do not blink, there may be a problem with the MODBUS network connection.

Error Modes

The Control Link ACC has several error modes it will enter when failures occur. If any of the error modes below occur, the green STATUS LED will blink at a rate specific to the error condition. For each error mode, note the priority level — if more than one error mode is active, the LED blink rate will only show the error condition with the highest priority (priority #1 is the highest, and priority #5 is the lowest).

Priority 1: FAIL THERMAL SHUTDOWN

The Control Link ACC has an internal temperature sensor that will turn OFF the heater if the Triac driving the heater exceeds a temperature above 105°C. During thermal shutdown the STATUS LED will blink 5 times, pause, and repeat. Thermal shutdown will automatically clear itself when the Triac internal temperature falls below 102°C.

If a Control Link ACC experiences a large number of thermal shutdowns, there may be a problem with heat sinking on the Control Link ACC. Make sure the metal tab on the back of the Control Link ACC is mounted securely against the metal in the mullion for proper heat conduction.

Priority 2: TEMP SENSOR FAILURE

This error occurs when the Control Link ACC is not receiving a valid temperature value from the door temperature sensor. When this condition occurs, the Control Link ACC will revert to an open loop control method commonly used in E2 & PMAC. While operating in this mode, the Control Link ACC will be controlled according to the dewpoint within the store.

Dewpoint	Output
65°F (18°C)	100%
55°F (12.8°C)	75%
45°F (7.2°C)	50%
35°F (1.7°C)	25%
25°F (-3.9°C)	0%

©2008 Emerson Climate Technologies Retail Solutions, Inc. This document may be photocopied for personal use.
Visit our website at http://www.emersonretailsolutions.com/ for the latest technical documentation and updates.

The “Full ON” and “Full OFF” values (65°F and 25°F respectively) can be adjusted via HHT connected through a CPC gateway or MODBUS system.

When the temp sensor has failed, the STATUS LED will blink twice, pause, and repeat.

NOTE: It is possible to select the PMAC-style mode of operation without the Control Link ACC generating an alarm. PMAC mode may only be enabled using a HHT connected through a CPC gateway.

Priority 3: DEWPOINT SENSOR FAILURE

This error occurs when the Control Link ACC is not receiving a dewpoint sensor value (either from a dewpoint sensor directly connected to the Control Link ACC or from another sensor on the network). The Control Link ACC will continue controlling the heater with a fallback door temperature setpoint of 59°F (15°C) until the dew-point sensor connection is restored.

When the dewpoint sensor has failed and/or the Control Link ACC cannot find a dewpoint sensor value on the network, the STATUS LED will blink three times, pause, and repeat.

Priority 4: FLASH/CLOCK FAILURE

A firmware or hardware error has occurred, and the Control Link ACC is unable to function. A controller in this error state will require replacement. The STATUS LED will give one short blink, one long blink, pause, and repeat the pattern.

Priority 5: USER CONFIG LOST

The user configuration is bad. All set point changes have been reset to the original factory defaults. The STATUS LED will give one long blink, one short blink, pause, and repeat the pattern.

Specifications

Ambient	-40°C to +65°C
Humidity	5% to 95% non-condensing
Door Sensor	+/- 0.4°C of 0 to 80°C; up to +/- 0.6°C at -40°C and 120°C
Dewpoint Sensor	+/- 1°C over RH of 40 to 95% RH +/- 4°C over RH of 10 to 40% RH
Input Voltage	102 to 265 VAC
UL Recognized	File E110725

Table 1 - Control Link ACC Specifications

©2008 Emerson Climate Technologies Retail Solutions, Inc. This document may be photocopied for personal use.
Visit our website at http://www.emersonretailsolutions.com/ for the latest technical documentation and updates.