UNITED STATES DISTRICT COURT
EASTERN DISTRICT OF TEXAS
MARSHALL DIVISION

ICASHE, INC., Plaintiff, v. SAMSUNG ELECTRONICS CO., LTD., *et al*. Defendants.	Civil Action No. 2:24-cv-00429-JRG **JURY TRIAL DEMANDED**

PLAINTIFF ICASHE, INC.'S DISCLOSURE OF ASSERTED CLAIMS AND INFRINGEMENT CONTENTIONS

Pursuant to Patent Rules 3-1 and 3-2 and the Court's Order dated August 8, 2024 (Dkt. 14), Plaintiff iCashe, Inc. ("iCashe") hereby provides its Disclosure of Asserted Claims and Infringement Contentions ("Infringement Contentions") against Defendants Samsung Electronics Co., Ltd. and Samsung Electronics America, Inc. (collectively, "Samsung" or "Defendants") and identifies the documents included in its document production made herewith.

iCashe reserves the right to amend or supplement these Infringement Contentions pursuant to Patent Rule 3-6(a) in view of any claim construction ruling(s) issued by the Court. iCashe further reserves the right to seek leave pursuant to Patent Rule 3-6(b) to supplement and/or amend these Infringement Contentions, including identification of asserted claims, accused instrumentalities, and additional infringing structures within

Petitioners' Ex. 1014
Samsung v. iCashe
IPR2025-00640
Page 00001

already accused instrumentalities, based upon information obtained through discovery and/or other means.

iCashe is providing these Infringement Contentions before it has had any discovery from Samsung. Detailed information regarding Samsung's smartphones, wearable devices, and tablet computers and aspects of their NFC and/or MST functionality is not publicly available. iCashe expects to obtain more detailed information through discovery.

iCashe's Infringement Contentions do not constitute a disclosure of any information that is subject to attorney-client privilege or work-product protection or that is otherwise immune from discovery.

I. Identification of Infringed Claims (P.R. 3-1(a))

iCashe asserts seven patents: U.S. Patent Nos. 9,122,965 ("'965 patent"); 9,483,722 ("'722 patent"); 11,694,053 ("'053 patent"); 8,403,219 ("'219 patent"); 9,202,156 ("'156 patent"); 9,208,423 ("'423 patent"); and 11,270,174 ("'174 patent") (collectively, the "Asserted Patents"). Based on information presently available, iCashe identifies in the table below each claim of each patent-in-suit that Samsung has infringed and/or continues to infringe.

Patent	Infringed Claims
'965 patent	1-20
'722 patent	1-14
'053 patent	1-8, 17-20
'219 patent	1-6
'156 patent	1-5, 8-12
'423 patent	1-5, 8-18
'174 patent	1-9

II. Identification of Accused Instrumentalities (P.R. 3-1(b))

iCashe contends that Samsung has infringed, and/or continues to infringe, the Asserted Patents by making, using, offering for sale, selling, and/or importing into the United States, Samsung smartphones, wearable devices, and tablet computers that provide for contactless payment and/or other contactless "tap to" transactions using near field communication (NFC) and/or magnetic secure transmission (MST) functionality. Based on information presently available, iCashe identifies in the table below, the Accused Instrumentalities.

Patent	Accused Instrumentalities	Infringed Claims
'965 patent	Samsung smartphones that include an NFC controller, such as the NXP SN110U, another NXP NFC controller, a Samsung NFC controller, a Broadcom NFC controller, an STMicroelectronics NFC controller, or any other NFC controller capable of supporting "tap to" transactions, as applicable with respect to the charted claims.	1-20
	Samsung wearable devices and tablet computers that include an NFC controller, such as the NXP SN110U, another NXP NFC controller, a Samsung NFC controller, a Broadcom NFC controller, an STMicroelectronics NFC controller, or any other NFC controller capable of supporting "tap to" transactions, as applicable with respect to the charted claims.	1-5, 7-11, 13-19
'722 patent	Samsung smartphones that include an NFC controller, such as the NXP SN110U, another NXP NFC controller, a Samsung NFC controller, a Broadcom NFC controller, an STMicroelectronics NFC controller, or any other NFC controller capable of supporting "tap to" transactions, as applicable with respect to the charted claims.	1-14
	Samsung wearable devices and tablet computers that include an NFC controller, such as the NXP SN110U, another NXP NFC controller, a Samsung NFC controller, a Broadcom NFC controller, an	1-3, 5-9, 11-13

Patent	Accused Instrumentalities	Infringed Claims
	STMicroelectronics NFC controller, or any other NFC controller capable of supporting "tap to" transactions, as applicable with respect to the charted claims.	
'053 patent	Samsung smartphones, wearable devices, and tablet computers that include an NFC controller, such as the NXP SN110U, another NXP NFC controller, a Samsung NFC controller, a Broadcom NFC controller, an STMicroelectronics NFC controller, or any other NFC controller capable of supporting "tap to" transactions, as applicable with respect to the charted claims, and the methods used to manufacture and/or test those products.	1-8, 17-20
'219 patent	Samsung smartphones that include an NFC controller, such as the NXP SN110U, another NXP NFC controller, a Samsung NFC controller, a Broadcom NFC controller, an STMicroelectronics NFC controller, or any other NFC controller capable of supporting "tap to" transactions, as applicable with respect to the charted claims.	1-6
'156 patent	Samsung smartphones that include an MST controller, such as the Samsung S2MIS01A MST Driver chip, another Samsung MST controller, a Zinitix MST controller, an Exar MST controller, an STMicroelectronics MST controller, or any other MST controller capable of supporting "tap to" transactions, as applicable with respect to the charted claims.	1-5, 8-12
'423 patent	Samsung smartphones that include an MST controller, such as the Samsung S2MIS01A MST Driver chip, another Samsung MST controller, a Zinitix MST controller, an Exar MST controller, an STMicroelectronics MST controller, or any other MST controller capable of supporting "tap to" transactions, as applicable with respect to the charted claims.	1-5, 8-18
'174 patent	Samsung smartphones that include an NFC controller, such as the NXP SN110U, another NXP NFC controller, a Samsung NFC controller, a Broadcom NFC controller, an STMicroelectronics NFC controller, or any other NFC controller capable	1-4, 6-9

Patent	Accused Instrumentalities	Infringed Claims
	of supporting "tap to" transactions, as applicable with respect to the charted claims.	
	Samsung smartphones that include an MST controller, such as the Samsung S2MIS01A MST Driver chip, another Samsung MST controller, a Zinitix MST controller, an Exar MST controller, an STMicroelectronics MST controller, or any other MST controller capable of supporting "tap to" transactions, as applicable with respect to the charted claims.	1-2, 4-5, 7-9

Attached hereto as Exhibit A is a list of accused products, including model numbers, that iCashe has been able to identify based on presently available information. iCashe may identify additional devices, and may accuse additional model numbers, as it obtains discovery. Additionally, Exhibit A includes, for each device identified, an indication of whether the device provides contactless payment and/or other contactless "tap to" transactions using NFC and/or MST functionality, to the extent such information could be determined from publicly available sources.[1] iCashe is without sufficient information at this time to identify the specific NFC and/or MST chip manufacturer or model number contained within each device.

The following Samsung website page was used to identify the accused products in Exhibit A that include MST functionality: https://www.samsung.com/my/samsung-pay/supported-devices/?srsltid=AfmBOor09aM0X0486788EnkJAA8iWp31nTqw

[1] In the NFC and MST columns of Exhibit A, "Y" indicates that, on information and belief, the indicated functionality is present in the accused product, and "-" indicates that, on information and belief, the indicated functionality is not present in the accused product or that iCashe is without sufficient information at this time to identify whether the indicated functionality is present in the accused product.

V2I2Kc30O-0IIGgOd9iM. The page appears to be affiliated with a Samsung Malaysia-based website and thus may not accurately reflect accused products with MST functionality that were made, used, sold, offered for sale, or imported into the United States. However, public sources identifying MST functionality of the accused products is limited. iCashe reserves the right to amend its identification of NFC and/or MST functionality of the accused products identified in Exhibit A, and any additionally identified accused products, based on information obtained in discovery.

iCashe's infringement charts, attached hereto, correlate the asserted claims to the Accused Instrumentalities. iCashe expects to identify during discovery additional infringing devices, including devices for which limited information is available, newly released devices, and devices Samsung no longer sells (for which limited information is available), that fall within the scope of iCashe's infringement contentions.

III. Charts Identifying Each Element of Each Asserted Claim within Accused Instrumentalities (P.R. 3-1(c))

iCashe contends that Samsung has infringed and continues to infringe the Asserted Patents, directly and indirectly, by: (1) making, using, offering to sell, selling, and/or importing into the United States display panels and/or modules that practice the claims of the Asserted Patents (35 U.S.C. § 271(a)); and (2) inducing third parties (*e.g.*, Samsung customers and end users) to directly infringe by making, using, offering to sell, selling, and/or importing into the United States Samsung smartphones, wearable devices, and/or tablet computers that practice the claims of the Asserted Patents, with knowledge of the

Asserted Patents and of the third parties' direct infringement and specific intent to cause that direct infringement (35 U.S.C. § 271(b)). (*See* Dkt. 1 at ¶¶ 3, 31-44.)

Attached as Exhibits B through H-2, and as set forth below, iCashe provides charts identifying specifically where each element of each asserted claim is found within the Accused Instrumentalities.

Patent	**Claim Chart(s)**
'965 patent	Exhibit B
'722 patent	Exhibit C
'053 patent	Exhibit D
'219 patent	Exhibit E
'156 patent	Exhibit F
'423 patent	Exhibit G
'174 patent	Exhibit H-1
	Exhibit H-2

iCashe contends that the charted products provide representative infringement reads applicable to the broader set of Accused Instrumentalities, including substantially similar products that iCashe may identify during discovery. iCashe reserves the right to provide additional support, based on information obtained during discovery, for its contention that the charted products are representative, or to chart additional products as additional information becomes available.

iCashe does not contend that any element of any asserted claim is governed by 35 U.S.C. § 112(6).

IV. Literal Infringement and Infringement under the Doctrine of Equivalents (P.R. 3-1(d))

iCashe contends that each element of each asserted claim is literally present in each Accused Instrumentality. iCashe reserves the right to assert, in the alternative, that

certain elements of certain asserted claims are present in the Accused Instrumentalities under the doctrine of equivalents in light of information obtained during discovery and/or in view of any claim construction ruling(s) issued by the Court.

V. Priority Dates of the Asserted Patents (P.R. 3-1(e))

iCashe asserts that all asserted claims of U.S. Patent Nos. 9,122,965, 9,483,722, and 11,694,053 claim priority to U.S. Application 12/188,346 and are thus entitled to a priority date of August 8, 2008, the filing date of that application.

iCashe asserts that all asserted claims of U.S. Patent Nos. 8,403,219, 9,202,156, 9,208,423, and 11,270,174 claim priority to U.S. Application 11/063,291 and are thus entitled to a priority date of February 22, 2005, the filing date of that application.

VI. Disclosure Regarding Practice of Claimed Inventions (P.R. 3-1(f))

iCashe does not contend that any iCashe apparatus, device, process, method, act, or other instrumentality practices any of the asserted claims. Some apparatuses, devices, processes, methods, acts, or other instrumentalities provided by third party Tyfone, Inc., including SideTap and/or iCashe Mobile Wallet, may have practiced some of the asserted claims.

VII. Document Production Accompanying Disclosure (P.R. 3-2)

In accordance with Patent Rule 3-2, iCashe produces the following categories of documents in the following production ranges.

Patent Rule 3-2(a): iCashe is not presently aware of any documents evidencing a discussion, disclosure to, or other manner of providing to a third party, or sale of or offer to sell, the claimed invention(s) prior to the dates of application for the patents in suit.

Patent Rule 3-2(b): ICASHE_00010725 – ICASHE_00010784

Patent Rule 3-2(c):

Patent	File History Production Range
’219 patent	ICASHE_00000247 – ICASHE_00000372
’965 patent	ICASHE_00000373 – ICASHE_00002163
’156 patent	ICASHE_00002164 – ICASHE_00003833
’423 patent	ICASHE_00003834 – ICASHE_00005504
’722 patent	ICASHE_00005505 – ICASHE_00007498
’174 patent	ICASHE_00007499 – ICASHE_00010225
’053 patent	ICASHE_00010226 – ICASHE_00010724

Dated: September 4, 2024

Respectfully submitted,

By: /s/ Aaron R. Fahrenkrog_____

Aaron R. Fahrenkrog
MN Bar No. 0386673 (admitted in this District)
Email: afahrenkrog@robinskaplan.com
Logan J. Drew
MN Bar No. 0389449 (admitted in this District)
Email: ldrew@robinskaplan.com
Emily J. Tremblay
MN Bar No. 0395003 (*pro hac vice*)
Email: etremblay@robinskaplan.com
Jessica L. Gutierrez
MN Bar No. 0396359 (*pro hac vice*)
Email: jgutierrez@robinskaplan.com
William R. Jones
MN Bar No. 0402360 (*pro hac vice*)
Email: wjones@robinskaplan.com
ROBINS KAPLAN LLP
2800 LaSalle Plaza
800 LaSalle Avenue
Minneapolis, MN 55402
Telephone: 612-349-8500
Facsimile: 612-339-4181

Of Counsel:
Andrea L. Fair
Texas State Bar No. 24078488
E-mail: andrea@wsfirm.com
WARD, SMITH & HILL, PLLC
1507 Bill Owens Parkway
Longview, TX 75604
(903) 757-6400 (telephone)
(903) 757-2323 (facsimile)

Attorneys for Plaintiff iCashe, Inc.

CERTIFICATE OF SERVICE

I hereby certify that a copy of the foregoing document was served on September 4, 2024 on all counsel of record for Defendants via electronic mail using the following contact information:

Melissa Richards Smith
Gillam & Smith, LLP
303 South Washington Avenue
Marshall, TX 75670
903-934-8450
903-934-9257 (fax)
melissa@gillamsmithlaw.com

/s/ Aaron R. Fahrenkrog
Aaron R. Fahrenkrog

EXHIBIT C

Exhibit C
iCashe's Infringement Contentions for U.S. Patent No. 9,483,722
Samsung Galaxy S21 5G Smartphone

The chart below identifies where each element of the asserted claims of U.S. Patent No. 9,483,722 ("'722 patent") is found in the exemplary Samsung Galaxy S21 5G smartphone. iCashe contends that all Samsung smartphones made, used, tested, offered for sale, sold, or imported into the United States by Samsung, that share the features detailed below with reference to the Samsung Galaxy S21 5G smartphone, infringe claims 1-14 of the '722 patent in the manner charted herein. iCashe further contends that all Samsung wearable devices and tablet computers made, used, tested, offered for sale, sold or imported into the United States by Samsung, that share the features detailed below with reference to the Samsung Galaxy S21 5G smartphone, infringe at least claims 1-3, 5-9, and 11-13 of the '722 patent in the manner charted herein. Specifically, all Samsung smartphones, wearable devices, and tablet computers that include an NFC controller, such as the NXP SN110U, another NXP NFC controller, a Samsung NFC controller, a Broadcom NFC controller, an STMicroelectronics NFC controller, or any other NFC controller capable of supporting "tap to" transactions, as applicable with respect to the charted claims, infringe as set forth below, including but not limited to the smartphones, wearable devices, and tablet computers listed in Exhibit A.

The Accused Products iCashe has been able to identify to date are listed in Exhibit A to iCashe's Disclosure of Asserted Claims and Infringement Contentions ("Infringement Contentions"). The Accused Products are not limited to the listed devices, and iCashe reserves the right to identify additional devices based on information obtained in discovery, including but not limited to devices released after service of iCashe's Infringement Contentions.

Exhibit C
iCashe's Infringement Contentions for U.S. Patent No. 9,483,722
Samsung Galaxy S21 5G Smartphone

Claim Language	Infringement Evidence
1. A mobile device comprising:	The Samsung Galaxy S21 5G smartphone is a mobile device. https://www.samsung.com/us/smartphones/galaxy-s-series/certified-re-newed-store/buy/?modelCode=SM5G991UZAAXAA.

Exhibit C
iCashe's Infringement Contentions for U.S. Patent No. 9,483,722
Samsung Galaxy S21 5G Smartphone

Claim Language	Infringement Evidence
	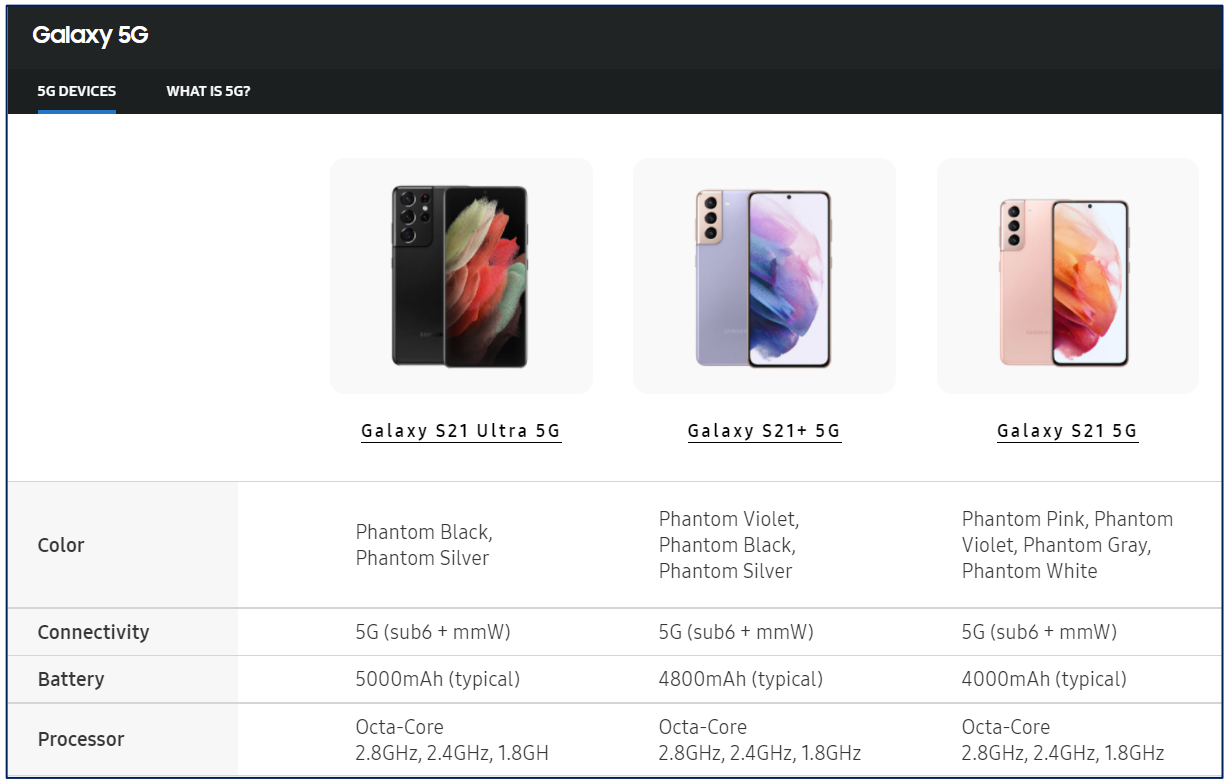 Galaxy 5G 5G DEVICES WHAT IS 5G? Galaxy S21 Ultra 5G / Galaxy S21+ 5G / Galaxy S21 5G Color: Phantom Black, Phantom Silver / Phantom Violet, Phantom Black, Phantom Silver / Phantom Pink, Phantom Violet, Phantom Gray, Phantom White Connectivity: 5G (sub6 + mmW) / 5G (sub6 + mmW) / 5G (sub6 + mmW) Battery: 5000mAh (typical) / 4800mAh (typical) / 4000mAh (typical) Processor: Octa-Core 2.8GHz, 2.4GHz, 1.8GH / Octa-Core 2.8GHz, 2.4GHz, 1.8GHz / Octa-Core 2.8GHz, 2.4GHz, 1.8GHz https://web.archive.org/web/20211111133651/https:/www.samsung.com/us/mobile/5g/.
[1.a] a smartcard controller that includes load modulation circuitry for half duplex communication by creating at least one frequency sideband	The Galaxy S21 contains a smartcard controller that includes load modulation circuitry for half duplex communication by creating at least one frequency sideband about a carrier frequency of an interrogating radio frequency (RF) field.

Exhibit C
iCashe's Infringement Contentions for U.S. Patent No. 9,483,722
Samsung Galaxy S21 5G Smartphone

Claim Language	Infringement Evidence
about a carrier frequency of an interrogating radio frequency (RF) field;	The Galaxy S21 includes an NXP SN110U V3 NFC and Secure Element chip ("SN110U"), which contains a smartcard controller. Date: November 4, 2020 Harry Lee SAMSUNG ELECTRONICS Co., Ltd 129 Samsung-ro Yeongtong-gu Gyeonggi-do Suwon-si 16677 KOREA, REPUBLIC OF ***Re:*** ***EMVCo Letter of Approval – EMV Contactless Level 1 Mobile Product*** **Approval Number:** **MTA_LOA_SAEL_02859** **Approval Date:** **November 4, 2020** **EMVCo Website Publication Date:** **January 15, 2021** **Approval Expiration Date:** **November 2, 2023** Product Provider Name: SAMSUNG ELECTRONICS Co., Ltd Registration Number: SAEL.V 14 0068 Commercial Name: Galaxy S21 5G Product Name: SM-G991B/DS Product Version: V1

Exhibit C
iCashe's Infringement Contentions for U.S. Patent No. 9,483,722
Samsung Galaxy S21 5G Smartphone

Claim Language	Infringement Evidence
	Contactless Communication Protocol: ☒ Type A ☒ Type B Execution Environment: ☒ UICC[2] slot 1 ☐ UICC[2] slot 2 ☐ eSE ☒ HCE ☐ eUICC Mobile Product Operating System Name and Version: Android Version 11.0 NFC Controller Name and Version: SN110U V3 Version N/A NFC Controller Firmware Name and Version: N/A Version FW01.10.5A https://www.emvco.com/wp-content/uploads/loa/MTA_LOA_SAEL_02859_24Nov20_SHORT.pdf (emphasis added).

Exhibit C
iCashe's Infringement Contentions for U.S. Patent No. 9,483,722
Samsung Galaxy S21 5G Smartphone

Claim Language	Infringement Evidence
	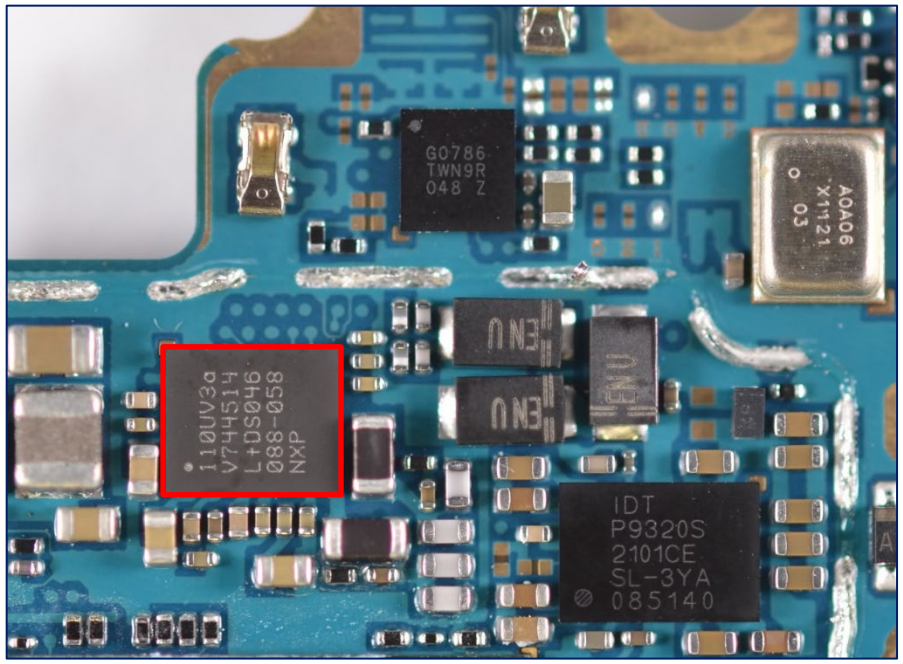 Teardown image from Samsung Galaxy S21 5G smartphone (emphasis added). This SN110U chip provides near-field communications functionality, enabling NFC payment transactions, as discussed in further detail below.

Exhibit C
iCashe's Infringement Contentions for U.S. Patent No. 9,483,722
Samsung Galaxy S21 5G Smartphone

Claim Language	Infringement Evidence
	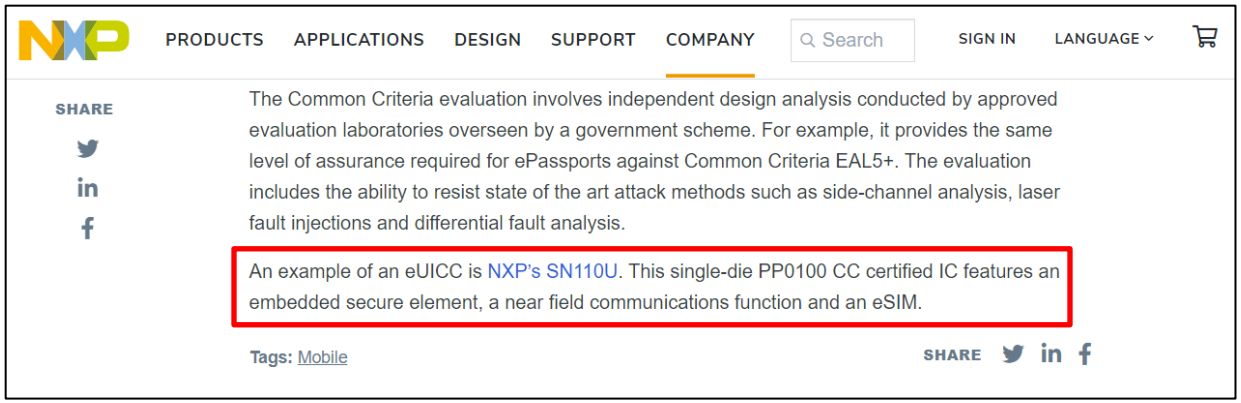 PRODUCTS APPLICATIONS DESIGN SUPPORT COMPANY Search SIGN IN LANGUAGE SHARE The Common Criteria evaluation involves independent design analysis conducted by approved evaluation laboratories overseen by a government scheme. For example, it provides the same level of assurance required for ePassports against Common Criteria EAL5+. The evaluation includes the ability to resist state of the art attack methods such as side-channel analysis, laser fault injections and differential fault analysis. An example of an eUICC is NXP's SN110U. This single-die PP0100 CC certified IC features an embedded secure element, a near field communications function and an eSIM. Tags: Mobile SHARE https://www.nxp.com/company/blog/imagine-never-having-to-change-a-sim-again:BL-NEVER-CHANGE-SIM-AGAIN (emphasis added).

Claim Language	Infringement Evidence
	 Near Field Communication™ CERTIFIED SN110x Android Reference Platform *This is to certify that* NXP Semiconductors has successfully achieved certification in the NFC Forum Certification Program indicating that their product has demonstrated its conformance to the Applicable Certification Requirements listed below. **Certification Requirements:** Certification Release 11 Test Release 11.1 **Device Class:** NFC Universal Device Card emulation: T3T, T4AT, T4BT **Date certified:** 2019-10-23 **Certification ID:** 58603 TM: The NFC Certification Mark is a worldwide trademark or registered trademark of the NFC Forum. The NFC Certification Mark may be used only in relation to products that have been certified under this program and only after the company has entered into the license agreement with the NFC Forum. The register of NFC Forum Certified products may be viewed at http://nfc-forum.org/our-work/compliance/certification-program/certification-register/ The NFC Forum Certification Program is operated by the NFC Forum. NFC Forum Certification NXP SN110x. The NFC functionality of the SN110U chip in the Galaxy S21 can be used for, e.g., completing Samsung Pay transactions.

Claim Language	Infringement Evidence
	Use Samsung Pay Use Samsung Pay by opening the app and holding your device over the store's card reader. 1. From Samsung Pay, select a card to pay with and authorize payments by scanning your finger or by entering your Samsung Pay PIN. 2. Hold your phone over the store's card reader. • When your payment is complete, a receipt is sent to your registered email. NOTE Make sure the NFC feature is enabled on your device. For more information, see NFC and payment. *Samsung Galaxy S21 5G, Galaxy S21+ 5G, Galaxy S21 Ultra 5G User Manual* (2021) ("*Galaxy S21 User Manual*") at 106-07.

Claim Language	Infringement Evidence
	NFC and payment Near Field Communication (NFC) allows you to communicate with another device without connecting to a network. This technology is used by Android Beam and certain payment apps. The device that you are transferring to needs to support NFC, and it needs to be within four centimeters of your device. ◌ From Settings, tap **Connections** > **NFC and contactless payments**, and then tap to turn on this feature. **Tap and pay** Use an NFC payment app to make payments by touching your device to a compatible credit card reader. 1. From Settings, tap **Connections** > **NFC and contactless payments**, and then tap to turn on NFC. 2. Tap **Contactless payments** to see the default payment app. • To use another payment app, tap an available app to choose it. • To use a payment app that is open, tap **Pay with currently open app**. • To set another payment service as the default, tap **Others**, and then tap the service you prefer. TIP NFC technology is used with **Samsung Pay**. Turn on this feature to see how easy and secure it is to use your device to make payments. *Galaxy S21 User Manual* at 118.

Claim Language	Infringement Evidence
	Fast, secure payments with Samsung Pay Samsung Pay allows you to tap to pay with your device anywhere NFC is available, making in-store payments quick and secure[1]. You can also use Samsung Pay for in-app and online purchases at participating merchants, including Samsung.com. https://www.samsung.com/us/apps/samsung-wallet/. **What differentiates Samsung Pay from Apple Pay or Android Pay?** Both Apple Pay and Google Pay rely on Near Field Communication (NFC) technology to make contactless payment. These services are limited to merchants with NFC-enabled payment terminals. Merchants are required to upgrade to a new payment terminal with NFC capabilities in order to accept Apple Pay or Android Pay. Samsung Pay, on the other hand, uses both NFC and Magnetic Secure Transmission (MST) technology on supported devices, making it work with nearly all current payment terminals. Some payment terminals may require software updates. https://www.samsung.com/us/support/answer/ANS00080583/. Although NXP has not published certain information regarding the functionality or functional blocks of the SN110U chip, it has published block diagrams showing the components of SN1xx

Claim Language	Infringement Evidence
	family devices, including the embedded NFC controller, the embedded secure element, and the system mailbox, as shown below.

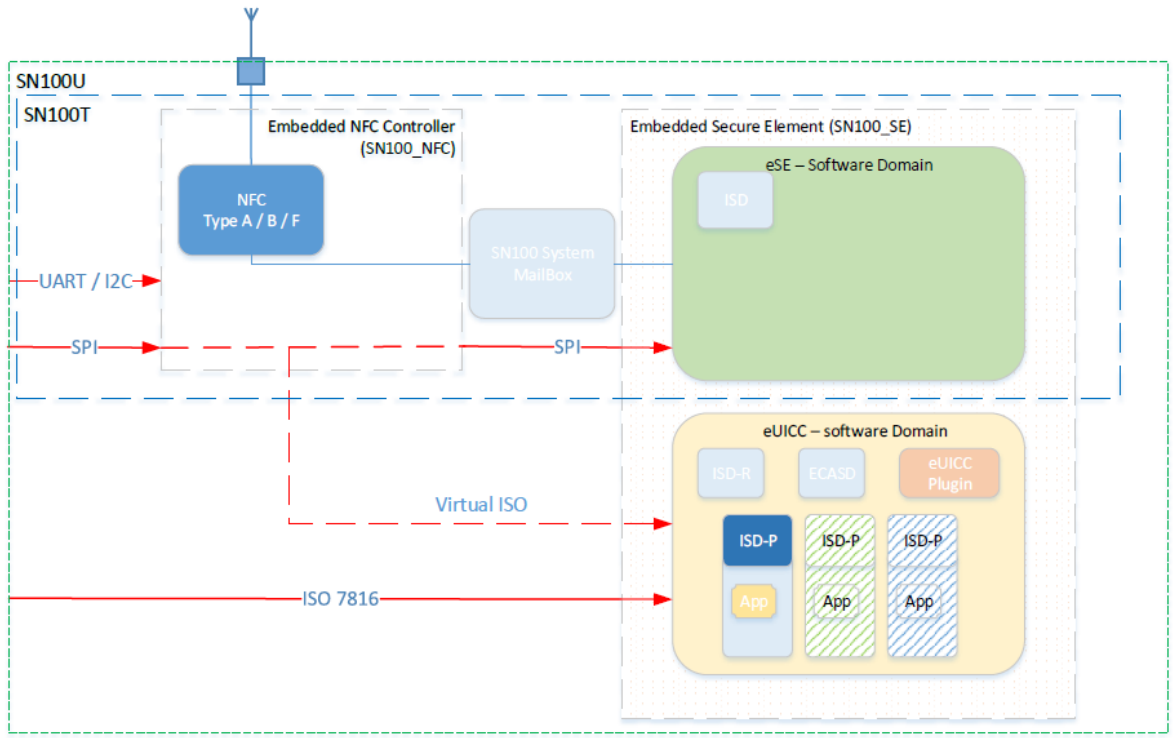

Fig. 1.2: SN100x Product Configurations

NXP SN100T – JCOP5.1 on SN100.C48 Secure Element Security Target Lite, Rev. 1.0 (Apr. 18, 2019) ("*NXP SN100T Secure Element Specification*") at 5.

Claim Language	Infringement Evidence
	Portions of the embedded secure element of the SN110U form all or part of the smartcard controller within the Galaxy S21. Additionally, portions of the embedded NFC controller of the SN110U may form part of the smartcard controller within the Galaxy S21. Although certain information regarding the functionality or functional blocks of the SN1xx family devices is not publicly available, NXP has published detailed information about the functionality and functional blocks of other NXP NFC chips, including the PN7150. The functionality of the PN7150 is described in the publicly available *PN7150 High Performance NFC Controller with Integrated Firmware, Supporting All NFC Forum Modes, Product Data Sheet, Rev. 4.1* (Jan. 27, 2023) ("*PN7150 Data Sheet*"). Additionally, a publicly available Antenna Design and Matching Guide published in 2019 describes functionality of the PN7150 in connection with Active Load Modulation (ALM) communication. *Application Note AN11755, PN7150 Antenna Design and Matching Guide, Rev. 1.7* (July 10, 2019) ("*PN7150 Antenna Design and Matching Guide*"). On information and belief and as detailed below, the NXP PN7150 chip—as described in the publications cited herein—contains certain functional blocks and interfaces that are similar to some of the relevant functional blocks and interfaces of the NXP SN110U chip and surrounding circuitry in the Galaxy S21. As discussed below, each of the SN110U and the PN7150 NFC controllers operates at 13.56 MHz and supports Type A and Type B communications under the ISO/IEC 14443 standard. The SN110U supports RF communication at 13.56 MHz, as shown below, and the two standard sideband frequencies of $f_c/16$ based on the occupied bandwidth of 1.69 MHz (2 x 13.56/16).

Claim Language	Infringement Evidence
	HCT CO.,LTD. 74, Seoicheon-ro 578beon-gil, Majang-myeon, Icheon-si, Gyeonggi-do, 17383, Rep. of KOREA TEL: +82-31-645-6300 FAX: +82-31-645-6401 **FCC NFC REPORT** **Certification** **Applicant Name:** SAMSUNG Electronics Co., Ltd. **Address:** 129, Samsung-ro, Yeongtong-gu, Suwon-si, Gyeonggi-do, 16677, Rep. of Korea **Date of Issue:** October 29, 2020 **Test Site/Location:** 74, Seoicheon-ro 578beon-gil, Majang-myeon, Icheon-si, Gyeonggi-do, 17383 KOREA **Report No.:** HCT-RF-2010-FC011 **FCC ID:** A3LSMG991U **APPLICANT:** SAMSUNG Electronics Co., Ltd. **Model:** SM-G991U **Additional Model:** SM-G991U1 **EUT Type:** Mobile Phone **RF Output Field Strength:** 18.19 dBuV/m @30 m **Frequency of Operation:** 13.56 MHz **Modulation type:** ASK **FCC Classification:** Low Power Communication Device – Transmitter **FCC Rule Part(s):** FCC Part 15.225 Subpart C *FCC NFC Test Report for Samsung Galaxy S21 Smartphone* at 1 (emphasis added).

Claim Language	Infringement Evidence
	 FCC NFC Test Report for Samsung Galaxy S21 Smartphone at 23 (emphasis added). The *NXP SN100T Secure Element Specification* confirms that the embedded NFC controller of the SN110U supports Type A and Type B communications.

Claim Language	Infringement Evidence
	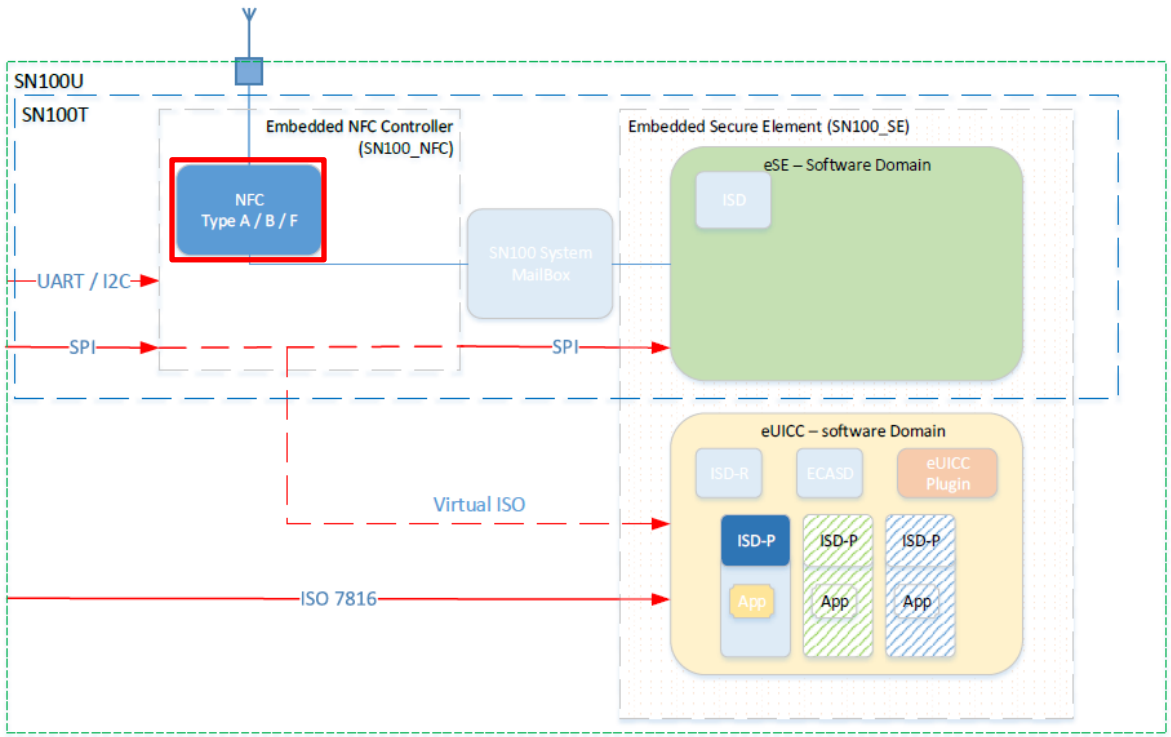 **Fig. 1.2:** SN100x Product Configurations *NXP SN100T Secure Element Specification* at 5 (emphasis added). The EMVCo certification of the Galaxy S21 as an EMV Contactless Level 1 Mobile Product indicates that the Galaxy S21 supports Type A and Type B communications under the ISO/IEC 14443 standard.

Claim Language	Infringement Evidence

Contactless Communication Protocol:	☒ Type A ☒ Type B
Execution Environment:	☒ UICC[2] slot 1 ☐ UICC[2] slot 2 ☐ eSE ☒ HCE ☐ eUICC
Mobile Product Operating System Name and Version:	Android Version 11.0
NFC Controller Name and Version:	SN110U V3 Version N/A
NFC Controller Firmware Name and Version:	N/A Version FW01.10.5A

https://www.emvco.com/wp-content/uploads/loa/MTA_LOA_SAEL_02859_24Nov20_SHORT.pdf (emphasis added).

Like the SN110U, the PN7150 is a highly integrated NFC transceiver IC for contactless communication at 13.56 MHz that supports various ISO/IEC 14443 modes.

> The PN7150 is a highly integrated NFC transceiver IC for contactless communication at 13.56MHz. This transceiver IC utilizes an outstanding modulation and demodulation concept completely integrated for different kinds of contactless communication methods and protocols at 13.56 MHz.

PN7150 Antenna Design and Matching Guide at 3.

Claim Language	Infringement Evidence
	Plug´n play and high-performance full NFC solution PN7150 is a full NFC controller solution with integrated firmware and NCI interface designed for contactless communication at 13.56 MHz. It is compatible with NFC forum requirements. PN7150 is designed based on learnings from previous NXP NFC device generation. It is the ideal solution for rapidly integrating NFC technology in any application, especially those running O/S environment like Linux and Android, reducing Bill of Material (BOM) size and cost, thanks to: • Full NFC forum compliancy (see [1]) with small form factor antenna • Embedded NFC firmware providing all NFC protocols as pre-integrated feature • Direct connection to the main host or microcontroller, by I^2C-bus physical and NCI protocol • Ultra-low power consumption in polling loop mode • Highly efficient integrated power management unit (PMU) allowing direct supply from a battery PN7150 embeds a new generation RF contactless front-end supporting various transmission modes according to NFCIP-1 and NFCIP-2, ISO/IEC 14443, ISO/IEC 15693, MIFARE Classic IC-based card and FeliCa card specifications. It embeds an Arm Cortex-M0 microcontroller core loaded with the integrated firmware supporting the NCI 1.0 host communication. It also allows to provide a higher output power by supplying the transmitter output stage from 3.0 V to 4.75 V. *PN7150 Data Sheet* at 2. Like the SN110U, the PN7150 is designed to be connected to an external coil antenna.

Claim Language	Infringement Evidence
	The PN7150 is intended to be connected to an external coil antenna through a specific matching/tuning network. The purpose of this document is first to provide some guidelines regarding the design of the NFC antenna to be connected to the PN7150. It then depicts a measurement method in order to evaluate the performances of the antenna prior to connecting it to the NXP NFC chip. The next chapter explains how to determine the matching network to be placed between a given antenna and the PN7150 (based on the antenna electrical equivalent circuit) Then, an RF performance validation procedure is proposed. Finally, an example of PN7150 antenna and tuning design is given as reference. *PN7150 Antenna Design and Matching Guide* at 3. Given the similarities and common functionalities across the SN110U and the PN7150, and in the absence of publicly available information regarding the SN110U, detailed technical information regarding the PN7150 is set forth below for illustrative purposes and relied upon herein to demonstrate relevant functionality of the SN110U and surrounding circuitry. NXP provides block diagrams for the PN7150. Certain functional blocks of the PN7150 are demonstrative of some functional blocks of the SN110U chip for the reasons discussed above. Notably, as shown in the block diagram below, the PN7150 contains smartcard circuitry, including at least a Contactless Interface Unit (CIU). The functionality found in the CIU is relevant for reasons discussed below.

Claim Language	Infringement Evidence
	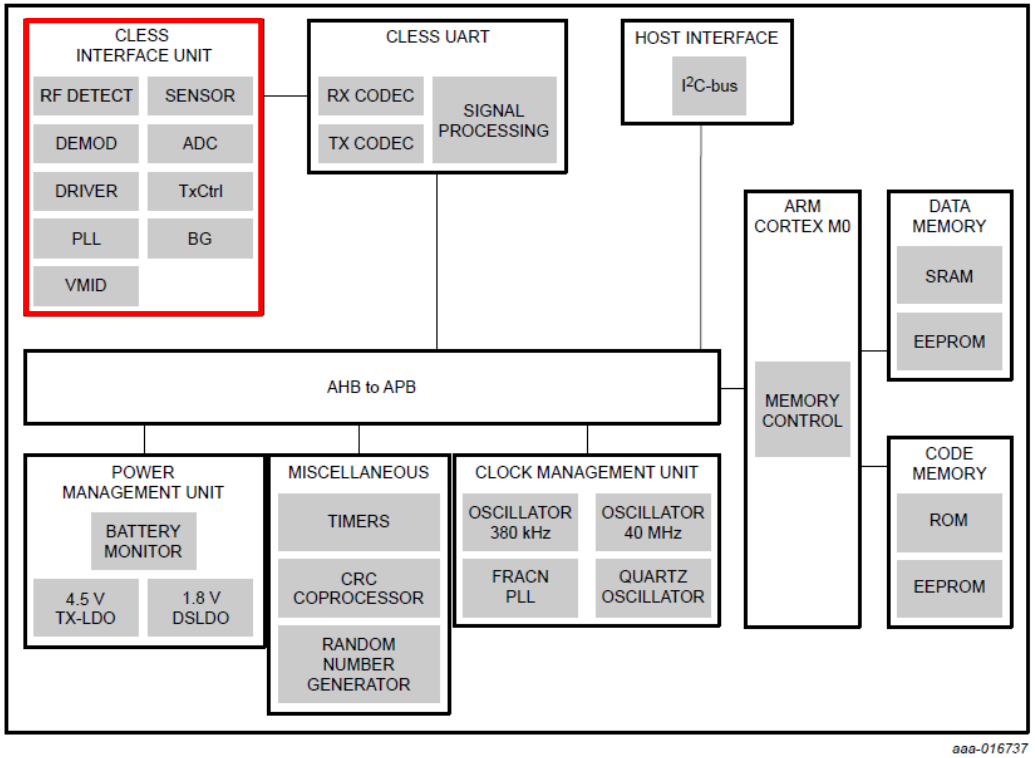 Fig 3. PN7150 block diagram *PN7150 Data Sheet* at 10 (emphasis added).

Claim Language	Infringement Evidence
	On information and belief, the SN110U chip contains circuitry and functional blocks within the embedded NFC controller that correspond to certain circuitry and functional blocks within the CIU of the PN7150. As evidenced by the Galaxy S21's NFC-based Samsung Pay functionality, for example, the smartcard circuitry includes (1) a functional block to amplify the signal received from the NFC reader via the Galaxy S21's antenna (discussed below with respect to limitation 1.c), and (2) a functional block (i.e., the load modulation circuitry) for actively transmitting modulated data to the NFC reader for conducting the transaction. Many NXP NFC chips, including the SN110U, contain load modulation circuitry for active load modulation. In a paper published in 2012, the authors explain the benefits of active load modulation in NFC chips for use in mobile phones. Gebhart, Michael, et al., *Active Load Modulation for Contactless Near-Field Communication*, IEEE 2012 International Conference on RFID-Technologies and Applications (RFID-TA). The authors describe a test in which an NXP NFC chip (PN547) was operated to communicate with an NFC reader using each of active load modulation (ALM) and passive load modulation (PLM). As shown below, with ALM, the PN547 was capable of communicating with the NFC reader at significantly greater distances. The test shows that passive load modulation limited the communication distance between the chip and reader to less than 3cm, while ALM allowed for greater distances between the chip and reader.

Claim Language	Infringement Evidence
	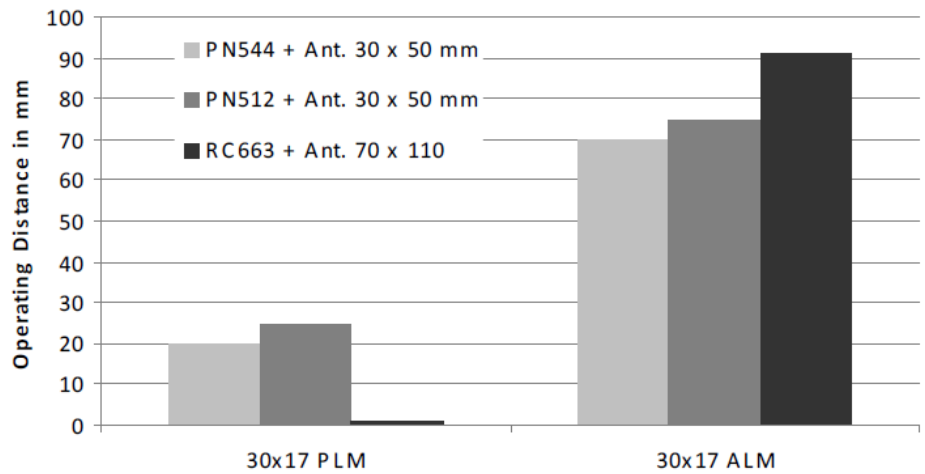 Fig. 10. Comparison of operating distance achieved with ALM and PLM. Gebhart, Michael, et al., *Active Load Modulation for Contactless Near-Field Communication*, IEEE 2012 International Conference on RFID-Technologies and Applications (RFID-TA) at 5. Due to the demonstrated benefit of *active* load modulation, many NXP NFC chips contain ALM circuitry and functionality. For example, as shown below with respect to the PN7150 chip, the NXP SN110U chip and surrounding circuitry was designed for ALM. As further discussed below, testing indicates that the Galaxy S21 utilizes this ALM functionality.

Claim Language	Infringement Evidence
	2.2 Single loop antenna dedicated for Active Load Modulation PN7150 was designed for Active Load Modulation (ALM) concept. ALM provides high performances and significant margins to NFC standard criteria. It also allows the use of smaller antenna. *PN7150 Antenna Design and Matching Guide* at 4.

Claim Language	Infringement Evidence
	ALM Mode (SINGLE): 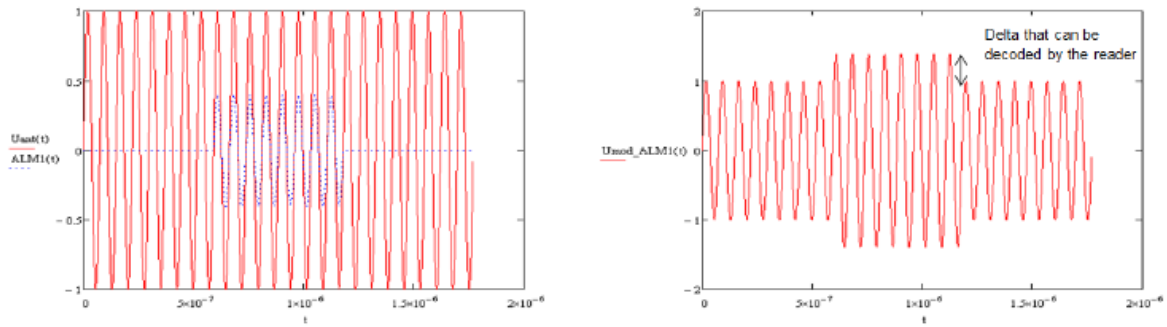 **Fig 2. ALM mode SINGLE concept** On the left graph the red 13.56MHz signal shows the voltage at the NFC antenna which is induced by the reader field, the blue curve shows the modulation pattern. This modulation pattern is generated by actively driving 13.56MHz with TX1 or TX2 while the other TX pin (TX2 or TX1) is kept silent. On the right we can see the modulated reader field. *PN7150 Antenna Design and Matching Guide* at 5.

Claim Language	Infringement Evidence
	ALM Mode (DUAL): 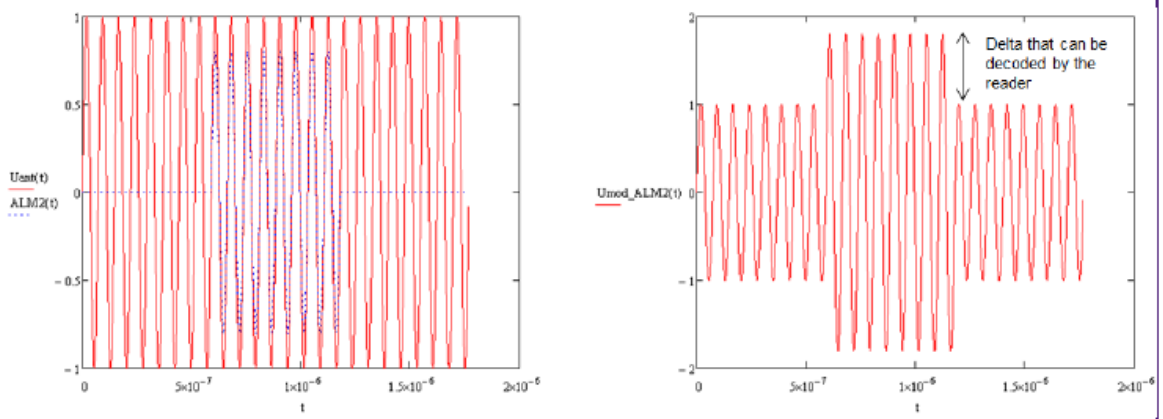 **Fig 3. ALM mode DUAL concept** In this mode the modulation pattern is generated by actively driving 13.56MHz with TX1 and TX2. The modulation depth observed is twice the modulation depth of mode 1. *PN7150 Antenna Design and Matching Guide* at 5. As shown below, the PN7150 circuitry produces a modulation signal that is driven to the antenna via TX1 and/or TX2.

Claim Language	Infringement Evidence
	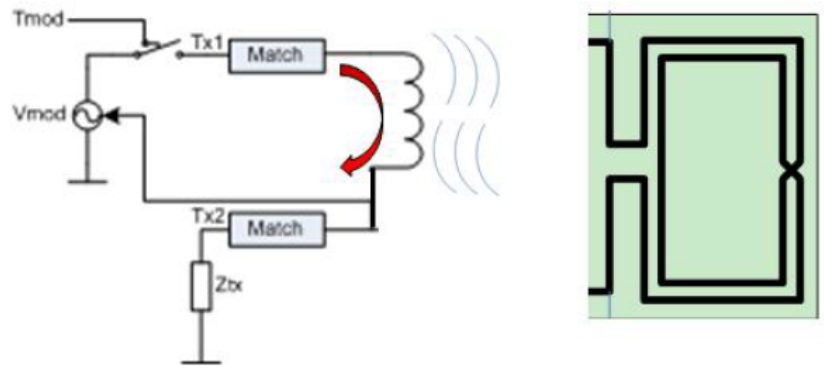 Fig 4. Single Loop Antenna concept (mode 1 illustration) *PN7150 Antenna Design and Matching Guide* at 6. 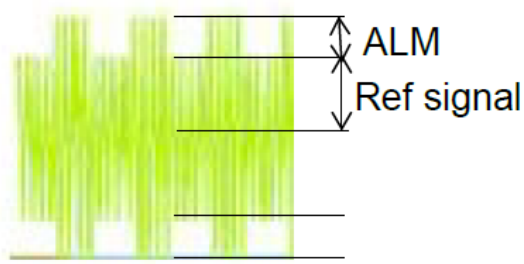 Fig 5. Load modulation illustration

Claim Language	Infringement Evidence
	PN7150 Antenna Design and Matching Guide at 6. The ALM produces upper and lower sidebands with respect to the 13.56 MHz signal, as required by the Type A and Type B communications under the ISO/IEC 14443 standard as will be described. On *Fig 6* below LMA result examples are shown for Upper Side Band and Lower Side Band in the 2 modes available for PN7150 (respectively mode 1, mode 2). In order to minimize the phase error, it is necessary to limit the level of the load modulation amplitude (LMA) and to adjust the balance of the Side Bands when the field strength is low. 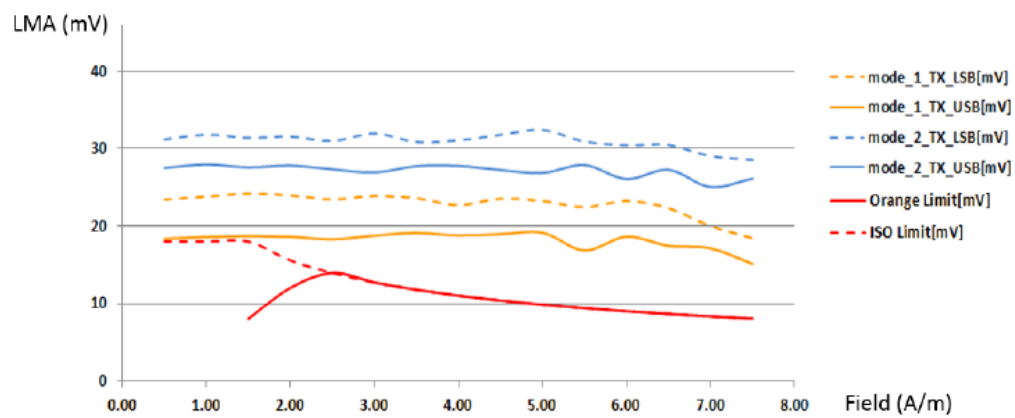 **Fig 6. Example Side Bands ISO results for modes 1, 2**

Claim Language	Infringement Evidence
	PN7150 Antenna Design and Matching Guide at 7. On information and belief, the SN110U chip contains functional blocks and circuitry within the embedded NFC controller that correspond to the active load modulation circuitry shown and described with respect to the PN7150. The EMVCo certification of the Galaxy S21 as an EMV Contactless Level 1 Mobile Product indicates that the Galaxy S21 has active load modulation circuitry compliant with the requirements of the EMV Level 1 Specifications for Payment Systems. The EMVCo Certification further indicates that the Galaxy S21 supports Type A and Type B communications under the ISO/IEC 14443 standard.

Re: ***EMVCo Letter of Approval – EMV Contactless Level 1 Mobile Product***

Approval Number:	**MTA_LOA_SAEL_02859**
Approval Date:	**November 4, 2020**
EMVCo Website Publication Date:	**January 15, 2021**
Approval Expiration Date:	**November 2, 2023**

Product Provider Name:	SAMSUNG ELECTRONICS Co., Ltd
Registration Number:	SAEL.V 14 0068
Commercial Name:	Galaxy S21 5G
Product Name:	SM-G991B/DS
Product Version:	V1
Type Allocation Code (TAC) or product identifier for testing sample:	35285930
Type Allocation Code (TAC) or product identifier for production[1]:	35285930
Implementation Conformance Statement:	MTA_ICS_SAEL_02859_71
EMV Specification:	Version 3.0
EMV Specification Bulletins:	N/A
Contactless Level 1 Analog Test Cases:	Version 3.0a
Contactless Level 1 Digital Test Cases:	Version 3.0a
Contactless Level 1 Performance Test Cases:	Version 2.3
Contactless Level 1 Interoperability Test Requirements:	Version 1.4
Contactless Level 1 Test Cases Bulletins:	N/A

Exhibit C
iCashe's Infringement Contentions for U.S. Patent No. 9,483,722
Samsung Galaxy S21 5G Smartphone

Claim Language	Infringement Evidence
	Contactless Communication Protocol: ☒ Type A ☒ Type B Execution Environment: ☒ UICC[2] slot 1 ☐ UICC[2] slot 2 ☐ eSE ☒ HCE ☐ eUICC Mobile Product Operating System Name and Version: Android Version 11.0 NFC Controller Name and Version: SN110U V3 Version N/A NFC Controller Firmware Name and Version: N/A Version FW01.10.5A As a result, EMVCo has found reasonable evidence that the submitted samples sufficiently conform to the EMV Contactless Interface Specification version 3.0 and other EMVCo requirements. This finding is subject to the restrictions and comments in Attachment A. For a more detailed listing of the features supported by the product please review the Implementation Conformance Statement. EMVCo hereby (a) grants your EMVCo mobile type approval, based on the requirements stated in EMV Contactless Interface Specification version 3.0 and other EMVCo requirements, and (b) agrees to include your EMV mobile product in EMVCo's list of approved products. EMVCo mobile type approval does not extend to portions or components of a card or application that are not defined by EMV Contactless Interface Specification version 3.0. EMVCo's grant to your EMV mobile product is subject to and specifically incorporates (i) the General Terms and Conditions to the Letter of Approval enclosed as Exhibit A, and (ii) the Specific Terms and Conditions to the Letter of Approval attached hereto as Attachment A. Because EMVCo's grant is subject to such limitations, including certain events of termination, you and any third parties should confirm that such approval is current and has not been terminated by referring to the EMVCo list of approved products. https://www.emvco.com/wp-content/uploads/loa/MTA_LOA_SAEL_02859_24Nov20_SHORT.pdf (emphasis added).

Claim Language	Infringement Evidence
	The *EMV Level 1, Contactless Interface Specification*, Version 3.0 ("*EMV Level 1 Specification*") confirms that compliant devices, including the Galaxy S21, use load modulation for both Type A and Type B communications. Whether a device meets the reception requirements is measured by having the appropriate EMV Contactless Level 1 Test Equipment transmit a range of values for a number of parameters. That is: • Whether the receiver of a PCD meets the requirements is measured by having the EMV – TEST PICCs transmit different levels of load modulation. • The quality of the receiver of a PICC is verified by having the EMV – TEST PCD transmit different levels of modulation. In order to set up the transmitter of the EMV Contactless Level 1 Test Equipment, the receiver of the matching EMV Contactless Level 1 Test Equipment is used. That is: • The load modulation level of an EMV – TEST PICC is characterized with respect to the EMV – TEST PCD. • The modulation level of the EMV – TEST PCD is characterized with respect to the EMV – TEST PICCs. *EMV Level 1 Specification* at 24.

Claim Language	Infringement Evidence
	3.4.1 Introduction For the communication from PICC to PCD, both Type A and Type B use load modulation as shown in Figure 3.3. The carrier frequency f_c is used to derive a subcarrier with frequency f_s equal to $f_c/16$ (~847 kHz). Switching a load on and off at this frequency creates the subcarrier causing a different current to flow through the antenna of the PICC when in the loaded state than when in the unloaded state (the unloaded state of the subcarrier is the stable state when the PICC is not sending bits). This difference in current in the PICC antenna is sensed by the PCD. **Figure 3.3: Load Modulation** 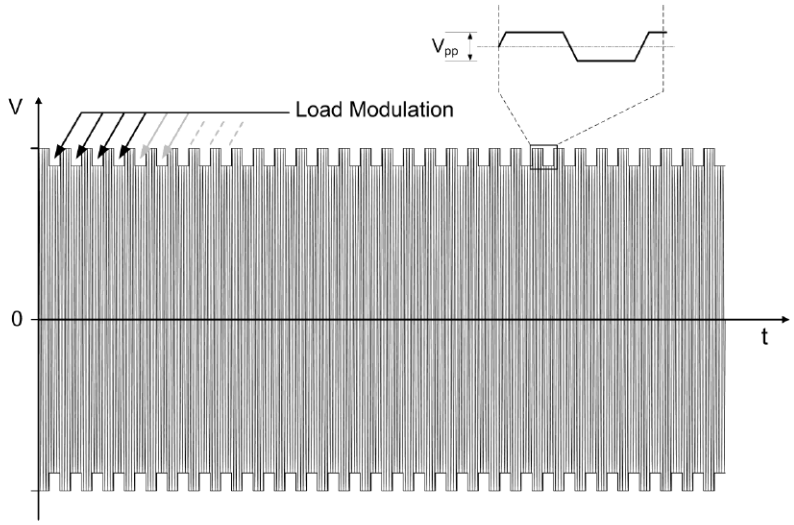 Type A modulates the subcarrier using On-Off Keying (OOK). *EMV Level 1 Specification* at 56.

Claim Language	Infringement Evidence
	Type B modulates the subcarrier using Binary Phase Shift Keying (BPSK) as shown in Figure 3.4. BPSK uses two signal phases: 0 degrees and 180 degrees. If the phase of the wave does not change with regard to a reference phase, then the signal state stays the same (low or high). If the phase of the wave changes by 180 degrees (i.e. the phase reverses) then the signal state changes. The reference phase is referred to as Ø0. **Figure 3.4: BPSK** 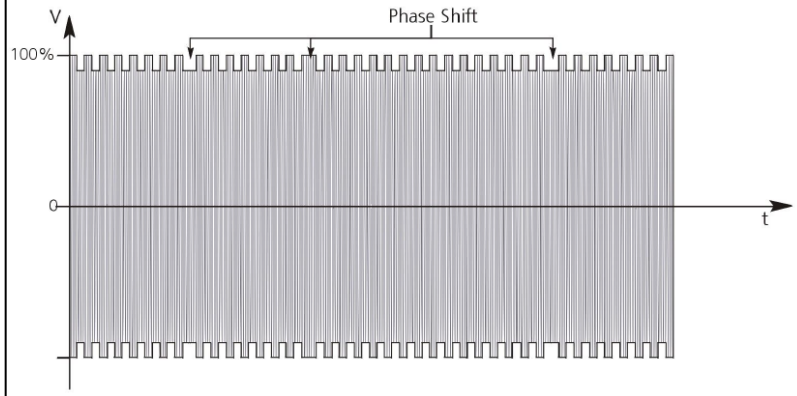 Note that, although this specification considers load modulation on a purely amplitude basis, in reality the load modulation produced by a PICC has a mixture of amplitude and phase components and consequently it is anticipated that future versions of this specification will introduce requirements that PCDs are able to receive load modulation signals that are comprised of a mixture of amplitude and phase modulation, e.g. by using IQ demodulation. All measurements described in this section are performed with the EMV – TEST PCD and the EMV – TEST PICCs calibrated as specified in *EMV Contactless Specifications for Payment Systems – Level 1 – Test Equipment Specifications – PCD Manual* and *EMV Contactless Specifications for Payment Systems – Level 1 – Test Equipment Specifications – PICC Manual*. The position of a PICC within the Operating Volume is indicated according to the convention specified in Annex B.

Claim Language	Infringement Evidence
	EMV Level 1 Specification at 57. The *ISO/IEC 14443-2:2020(E) Standard* ("*ISO/IEC 14443-2:2020(E)*") further confirms that compliant devices, including the Galaxy S21, use load modulation for both Type A and Type B communications.

Claim Language	Infringement Evidence
	ISO/IEC 14443-2:2020(E) In order to transmit data to the PCD, the PICC passively loads the PCD alternating magnetic field and/or actively contributes with its own alternating magnetic field. This is called load modulation. Within the manufacturer specified operating volumes (see 3.6), the PCD shall generate modulation pulses as described in Clauses 8 and 9 and shall be capable of receiving the minimum load modulation amplitude. NOTE 1 As an indication of the operating volume, the manufacturer can give the operating range (e.g. 0 to X cm) within which all requirements of this document are fulfilled. Test methods for the PCD communication signal interface are defined in ISO/IEC 10373-6. Two communication signal interfaces, Type A and Type B, are described in Clauses 8 and 9. The PCD shall alternate between modulation methods when idling before detecting the presence of a PICC of Type A or Type B. Only one communication signal interface may be active during a communication session until deactivation by the PCD or removal of the PICC. Subsequent session(s) may then proceed with either modulation method. Table 3 and Table 4 illustrate the concepts described in Clauses 8 and 9. **Table 3 — Example PCD to PICC communication signals for Type A and Type B interfaces** **Type A** / **Type B** **bit rates of $f_c/128$, $f_c/64$, $f_c/32$, and $f_c/16$**: Type A: ASK ~ 100 % modified Miller; Type B: ASK ~ 10 % NRZ-L **bit rates of $f_c/8$, $f_c/4$, and $f_c/2$**: ASK ~ 10 % NRZ–L **bit rates of $3f_c/4$, f_c, $3f_c/2$, and $2f_c$**: PSK, see 8.1.2.5. NOTE 2 For the coding of modified Miller, see 8.1.3.1. *ISO/IEC 14443-2:2020(E)* at 8.

Claim Language	Infringement Evidence
	Table 4 — Example PICC to PCD communication signals for Type A and Type B interfaces

	Type A	Type B
bit rate of $f_c/128$	Load modulation Subcarrier $f_c/16$ OOK Manchester 0 1 0 0	Load modulation Subcarrier $f_c/16$ BPSK NRZ-L 1 0 0 1
bit rate of $f_c/64$	Load modulation Subcarrier $f_c/16$ BPSK NRZ-L 1 1 0 1 0 0 0 1	

Table 4 *(continued)*

	Type A	Type B
bit rate of $f_c/32$	Load modulation Subcarrier $f_c/16$ BPSK NRZ-L 1 1 0 1 0 0 0 1 0 0 0 0 1 1 1 1	
bit rates of $f_c/16$, $f_c/8$, $f_c/4$, and $f_c/2$	Load modulation Subcarrier equals the bit rate BPSK NRZ-L 1 1 1 0 1 1 1 1 0 0 0 0 1 0 0 1 0 0 0 1 1 0 0 0 1 1 0 1 0 1 1 1	

ISO/IEC 14443-2:2020(E) at 8-9.

Claim Language	Infringement Evidence
	Testing of the Galaxy S21 further indicates the presence of the load modulation circuitry discussed above. As shown below in Figure 1, which displays the RF signal analysis during an ongoing transaction with an NFC reader, the Galaxy S21 emits two actively modulated sideband spikes plus the carrier frequency (13.56 MHz), i.e., at least one frequency sideband about a carrier frequency of an interrogating RF field. This confirms the presence of the load modulation circuitry discussed above. 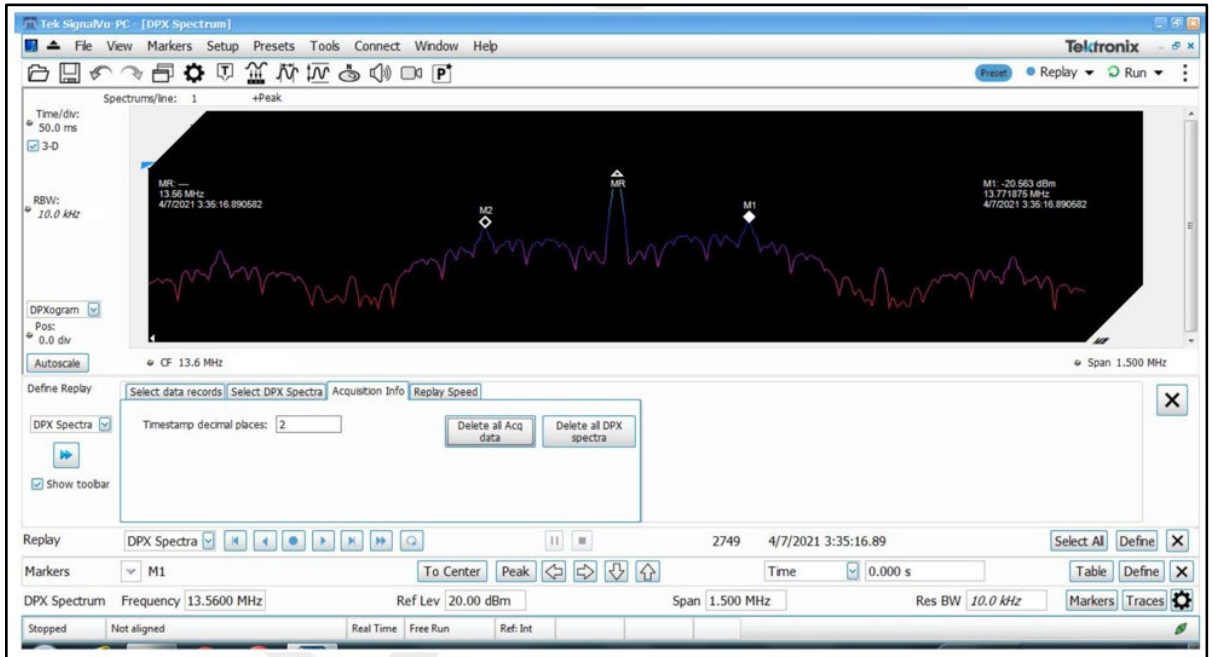 *Figure 1: Samsung Galaxy S21 5G with ongoing transaction showing actively modulated spikes of power*

Claim Language	Infringement Evidence
	Figure 2 below displays the RF signal analysis of the Galaxy S21 with the Samsung Pay application enabled but with no NFC reader present. Like Figure 1, the figure shows the frequency spectrum enabled by the SN110U consists of two actively modulated spikes (at $f_c/64$) plus the carrier frequency (13.56 MHz), i.e., at least one frequency sideband about a carrier frequency of an interrogating RF field. Thus, Figure 2 demonstrates that the NFC transmission from the Galaxy S21 does not depend on coupling with the NFC reader and is therefore the product of active load modulation circuitry of the SN110U. 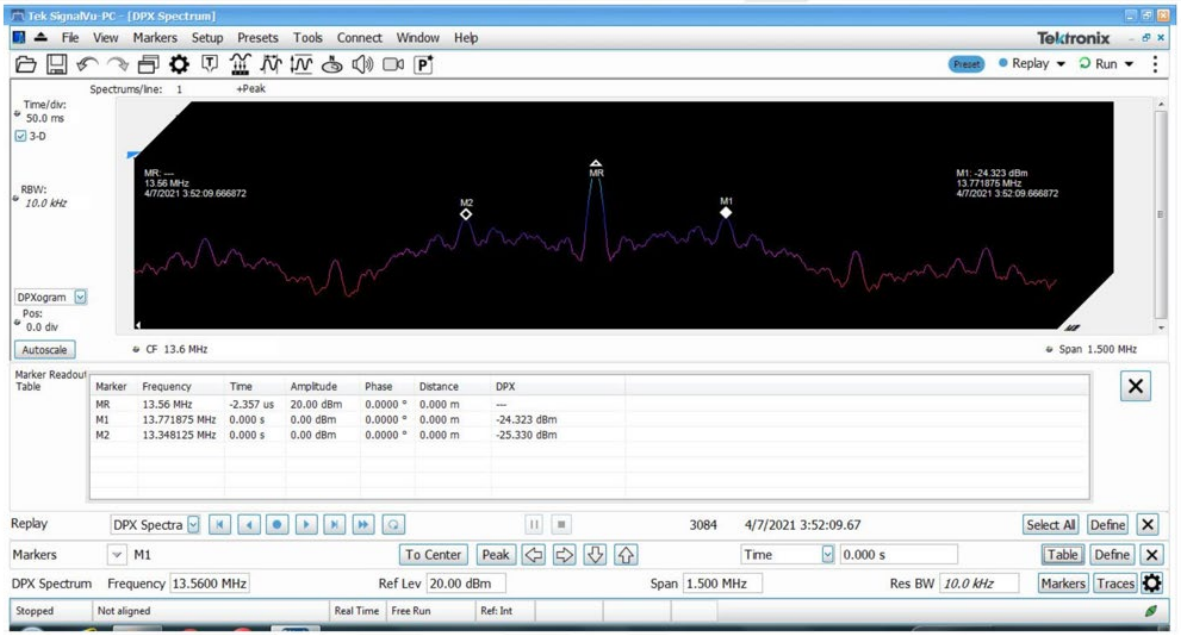 *Figure 2: Samsung Galaxy S21 5G near Square reader showing actively modulated spikes of power*

Claim Language	Infringement Evidence
	Additionally, as shown below, the *PN7150 Antenna Design and Matching Guide* depicts the transmit (Tx) and receive (Rx) paths between the Tx and Rx pads of the NFC chip, discussed above, and the antenna coil and matching circuitry. On information and belief and for the reasons discussed above, the SN110U chip and surrounding circuitry, matching circuitry, and antenna coil in the Galaxy S21 is configured in substantially the same manner in relevant part. 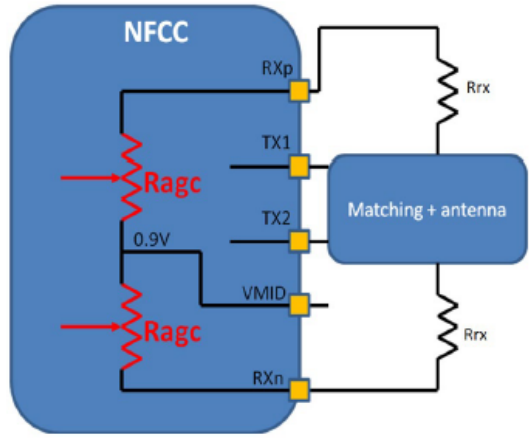 Fig 21. Rx path *PN7150 Antenna Design and Matching Guide* at 22. The load modulation circuitry is coupled to the TX pad(s) to form an outgoing data path. The amplifier, discussed below regarding limitation 1.c, is coupled to the RX pad to form an incoming data path. The load modulation circuitry thereby provides for half duplex communication, as per the NFC, ISO/IEC 14443 standard, the communications are at half-duplex, i.e., only TX or RX occurs at a given instance.

Claim Language	Infringement Evidence
	This specification addresses the digital protocol for NFC-enabled device communication, providing an implementation specification on top of the ISO/IEC 18092 and ISO/IEC 14443 standards. It harmonizes the integrated technologies, specifies implementation options and limits the interpretation of the standards; in essence, showing developers how to use NFC, ISO/IEC 14443 and JIS X6319-4 standards together to ensure global interoperability between different NFC devices, and between NFC devices and existing contactless infrastructure. The specification defines the common feature set that can be used consistently and without further modification for major NFC applications in areas such as financial services and public transport. The specification covers the digital interface and the half-duplex transmission protocol of the NFC-enabled device in its four roles as Initiator, Target, Reader/Writer and Card Emulator. It includes bit level coding, bit rates, frame formats, protocols, and command sets, which are used by NFC-enabled devices to exchange data and bind to the LLCP protocol. https://nfc-forum.org/build/specifications.
[1.b] an antenna tuned to operate at 13.56 MHz; and	The Galaxy S21 contains an antenna tuned to operate at 13.56 MHz. The antenna, used to transmit and receive NFC information and transaction sequences, is part of the NFC antenna and charging coil assembly component depicted below.

Exhibit C
iCashe's Infringement Contentions for U.S. Patent No. 9,483,722
Samsung Galaxy S21 5G Smartphone

Claim Language	Infringement Evidence
	 Teardown image from Samsung Galaxy S21 5G smartphone (emphasis added).

Claim Language	Infringement Evidence
	 Teardown image from Samsung Galaxy S21 5G smartphone (emphasis added). The antenna is tuned to operate at 13.56 MHz. As shown below, the NFC system of the Galaxy S21 operates at 13.56 MHz.

Claim Language	Infringement Evidence
	HCT CO.,LTD. 74, Seoicheon-ro 578beon-gil, Majang-myeon, Icheon-si, Gyeonggi-do, 17383, Rep. of KOREA TEL: +82-31-645-6300 FAX: +82-31-645-6401 **FCC NFC REPORT** **Certification** **Applicant Name:** SAMSUNG Electronics Co., Ltd. **Address:** 129, Samsung-ro, Yeongtong-gu, Suwon-si, Gyeonggi-do, 16677, Rep. of Korea **Date of Issue:** October 29, 2020 **Test Site/Location:** 74, Seoicheon-ro 578beon-gil, Majang-myeon, Icheon-si, Gyeonggi-do, 17383 KOREA **Report No.:** HCT-RF-2010-FC011 **FCC ID:** A3LSMG991U **APPLICANT:** SAMSUNG Electronics Co., Ltd. **Model:** SM-G991U **Additional Model:** SM-G991U1 **EUT Type:** Mobile Phone **RF Output Field Strength:** 18.19 dBuV/m @30 m **Frequency of Operation:** 13.56 MHz **Modulation type:** ASK **FCC Classification:** Low Power Communication Device – Transmitter **FCC Rule Part(s):** FCC Part 15.225 Subpart C *FCC NFC Test Report for Samsung Galaxy S21 Smartphone* at 1(emphasis added).

Claim Language	Infringement Evidence
	 FCC NFC Test Report for Samsung Galaxy S21 Smartphone at 23 (emphasis added).
[1.c] at least one active circuit coupled between the smartcard controller and the antenna, wherein the at least one active circuit includes an amplifier	The Galaxy S21 includes at least one active circuit coupled between the smartcard controller and the antenna, wherein the at least one active circuit includes an amplifier coupled to be powered by the mobile device, and wherein the amplifier is coupled to amplify a signal received from the antenna and to provide an amplified signal to the smartcard controller.

Claim Language	Infringement Evidence
coupled to be powered by the mobile device, and wherein the amplifier is coupled to amplify a signal received from the antenna and to provide an amplified signal to the smartcard controller, and	The at least one active circuit coupled between the smartcard controller and the antenna includes an amplifier. As discussed above regarding limitation 1.a, the SN110U chip contains a secure element and an embedded NFC controller and associated blocks and functionality for communicating with a point-of-sale terminal via NFC protocols. Portions of the embedded secure element of the SN110U form all or part of the smartcard controller within the Galaxy S21. Additionally, portions of the embedded NFC controller of the SN110U may form part of the smartcard controller within the Galaxy S21.

Claim Language	Infringement Evidence
	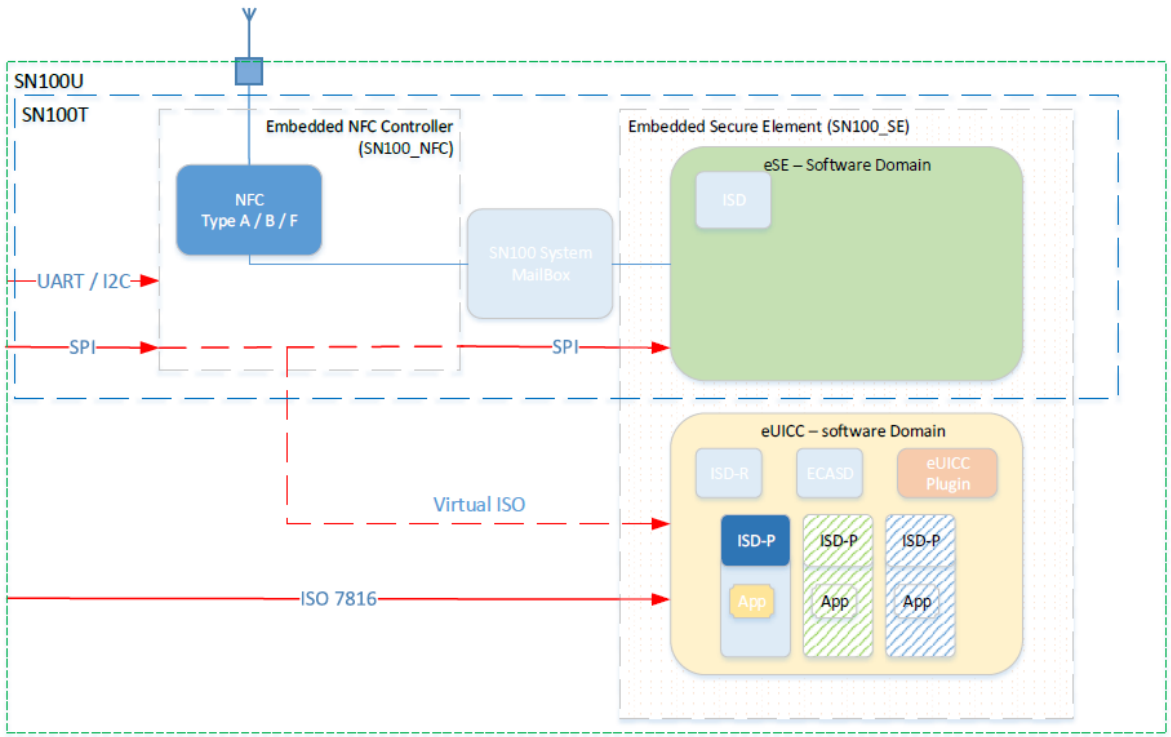 **Fig. 1.2:** SN100x Product Configurations *NXP SN100T Secure Element Specification* at 5. The circuitry of the SN110U, including the embedded NFC controller and its functional blocks and circuitry, as well as the embedded secure element, has smartcard circuitry that performs various

Claim Language	Infringement Evidence
	signal amplification and load modulation functions that provide for communication with a point-of-sale terminal. As evidenced by the Galaxy S21's NFC-based Samsung Pay functionality, for example, the smartcard circuitry includes a functional block to amplify the signal received from the NFC reader via the Galaxy S21's antenna. The Galaxy S21 is able to perform NFC payment transactions with an NFC reader both at a distance and at off-angles from the reader. An NFC payment transaction can be completed by placing the Galaxy S21 (and specifically its antenna) "within four centimeters" of an NFC payment terminal. This distance indicates that the received signal is necessarily amplified, as further discussed below.

Claim Language	Infringement Evidence
	NFC and payment Near Field Communication (NFC) allows you to communicate with another device without connecting to a network. This technology is used by Android Beam and certain payment apps. The device that you are transferring to needs to support NFC, and it needs to be within four centimeters of your device. ◌ From Settings, tap Connections > NFC and contactless payments, and then tap to turn on this feature. **Tap and pay** Use an NFC payment app to make payments by touching your device to a compatible credit card reader. 1. From Settings, tap Connections > NFC and contactless payments, and then tap to turn on NFC. 2. Tap Contactless payments to see the default payment app. • To use another payment app, tap an available app to choose it. • To use a payment app that is open, tap Pay with currently open app. • To set another payment service as the default, tap Others, and then tap the service you prefer. TIP NFC technology is used with Samsung Pay. Turn on this feature to see how easy and secure it is to use your device to make payments. *Galaxy S21 User Manual* at 118 (emphasis added). As discussed above as to limitation 1.a, the NXP SN110U chip and surrounding circuitry operates in substantially the same manner in relevant part as the PN7150 and its surrounding circuitry. On

Claim Language	Infringement Evidence
	information and belief, the NXP SN110U chip and surrounding circuitry include a baseband amplifier that operates to amplify received antenna signals as described below. The *PN7150 Antenna Design and Matching Guide* describes the manner in which the PN7150 amplifies a received signal. As shown below, the *PN7150 Antenna Design and Matching Guide* depicts the receive (Rx) path between the antenna, the matching circuitry, and the NFC chip itself. 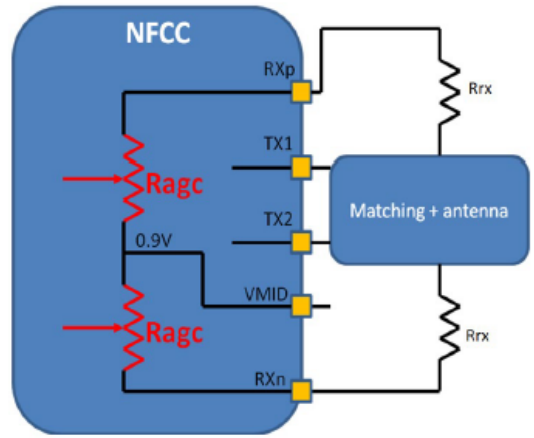 Fig 21. Rx path *PN7150 Antenna Design and Matching Guide* at 22. The Rx path is received at Rx pins (RXN and RXP), as shown below with respect to the PN7150.

Claim Language	Infringement Evidence
	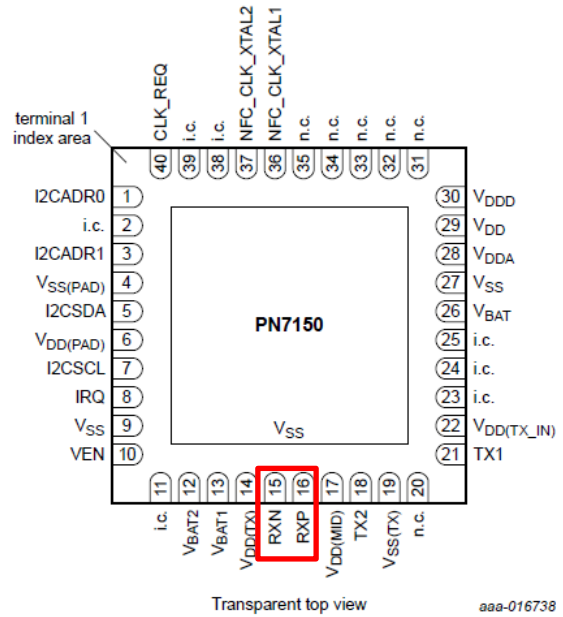 Fig 4. Pinning *PN7150 Data Sheet* at 11 (emphasis added). The *PN7150 Antenna Design and Matching Guide* describes setting an amplification level of a baseband amplifier (i.e., RX_GAIN) of the NFC chip to amplify a received Rx signal.

Claim Language	Infringement Evidence
	5.5.3 Configuring registers in Reader Mode for Rx path optimization **5.5.3.1 CLIF_ANA_RX_REG** **a. Register definition** CLIF_ANA_RX_REG can be fine-tuned to improve the analog down-sampling and baseband amplification of the card response before it is processed by the digital block. *PN7150 Antenna Design and Matching Guide* at 62.

Claim Language	Infringement Evidence
	○ **[1:0]: RX_GAIN** Set the amplification level of the **BaseBandAmplifier** - Care: The gain must be set in combination with the HPCF parameter taking into account the optimization of the disturbances in the down-mixed RX signal. - Value range: 10b … 11b High performance & sensitivity for max reading rang: Strongly depends on the SNR in the system 01b … 10b Typical 00b High robustness & stability but low reading range **Table 17. CLIF_ANA_RX_ REG register in reader mode** **Bit** / **Symbol** / **Description** [15:4] / Internal use / Must not be modified **[3:2]** / **RX_HPCF** / **Lower Corner Frequency: 00->45kHz 01->85kHz 10->150kHz 11->250kHz** **[1:0]** / **RX_GAIN** / **Gain Adjustment BBA: 00->33dB** *PN7150 Antenna Design and Matching Guide* at 63. Although certain information regarding the functional blocks and circuitry of the baseband amplifier in the SN110U and PN7150 is not publicly available, NXP also has published detailed information about the functional blocks and circuitry of other NXP NFC chips, including the PN5180. The PN5180 is a highly integrated high performance full NFC Forum-compliant frontend IC for contactless communication at 13.56 MHz. Functionality of the PN5180 is described in the

Claim Language	Infringement Evidence
	publicly available *PN5180 A0xx/C1/C2 High-Performance Multi-Protocol Full NFC Frontend, Supporting all NFC Forum Modes, Rev. 3.6* (May 7, 2018) ("*PN5180 Data Sheet*"). As a highly integrated high performance full NFC Forum-compliant frontend IC for contactless communication at 13.56 MHz, this frontend IC utilizes an outstanding modulation and demodulation concept completely integrated for different kinds of contactless communication methods and protocols. *PN5180 Data Sheet* at 2. The PN5180 frontend IC supports the following RF operating modes: • Reader/Writer mode supporting ISO/IEC 14443 type A up to 848 kBit/s • Reader/Writer communication mode for MIFARE Classic contactless IC • Reader/Writer mode supporting ISO/IEC 14443 type B up to 848 kBit/s • Reader/Writer mode supporting JIS X 6319-4 (comparable with FeliCa scheme) • Supports reading of all NFC tag types (type 1, type 2, type 3, type 4A and type 4B) • Reader/Writer mode supporting ISO/IEC 15693 • Reader/Writer mode supporting ISO/IEC 18000-3 Mode 3 • ISO/IEC 18092 (NFC-IP1) • ISO/IEC 21481 (NFC-IP-2) • ISO/IEC 14443 type A Card emulation up to 848 kBit/s *PN5180 Data Sheet* at 2. The *PN5180 Data Sheet* provides additional detail regarding amplifier circuitry within NXP NFC chips like the PN5180, PN7150, and SN110U. Like the PN7150, the PN5180 also has Rx pins for receiving an antenna signal along an Rx path. The antenna signal is received at a Receiver block, shown below.

Claim Language	Infringement Evidence
	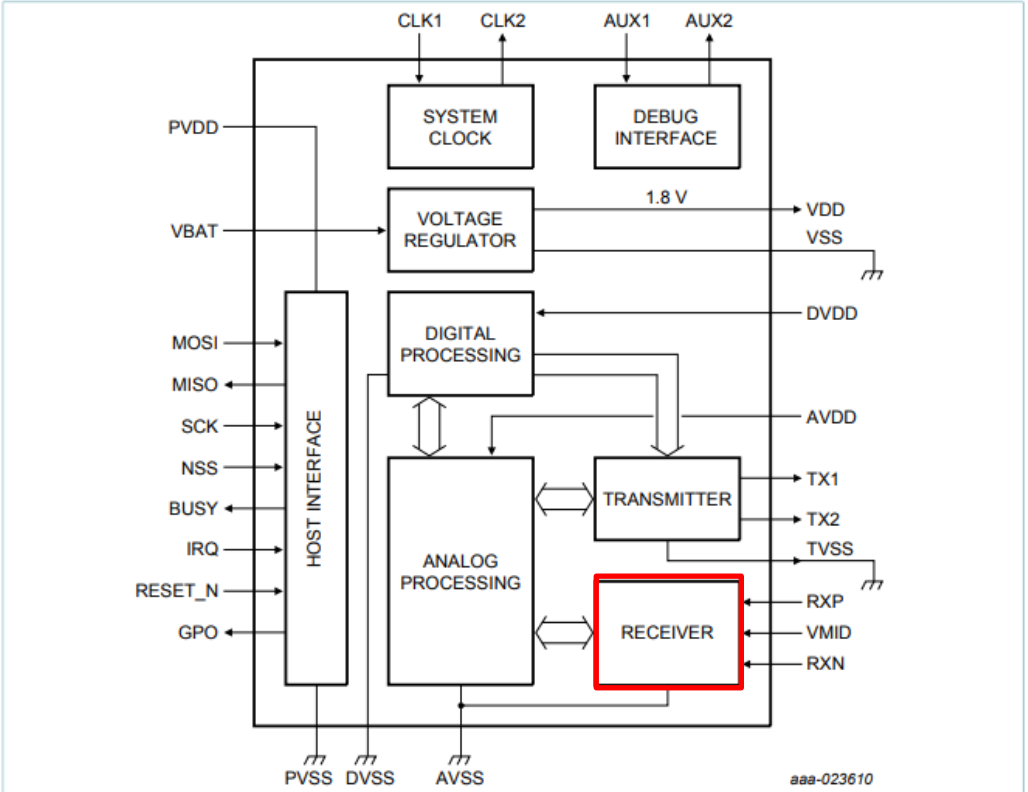 **Figure 2. PN5180 Block diagram** *PN5180 Data Sheet* at 11 (emphasis added).

Claim Language	Infringement Evidence
	The Receiver block includes baseband amplifiers (BBAs) to adjust the analog gain (i.e., the RX_GAIN) of the I-channel and Q-channel. The Receiver block diagram is shown below. 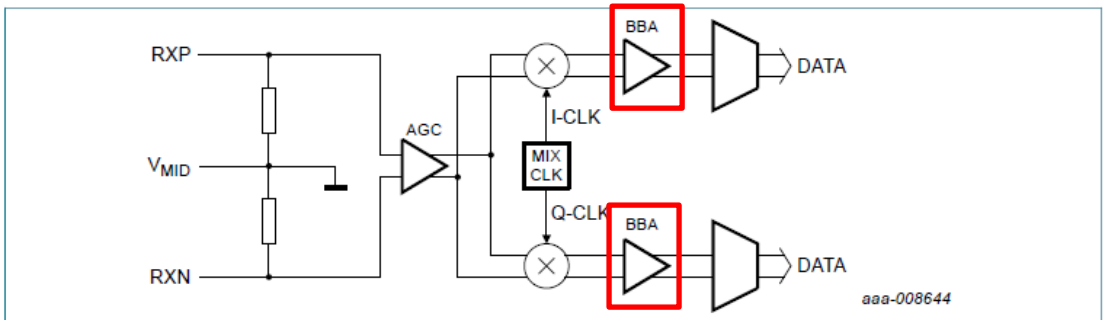 Figure 38. PN5180 Receiver Block diagram *PN5180 Data Sheet* at 82 (emphasis added). On information and belief, the baseband amplifier of the PN7150, as well as the amplifier circuitry of the SN110U, is substantially similar in relevant part to amplifier circuitry described with respect to the PN5180. iCashe has not received any discovery regarding the operation of the SN110U chip. iCashe reserves the right to modify its contentions based on non-public information learned through discovery, including, *inter alia*, any differences in functionality across the SN110U, the PN7150, and the PN5180. As further described with respect to the PN5180, the amplifier circuitry provides the amplified signal to the smartcard controller via I-channel and Q-channel analog-to-digital converters (ADCs).

Claim Language	Infringement Evidence
	Reader Mode Receiver In Reader Mode, the response of the PICC device is coupled from the PCB antenna to the differential input RXP/RXN. The Reader Mode Receiver extracts this signal by first removing the carrier in passive mixers (direct conversion for I and Q), then filtering and amplifying the baseband signal, and finally converting to digital values with 2 separate ADCs for I and Q channel. Both the I and Q channels have a differential structure which improves the signal quality. The I/Q-Mixer mixes the differential input RF-signal down to the baseband. The mixer has a band with of 2 MHz. The down mixed differential RX input signals are passed to the BBA and band-pass filtered. In order to consider all the various protocols (Type A/B, FeliCa), the high-pass cut-off frequency of BBA can be configured between 45 kHz and 250 kHz in 4 different steps. The low-pass cut-off frequency is above 2 MHz. This band-passed signal is then further amplified with a gain factor which is configurable between 30 dB and 60 dB. The baseband amplifier (BBA)/ADC I- and Q- channel can be enabled separately. This is required for ADC-based CardMode functionality as only the I-channel is used in this case. *PN5180 Data Sheet* at 81. The PN7150 also contains an ADC, which receives the amplified signal and provides it to the smartcard controller, as shown below.

Claim Language	Infringement Evidence
	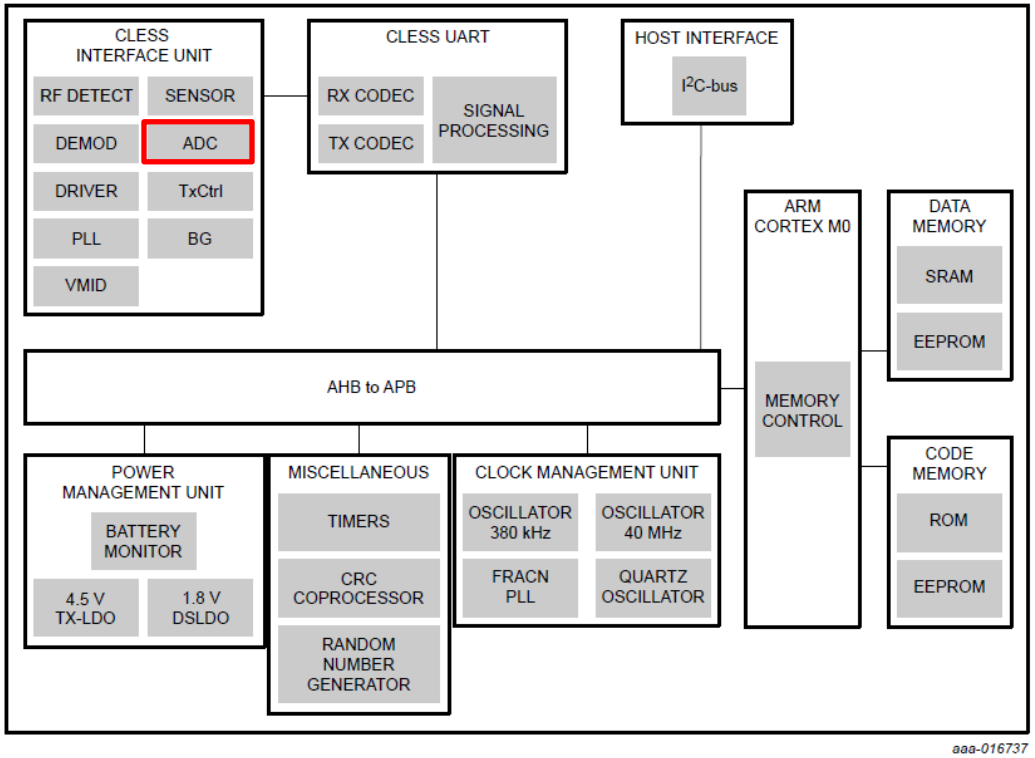 Fig 3. PN7150 block diagram *PN7150 Data Sheet* at 10 (emphasis added). On information and belief, the SN110U chip contains functional blocks and circuitry within the embedded NFC controller that correspond to the amplifier(s) and ADC(s) shown and described

Claim Language	Infringement Evidence
	with respect to the PN5180 and PN7150. iCashe reserves the right to modify its contentions based on non-public information learned through discovery, including, *inter alia*, any differences in functionality across the SN110U, the PN7150, and the PN5180. The amplifier is arranged between the antenna and the smartcard controller, so as to amplify signals received at the antenna and provide an amplified signal to the smartcard controller.

Claim Language	Infringement Evidence
	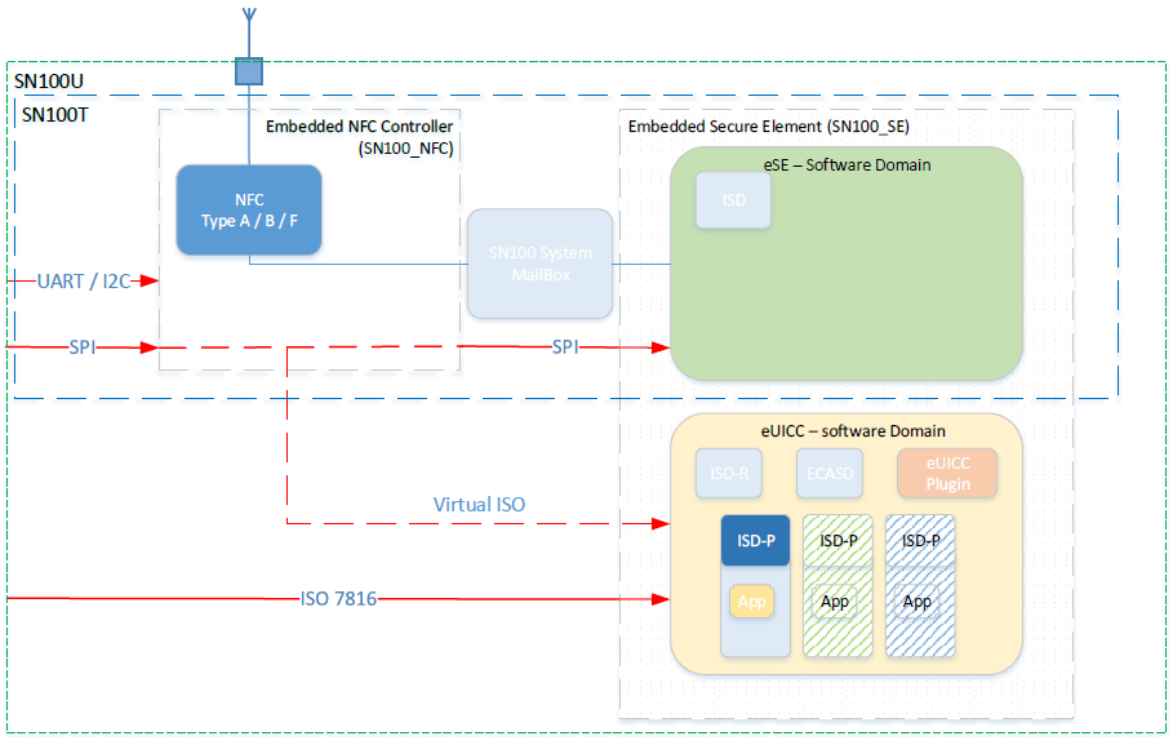 **Fig. 1.2:** SN100x Product Configurations *NXP SN100T Secure Element Specification* at 5. The amplifier is located on the NXP SN110U chip, which is coupled to the power source, i.e., the Galaxy S21 battery shown below, to receive power.

Claim Language	Infringement Evidence
	  Teardown image from Samsung Galaxy S21 5G smartphone (emphasis added). Additionally, testing demonstrates that the NFC transmission from the Galaxy S21 does not depend on coupling with the NFC reader, indicating that the SN110U chip is powered. Its power source is the battery of the Galaxy S21.

Claim Language	Infringement Evidence
	As described with respect to limitation 1.a, testing indicates that the Galaxy S21 utilizes ALM functionality. As shown below in Figure 1, which displays the RF signal analysis during an ongoing transaction with an NFC reader, the Galaxy S21 emits two actively modulated sideband spikes plus the carrier frequency (13.56 MHz). This confirms the presence of the load modulation circuitry discussed above. 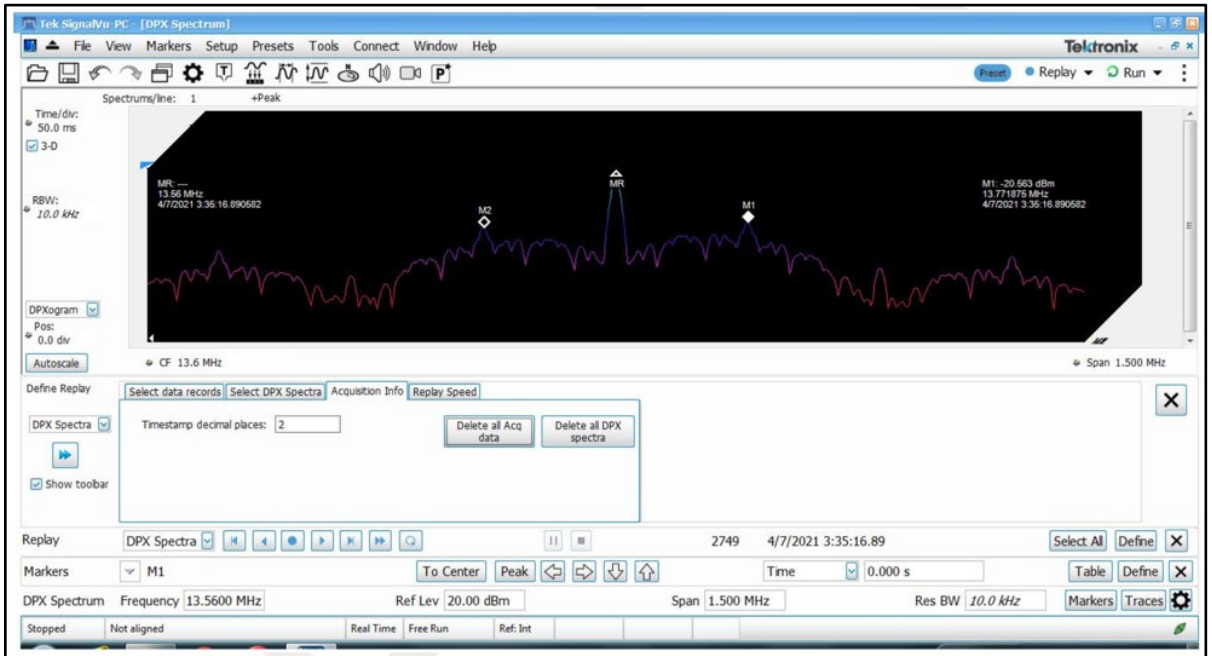 *Figure 1: Samsung Galaxy S21 5G with ongoing transaction showing actively modulated spikes of power* Figure 2 below displays the RF signal analysis of the Galaxy S21 with the Samsung Pay application enabled but with no NFC reader present. Like Figure 1, the figure shows the frequency spectrum

Claim Language	Infringement Evidence
	enabled by the smartcard circuitry consists of two actively modulated spikes (at $f_c/64$) plus the carrier frequency (13.56 MHz). Thus, Figure 2 demonstrates that the NFC transmission from the Galaxy S21 does not depend on coupling with (or power from) the NFC reader. Figure 2 demonstrates that the SN110U chip is powered by the Galaxy S21 battery. *Figure 2: Samsung Galaxy S21 5G near Square reader showing actively modulated spikes of power*
[1.d] the at least one active circuit further includes a transmit circuit coupled between the smartcard	The at least one active circuit of the Galaxy S21 further includes a transmit circuit coupled between the smartcard controller and the antenna that in operation forms a signal that mimics the at least one frequency sideband and wherein the signal drives the antenna.

Claim Language	Infringement Evidence
controller and the antenna that in operation forms a signal that mimics the at least one frequency sideband and wherein the signal drives the antenna.	As discussed above with respect to limitation 1.a, the SN110U chip of the Galaxy S21 has a functional block for actively transmitting modulated data to the NFC reader for conducting the transaction. As discussed above as to limitation 1.a, the NXP SN110U chip and surrounding circuitry operates in substantially the same manner in relevant part as the PN7150 and its surrounding circuitry. Specifically, on information and belief, the NXP SN110U chip and surrounding circuitry include a transmit circuit that operates in substantially the same manner as the PN7150 as described in the *PN7150 Antenna Design and Matching Guide*. As shown below, the *PN7150 Antenna Design and Matching Guide* depicts the transmit (Tx) path between the Tx pads of the NFC chip and the antenna coil and matching circuitry. On information and belief and for the reasons discussed above, the NXP SN110U chip and surrounding circuitry, matching circuitry, and antenna coil in the Galaxy S21 are configured in substantially the same manner in relevant part.

Claim Language	Infringement Evidence
	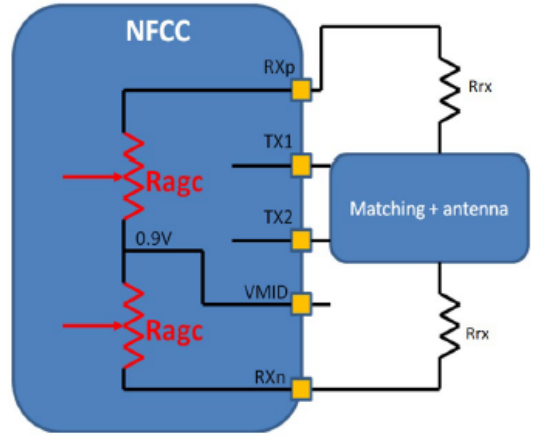 Fig 21. Rx path *PN7150 Antenna Design and Matching Guide* at 22. The signal drives the antenna. As discussed above, on information and belief, the SN110U chip contains circuitry and functional blocks within the embedded NFC controller that correspond to certain circuitry and functional blocks within the CIU of the PN7150. The CIU includes a driver block/circuits and transmitter control block, TxCtrl, coupled to drive the antenna, as shown below. The transmit circuitry in the CIU is coupled between the smartcard controller and the antenna.

Claim Language	Infringement Evidence
	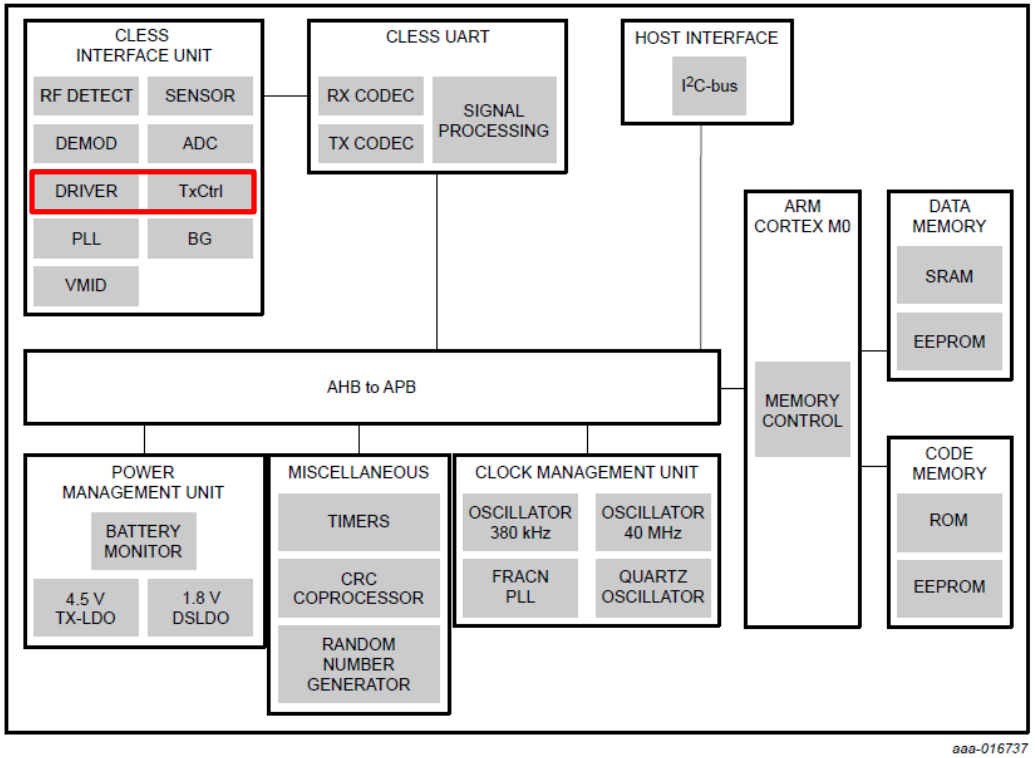 Fig 3. PN7150 block diagram *PN7150 Data Sheet* at 10 (emphasis added). The *PN5180 Data Sheet* provides additional detail regarding transmitter circuitry within NXP NFC chips like the PN5180, PN7150, and SN110U. Like the PN7150, the PN5180 also has Tx pins for

Claim Language	Infringement Evidence
	driving an antenna signal along a Tx path. iCashe has not received any discovery regarding the operation of the SN110U chip. iCashe reserves the right to modify its contentions based on non-public information learned through discovery, including, *inter alia*, any differences in functionality across the SN110U, the PN7150, and the PN5180. 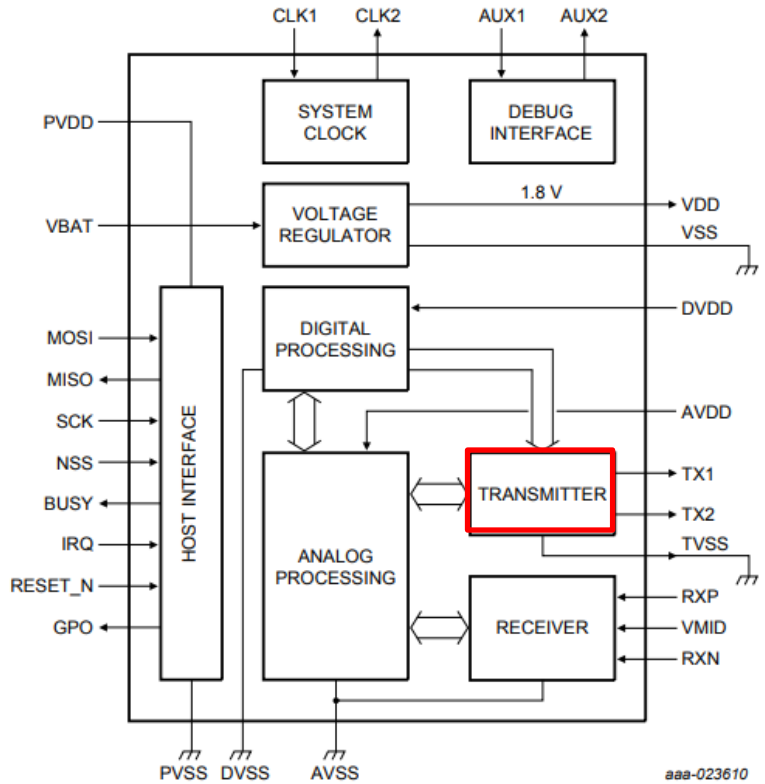 Figure 2. PN5180 Block diagram

Claim Language	Infringement Evidence
	PN5180 Data Sheet at 11 (emphasis added). **Transmitter TX** The transmitter is able to drive an antenna circuit connected to outputs TX1 and TX2 with a 13.56 MHz carrier signal. The signal delivered on pins TX1 and pin TX2 is the 13.56 MHz carrier modulated by an envelope signal for energy and data transmission. It can be used to drive an antenna directly, using a few passive components for matching and filtering. For a differential antenna configuration, either TX1 or TX2 can be configured to put out an inverted clock. 100 % modulation and several levels of amplitude modulation on the carrier can be performed to support 13.56 MHz carrier-based RF-reader/writer protocols as defined by standards ISO/IEC14443 type A and B, FeliCa and ISO/IEC 18092. 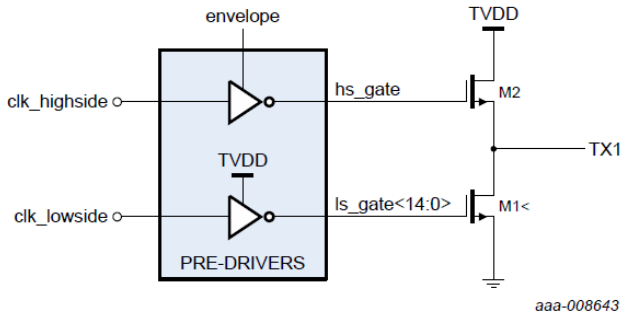 **Figure 29. PN5180 Output driver** *PN5180 Data Sheet* at 70.

Claim Language	Infringement Evidence
	On information and belief, the SN110U chip contains functional blocks and circuitry within the embedded NFC controller that correspond to the active load modulation circuitry (i.e., the load modulation circuit) shown and described with respect to the PN7150 and PN5180.[1] Testing of the Samsung Galaxy S21 5G smartphone indicates that the transmit circuit of the NXP SN110U chip forms a signal that mimics the at least one frequency sideband and drives the antenna. Figure 2 below displays an RF signal analysis of the Samsung Galaxy S21 5G smartphone with the Samsung Pay application enabled but with no NFC reader present. The figure shows the frequency spectrum enabled by the transmit circuit consists of two actively modulated sidebands plus the carrier frequency.

[1] Again, iCashe has not received any discovery regarding the operation of the SN110U chip and thus uses the PN5180 throughout this chart for the limited purpose of illustrating the likely presence of similar, corresponding circuitry in the SN110U chip. On information and belief, similar circuitry (and additional circuitry) is present in the SN110U chip. To the extent the cited circuitry of the PN5180 includes passive circuitry components or to the extent the PN5180 does not support active load modulation in certain operating modes, iCashe does not contend that such passive circuitry, alone, satisfies the relevant limitations of the asserted claims.

Claim Language	Infringement Evidence
	 Figure 2: Samsung Galaxy S21 5G near Square reader showing actively modulated spikes of power
2. The mobile device of claim 1 wherein the antenna comprises an inductive element too small to draw enough power sufficient to operate the smartcard controller from the interrogating radio frequency (RF) field.	*See* claim 1, above. The antenna of Galaxy S21 comprises an inductive element too small to draw enough power sufficient to operate the smartcard controller from the interrogating radio frequency (RF) field. As described above with respect to claim 1, the SN110U contains a smartcard controller used to complete NFC operations, such as NFC payment transactions via Samsung Pay.

Claim Language	Infringement Evidence
	As additionally described with respect to claim 1, the Galaxy S21 has an antenna used to transmit and receive NFC information and transaction sequences. The antenna is tuned to operate at 13.56 MHz. The antenna is shown below. 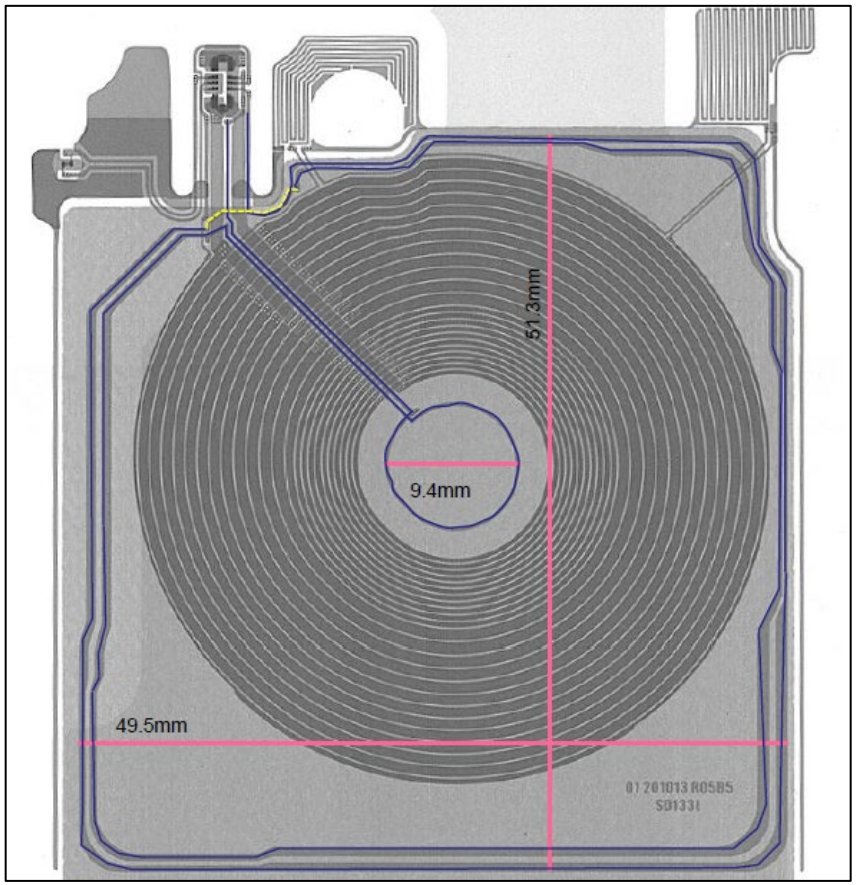

Claim Language	Infringement Evidence
	Teardown image from Samsung Galaxy S21 5G smartphone (emphasis added). As shown above, the antenna of the Galaxy S21 has two loops and an approximate length of between 400 mm and 500 mm. On information and belief, the antenna of the Galaxy S21 is too small to draw enough power sufficient to operate the smartcard controller from an interrogating radio frequency (RF) field. Further, testing indicates that the NFC transmission from the Samsung Galaxy S21 does not depend on power derived from an RF field. Testing indicates that the Galaxy S21 utilizes ALM functionality. As shown below in Figure 1, which displays the RF signal analysis during an ongoing transaction with an NFC reader, the Galaxy S21 emits two actively modulated sideband spikes plus the carrier frequency (13.56 MHz). This confirms the presence of the load modulation circuitry discussed above.

Claim Language	Infringement Evidence
	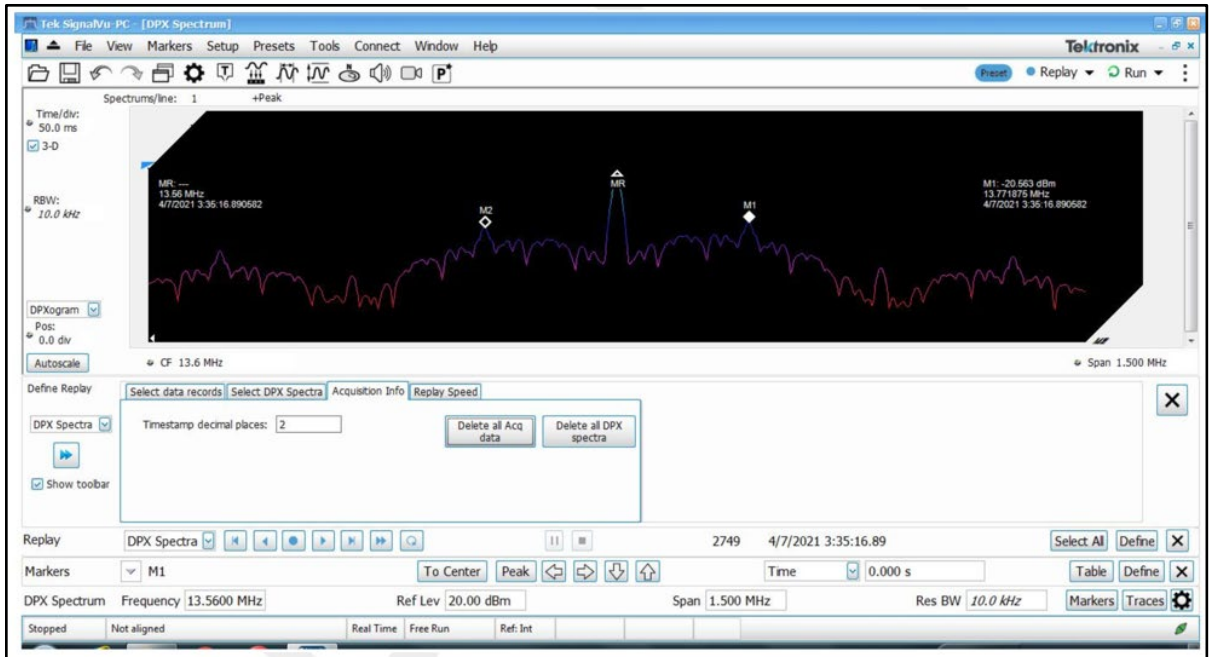 *Figure 1: Samsung Galaxy S21 5G with ongoing transaction showing actively modulated spikes of power* Figure 2 below displays the RF signal analysis of the Galaxy S21 with the Samsung Pay application enabled but with no NFC reader present. Like Figure 1, the figure shows the frequency spectrum enabled by the smartcard circuitry consists of two actively modulated spikes (at $f_c/64$) plus the carrier frequency (13.56 MHz). Thus, Figure 2 demonstrates that the NFC transmission from the Galaxy S21 does not depend on coupling with (or power from) the NFC reader.

Claim Language	Infringement Evidence
	 Figure 2: Samsung Galaxy S21 5G near Square reader showing actively modulated spikes of power
3. The mobile device of claim 1 wherein the smartcard controller is coupled to be powered by the mobile device.	*See* claim 1, above. The smartcard controller of the Galaxy S21 is coupled to be powered by the mobile device. The Galaxy S21 is a mobile device. The Galaxy S21 battery, shown below, is a power source.

Claim Language	Infringement Evidence
	  Teardown image from Samsung Galaxy S21 5G smartphone (emphasis added). As discussed above with respect to claim 1, the SN110U contains a smartcard controller used to complete NFC operations, such as NFC payment transactions via Samsung Pay. The SN110U is coupled to the battery of the Galaxy S21 to receive power.

Claim Language	Infringement Evidence
	Further, testing indicates that the NFC transmission from the Samsung Galaxy S21 is powered by the device itself. Testing indicates that the Galaxy S21 utilizes ALM functionality. As shown below in Figure 1, which displays the RF signal analysis during an ongoing transaction with an NFC reader, the Galaxy S21 emits two actively modulated sideband spikes plus the carrier frequency (13.56 MHz). This confirms the presence of the load modulation circuitry discussed above. 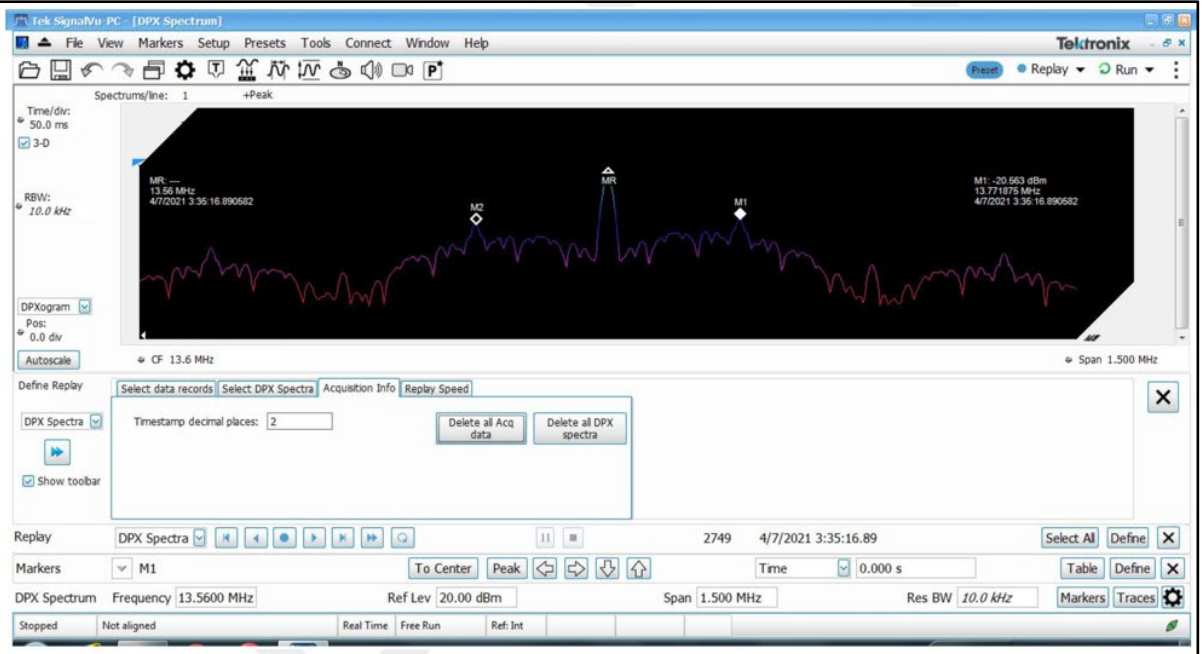 *Figure 1: Samsung Galaxy S21 5G with ongoing transaction showing actively modulated spikes of power*

Claim Language	Infringement Evidence
	Figure 2 below displays the RF signal analysis of the Galaxy S21 with the Samsung Pay application enabled but with no NFC reader present. Like Figure 1, the figure shows the frequency spectrum enabled by the smartcard circuitry consists of two actively modulated spikes (at $f_c/64$) plus the carrier frequency (13.56 MHz). Thus, Figure 2 demonstrates that the NFC transmission from the Galaxy S21 does not depend on coupling with (or power from) the NFC reader and is therefore the product of an active load modulation circuit. Thus, Figure 2 demonstrates that the SN110U, including the smartcard controller, is powered by the Galaxy S21 battery. 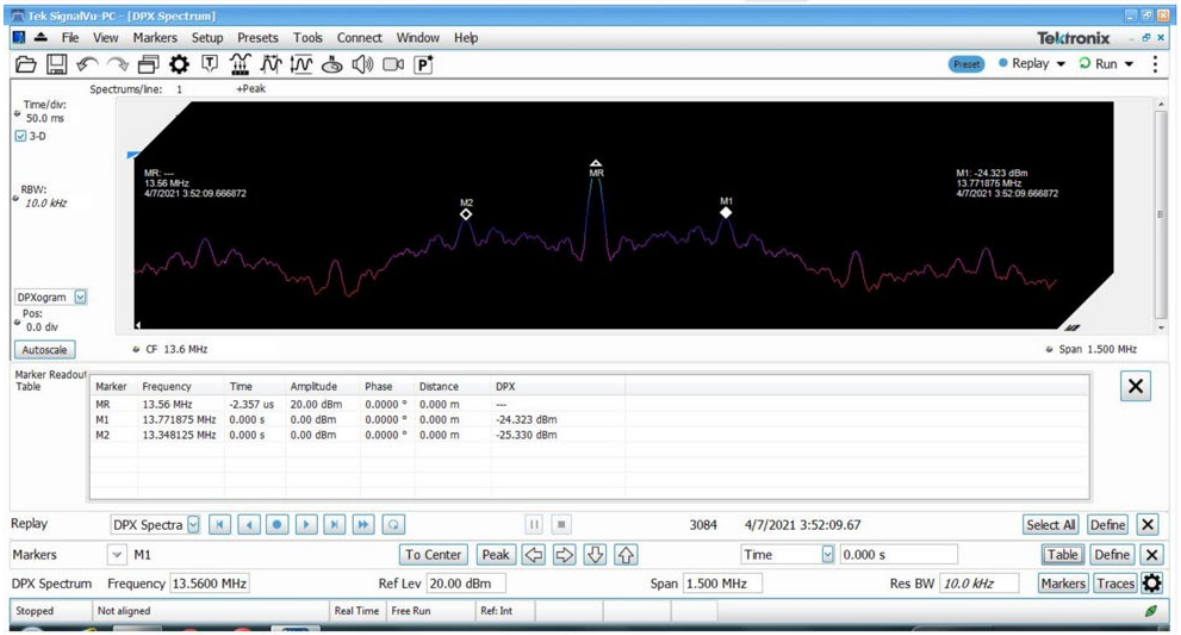 *Figure 2: Samsung Galaxy S21 5G near Square reader showing actively modulated spikes of power*

Exhibit C
iCashe's Infringement Contentions for U.S. Patent No. 9,483,722
Samsung Galaxy S21 5G Smartphone

Claim Language	Infringement Evidence
4. The mobile device of claim 1 wherein the mobile device comprises a mobile phone.	*See* claim 1, above. The Galaxy S21 is a mobile phone. https://www.samsung.com/us/smartphones/galaxy-s-series/certified-re-newed-store/buy/?modelCode=SM5G991UZAAXAA.

Exhibit C
iCashe's Infringement Contentions for U.S. Patent No. 9,483,722
Samsung Galaxy S21 5G Smartphone

Claim Language	Infringement Evidence
	Galaxy 5G 5G DEVICES WHAT IS 5G? Galaxy S21 Ultra 5G / Galaxy S21+ 5G / Galaxy S21 5G Color: Phantom Black, Phantom Silver / Phantom Violet, Phantom Black, Phantom Silver / Phantom Pink, Phantom Violet, Phantom Gray, Phantom White Connectivity: 5G (sub6 + mmW) / 5G (sub6 + mmW) / 5G (sub6 + mmW) Battery: 5000mAh (typical) / 4800mAh (typical) / 4000mAh (typical) Processor: Octa-Core 2.8GHz, 2.4GHz, 1.8GH / Octa-Core 2.8GHz, 2.4GHz, 1.8GHz / Octa-Core 2.8GHz, 2.4GHz, 1.8GHz https://web.archive.org/web/20211111133651/https:/www.samsung.com/us/mobile/5g/.
5. A mobile device comprising:	The Samsung Galaxy S21 5G smartphone ("Galaxy S21") is a mobile device. *See* claim 1, above.

Exhibit C
iCashe's Infringement Contentions for U.S. Patent No. 9,483,722
Samsung Galaxy S21 5G Smartphone

Claim Language	Infringement Evidence
[5.a] a smartcard controller that includes load modulation circuitry for half duplex communication by creating at least one frequency sideband about a carrier frequency of an interrogating radio frequency (RF) field;	The Galaxy S21 contains a smartcard controller that includes load modulation circuitry for half duplex communication by creating at least one frequency sideband about a carrier frequency of an interrogating radio frequency (RF) field. *See* limitation 1.a of claim 1, above.
[5.b] an antenna tuned to operate at 13.56 MHz;	The Galaxy S21 contains an antenna tuned to operate at 13.56 MHz. *See* limitation 1.b of claim 1, above.
[5.c] an amplifier coupled between the smartcard controller and the antenna, wherein the amplifier is coupled to be powered by the mobile device, and wherein the amplifier is coupled to amplify a signal received from the antenna and to provide an amplified signal to the smartcard controller; and	The Galaxy S21 includes an amplifier coupled between the smartcard controller and the antenna, wherein the amplifier is coupled to be powered by the mobile device, and wherein the amplifier is coupled to amplify a signal received from the antenna and to provide an amplified signal to the smartcard controller. *See* limitation 1.c of claim 1, above. The amplifier is coupled between the antenna and the smartcard controller, so as to amplify signals received at the antenna and provide an amplified signal to the smartcard controller.

Claim Language	Infringement Evidence
	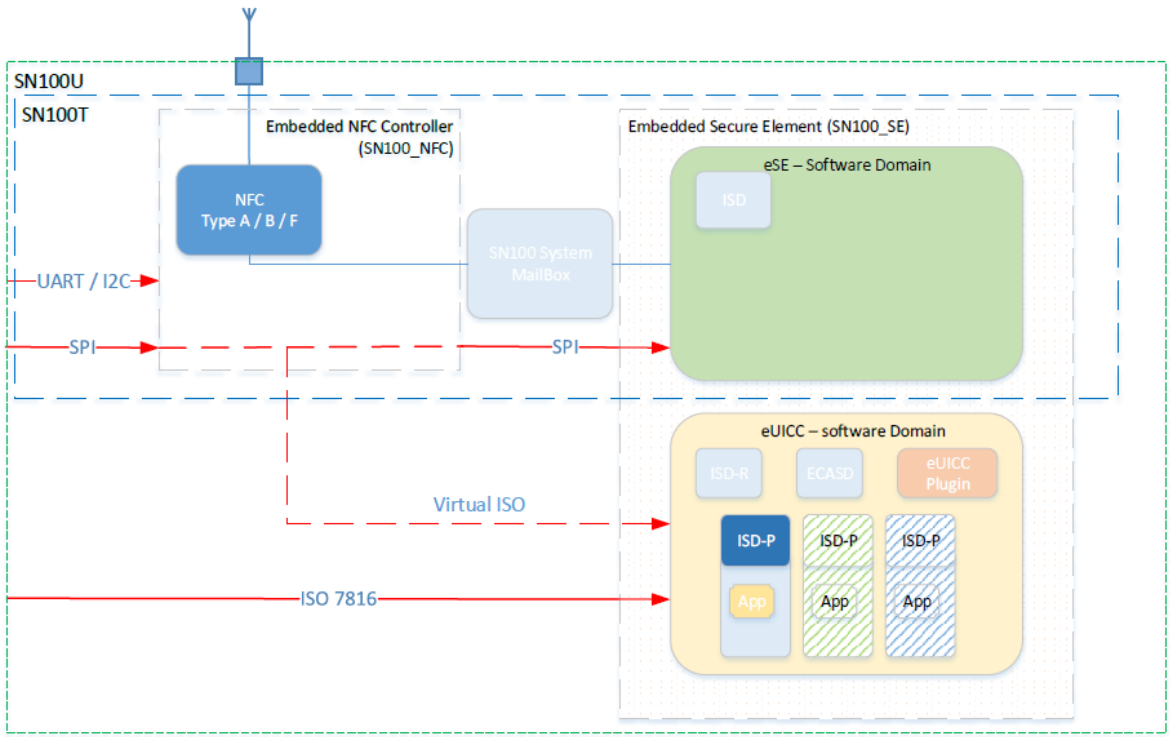 **Fig. 1.2:** SN100x Product Configurations *NXP SN100T Secure Element Specification* at 5.

Claim Language	Infringement Evidence
[5.d] a transmit circuit coupled between the smartcard controller and the antenna that in operation forms a signal that mimics the at least one frequency sideband and wherein the signal drives the antenna.	The Galaxy S21 includes a transmit circuit coupled between the smartcard controller and the antenna that in operation forms a signal that mimics the at least one frequency sideband and wherein the signal drives the antenna. *See* limitation 1.d of claim 1, above.
6. The mobile device of claim 5 wherein the antenna comprises an inductive element too small to draw enough power sufficient to operate the smartcard controller from the interrogating radio frequency (RF) field.	*See* claim 5, above. The antenna of Galaxy S21 comprises an inductive element too small to draw enough power sufficient to operate the smartcard controller from the interrogating radio frequency (RF) field. *See* claim 2, above.
7. The mobile device of claim 5 wherein the smartcard controller is coupled to be powered by the mobile device.	*See* claim 5, above. The smartcard controller of the Galaxy S21 is coupled to be powered by the mobile device. *See* claim 3, above.
8. The mobile device of claim 5 wherein the transmit circuit comprises a load modulation circuit.	*See* claim 5, above. The transmit circuit of the Galaxy S21 comprises a load modulation circuit. As described above with respect to claim 5, the SN110U chip of the Galaxy S21 contains a functional block for actively transmitting modulated data to the NFC reader for conducting the transaction.

Claim Language	Infringement Evidence
	As shown below with respect to the PN7150 chip, the NXP SN110U chip and surrounding circuitry was designed for load modulation, and particularly *active* load modulation (ALM). **2.2 Single loop antenna dedicated for Active Load Modulation** PN7150 was designed for Active Load Modulation (ALM) concept. ALM provides high performances and significant margins to NFC standard criteria. It also allows the use of smaller antenna. *PN7150 Antenna Design and Matching Guide* at 4.

Claim Language	Infringement Evidence
	ALM Mode (SINGLE): 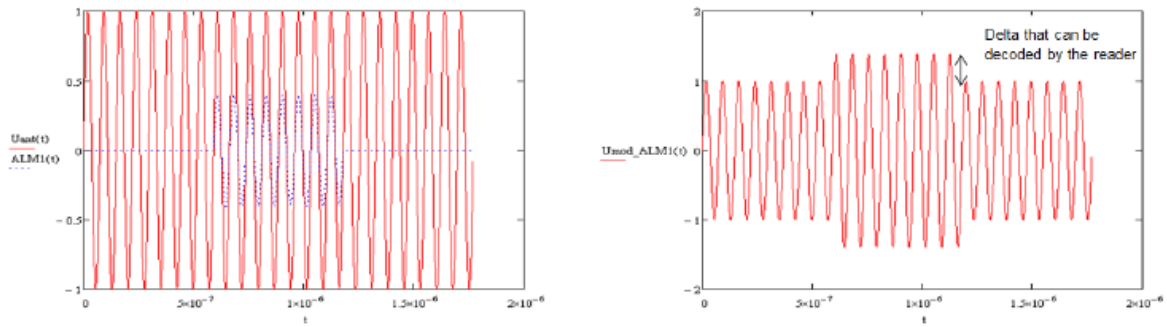 **Fig 2. ALM mode SINGLE concept** On the left graph the red 13.56MHz signal shows the voltage at the NFC antenna which is induced by the reader field, the blue curve shows the modulation pattern. This modulation pattern is generated by actively driving 13.56MHz with TX1 or TX2 while the other TX pin (TX2 or TX1) is kept silent. On the right we can see the modulated reader field. *PN7150 Antenna Design and Matching Guide* at 5.

Claim Language	Infringement Evidence
	ALM Mode (DUAL): 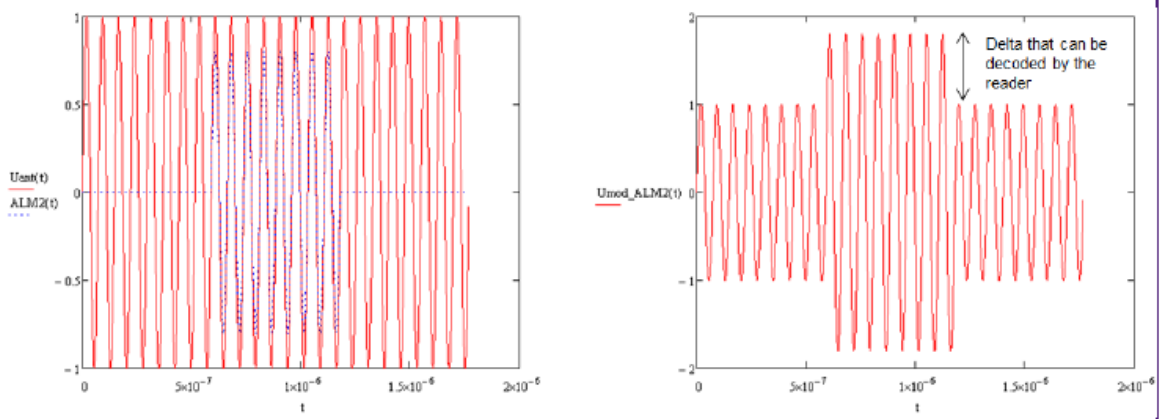 **Fig 3. ALM mode DUAL concept** In this mode the modulation pattern is generated by actively driving 13.56MHz with TX1 and TX2. The modulation depth observed is twice the modulation depth of mode 1. *PN7150 Antenna Design and Matching Guide* at 5. As shown below, the PN7150 circuitry produces a modulation signal that is driven to the antenna via TX1 and/or TX2.

Claim Language	Infringement Evidence
	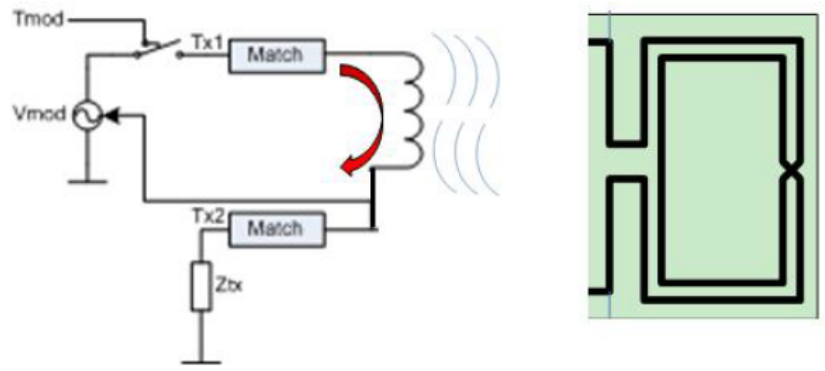 Fig 4. Single Loop Antenna concept (mode 1 illustration) *PN7150 Antenna Design and Matching Guide* at 6. 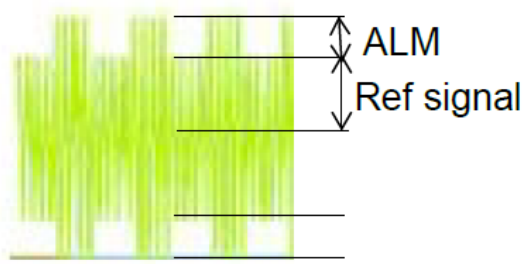 Fig 5. Load modulation illustration

Claim Language	Infringement Evidence
	PN7150 Antenna Design and Matching Guide at 6. The ALM produces upper and lower sidebands with respect to the 13.56 MHz signal. On *Fig 6* below LMA result examples are shown for Upper Side Band and Lower Side Band in the 2 modes available for PN7150 (respectively mode 1, mode 2). In order to minimize the phase error, it is necessary to limit the level of the load modulation amplitude (LMA) and to adjust the balance of the Side Bands when the field strength is low. 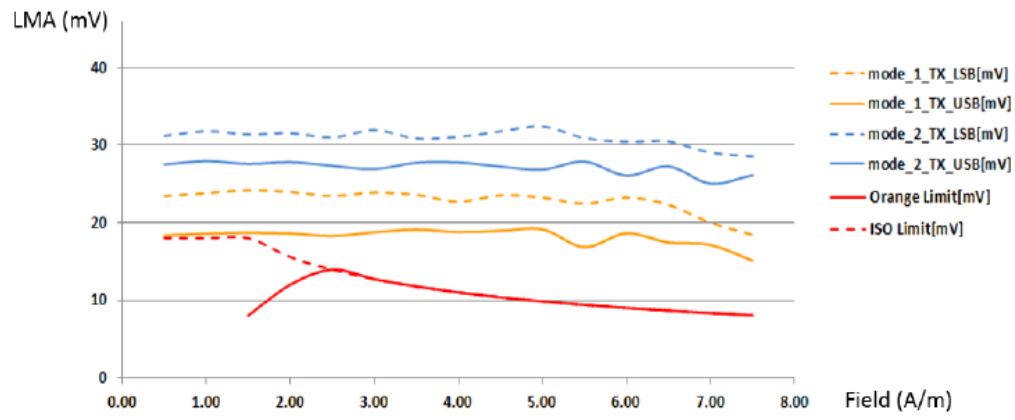 **Fig 6. Example Side Bands ISO results for modes 1, 2** *PN7150 Antenna Design and Matching Guide* at 7.

Claim Language	Infringement Evidence
	As additionally discussed with respect to claim 5, the EMVCo certification of the Galaxy S21 as an EMV Contactless Level 1 Mobile Product indicates that the Galaxy S21 has an active load modulation circuit compliant with the requirements of the EMV Level 1 Specifications for Payment Systems. The EMVCo Certification further indicates that the Galaxy S21 supports Type A and Type B communications under the ISO/IEC 14443 standard. Testing of the Galaxy S21 confirms that the SN110U chip of the Galaxy S21 employs active load modulation. As shown below in Figure 1, which displays the RF signal analysis during an ongoing transaction with an NFC reader, the Galaxy S21 emits two actively modulated sideband spikes plus the carrier frequency (13.56 MHz). This confirms the presence of the load modulation circuitry discussed above.

Claim Language	Infringement Evidence
	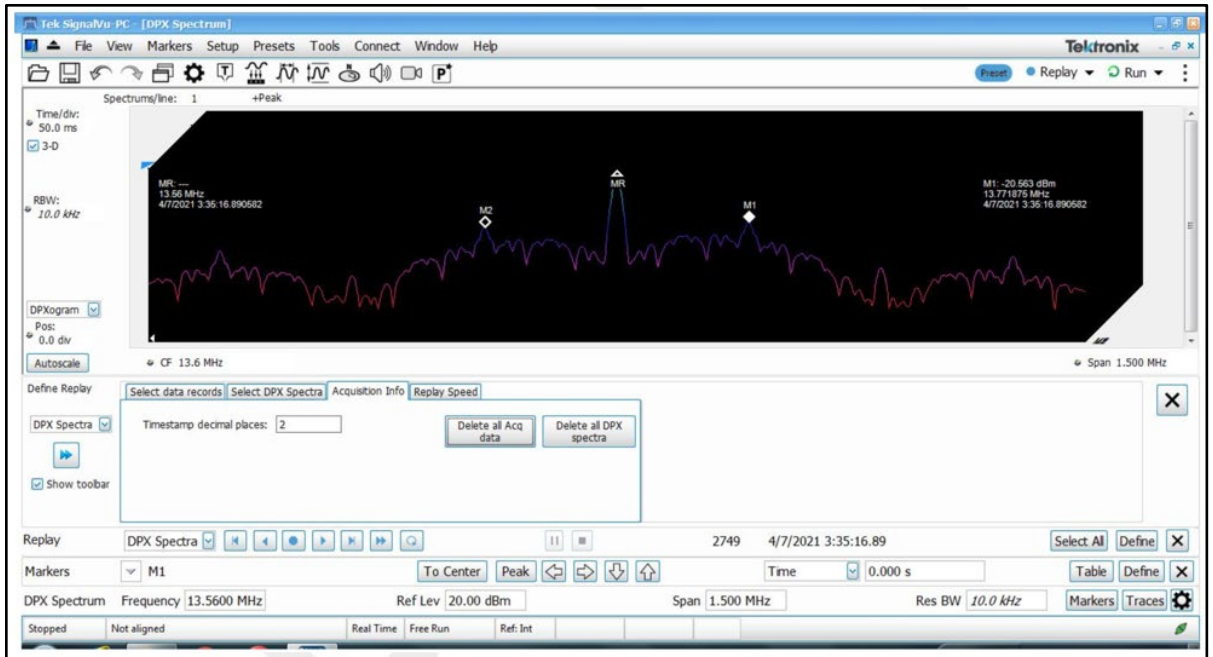 *Figure 1: Samsung Galaxy S21 5G with ongoing transaction showing actively modulated spikes of power* Figure 2 below displays the RF signal analysis of the Galaxy S21 with the Samsung Pay application enabled but with no NFC reader present. Like Figure 1, the figure shows the frequency spectrum enabled by the driver circuit consists of two actively modulated spikes (at $f_c/64$) plus the carrier frequency (13.56 MHz). Thus, Figure 2 demonstrates that the NFC transmission from the Galaxy S21 does not depend on coupling with the NFC reader and is therefore the product of an *active* load modulation circuit.

Claim Language	Infringement Evidence
	 Figure 2: Samsung Galaxy S21 5G near Square reader showing actively modulated spikes of power
9. The mobile device of claim 5 wherein the transmit circuit comprises an active transmit driver.	*See* claim 5, above. The transmit circuit of the Galaxy S21 comprises an active transmit driver. As described above with respect to claim 5, the SN110U chip of the Galaxy S21 contains a functional block for actively transmitting modulated data to the NFC reader for conducting the transaction.

Claim Language	Infringement Evidence
	As shown below with respect to the PN7150 chip, the NXP SN110U chip and surrounding circuitry was designed for load modulation, and particularly *active* load modulation (ALM). **2.2 Single loop antenna dedicated for Active Load Modulation** PN7150 was designed for Active Load Modulation (ALM) concept. ALM provides high performances and significant margins to NFC standard criteria. It also allows the use of smaller antenna. *PN7150 Antenna Design and Matching Guide* at 4.

Claim Language	Infringement Evidence
	ALM Mode (SINGLE): 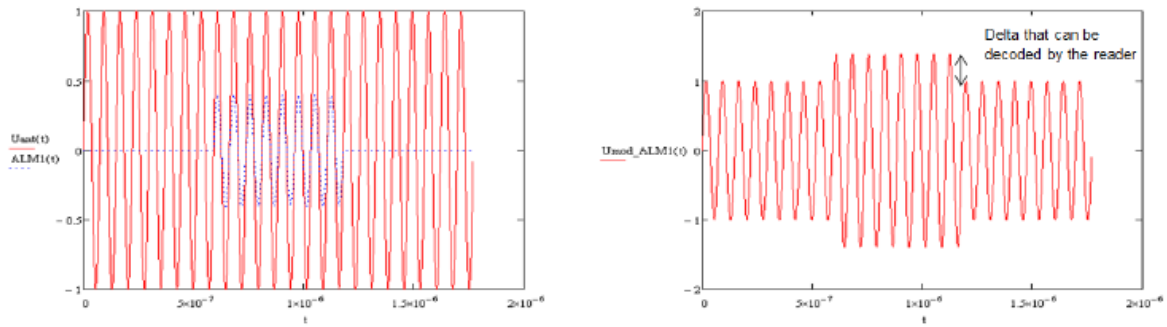 **Fig 2. ALM mode SINGLE concept** On the left graph the red 13.56MHz signal shows the voltage at the NFC antenna which is induced by the reader field, the blue curve shows the modulation pattern. This modulation pattern is generated by actively driving 13.56MHz with TX1 or TX2 while the other TX pin (TX2 or TX1) is kept silent. On the right we can see the modulated reader field. *PN7150 Antenna Design and Matching Guide* at 5.

Claim Language	Infringement Evidence
	ALM Mode (DUAL): 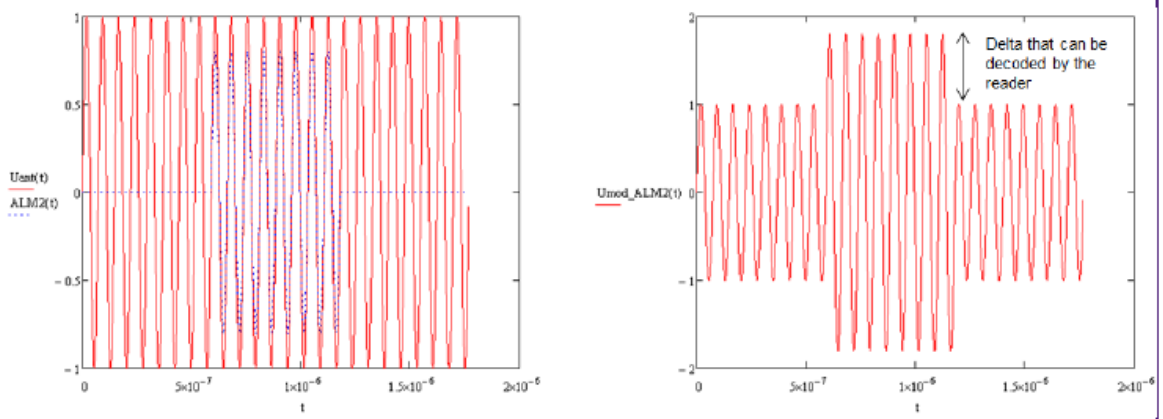 **Fig 3. ALM mode DUAL concept** In this mode the modulation pattern is generated by actively driving 13.56MHz with TX1 and TX2. The modulation depth observed is twice the modulation depth of mode 1. *PN7150 Antenna Design and Matching Guide* at 5. As shown below, the PN7150 circuitry produces a modulation signal that is driven to the antenna via TX1 and/or TX2.

Claim Language	Infringement Evidence
	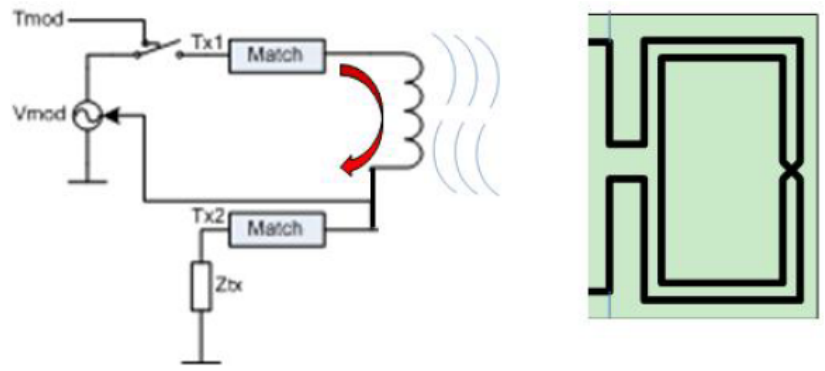 Fig 4. Single Loop Antenna concept (mode 1 illustration) *PN7150 Antenna Design and Matching Guide* at 6. 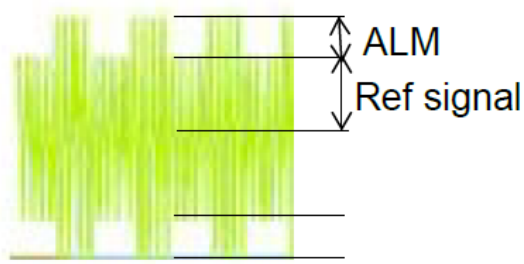 Fig 5. Load modulation illustration

Claim Language	Infringement Evidence
	PN7150 Antenna Design and Matching Guide at 6. The ALM produces upper and lower sidebands with respect to the 13.56 MHz signal. On *Fig 6* below LMA result examples are shown for Upper Side Band and Lower Side Band in the 2 modes available for PN7150 (respectively mode 1, mode 2). In order to minimize the phase error, it is necessary to limit the level of the load modulation amplitude (LMA) and to adjust the balance of the Side Bands when the field strength is low. 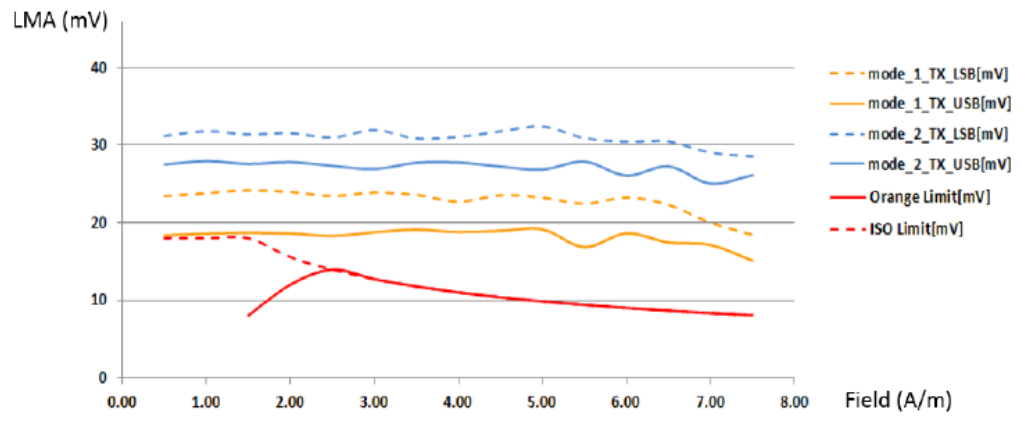 **Fig 6. Example Side Bands ISO results for modes 1, 2** *PN7150 Antenna Design and Matching Guide* at 7.

Claim Language	Infringement Evidence
	The PN7150 CIU contains both a transmitter control block, TxCtrl, and a driver block/circuits, which perform active load modulation for communication to a point-of-sale terminal.

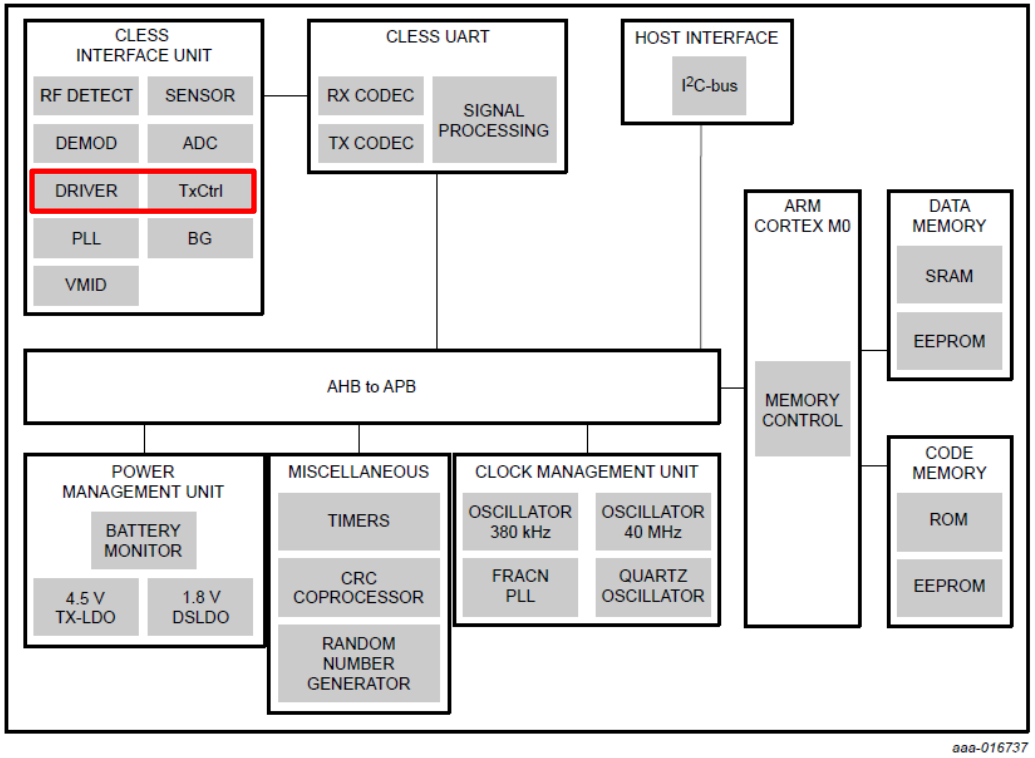

Fig 3. PN7150 block diagram

PN7150 Data Sheet at 10 (emphasis added).

Claim Language	Infringement Evidence
	The *PN5180 Data Sheet* provides additional detail regarding transmitter circuitry within NXP NFC chips like the PN5180, PN7150, and SN110U. Like the PN7150, the PN5180 also has Tx pins for driving an antenna signal along a Tx path to the NFC reader. iCashe reserves the right to modify its contentions based on non-public information learned through discovery, including, *inter alia*, any differences in functionality across the SN110U, the PN7150, and the PN5180.

Claim Language	Infringement Evidence
	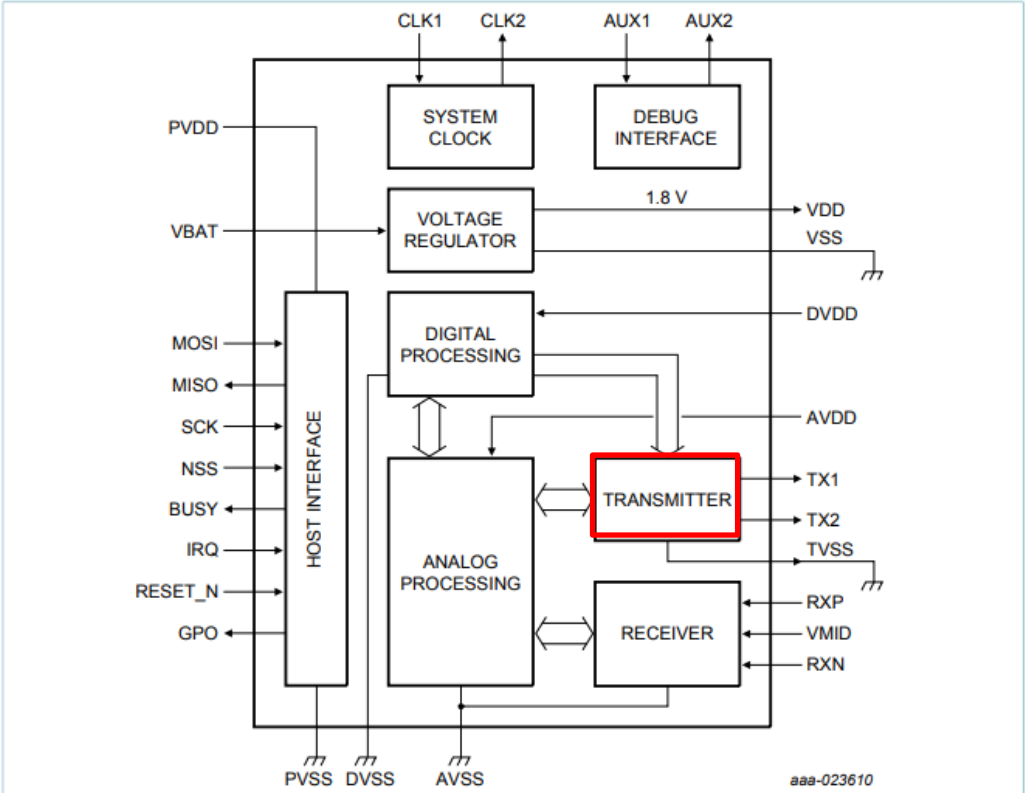 **Figure 2. PN5180 Block diagram** *PN5180 Data Sheet* at 11 (emphasis added).

Claim Language	Infringement Evidence
	Transmitter TX The transmitter is able to drive an antenna circuit connected to outputs TX1 and TX2 with a 13.56 MHz carrier signal. The signal delivered on pins TX1 and pin TX2 is the 13.56 MHz carrier modulated by an envelope signal for energy and data transmission. It can be used to drive an antenna directly, using a few passive components for matching and filtering. For a differential antenna configuration, either TX1 or TX2 can be configured to put out an inverted clock. 100 % modulation and several levels of amplitude modulation on the carrier can be performed to support 13.56 MHz carrier-based RF-reader/writer protocols as defined by standards ISO/IEC14443 type A and B, FeliCa and ISO/IEC 18092. 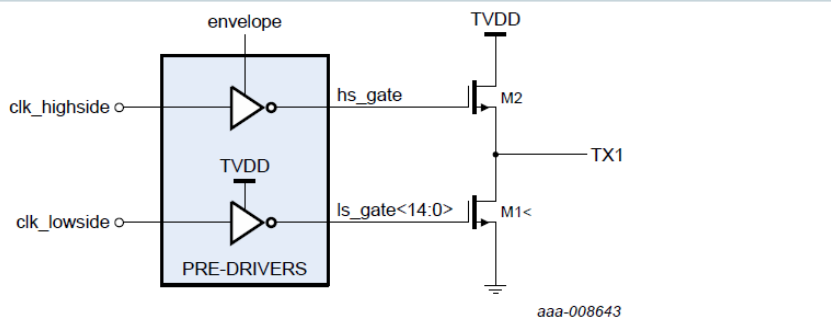 **Figure 29. PN5180 Output driver** *PN5180 Data Sheet* at 70. As additionally discussed with respect to claim 5, the EMVCo certification of the Galaxy S21 as an EMV Contactless Level 1 Mobile Product indicates that the Galaxy S21 has an active load modulation circuit compliant with the requirements of the EMV Level 1 Specifications for Payment Systems. The EMVCo Certification further indicates that the Galaxy S21 supports Type A and Type B communications under the ISO/IEC 14443 standard.

Claim Language	Infringement Evidence
	Testing of the Galaxy S21 confirms that the SN110U chip of the Galaxy S21 employs active load modulation. As shown below in Figure 1, which displays the RF signal analysis during an ongoing transaction with an NFC reader, the Galaxy S21 emits two actively modulated sideband spikes plus the carrier frequency (13.56 MHz). This confirms the presence of the load modulation circuitry discussed above. 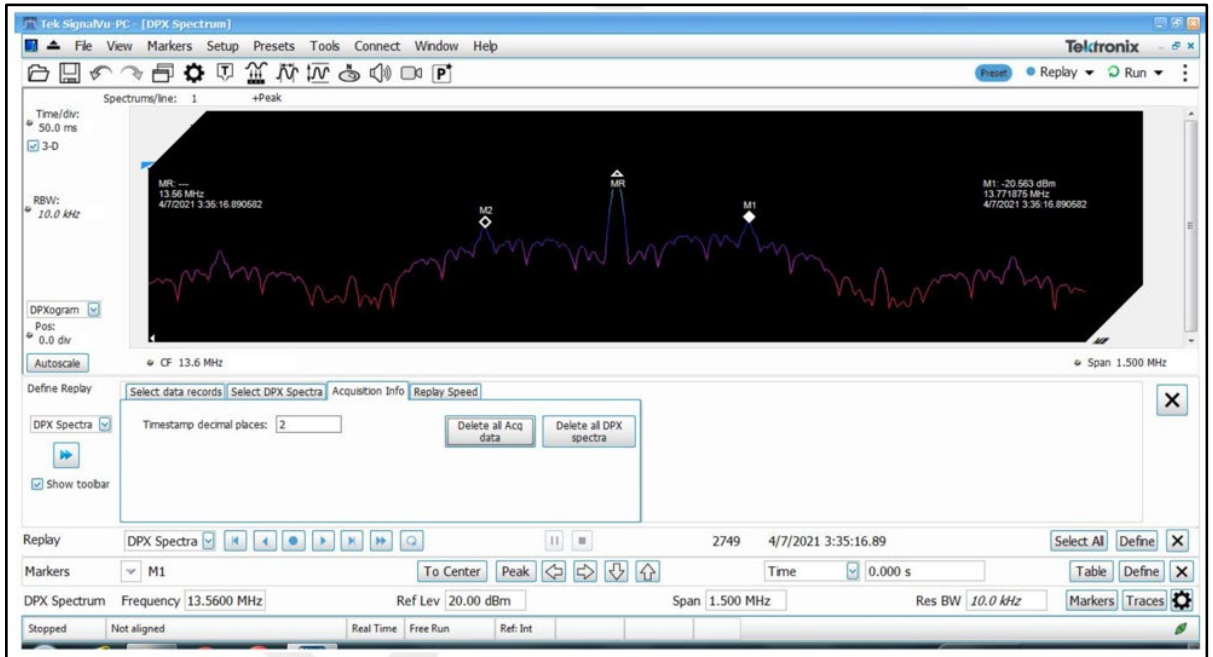 *Figure 1: Samsung Galaxy S21 5G with ongoing transaction showing actively modulated spikes of power*

Claim Language	Infringement Evidence
	Figure 2 below displays the RF signal analysis of the Galaxy S21 with the Samsung Pay application enabled but with no NFC reader present. Like Figure 1, the figure shows the frequency spectrum enabled by the driver circuit consists of two actively modulated spikes (at $f_c/64$) plus the carrier frequency (13.56 MHz). Thus, Figure 2 demonstrates that the NFC transmission from the Galaxy S21 does not depend on coupling with the NFC reader and is therefore the product of an *active* load modulation circuit (including an active transmit driver). *Figure 2: Samsung Galaxy S21 5G near Square reader showing actively modulated spikes of power*

Exhibit C
iCashe's Infringement Contentions for U.S. Patent No. 9,483,722
Samsung Galaxy S21 5G Smartphone

Claim Language	Infringement Evidence
10. The mobile device of claim 5 wherein the mobile device comprises a mobile phone.	*See* claim 5, above. The Galaxy S21 is a mobile phone. *See* claim 4, above.
11. A mobile device comprising:	The Samsung Galaxy S21 5G smartphone is a mobile device. *See* claim 1, above.
[11.a] a smartcard controller that includes load modulation circuitry for half duplex communication by creating at least one frequency sideband about a carrier frequency of an interrogating radio frequency (RF) field;	The Galaxy S21 contains a smartcard controller that includes load modulation circuitry for half duplex communication by creating at least one frequency sideband about a carrier frequency of an interrogating radio frequency (RF) field. *See* limitation 1.a of claim 1, above.
[11.b] an antenna tuned to operate at 13.56 MHz;	The Galaxy S21 contains an antenna tuned to operate at 13.56 MHz. *See* limitation 1.b of claim 1, above.
[11.c] an amplifier coupled to be powered by the mobile device, wherein the amplifier is coupled to amplify a signal received from the antenna and to provide an amplified signal to the smartcard controller; and	The Galaxy S21 includes an amplifier coupled to be powered by the mobile device, wherein the amplifier is coupled to amplify a signal received from the antenna and to provide an amplified signal to the smartcard controller. *See* limitation 1.c of claim 1, above.

Claim Language	Infringement Evidence
[11.d] an active transmit driver circuit coupled between the smartcard controller and the antenna, wherein the active transmit driver circuit is coupled to be powered by the mobile device.	The Galaxy S21 includes an active transmit driver circuit coupled between the smartcard controller and the antenna, wherein the active transmit driver circuit is coupled to be powered by the mobile device. As discussed above with respect to limitation 1.a, the SN110U chip of the Galaxy S21 has a functional block for actively transmitting modulated data to the NFC reader for conducting the transaction. *See* limitation 1.d of claim 1, above. The active transmit driver circuit is located on the NXP SN110U chip, which is coupled to the power source, i.e., the Galaxy S21 battery, to receive power. Additionally, testing demonstrates that the NFC transmission from the Galaxy S21 does not depend on coupling with the NFC reader, indicating that the SN110U chip is powered. Its power source is the battery of the Galaxy S21. *See* limitation 1.a of claim 1, above.
12. The mobile device of claim 11 wherein the antenna comprises an inductive element too small to draw enough power sufficient to operate the smartcard controller from the interrogating radio frequency (RF) field.	*See* claim 11, above. The antenna of Galaxy S21 comprises an inductive element too small to draw enough power sufficient to operate the smartcard controller from the interrogating radio frequency (RF) field. *See* claim 2, above.
13. The mobile device of claim 11 wherein the smartcard controller is coupled to be powered by the mobile device.	*See* claim 11, above. The smartcard controller of the Galaxy S21 is coupled to be powered by the mobile device. *See* claim 3, above.

Exhibit C
iCashe's Infringement Contentions for U.S. Patent No. 9,483,722
Samsung Galaxy S21 5G Smartphone

Claim Language	Infringement Evidence
14. The mobile device of claim 11 wherein the mobile device comprises a mobile phone.	*See* claim 11, above. The Galaxy S21 is a mobile phone. *See* claim 4, above.