UNITED STATES DISTRICT COURT
EASTERN DISTRICT OF TEXAS
MARSHALL DIVISION

ICASHE, INC., a Delaware corporation, Plaintiff, v. SAMSUNG ELECTRONICS CO., LTD., a Korean business entity, and SAMSUNG ELECTRONICS AMERICA, INC., a New York corporation. Defendants.	Civil Action No. 2:24cv429 **JURY TRIAL DEMANDED**

COMPLAINT FOR PATENT INFRINGEMENT

Plaintiff iCashe, Inc. ("Plaintiff" or "iCashe"), by its attorneys, hereby alleges patent infringement against Defendants Samsung Electronics Co., Ltd. ("SEC") and its U.S. subsidiary and related entity, Samsung Electronics America, Inc. ("SEA") (individually or collectively "Defendants" or "Samsung"), as follows:

INTRODUCTION

1. This is an action for patent infringement under the Patent Laws of the United States, 35 U.S.C. § 1 *et seq.* iCashe alleges that Samsung has infringed and/or continues to infringe, directly and/or indirectly, seven iCashe patents: U.S. Patent Nos. 9,122,965 ("'965 patent"), 9,483,722 ("'722 patent"), 11,694,053 ("'053 patent"),

8,403,219 ("'219 patent"), 9,202,156 ("'156 patent"), 9,208,423 ("'423 patent"), and 11,270,174 ("'174 patent") (collectively, the "iCashe Patents"), copies of which are attached hereto as Exhibits 1-7, respectively.

2. The iCashe Patents cover foundational technologies for contactless mobile payments, including: (1) the use of inventive performance-enhancement circuitry for active load modulation and/or signal amplification in near-field communications (NFC); and/or (2) the use of inventive circuitry to generate time-varying magnetic fields (TVMF) for NFC and/or to mimic the swipe of a magnetic card. The claimed inventions enable Samsung to offer superior mobile and wearable devices with NFC- and/or TVMF-based payment functionality, e.g., Samsung Pay, allowing users of such Samsung mobile and wearable devices to more easily, reliably, and efficiently complete payment transactions at a variety of point-of-sale payment terminals.

3. Samsung has infringed and/or continues to infringe the iCashe Patents, directly and indirectly, by: (1) making, using, testing, selling, offering for sale, and/or importing into the United States, mobile devices and wearable devices that include infringing NFC and/or TVMF functionality; (2) practicing the claimed methods of the iCashe Patents in the United States by making, testing, and/or using Samsung mobile devices and wearable devices that include the claimed NFC and/or TVMF functionality; and (3) at least from the date of filing of this Complaint, inducing third parties to use, sell, offer for sale, and/or import into the United States, Samsung mobile devices and wearable devices that include infringing NFC and/or TVMF functionality, with knowledge of the iCashe Patents and of the third parties' direct infringement resulting

therefrom.

4. iCashe seeks damages, including past damages, and other relief for Samsung's infringement of the iCashe Patents.

THE PARTIES

5. Plaintiff iCashe, Inc. is a corporation organized and existing under the laws of the State of Delaware, with offices at 811 SW 6th Ave., Suite 1000, Portland, Oregon 97204.

6. Defendant SEC is a corporation organized and existing under the laws of the Republic of Korea that lists its global headquarters as 129, Samsung-ro, Yeongtong-gu, Suwon-si, Gyeonggi-do, Republic of Korea.

7. Defendant SEA is a corporation organized and existing under the laws of the State of New York, with corporate offices in the Eastern District of Texas at 6625 Excellence Way, Plano, Texas 75023. Defendant SEA may be served with process through its registered agent C T Corporation System, 1999 Bryan St., Suite 900, Dallas, Texas 75201-3136.

8. Defendant SEA is a wholly owned subsidiary of SEC.

9. Defendants have authorized sellers and sales representatives that offer and sell products pertinent to this Complaint throughout the State of Texas, including in this District and to consumers throughout this District, such as: Best Buy, 422 W TX-281 Loop, Suite 100, Longview, Texas 75605; AT&T Store, 1712 E. Grand Avenue, Marshall, Texas 75670; Verizon authorized retailers, including Russell Cellular, 1111 E. Grand Avenue, Marshall, Texas 75670, and Victra, 1006 East End Boulevard N, Suite A,

Marshall, Texas 75670; and Amazon.com.

JURISDICTION AND VENUE

10. This is an action for patent infringement under the Patent Laws of the United States, 35 U.S.C. § 101 *et seq.*

11. This Court has subject matter jurisdiction pursuant to 28 U.S.C. §§ 1331 and 1338(a).

12. This Court has specific and personal jurisdiction over each of the Defendants consistent with the requirements of the Due Process Clause of the United States Constitution and the Texas Long-Arm Statute. Tex. Civ. Prac. & Rem. Code § 17.042. On information and belief, each Defendant has sufficient minimum contacts with the forum because each Defendant transacts substantial business in the State of Texas and in this District. On information and belief, SEA has more than 1,000 employees at its Plano, Texas facility, working in areas such as engineering, research and development, marketing, sales, and customer support for wireless devices. Further, each Defendant has, directly or through subsidiaries or intermediaries, committed and continues to commit acts of patent infringement in the State of Texas and in this District as alleged in this Complaint, as alleged more particularly below.

13. Venue is proper in this District pursuant to 28 U.S.C. §§ 1400(b) and 1391(b) and (c) because each Defendant is subject to personal jurisdiction in this District and has committed acts of patent infringement in this District. SEA has a regular and established place of business and employees in this District. Each Defendant, through its own acts and/or through the acts of each other Defendant, makes, uses, sells, and/or

offers to sell infringing products within this District, regularly does and solicits business in this District, and has the requisite minimum contacts with the District such that this venue is a fair and reasonable one. Further, the Defendants have admitted or not contested proper venue in this District in other patent infringement actions.

FACTUAL BACKGROUND

I. Plaintiff iCashe and the Inventors

14. The iCashe Patents relate to, among other things, circuits and systems that enable high-performance communications between mobile devices and point-of-sale payment terminals and facilitate mobile contactless payments (also commonly called "tap to" functionality), among other applications.

15. The patented inventions resulted from years of investment in research and development by iCashe, its predecessor Tyfone, Inc., and the founders of those companies, including inventors Dr. Siva Narendra and Prabhakar Tadepalli.

16. Dr. Narendra, Mr. Tadepalli, and Thomas Spitzer co-founded Tyfone in 2004 to create a secure payment platform using mobile phones. They envisioned a future in which consumers would use their phones for payments instead of cash, checks, or credit cards, for both convenience and improved security. Tyfone invested in research and development to create hardware for mobile phones to communicate effectively and securely with point-of-sale (POS) payment terminals.

17. Tyfone's innovations in mobile contactless payment hardware and systems have resulted in over 40 patents covering these technologies. Tyfone has assigned certain of those patents to iCashe, which has the responsibility to protect and license those

patents as well as carry on the mobile wallet business that originated with Tyfone.

II. The iCashe Patents

18. Plaintiff iCashe solely owns the iCashe Patents, including the exclusive rights to bring suit with respect to any past, present, and future infringement thereof.

19. The ’965 patent, entitled “13.56 MHz Enhancement Circuit for Smartcard Controller,” was duly and legally issued on September 1, 2015, from a patent application filed October 17, 2014, with Siva G. Narendra, Saurav Chakraborty, and Prabhakar Tadepalli as the named inventors. The ’965 patent claims priority to U.S. Patent Application No. 12/188,346, filed on August 8, 2008, now U.S. Patent No. 7,961,101.

20. The ’722 patent, entitled “Amplifier and Transmission Solution for 13.56MHz Radio Coupled to Smartcard Controller,” was duly and legally issued on November 1, 2016, from a patent application filed October 17, 2014, with Siva G. Narendra, Saurav Chakraborty, and Prabhakar Tadepalli as the named inventors. The ’722 patent claims priority to U.S. Patent Application No. 12/188,346, filed on August 8, 2008, now U.S. Patent No. 7,961,101.

21. The ’053 patent, entitled “Method and Apparatus for Transmitting Data via NFC for Mobile Applications Including Mobile Payments and Ticketing,” was duly and legally issued on July 4, 2023, from a patent application filed February 18, 2021, with Siva G. Narendra, Saurav Chakraborty, and Prabhakar Tadepalli as the named inventors. The ’053 patent claims priority to U.S. Patent Application No. 12/188,346, filed on August 8, 2008, now U.S. Patent No. 7,961,101.

22. The ’219 patent, entitled “Apparatus with Smartcard Circuitry Powered By

a Mobile Device," was duly and legally issued on March 26, 2013, from a patent application filed October 12, 2012, with Siva G. Narendra, Thomas N. Spitzer, and Prabhakar Tadepalli as the named inventors. The '219 patent claims priority to U.S. Patent Application No. 11/063,291, filed on February 22, 2005, now U.S. Patent No. 7,581,678.

23. The '156 patent, entitled "Mobile Device with Time-Varying Magnetic Field," was duly and legally issued on December 1, 2015, from a patent application filed June 23, 2015, with Siva G. Narendra, Thomas N. Spitzer, and Prabhakar Tadepalli as the named inventors. The '156 patent claims priority to U.S. Patent Application No. 11/063,291, filed on February 22, 2005, now U.S. Patent No. 7,581,678.

24. The '423 patent, entitled "Mobile Device with Time-Varying Magnetic Field and Single Transaction Account Numbers," was duly and legally issued on December 8, 2015, from a patent application filed August 23, 2015, with Siva G. Narendra, Thomas N. Spitzer, and Prabhakar Tadepalli as the named inventors. The '423 patent claims priority to U.S. Patent Application No. 11/063,291, filed on February 22, 2005, now U.S. Patent No. 7,581,678.

25. The '174 patent, entitled "Mobile Phone with Magnetic Card Emulation," was duly and legally issued on March 8, 2022, from a patent application filed September 15, 2020, with Siva G. Narendra, Thomas N. Spitzer, and Prabhakar Tadepalli as the named inventors. The '174 patent claims priority to U.S. Patent Application No. 11/063,291, filed on February 22, 2005, now U.S. Patent No. 7,581,678.

26. Each of the iCashe Patents is valid and enforceable.

27. Defendants are not authorized to practice the iCashe Patents.

28. The inventions recited in the iCashe Patents enable Samsung to offer, among other things, superior mobile and wearable devices with NFC- and/or TVMF-based "tap to" functionality.

III. Samsung

29. Samsung is a global leader in the mobile device and wearable device market, which includes smartphones, tablets, and smartwatches. On information and belief, Samsung designs, manufactures, uses, offers for sale, sells, and/or imports into the United States—including into the Eastern District of Texas—billions of dollars of mobile devices and wearable devices every year.

30. Samsung had global revenues of approximately $198 billion across all product lines in 2023, a significant portion of which is attributable to SEA. In 2023, SEA had revenues of approximately $29 billion, a significant portion of which is attributable to mobile devices.

IV. Samsung's Direct Infringement and the Accused Instrumentalities

31. Defendants have directly infringed, and/or continue to infringe, pursuant to 35 U.S.C. § 271(a), one or more claims of each of the iCashe Patents (as further specified below as to each of the iCashe Patents, in Counts I-VII) by: (1) making, using, testing, offering to sell, selling within the United States, and/or importing into the United States, Samsung mobile devices and/or wearable devices that include NFC- and/or TVMF-based Samsung Pay functionality; and (2) practicing the claimed methods of the iCashe Patents in the United States by using and/or testing Samsung mobile devices and/or wearable

devices that include the claimed NFC- and/or TVMF-based Samsung Pay functionality. The products that iCashe accuses of infringing the iCashe Patents are collectively referred to herein as the "Accused Instrumentalities."

32. On information and belief, SEC manufactures and tests Accused Instrumentalities abroad and sells and/or imports Accused Instrumentalities into the United States. On information and belief, SEA uses, tests, and/or sells Accused Instrumentalities in the United States and/or imports Accused Instrumentalities into the United States.

33. The Accused Instrumentalities include devices that incorporate the claimed inventions, including infringing implementations of NFC- and/or TVMF-based Samsung Pay functionality, including but not limited to:

- Samsung smartphones and tablets (collectively, "Accused Mobile Devices"), including but not limited to Galaxy Note, Galaxy S, Galaxy Z, Galaxy A, and Galaxy XCover smartphones, and Galaxy Tab tablets, including the exemplary Samsung Galaxy S21 5G smartphone and the Samsung Galaxy S20 5G smartphone;
- Samsung smartwatches and wearable devices ("Accused Wearables"), including but not limited to Galaxy smartwatches, including but not limited to Galaxy Watch Classic, Galaxy Watch, and Galaxy Watch Pro smartwatches; and
- Any additional Samsung devices that incorporate the NFC- and/or TVMF-based Samsung Pay functionality described herein.

34. The Accused Instrumentalities include products made, used, tested, offered for sale, sold within the United States, and/or imported into the United States within the last six years before the filing date of this Complaint. The Accused Instrumentalities also include products used to perform the claimed methods of the iCashe Patents within the last six years before the filing date of this Complaint.

35. The claims of the iCashe Patents relate generally to, *inter alia*, contactless mobile payments and the use of (1) inventive performance-enhancement circuitry for active load modulation and/or signal amplification in near-field communications (NFC); and/or (2) inventive circuitry to generate time-varying magnetic fields (TVMF) for NFC and/or to mimic the swipe of a magnetic card. *See, e.g.*, ’965 at 19:11-20:40; ’722 at 19:40-20:52; ’053 at 12:58-13:22; ’219 at 16:16-18:6; ’156 at 16:19-53; ’423 at 16:9-69; ’174 at 17:9-18:51. The inventions of the iCashe Patents enable Samsung to offer superior mobile and wearable devices with NFC- and/or TVMF-based Samsung Pay functionality, allowing users of such Samsung mobile and wearable devices to more easily, reliably, and efficiently complete payment transactions at a variety of point-of-sale payment terminals and at greater distances and angles than would be possible without the iCashe inventions.

36. The presence of NFC- and/or TVMF-based Samsung Pay functionality in the Accused Instrumentalities is established below with respect to the exemplary Samsung Galaxy S21 5G smartphone for certain patents and the Samsung Galaxy S20 5G smartphone for certain patents. On information and belief, all Accused Instrumentalities operate in substantially the same way as the exemplary Samsung

Galaxy S21 5G smartphone and the Samsung Galaxy S20 5G smartphone with respect to the functionality described below.

V. Samsung's Indirect Infringement

37. From at least the date of this Complaint, Defendants indirectly infringe the iCashe Patents by inducing infringement by others, such as importers, resellers, customers, and end users under 35 U.S.C. § 271(b) in this District and elsewhere in the United States and the State of Texas.

38. Specifically, Defendants induce others' direct infringement of the iCashe Patents by selling Accused Instrumentalities to third-party customers, such as retailers, who then directly infringe by using, offering to sell, selling within the United States, and/or importing into the United States those Accused Instrumentalities, which infringe the iCashe Patents.

39. On information and belief, Defendants actively promote the NFC- and/or TVMF-based Samsung Pay functionality of the Accused Instrumentalities for the U.S. market. For example, on information and belief, for every one of Defendants' Accused Instrumentalities sold in the United States, Defendants pursue and obtain approval from U.S. and state regulatory agencies, such as the United States Federal Communications Commission, to allow sales of such Accused Instrumentalities in the United States.

40. Defendants know that their customers will sell infringing Accused Instrumentalities in the United States or cause Accused Instrumentalities to be sold in the United States—or have deliberately avoided learning of the infringing circumstances so as to be willfully blind to the infringement that was induced—and Defendants

specifically intend their customers to purchase those Accused Instrumentalities from Defendants and sell the Accused Instrumentalities in the United States or cause Accused Instrumentalities to be sold in the United States. Defendants' direct and indirect purchasers directly infringe the iCashe Patents by importing such Accused Instrumentalities into the United States, selling such Accused Instrumentalities in the United States, and using such Accused Instrumentalities in the United States.

41. Defendants further induce others' direct infringement of the iCashe Patents by providing instruction and direction to end users, such as consumers, about how to use the Accused Instrumentalities such that those end users use the Accused Instrumentalities and directly infringe the iCashe Patents. Defendants have knowledge that end users will use Accused Instrumentalities in the manner directed by Defendants and specifically intend that end users will perform such uses in the United States. In some instances, such infringing uses occur upon operation of the Accused Instrumentalities in their normal, intended manner without any specific action of the end user other than turning on the product. That is, Defendants have configured the Accused Instrumentalities in such a way as to induce infringement by end users upon any use of those Accused Instrumentalities. In other instances, such infringing uses occur upon normal operation of, e.g., the Samsung Pay functionality of the Accused Instrumentalities.

42. Defendants have induced others' direct infringement despite actual notice that the Accused Instrumentalities infringe the iCashe Patents, as set forth herein. Defendants therefore have caused their purchasers and end users to directly infringe the iCashe Patents with knowledge of the iCashe Patents and specific intent that the

purchasers and end users will directly infringe, or have deliberately avoided learning of the infringing circumstances so as to be willfully blind to the infringement that was induced.

43. Defendants derive significant revenue by selling products, including the Accused Instrumentalities, to third parties who directly infringe one or more claims of the iCashe Patents.

44. The above-described acts of indirect infringement committed by Defendants have caused injury and damage to Plaintiff iCashe, and will cause additional severe and irreparable injury and damages in the future.

COUNT I: INFRINGEMENT OF U.S. PATENT NO. 9,122,965

45. The allegations set forth in paragraphs 1 through 44 of this Complaint are incorporated by reference as though fully set forth herein.

46. Pursuant to 35 U.S.C. § 282, the ’965 patent is presumed valid.

47. Defendants have directly infringed and continue to infringe one or more claims of the ’965 patent in violation of 35 U.S.C. § 271. The infringing products are the Accused Instrumentalities. The Samsung Galaxy S21 5G smartphone, described below, provides a representative example of Samsung’s infringement of the ’965 patent.

48. Paragraphs 50-77 describe the manner in which the Accused Instrumentalities infringe claims 13-15 of the ’965 patent, by way of the exemplary Samsung Galaxy S21 5G smartphone.

49. On information and belief, the Accused Instrumentalities are in relevant part substantially similar to the exemplary Samsung Galaxy S21 5G smartphone, in

particular with regard to the manner in which the Accused Instrumentalities include and utilize NFC- and/or TVMF-based functionality. Paragraphs 50-77 are thus illustrative of the manner in which each of the Accused Instrumentalities infringes.

50. The Samsung Galaxy S21 5G smartphone is a mobile device.

https://www.samsung.com/us/smartphones/galaxy-s-series/certified-re-newed-store/buy/?modelCode=SM5G991UZAAXAA (last accessed June 6, 2024).

Galaxy 5G

5G DEVICES WHAT IS 5G?

Galaxy S21 Ultra 5G

Galaxy S21+ 5G

Galaxy S21 5G

	Galaxy S21 Ultra 5G	Galaxy S21+ 5G	Galaxy S21 5G
Color	Phantom Black, Phantom Silver	Phantom Violet, Phantom Black, Phantom Silver	Phantom Pink, Phantom Violet, Phantom Gray, Phantom White
Connectivity	5G (sub6 + mmW)	5G (sub6 + mmW)	5G (sub6 + mmW)
Battery	5000mAh (typical)	4800mAh (typical)	4000mAh (typical)
Processor	Octa-Core 2.8GHz, 2.4GHz, 1.8GH	Octa-Core 2.8GHz, 2.4GHz, 1.8GHz	Octa-Core 2.8GHz, 2.4GHz, 1.8GHz

https://web.archive.org/web/20211111133651/https:/www.samsung.com/us/mobile/5g/ (last accessed June 6, 2024).

51. The Samsung Galaxy S21 5G smartphone contains a smartcard controller. In particular, at least certain models of the Samsung Galaxy S21 5G smartphone sold in the United States contain the NXP SN110U V3 NFC and Secure Element chip ("NXP SN110U"), as confirmed by the EMVCo certification letter below.

Date: November 4, 2020

Harry Lee

SAMSUNG ELECTRONICS Co., Ltd
129 Samsung-ro
Yeongtong-gu
Gyeonggi-do
Suwon-si 16677
KOREA, REPUBLIC OF

Re: ***EMVCo Letter of Approval – EMV Contactless Level 1 Mobile Product***

Approval Number:	**MTA_LOA_SAEL_02859**
Approval Date:	**November 4, 2020**
EMVCo Website Publication Date:	**January 15, 2021**
Approval Expiration Date:	**November 2, 2023**

Product Provider Name:	SAMSUNG ELECTRONICS Co., Ltd
Registration Number:	SAEL.V 14 0068
Commercial Name:	Galaxy S21 5G
Product Name:	SM-G991B/DS
Product Version:	V1

Contactless Communication Protocol:	☒ Type A ☒ Type B
Execution Environment:	☒ UICC² slot 1 ☐ UICC² slot 2 ☐ eSE ☒ HCE ☐ eUICC
Mobile Product Operating System Name and Version:	Android Version 11.0
NFC Controller Name and Version:	SN110U V3 Version N/A
NFC Controller Firmware Name and Version:	N/A Version FW01.10.5A

https://www.emvco.com/wp-content/uploads/loa/MTA_LOA_SAEL_02859_24Nov20_SHORT.pdf (last accessed June 6, 2024) ("EMVCo Certification Letter") at 2 (emphasis added).

52. The presence of the NXP SN110U chip is confirmed by teardown analysis:

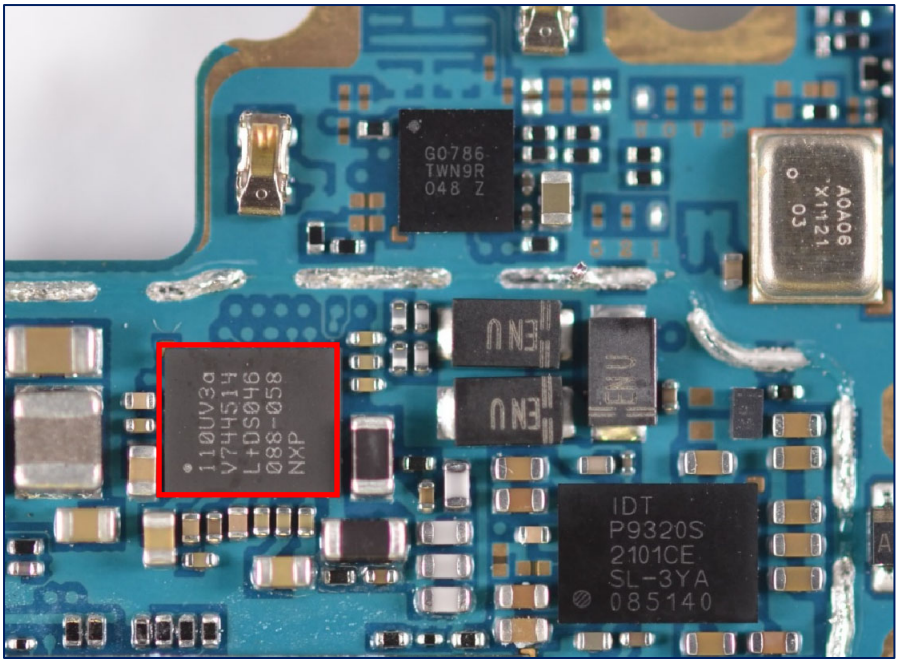

Teardown image from Samsung Galaxy S21 5G smartphone (emphasis added).

53. The NXP SN110U chip provides near-field communications functionality, enabling "tap to" functionality including NFC payment transactions.

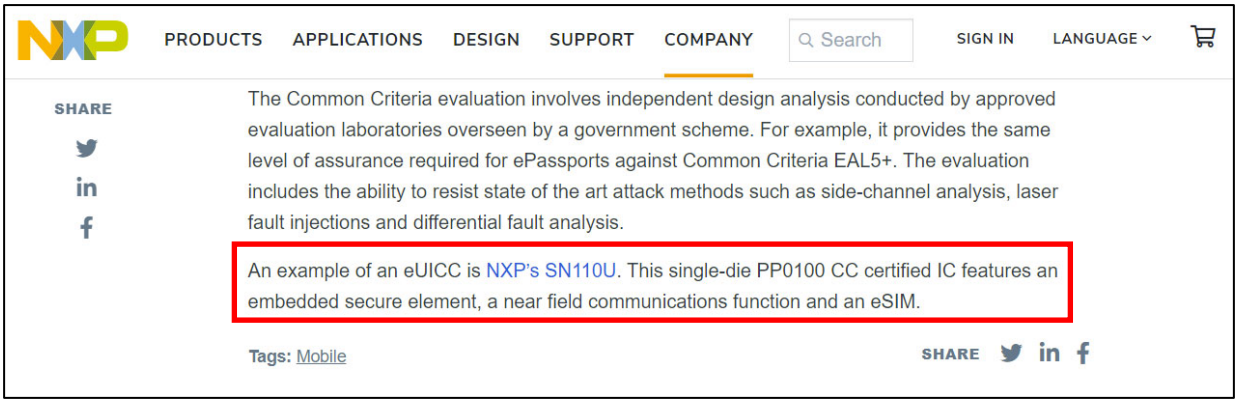

https://www.nxp.com/company/blog/imagine-never-having-to-change-a-sim-again:BL-NEVER-CHANGE-SIM-AGAIN (last accessed June 6, 2024) (emphasis added).

Near Field Communication™ CERTIFIED

SN110x Android Reference Platform

This is to certify that

NXP Semiconductors

has successfully achieved certification in the NFC Forum Certification Program indicating that their product has demonstrated its conformance to the Applicable Certification Requirements listed below.

Certification Requirements:
Certification Release 11
Test Release 11.1

Device Class: NFC Universal Device
Card emulation: T3T, T4AT, T4BT

Date certified: 2019-10-23

Certification ID: 58603

TM: The NFC Certification Mark is a worldwide trademark or registered trademark of the NFC Forum. The NFC Certification Mark may be used only in relation to products that have been certified under this program and only after the company has entered into the license agreement with the NFC Forum. The register of NFC Forum Certified products may be viewed at http://nfc-forum.org/our-work/compliance/certification-program/certification-register/

The NFC Forum Certification Program is operated by the NFC Forum.

NFC Forum Certification NXP SN110x.

54. The NFC functionality of the NXP SN110U chip in the Samsung Galaxy S21 5G smartphone can be used for, e.g., completing Samsung Pay transactions.

Use Samsung Pay

Use Samsung Pay by opening the app and holding your device over the store's card reader.

1. From Samsung Pay, select a card to pay with and authorize payments by scanning your finger or by entering your Samsung Pay PIN.
2. Hold your phone over the store's card reader.
   - When your payment is complete, a receipt is sent to your registered email.

NOTE Make sure the NFC feature is enabled on your device. For more information, see NFC and payment.

Samsung Galaxy S21 5G, Galaxy S21+ 5G, Galaxy S21 Ultra 5G User Manual (2021) ("*Galaxy S21 User Manual*") at 106-07.

NFC and payment

Near Field Communication (NFC) allows you to communicate with another device without connecting to a network. This technology is used by Android Beam and certain payment apps. The device that you are transferring to needs to support NFC, and it needs to be within four centimeters of your device.

- From Settings, tap **Connections** > **NFC and contactless payments**, and then tap to turn on this feature.

Tap and pay

Use an NFC payment app to make payments by touching your device to a compatible credit card reader.

1. From Settings, tap **Connections** > **NFC and contactless payments**, and then tap to turn on NFC.
2. Tap **Contactless payments** to see the default payment app.
   - To use another payment app, tap an available app to choose it.
   - To use a payment app that is open, tap **Pay with currently open app**.
   - To set another payment service as the default, tap **Others**, and then tap the service you prefer.

TIP NFC technology is used with **Samsung Pay**. Turn on this feature to see how easy and secure it is to use your device to make payments.

Galaxy S21 User Manual at 118.

55. The EMVCo certification of the Samsung Galaxy S21 5G smartphone as an EMV Contactless Level 1 Mobile Product indicates that the Samsung Galaxy S21 5G smartphone, including the NXP SN110U chip, supports Type A and Type B communications under the ISO/IEC 14443 standard.

Contactless Communication Protocol:	☒ Type A	☒ Type B
Execution Environment:	☒ UICC[2] slot 1 ☐ eSE ☐ eUICC	☐ UICC[2] slot 2 ☒ HCE
Mobile Product Operating System Name and Version:	Android Version 11.0	
NFC Controller Name and Version:	SN110U V3 Version N/A	
NFC Controller Firmware Name and Version:	N/A Version FW01.10.5A	

EMVCo Certification Letter at 2 (emphasis added).

56. Although NXP has not published certain information regarding the functionality or functional blocks of the NXP SN110U chip, it has published block diagrams showing the components of SN1xx family devices, including the embedded NFC controller, the embedded secure element, and the system mailbox, as shown below.

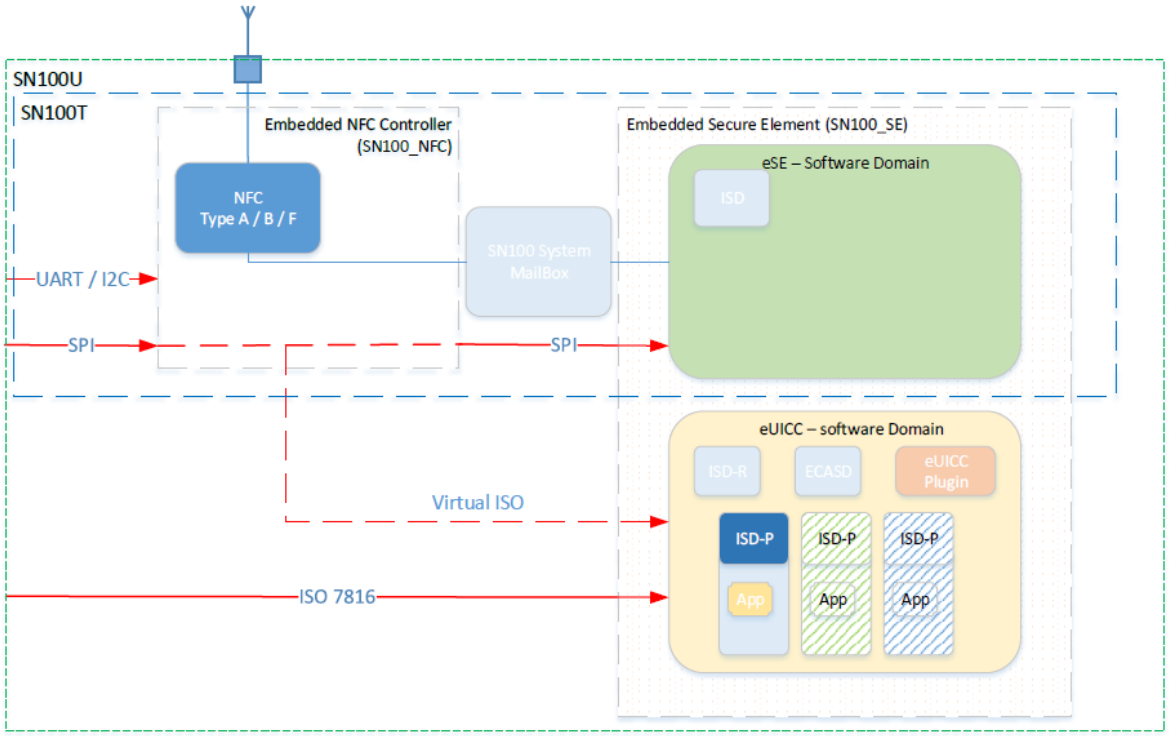

Fig. 1.2: SN100x Product Configurations

NXP SN100T – JCOP5.1 on SN100.C48 Secure Element Security Target Lite, Rev. 1.0 (Apr. 18, 2019) ("*NXP SN100T Secure Element Specification*") at 5.

57. Portions of the embedded secure element of the NXP SN110U chip form all or part of the smartcard controller within the Samsung Galaxy S21 5G smartphone. Additionally, portions of the embedded NFC controller of the NXP SN110U chip may form part of the smartcard controller within the Samsung Galaxy S21 5G smartphone.

58. Although certain information regarding the functionality or functional blocks of the SN1xx family devices is not publicly available, NXP has published detailed information about the functionality and functional blocks of other NXP NFC chips, including the PN7150. On information and belief and as detailed below, the PN7150 chip contains certain functional blocks and interfaces that are similar to some of the relevant functional blocks and interfaces of the NXP SN110U chip and surrounding circuitry in the Samsung Galaxy S21 5G smartphone.

59. Like the NXP SN110U, which is addressed in detail below, the PN7150 is a highly integrated NFC transceiver IC for contactless communication at 13.56 MHz that supports various ISO/IEC 14443 modes.

> The PN7150 is a highly integrated NFC transceiver IC for contactless communication at 13.56MHz. This transceiver IC utilizes an outstanding modulation and demodulation concept completely integrated for different kinds of contactless communication methods and protocols at 13.56 MHz.

Application Note AN11755, PN7150 Antenna Design and Matching Guide, Rev. 1.7 (July 10, 2019) ("*PN7150 Antenna Design and Matching Guide*") at 3.

> Plug´n play and high-performance full NFC solution PN7150 is a full NFC controller solution with integrated firmware and NCI interface designed for contactless communication at 13.56 MHz. It is compatible with NFC forum requirements.
>
> PN7150 is designed based on learnings from previous NXP NFC device generation. It is the ideal solution for rapidly integrating NFC technology in any application, especially those running O/S environment like Linux and Android, reducing Bill of Material (BOM) size and cost, thanks to:
>
> - Full NFC forum compliancy (see [1]) with small form factor antenna
> - Embedded NFC firmware providing all NFC protocols as pre-integrated feature
> - Direct connection to the main host or microcontroller, by I^2C-bus physical and NCI protocol
> - Ultra-low power consumption in polling loop mode
> - Highly efficient integrated power management unit (PMU) allowing direct supply from a battery
>
> PN7150 embeds a new generation RF contactless front-end supporting various transmission modes according to NFCIP-1 and NFCIP-2, ISO/IEC 14443, ISO/IEC 15693, MIFARE Classic IC-based card and FeliCa card specifications. It embeds an Arm Cortex-M0 microcontroller core loaded with the integrated firmware supporting the NCI 1.0 host communication. It also allows to provide a higher output power by supplying the transmitter output stage from 3.0 V to 4.75 V.

PN7150 High Performance NFC Controller with Integrated Firmware, Supporting All NFC Forum Modes, Product Data Sheet, Rev. 4.1 (Jan. 27, 2023) ("*PN7150 Data Sheet*") at 2.

60. Like the NXP SN110U, the PN7150 is designed to be connected to an external coil antenna.

> The PN7150 is intended to be connected to an external coil antenna through a specific matching/tuning network.
>
> The purpose of this document is first to provide some guidelines regarding the design of the NFC antenna to be connected to the PN7150.
>
> It then depicts a measurement method in order to evaluate the performances of the antenna prior to connecting it to the NXP NFC chip.
>
> The next chapter explains how to determine the matching network to be placed between a given antenna and the PN7150 (based on the antenna electrical equivalent circuit)
>
> Then, an RF performance validation procedure is proposed.
>
> Finally, an example of PN7150 antenna and tuning design is given as reference.

PN7150 Antenna Design and Matching Guide at 3.

61. Given the similarities and common functionalities across the NXP SN110U and the PN7150, and in the absence of publicly available information regarding the NXP

SN110U, detailed technical information regarding the PN7150 is set forth below and relied upon herein to demonstrate relevant functionality of the NXP SN110U and surrounding circuitry.

62. NXP provides block diagrams for the PN7150. As shown in the block diagram below, the PN7150 contains a Contactless Interface Unit (CIU). On information and belief, the NXP SN110U chip contains circuitry and functional blocks within the embedded NFC controller that correspond to certain circuitry and functional blocks within the CIU of the PN7150.

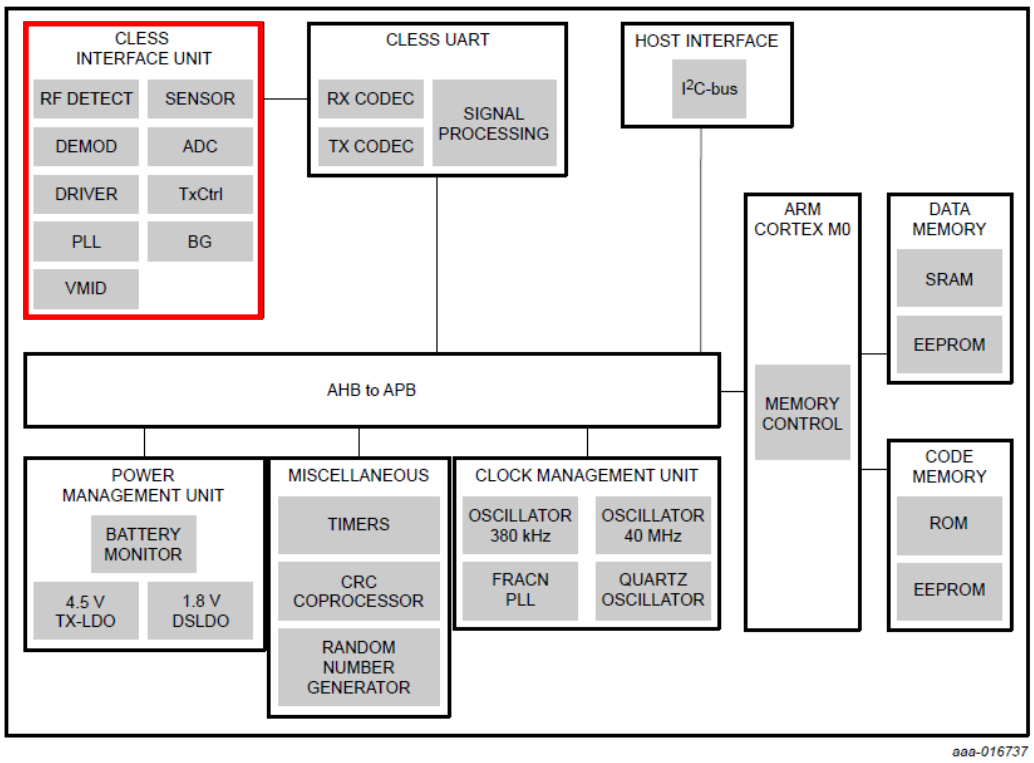

Fig 3. PN7150 block diagram

PN7150 Data Sheet at 10 (emphasis added).

63. The Samsung Galaxy S21 5G smartphone contains an antenna used to

transmit and receive NFC information and transaction sequences. The antenna is part of the NFC antenna and charging coil assembly component depicted below.

Teardown image from Samsung Galaxy S21 5G smartphone (emphasis added).

Teardown image from Samsung Galaxy S21 5G smartphone (emphasis added).

64. The antenna is tuned to operate at 13.56 MHz. As shown below, the NFC system of the Samsung Galaxy S21 5G smartphone operates at 13.56 MHz.

HCT CO.,LTD.

74, Seoicheon-ro 578beon-gil, Majang-myeon, Icheon-si, Gyeonggi-do, 17383, Rep. of KOREA
TEL: +82-31-645-6300 FAX: +82-31-645-6401

FCC NFC REPORT

Certification

Applicant Name:
SAMSUNG Electronics Co., Ltd.

Address:
129, Samsung-ro, Yeongtong-gu, Suwon-si, Gyeonggi-do, 16677, Rep. of Korea

Date of Issue:
October 29, 2020

Test Site/Location:
74, Seoicheon-ro 578beon-gil, Majang-myeon, Icheon-si, Gyeonggi-do, 17383 KOREA

Report No.: HCT-RF-2010-FC011

FCC ID:	**A3LSMG991U**
APPLICANT:	**SAMSUNG Electronics Co., Ltd.**
Model:	SM-G991U
Additional Model:	SM-G991U1
EUT Type:	Mobile Phone
RF Output Field Strength:	18.19 dBuV/m @30 m
Frequency of Operation:	13.56 MHz
Modulation type:	ASK
FCC Classification:	Low Power Communication Device – Transmitter
FCC Rule Part(s):	FCC Part 15.225 Subpart C

FCC NFC Test Report for Samsung Galaxy S21 5G Smartphone at 1 (emphasis added).

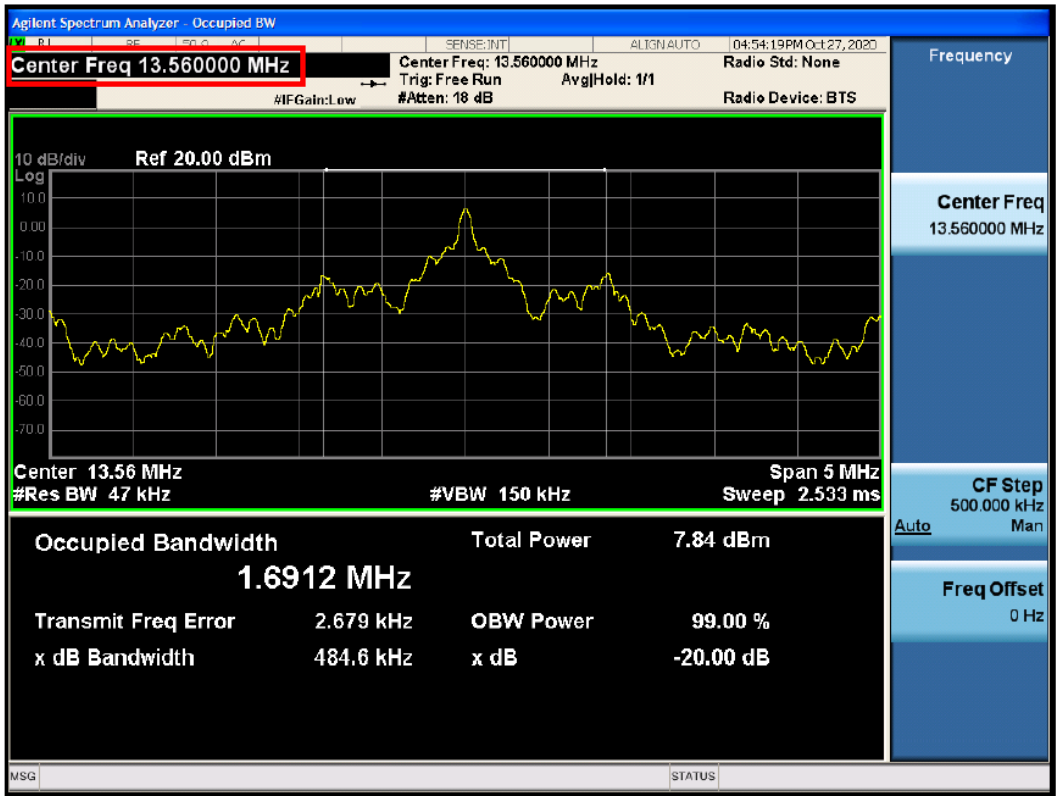

FCC NFC Test Report for Samsung Galaxy S21 5G Smartphone at 23 (emphasis added).

65. The Samsung Galaxy S21 5G smartphone includes an amplifier coupled to amplify signals received at the antenna and drive the smartcard controller. The Samsung Galaxy S21 5G smartphone is able to perform NFC payment transactions with an NFC reader both at a distance and at off-angles from the reader. An NFC payment transaction can be completed by placing the Samsung Galaxy S21 5G smartphone (and specifically its antenna) "within four centimeters" of an NFC payment terminal. This distance indicates that the received signal is necessarily amplified.

NFC and payment

Near Field Communication (NFC) allows you to communicate with another device without connecting to a network. This technology is used by Android Beam and certain payment apps. The device that you are transferring to needs to support NFC, and it needs to be within four centimeters of your device.

- From Settings, tap **Connections** > **NFC and contactless payments**, and then tap to turn on this feature.

Tap and pay

Use an NFC payment app to make payments by touching your device to a compatible credit card reader.

1. From Settings, tap **Connections** > **NFC and contactless payments**, and then tap to turn on NFC.
2. Tap **Contactless payments** to see the default payment app.
   - To use another payment app, tap an available app to choose it.
   - To use a payment app that is open, tap **Pay with currently open app**.
   - To set another payment service as the default, tap **Others**, and then tap the service you prefer.

TIP NFC technology is used with **Samsung Pay**. Turn on this feature to see how easy and secure it is to use your device to make payments.

Galaxy S21 User Manual at 118 (emphasis added).

66. The *PN7150 Antenna Design and Matching Guide* describes the manner in which the PN7150, which is substantially similar in relevant part to the SN110U, amplifies a received signal. As shown below, the *PN7150 Antenna Design and Matching Guide* depicts the receive (Rx) path between the antenna, the matching circuitry, and the NFC chip itself.

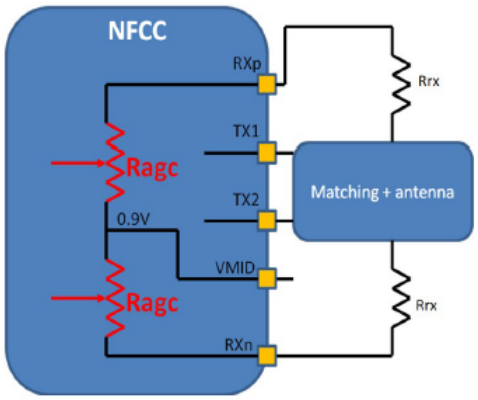

Fig 21. Rx path

PN7150 Antenna Design and Matching Guide at 22.

67. The *PN7150 Antenna Design and Matching Guide* describes setting an amplification level of a baseband amplifier (i.e., RX_GAIN) of the NFC chip to amplify a received Rx signal.

5.5.3 Configuring registers in Reader Mode for Rx path optimization

5.5.3.1 CLIF_ANA_RX_REG

a. Register definition

CLIF_ANA_RX_REG can be fine-tuned to improve the analog down-sampling and baseband amplification of the card response before it is processed by the digital block.

PN7150 Antenna Design and Matching Guide at 62.

- **[1:0]: RX_GAIN**

  Set the amplification level of the **B**ase**B**and**A**mplifier

  - Care:

    The gain must be set in combination with the HPCF parameter taking into account the optimization of the disturbances in the down-mixed RX signal.

  - Value range:

10b … 11b	High performance & sensitivity for max reading rang: Strongly depends on the SNR in the system
01b … 10b	Typical
00b	High robustness & stability but low reading range

Table 17. CLIF_ANA_RX_ REG register in reader mode

Bit	Symbol	Description
[15:4]	Internal use	Must not be modified
[3:2]	**RX_HPCF**	**Lower Corner Frequency:** **00->45kHz** **01->85kHz** **10->150kHz** **11->250kHz**
[1:0]	**RX_GAIN**	**Gain Adjustment BBA:** **00->33dB**

PN7150 Antenna Design and Matching Guide at 63.

68. The PN7150 contains an analog-to-digital converter (ADC), which receives the amplified signal and provides it to the smartcard controller.

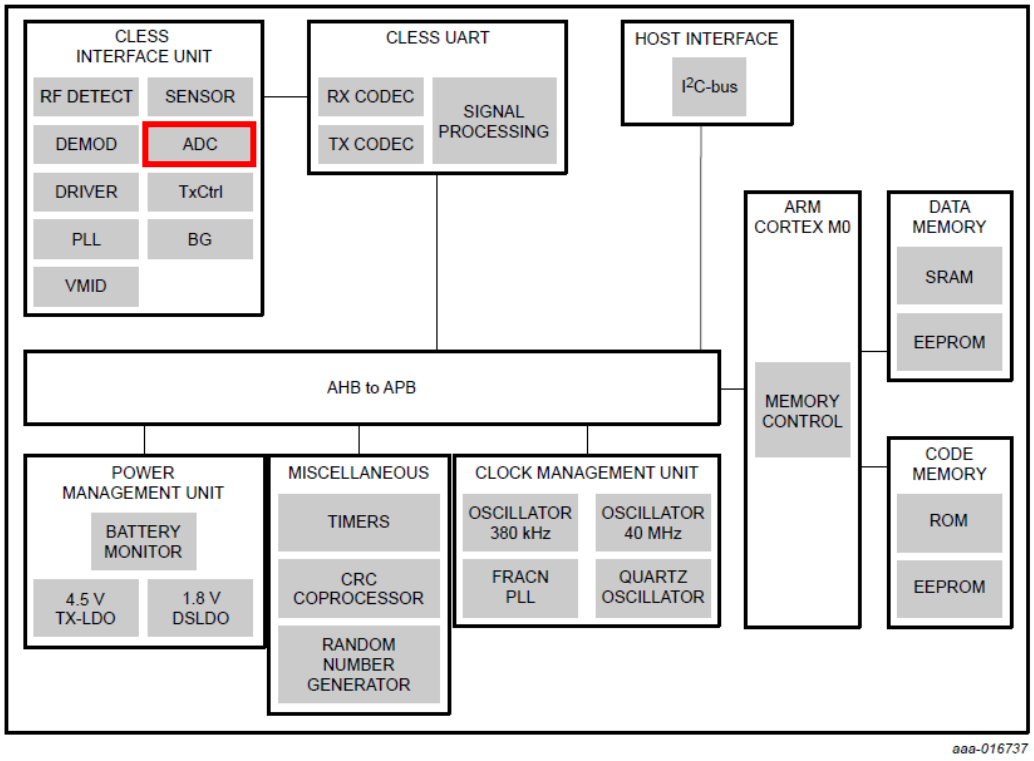

Fig 3. PN7150 block diagram

PN7150 Data Sheet at 10 (emphasis added).

69. On information and belief, the NXP SN110U chip contains functional blocks and circuitry within the embedded NFC controller that correspond to the amplifier and ADC shown and described with respect to the PN7150. The amplifier is arranged between the antenna and the smartcard controller, so as to amplify signals received at the antenna and drive the smartcard controller.

70. The Samsung Galaxy S21 5G also includes a driver circuit to drive the antenna with data provided by the smartcard controller. As shown below with respect to the PN7150, the NXP SN110U and surrounding circuitry was designed for active load modulation (ALM).

2.2 Single loop antenna dedicated for Active Load Modulation

PN7150 was designed for Active Load Modulation (ALM) concept. ALM provides high performances and significant margins to NFC standard criteria. It also allows the use of smaller antenna.

PN7150 Antenna Design and Matching Guide at 4.

ALM Mode (SINGLE):

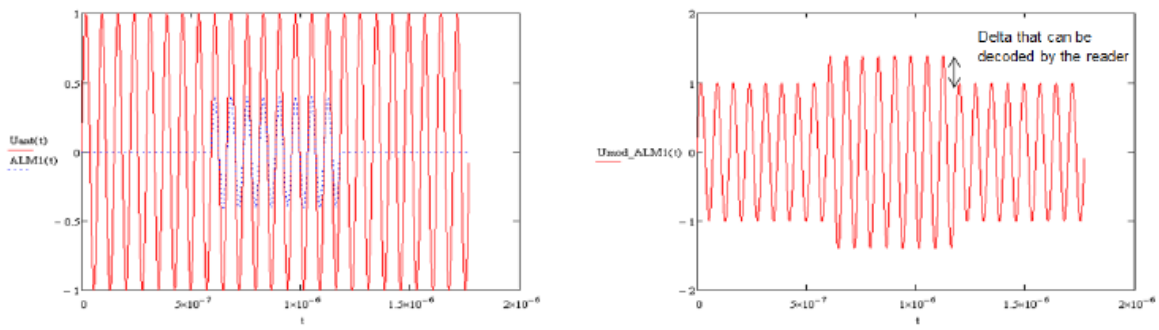

Fig 2. ALM mode SINGLE concept

On the left graph the red 13.56MHz signal shows the voltage at the NFC antenna which is induced by the reader field, the blue curve shows the modulation pattern. This modulation pattern is generated by actively driving 13.56MHz with TX1 or TX2 while the other TX pin (TX2 or TX1) is kept silent.

On the right we can see the modulated reader field.

PN7150 Antenna Design and Matching Guide at 5.

ALM Mode (DUAL):

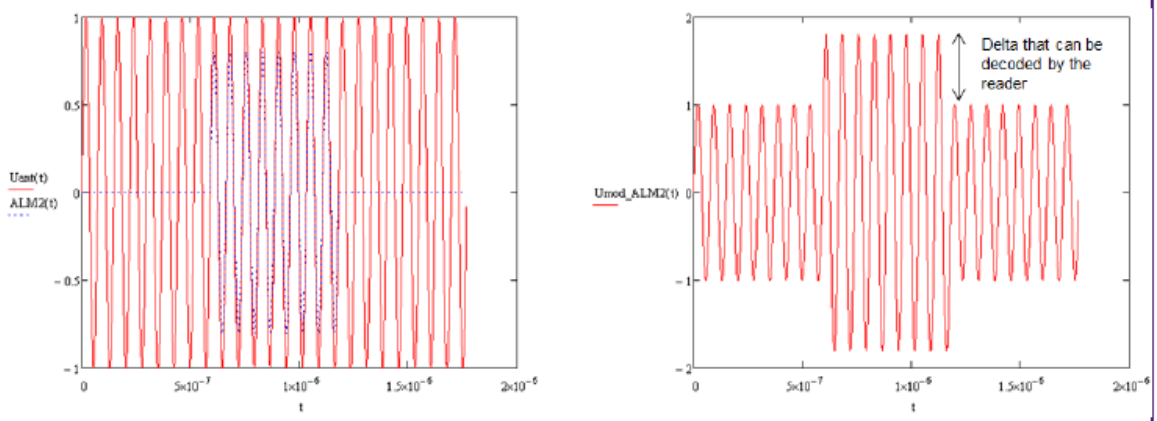

Fig 3. ALM mode DUAL concept

In this mode the modulation pattern is generated by actively driving 13.56MHz with TX1 and TX2. The modulation depth observed is twice the modulation depth of mode 1.

PN7150 Antenna Design and Matching Guide at 5.

71. As shown below, the PN7150 circuitry produces a modulation signal that is driven to the antenna via TX1 and/or TX2.

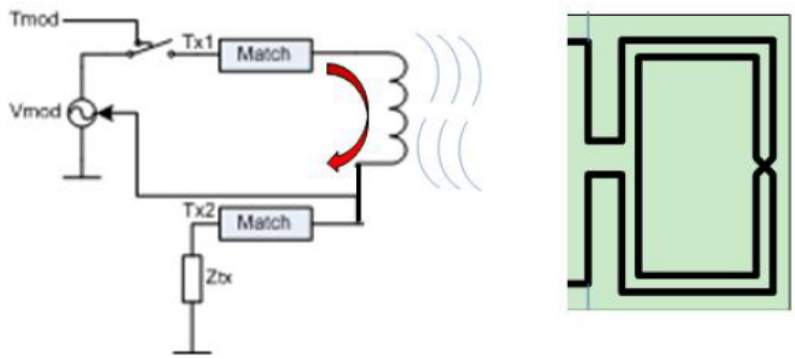

Fig 4. Single Loop Antenna concept (mode 1 illustration)

PN7150 Antenna Design and Matching Guide at 6.

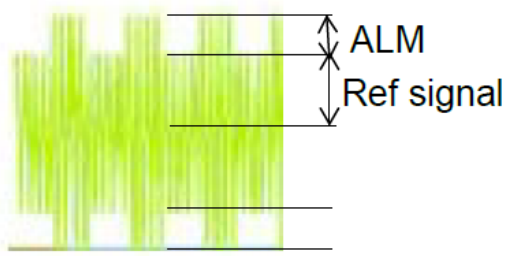

Fig 5. Load modulation illustration

PN7150 Antenna Design and Matching Guide at 6.

72. The ALM produces upper and lower side bands with respect to the 13.56 MHz signal.

On *Fig 6* below LMA result examples are shown for Upper Side Band and Lower Side Band in the 2 modes available for PN7150 (respectively mode 1, mode 2).

In order to minimize the phase error, it is necessary to limit the level of the load modulation amplitude (LMA) and to adjust the balance of the Side Bands when the field strength is low.

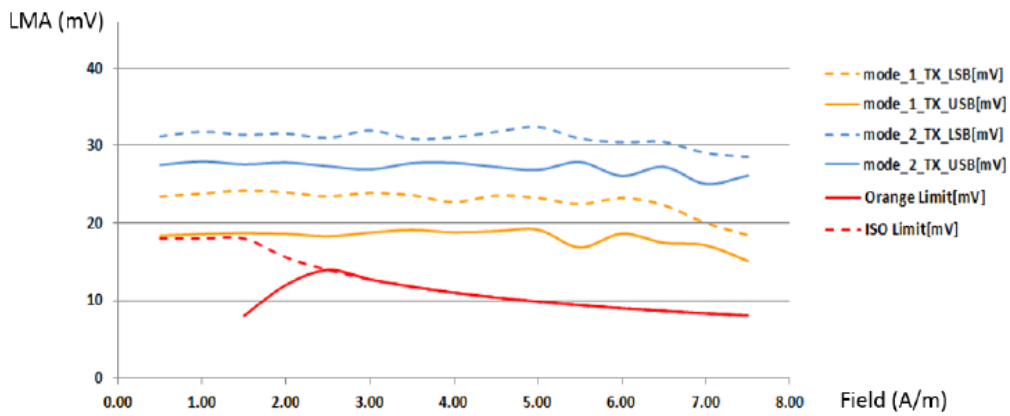

Fig 6. Example Side Bands ISO results for modes 1, 2

PN7150 Antenna Design and Matching Guide at 7.

73. As shown below, the CIU of the PN7150 contains both a transmitter control

block, TxCtrl, and driver block/circuits, which perform active load modulation for communication to a point-of-sale terminal.

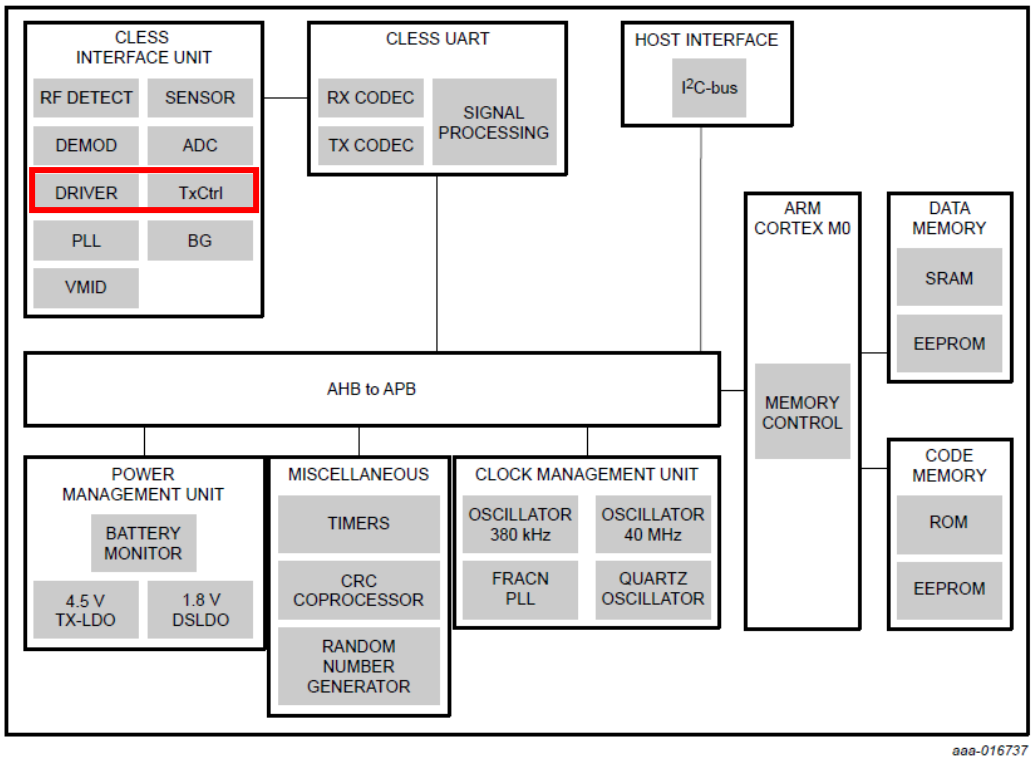

Fig 3. PN7150 block diagram

PN7150 Data Sheet at 10 (emphasis added).

74. On information and belief, the NXP SN110U contains functional blocks and circuitry within the embedded NFC controller that correspond to the active load modulation circuitry (i.e., the driver circuit) shown and described with respect to the PN7150. The driver circuit is arranged between the antenna and the smartcard controller, such that it drives the antenna with data provided by the smartcard controller.

75. Testing confirms that the Samsung Galaxy S21 5G smartphone uses active load modulation. In particular, testing of the Samsung Galaxy S21 5G smartphone

confirms that the NXP SN110U of the Samsung Galaxy S21 5G smartphone includes a driver circuit to drive the antenna with data provided by the smartcard controller. As shown below in Figure 1, which displays the RF signal analysis during an ongoing transaction with an NFC reader, the Samsung Galaxy S21 5G smartphone emits two actively modulated sideband spikes plus the carrier frequency (13.56 MHz). This confirms the presence of the load modulation circuitry (i.e., the driver circuit) discussed above.

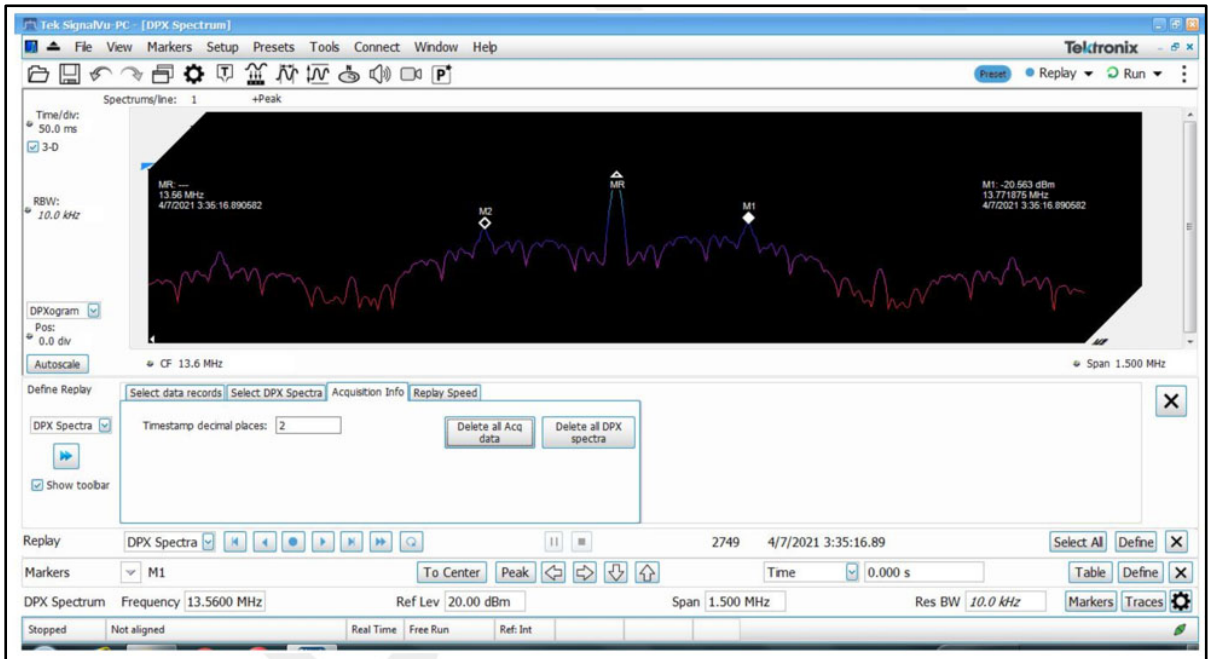

Figure 1: Samsung Galaxy S21 5G with ongoing transaction showing actively modulated spikes of power

76. Figure 2 below displays the RF signal analysis of the Samsung Galaxy S21 5G smartphone with the Samsung Pay application enabled but with no NFC reader present. Like Figure 1, the figure shows the frequency spectrum enabled by the driver circuit consists of two actively modulated spikes (at $f_c/64$) plus the carrier frequency (13.56 MHz). Thus, Figure 2 demonstrates that the NFC transmission from the Samsung

Galaxy S21 5G smartphone does not depend on coupling with the NFC reader and is therefore the product of an active load modulation circuit.

Figure 2: Samsung Galaxy S21 5G near Square reader showing actively modulated spikes of power

77. The driver circuit of the Samsung Galaxy S21 5G smartphone includes a load modulation circuit. As indicated above, the NXP SN110U chip was designed for ALM. On information and belief, the NXP SN110U contains functional blocks and circuitry within the embedded NFC controller that correspond to the active load modulation circuitry (i.e., the driver circuit) shown and described above with respect to the PN7150. The driver circuit is arranged between the antenna and the smartcard controller, such that it drives the antenna with data provided by the smartcard controller.

78. Further, the driver circuit of the Samsung Galaxy S21 5G smartphone includes an active transmit driver circuit. As described above, testing of the Samsung Galaxy S21 5G smartphone confirms that the Samsung Galaxy S21 5G smartphone uses the ALM functionality of the NXP SN110U chip for actively transmitting modulated data

to an NFC reader. In particular, the testing demonstrates that the NFC transmission from the Samsung Galaxy S21 5G smartphone does not depend on coupling with the NFC reader and is therefore the product of an active driver circuit.

79. The Accused Instrumentalities directly infringe at least claims 13-15 of the ’965 patent at least in the manner described in paragraphs 50-78 above. Plaintiff’s allegations of infringement are not limited to claims 13-15, and additional infringed claims will be identified and disclosed through discovery and infringement contentions.

80. Defendants have actual notice pursuant to 35 U.S.C. § 287(a) of the ’965 patent and the infringement alleged herein at least upon the filing of this Complaint. iCashe has complied with the notice requirement of 35 U.S.C. § 287. Neither iCashe nor any authorized licensee made, offered for sale, or sold within the United States any article embodying the ’965 patent claims following issuance of the ’965 patent.

81. Defendants indirectly infringe the ’965 patent by actively inducing the direct infringement of others of the ’965 patent, in the United States, the State of Texas, and the Eastern District of Texas.

82. Defendants induce, through affirmative acts, their customers and other third parties, such as retailers and end users, to directly infringe the ’965 patent by using, offering to sell, selling within the United States, and/or importing into the United States those Accused Instrumentalities, which infringe the ’965 patent.

83. On information and belief, Defendants actively promote the Accused Instrumentalities for the U.S. market. For example, on information and belief, for every one of Defendants’ Accused Instrumentalities sold in the United States, Defendants

pursue and obtain approval from U.S. and state regulatory agencies, such as the United States Federal Communications Commission, to allow sales of such Accused Instrumentalities in the United States.

84. Defendants know that their customers will sell infringing Accused Instrumentalities in the United States or cause Accused Instrumentalities to be sold in the United States, and Defendants specifically intend their customers to purchase those Accused Instrumentalities from Defendants and sell the Accused Instrumentalities in the United States or cause Accused Instrumentalities to be sold in the United States. Defendants' direct and indirect purchasers directly infringe the '965 patent by importing such Accused Instrumentalities into the United States, selling such Accused Instrumentalities in the United States, and using such Accused Instrumentalities in the United States.

85. Defendants further induce others' direct infringement of the '965 patent by providing instruction and direction to end users, such as consumers, about how to use the Accused Instrumentalities such that those end users use the Accused Instrumentalities and directly infringe the '965 patent. Defendants have knowledge that end users will use Accused Instrumentalities in the manner directed by Defendants and specifically intend that end users will perform such uses in the United States. Such infringing uses occur upon operation of the Accused Instrumentalities in their normal, intended manner without any specific action of the end user other than turning on the product. That is, Defendants have configured the Accused Instrumentalities in such a way as to induce infringement by end users upon any use of those Accused Instrumentalities.

86. Defendants induce others' direct infringement despite actual notice that the Accused Instrumentalities infringe the '965 patent. At least as of the date of filing of this Complaint, Defendants know that the induced conduct would constitute infringement—and intend that infringement at the time of committing the aforementioned affirmative acts, such that the acts and conduct have been and continue to be committed with the specific intent to induce infringement—or deliberately avoided learning of the infringing circumstances at the time of committing these acts so as to be willfully blind to the infringement that was induced.

87. The above-described acts of infringement committed by Defendants have caused injury and damage to iCashe, and will cause additional severe and irreparable injury and damages in the future.

88. Defendants' acts of infringement as described above are willful, at least as of the date of filing of this Complaint.

89. iCashe is entitled to recover damages sustained as a result of Defendants' wrongful acts in an amount subject to proof at trial, but in no event less than a reasonable royalty.

COUNT II: INFRINGEMENT OF U.S. PATENT NO. 9,483,722

90. The allegations set forth in paragraphs 1 through 44 of this Complaint are incorporated by reference as though fully set forth herein.

91. Pursuant to 35 U.S.C. § 282, the '722 patent is presumed valid.

92. Defendants have directly infringed and continue to infringe one or more claims of the '722 patent in violation of 35 U.S.C. § 271. The infringing products are the

Accused Instrumentalities. The Samsung Galaxy S21 5G smartphone, described below, provides a representative example of Samsung's infringement of the '722 patent.

93. Paragraphs 95-111 describe the manner in which the Accused Instrumentalities infringe claim 1 of the '722 patent, by way of the exemplary Samsung Galaxy S21 5G smartphone.

94. On information and belief, the Accused Instrumentalities are in relevant part substantially similar to the exemplary Samsung Galaxy S21 5G smartphone, in particular with regard to the manner in which the Accused Instrumentalities include and utilize NFC- and/or TVMF-based functionality. Paragraphs 95-111 are thus illustrative of the manner in which each of the Accused Instrumentalities infringes.

95. The Samsung Galaxy S21 5G smartphone is a mobile device. Paragraph 50 above is incorporated herein by reference.

96. The Samsung Galaxy S21 5G smartphone contains a smartcard controller that includes load modulation circuitry for half duplex communication by creating at least one frequency sideband about a carrier frequency of an interrogating radio frequency (RF) field. At least certain models of the Samsung Galaxy S21 5G smartphone sold in the United States contain the NXP SN110U, which includes a smartcard controller. The NXP SN110U chip provides near-field communications functionality, enabling "tap to" functionality including NFC payment transactions. Paragraphs 51-57 above are incorporated herein by reference.

97. As discussed above, although certain information regarding the functionality or functional blocks of the SN1xx family devices is not publicly available,

NXP has published detailed information about the functionality and functional blocks of other NXP NFC chips, including the PN7150. On information and belief and as detailed below, the NXP PN7150 chip contains certain functional blocks and interfaces that are similar to some of the relevant functional blocks and interfaces of the NXP SN110U chip and surrounding circuitry in the Samsung Galaxy S21 5G smartphone. Paragraphs 58-62 above are incorporated herein by reference.

98. The smartcard controller of the NXP SN110U chip includes load modulation circuitry for half duplex communication by creating at least one frequency sideband about a carrier frequency of an interrogating RF field. The NXP SN110U was designed for ALM. On information and belief, the NXP SN110U chip contains functional blocks and circuitry within the embedded NFC controller that correspond to the active load modulation circuitry shown and described with respect to the PN7150. Paragraphs 70-74 above are incorporated herein by reference.

99. Further, testing of the Samsung Galaxy S21 5G smartphone confirms that the Samsung Galaxy S21 5G smartphone uses ALM functionality of the NXP SN110U chip for actively transmitting modulated data to an NFC reader. Paragraphs 75-76 above are incorporated herein by reference.

100. As shown below, the *PN7150 Antenna Design and Matching Guide* depicts the transmit (TX) and receive (RX) paths between the TX and RX pads of the NFC chip and the antenna coil and matching circuitry. On information and belief and for the reasons discussed above, the NXP SN110U chip and surrounding circuitry, matching circuitry, and antenna coil in the Samsung Galaxy S21 5G smartphone are

configured in substantially the same manner in relevant part.

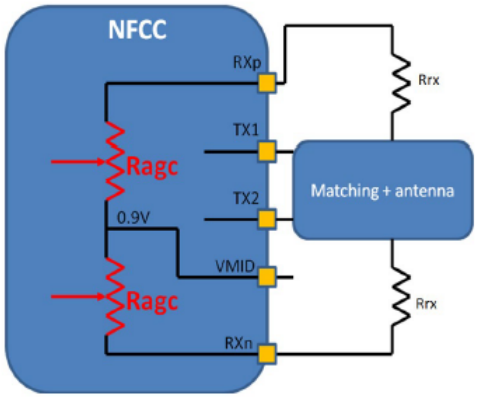

Fig 21. Rx path

PN7150 Antenna Design and Matching Guide at 22.

101. The load modulation circuitry is coupled to the TX pad(s) to form an outgoing data path. The amplifier of the NXP SN110U, discussed below, is coupled to the RX pad to form an incoming data path. The load modulation circuitry thereby provides for half duplex communication, as per the NFC, ISO/IEC 14443 standard, the communications are half-duplex, i.e., only TX or RX occurs at a given instance.

> This specification addresses the digital protocol for NFC-enabled device communication, providing an implementation specification on top of the ISO/IEC 18092 and ISO/IEC 14443 standards. It harmonizes the integrated technologies, specifies implementation options and limits the interpretation of the standards; in essence, showing developers how to use NFC, ISO/IEC 14443 and JIS X6319-4 standards together to ensure global interoperability between different NFC devices, and between NFC devices and existing contactless infrastructure.
>
> The specification defines the common feature set that can be used consistently and without further modification for major NFC applications in areas such as financial services and public transport. The specification covers the digital interface and the half-duplex transmission protocol of the NFC-enabled device in its four roles as Initiator, Target, Reader/Writer and Card Emulator. It includes bit level coding, bit rates, frame formats, protocols, and command sets, which are used by NFC-enabled devices to exchange data and bind to the LLCP protocol.

https://nfc-forum.org/build/specifications (last accessed June 6, 2024).

102. The Samsung Galaxy S21 5G smartphone contains an antenna tuned to operate at 13.56 MHz. Paragraphs 63-64 above are incorporated herein by reference.

103. The Samsung Galaxy S21 5G smartphone contains at least one active circuit coupled between the smartcard controller and the antenna, wherein the at least one active circuit includes an amplifier coupled to be powered by the mobile device, and wherein the amplifier is coupled to amplify a signal received from the antenna and to provide an amplified signal to the smartcard controller. The Samsung Galaxy S21 5G smartphone is able to perform NFC payment transactions with an NFC reader both at a distance and at off-angles from the reader. An NFC payment transaction can be completed by placing the Samsung Galaxy S21 5G smartphone (and specifically its antenna) "within four centimeters" of an NFC payment terminal. This distance indicates that the Samsung Galaxy S21 5G smartphone contains an amplifier coupled to amplify a signal received from the antenna. Paragraph 65 above is incorporated herein by reference.

104. The NXP SN110U contains an active circuit with an amplifier. On information and belief, the NXP SN110U chip contains functional blocks and circuitry within the embedded NFC controller that correspond to the amplifier and ADC shown and described with respect to the PN7150. The active circuit containing the amplifier of the NXP SN110U is arranged between the antenna and the smartcard controller, so as to amplify signals received from the antenna and provide an amplified signal to the smartcard controller. Paragraphs 66-69 above are incorporated herein by reference.

105. The amplifier of the NXP SN110U chip is coupled to be powered by the

mobile device. The amplifier is located on the NXP SN110U chip, which is coupled to the power source, i.e., the Samsung Galaxy S21 5G smartphone battery shown below, to receive power.

Teardown image from Samsung Galaxy S21 5G smartphone (emphasis added).

106. Additionally, testing indicates that the NFC transmission from the Samsung Galaxy S21 5G smartphone does not depend on coupling with the NFC reader, further indicating that the NXP SN110U chip is powered by the mobile device. Paragraphs 75-76 above are incorporated herein by reference.

107. The at least one active circuit of the Samsung Galaxy S21 5G smartphone includes a transmit circuit coupled between the smartcard controller and the antenna that in operation forms a signal that mimics the at least one frequency sideband and wherein

the signal drives the antenna. The active circuit of the NXP SN110U includes a transmit circuit coupled between the smartcard controller and the antenna.

108. As shown below, the *PN7150 Antenna Design and Matching Guide* depicts the transmit (TX) path between the TX pads of the NFC chip and the antenna coil and matching circuitry. On information and belief and for the reasons discussed above, the NXP SN110U chip and surrounding circuitry, matching circuitry, and antenna coil in the Samsung Galaxy S21 5G smartphone are configured in substantially the same manner in relevant part.

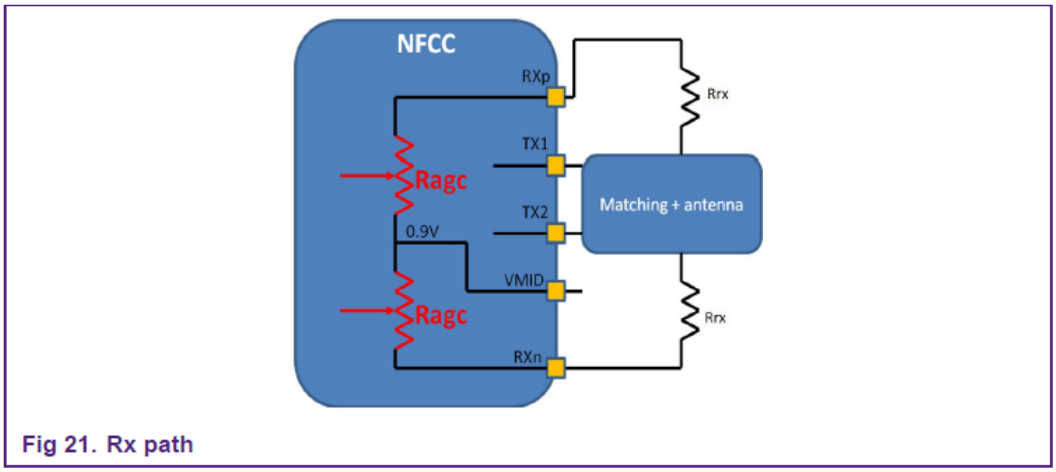

PN7150 Antenna Design and Matching Guide at 22.

109. Testing of the Samsung Galaxy S21 5G smartphone indicates that the transmit circuitry of the NXP SN110U chip forms a signal that mimics the at least one frequency sideband and drives the antenna. Figure 2 below displays an RF signal analysis of the Samsung Galaxy S21 5G smartphone with the Samsung Pay application enabled but with no NFC reader present. The figure shows the frequency spectrum enabled by the transmit circuit consists of two actively modulated sidebands plus the carrier frequency.

Figure 2: Samsung Galaxy S21 5G near Square reader showing actively modulated spikes of power

110. As discussed above, on information and belief, the NXP SN110U chip contains circuitry and functional blocks within the embedded NFC controller that correspond to certain circuitry and functional blocks within the CIU of the PN7150. As shown below with respect to the PN7150, the CIU includes driver block/circuits and a transmitter control block, TxCtrl, coupled to drive the antenna.

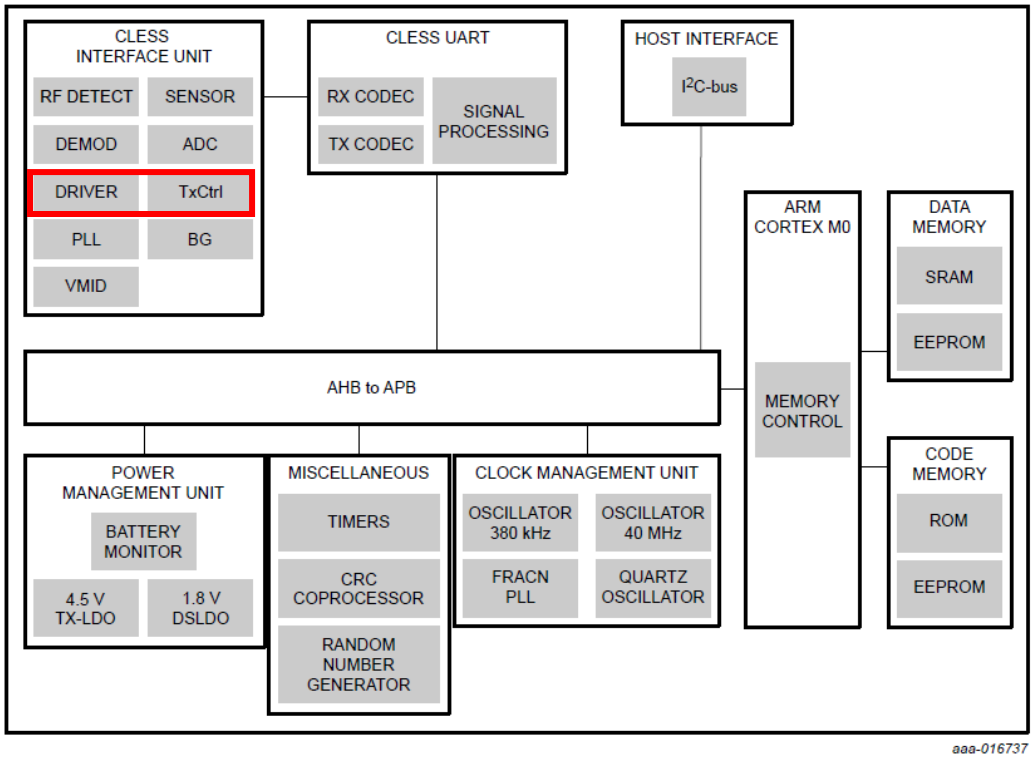

Fig 3. PN7150 block diagram

PN7150 Data Sheet at 10 (emphasis added).

111. On information and belief, the NXP SN110U chip contains functional blocks and circuitry within the embedded NFC controller that correspond to transmitter control block shown and described with respect to the PN7150. The transmit control block in the CIU is coupled between the smartcard controller and the antenna.

112. The Accused Instrumentalities directly infringe at least claim 1 of the ’722 patent at least in the manner described in paragraphs 95-111 above. Plaintiff’s allegations of infringement are not limited to claim 1, and additional infringed claims will be identified and disclosed through discovery and infringement contentions.

113. Defendants have actual notice pursuant to 35 U.S.C. § 287(a) of the ’722

patent and the infringement alleged herein at least upon the filing of this Complaint. iCashe has complied with the notice requirement of 35 U.S.C. § 287. Neither iCashe nor any authorized licensee made, offered for sale, or sold within the United States any article embodying the ’722 patent claims following issuance of the ’722 patent.

114. Defendants indirectly infringe the ’722 patent by actively inducing the direct infringement of others of the ’722 patent, in the United States, the State of Texas, and the Eastern District of Texas.

115. Defendants induce, through affirmative acts, their customers and other third parties, such as retailers and end users, to directly infringe the ’722 patent by using, offering to sell, selling within the United States, and/or importing into the United States those Accused Instrumentalities, which infringe the ’722 patent.

116. On information and belief, Defendants actively promote the Accused Instrumentalities for the U.S. market. For example, on information and belief, for every one of Defendants’ Accused Instrumentalities sold in the United States, Defendants pursue and obtain approval from U.S. and state regulatory agencies, such as the United States Federal Communications Commission, to allow sales of such Accused Instrumentalities in the United States.

117. Defendants know that their customers will sell infringing Accused Instrumentalities in the United States or cause Accused Instrumentalities to be sold in the United States, and Defendants specifically intend their customers to purchase those Accused Instrumentalities from Defendants and sell the Accused Instrumentalities in the United States or cause Accused Instrumentalities to be sold in the United States.

Defendants' direct and indirect purchasers directly infringe the '722 patent by importing such Accused Instrumentalities into the United States, selling such Accused Instrumentalities in the United States, and using such Accused Instrumentalities in the United States.

118. Defendants further induce others' direct infringement of the '722 patent by providing instruction and direction to end users, such as consumers, about how to use the Accused Instrumentalities such that those end users use the Accused Instrumentalities and directly infringe the '722 patent. Defendants have knowledge that end users will use Accused Instrumentalities in the manner directed by Defendants and specifically intend that end users will perform such uses in the United States. Such infringing uses occur upon operation of the Accused Instrumentalities in their normal, intended manner without any specific action of the end user other than turning on the product. That is, Defendants have configured the Accused Instrumentalities in such a way as to induce infringement by end users upon any use of those Accused Instrumentalities.

119. Defendants induce others' direct infringement despite actual notice that the Accused Instrumentalities infringe the '722 patent. At least as of the date of filing of this Complaint, Defendants know that the induced conduct would constitute infringement—and intend that infringement at the time of committing the aforementioned affirmative acts, such that the acts and conduct have been and continue to be committed with the specific intent to induce infringement—or deliberately avoided learning of the infringing circumstances at the time of committing these acts so as to be willfully blind to the infringement that was induced.

120. The above-described acts of infringement committed by Defendants have caused injury and damage to iCashe, and will cause additional severe and irreparable injury and damages in the future.

121. Defendants' acts of infringement as described above are willful, at least as of the date of filing of this Complaint.

122. iCashe is entitled to recover damages sustained as a result of Defendants' wrongful acts in an amount subject to proof at trial, but in no event less than a reasonable royalty.

COUNT III: INFRINGEMENT OF U.S. PATENT NO. 11,694,053

123. The allegations set forth in paragraphs 1 through 44 of this Complaint are incorporated by reference as though fully set forth herein.

124. Pursuant to 35 U.S.C. § 282, the '053 patent is presumed valid.

125. Defendants have directly infringed and continue to infringe one or more claims of the '053 patent in violation of 35 U.S.C. § 271. The infringing products are the Accused Instrumentalities. The Samsung Galaxy S21 5G smartphone, described below, provides a representative example of Samsung's infringement of the '053 patent.

126. Paragraphs 128-139 describe the manner in which the Accused Instrumentalities infringe claims 1, 7, and 8 of the '053 patent, by way of the exemplary Samsung Galaxy S21 5G smartphone.

127. On information and belief, the Accused Instrumentalities are in relevant part substantially similar to the exemplary Samsung Galaxy S21 5G smartphone, in particular with regard to the manner in which the Accused Instrumentalities include and

utilize NFC- and/or TVMF-based functionality. Paragraphs 128-139 are thus illustrative of the manner in which each of the Accused Instrumentalities infringes.

128. The Samsung Galaxy S21 5G smartphone is a mobile device. Paragraph 50 above is incorporated herein by reference.

129. The Samsung Galaxy S21 5G smartphone contains a power source. The Samsung Galaxy S21 5G smartphone battery is a power source. Paragraph 105 above is incorporated herein by reference.

130. The Samsung Galaxy S21 5G smartphone contains a smartcard controller coupled to the power source to receive power. At least certain models of the Samsung Galaxy S21 5G smartphone sold in the United States contain the NXP SN110U, which includes a smartcard controller. The NXP SN110U chip provides near-field communications functionality, enabling "tap to" functionality including NC payment transactions. Paragraphs 51-57 above are incorporated herein by reference.

131. Although certain information regarding the functionality or functional blocks of the SN1xx family devices is not publicly available, NXP has published detailed information about the functionality and functional blocks of other NXP NFC chips, including the PN7150. On information and belief and as detailed below, the PN7150 chip contains certain functional blocks and interfaces that are similar to some of the relevant functional blocks and interfaces of the NXP SN110U chip and surrounding circuitry in the Samsung Galaxy S21 5G smartphone. Paragraphs 58-62 above are incorporated herein by reference.

132. The NXP SN110U chip is coupled to the power source, i.e., the Samsung

Galaxy S21 5G smartphone battery, to receive power. Additionally, testing indicates that the NFC transmission from the Samsung Galaxy S21 5G smartphone does not depend on coupling with the NFC reader, further indicating that the NXP SN110U chip is powered by the mobile device. Paragraphs 75-76 above are incorporated herein by reference.

133. The Samsung Galaxy S21 5G smartphone contains an antenna tuned to operate at substantially 13.56 MHz, wherein the antenna interacts with a Near Field Communication (NFC) reader external to the mobile device. The antenna of the Samsung Galaxy S21 5G smartphone, which is part of the NFC antenna and charging coil assembly component, interacts with an NFC reader external to the mobile device during transactions, e.g., Samsung Pay transactions. Paragraphs 63-64 above are incorporated herein by reference.

134. The Samsung Galaxy S21 5G smartphone contains an active transmit driver circuit coupled to the power source to receive the power, wherein the active transmit driver circuit affects transmission of data between the antenna and the NFC reader. The NXP SN110U contains an active transmit driver circuit. The NXP SN110U was designed for ALM. On information and belief, the NXP SN110U chip contains functional blocks and circuitry within the embedded NFC controller that correspond to the active load modulation circuitry shown and described above with respect to the PN7150. Paragraphs 70-74 above are incorporated herein by reference.

135. Further, testing of the Samsung Galaxy S21 5G smartphone confirms that the Samsung Galaxy S21 5G smartphone uses ALM functionality of the NXP SN110U chip for actively transmitting modulated data to an NFC reader. Paragraphs 75-76 above

are incorporated herein by reference.

136. The active transmit driver circuit of the NXP SN110U chip affects NFC data transmission during, e.g., Samsung Pay transactions, through ALM. The active transmit driver circuit is located on the NXP SN110U chip, which is coupled to the power source to receive power, as described above.

137. The Samsung Galaxy S21 5G smartphone contains an amplifier coupled to the power source to receive the power, wherein the amplifier is further coupled to the antenna. The Samsung Galaxy S21 5G smartphone is able to perform NFC payment transactions with an NFC reader both at a distance and at off-angles from the reader. An NFC payment transaction can be completed by placing the Samsung Galaxy S21 5G smartphone (and specifically its antenna) "within four centimeters" of an NFC payment terminal. This distance indicates that the Samsung Galaxy S21 5G smartphone contains an amplifier coupled to amplify a signal received from the antenna. Paragraph 65 above is incorporated herein by reference.

138. The amplifier is located on the NXP SN110U chip. On information and belief, the NXP SN110U chip contains functional blocks and circuitry within the embedded NFC controller that correspond to the amplifier and ADC shown and described with respect to the PN7150. Paragraphs 66-69 above are incorporated herein by reference. The NXP SN110U chip is coupled to the power source to receive power, as discussed above.

139. The amplifier in the Samsung Galaxy S21 5G smartphone amplifies a signal received at the antenna and generates an amplified signal, and provides the

amplified signal to the smartcard controller. The amplifier of the NXP SN110U is arranged between the antenna and the smartcard controller, so as to amplify signals received at the antenna, generate an amplified signal, and provide the amplified signal to the smartcard controller. Paragraphs 66-69 above are incorporated herein by reference.

140. The Accused Instrumentalities directly infringe at least claims 1, 7, and 8 of the ’053 patent at least in the manner described in paragraphs 128-139 above. Plaintiff’s allegations of infringement are not limited to claims 1, 7, and 8, and additional infringed claims will be identified and disclosed through discovery and infringement contentions.

141. Defendants have actual notice pursuant to 35 U.S.C. § 287(a) of the ’053 patent and the infringement alleged herein at least upon the filing of this Complaint. iCashe has complied with the notice requirement of 35 U.S.C. § 287. Neither iCashe nor any authorized licensee made, offered for sale, or sold within the United States any article embodying the ’053 patent claims following issuance of the ’053 patent.

142. Defendants indirectly infringe the ’053 patent by actively inducing the direct infringement of others of the ’053 patent, in the United States, the State of Texas, and the Eastern District of Texas.

143. Defendants induce, through affirmative acts, their customers and other third parties, such as retailers and end users, to directly infringe the ’053 patent by using, offering to sell, selling within the United States, and/or importing into the United States those Accused Instrumentalities, which infringe the ’053 patent.

144. On information and belief, Defendants actively promote the Accused Instrumentalities for the U.S. market. For example, on information and belief, for every

one of Defendants' Accused Instrumentalities sold in the United States, Defendants pursue and obtain approval from U.S. and state regulatory agencies, such as the United States Federal Communications Commission, to allow sales of such Accused Instrumentalities in the United States.

145. Defendants know that their customers will sell infringing Accused Instrumentalities in the United States or cause Accused Instrumentalities to be sold in the United States, and Defendants specifically intend their customers to purchase those Accused Instrumentalities from Defendants and sell the Accused Instrumentalities in the United States or cause Accused Instrumentalities to be sold in the United States. Defendants' direct and indirect purchasers directly infringe the '053 patent by importing such Accused Instrumentalities into the United States, selling such Accused Instrumentalities in the United States, and using such Accused Instrumentalities in the United States.

146. Defendants further induce others' direct infringement of the '053 patent by providing instruction and direction to end users, such as consumers, about how to use the Accused Instrumentalities such that those end users use the Accused Instrumentalities and directly infringe the '053 patent. Defendants have knowledge that end users will use Accused Instrumentalities in the manner directed by Defendants and specifically intend that end users will perform such uses in the United States. Such infringing uses occur upon normal operation of, e.g., the Samsung Pay functionality, of the Accused Instrumentalities.

147. Defendants induce others' direct infringement despite actual notice that the

Accused Instrumentalities infringe the ’053 patent. At least as of the date of filing of this Complaint, Defendants know that the induced conduct would constitute infringement—and intend that infringement at the time of committing the aforementioned affirmative acts, such that the acts and conduct have been and continue to be committed with the specific intent to induce infringement—or deliberately avoided learning of the infringing circumstances at the time of committing these acts so as to be willfully blind to the infringement that was induced.

148. The above-described acts of infringement committed by Defendants have caused injury and damage to iCashe, and will cause additional severe and irreparable injury and damages in the future.

149. Defendants’ acts of infringement as described above are willful, at least as of the date of filing of this Complaint.

150. iCashe is entitled to recover damages sustained as a result of Defendants’ wrongful acts in an amount subject to proof at trial, but in no event less than a reasonable royalty.

COUNT IV: INFRINGEMENT OF U.S. PATENT NO. 8,403,219

151. The allegations set forth in paragraphs 1 through 44 of this Complaint are incorporated by reference as though fully set forth herein.

152. Pursuant to 35 U.S.C. § 282, the ’219 patent is presumed valid.

153. Defendants have directly infringed and continue to infringe one or more claims of the ’219 patent in violation of 35 U.S.C. § 271. The infringing products are the Accused Instrumentalities. The Samsung Galaxy S21 5G smartphone, described below,

provides a representative example of Samsung's infringement of the '219 patent.

154. Paragraphs 156-167 describe the manner in which the Accused Instrumentalities infringe claims 1 and 2 of the '219 patent, by way of the exemplary Samsung Galaxy S21 5G smartphone.

155. On information and belief, the Accused Instrumentalities are in relevant part substantially similar to the exemplary Samsung Galaxy S21 5G smartphone, in particular with regard to the manner in which the Accused Instrumentalities include and utilize NFC- and/or TVMF-based functionality. Paragraphs 156-167 are thus illustrative of the manner in which each of the Accused Instrumentalities infringes.

156. The Samsung Galaxy S21 5G smartphone contains an apparatus with a compatible interface in a mobile phone. The Samsung Galaxy S21 5G smartphone is a mobile phone. At least certain models of the Samsung Galaxy S21 5G smartphone sold in the United States contain an apparatus including the NXP SN110U chip and associated antenna. Paragraphs 50-52 above are incorporated herein by reference.

157. The NXP SN110U chip and associated antenna in the Samsung Galaxy S21 5G smartphone includes smartcard circuitry accessible by the mobile phone. The NXP SN110U chip has smartcard circuitry for providing near-field communications functionality, enabling "tap to" functionality including "tap to pay" NFC payment transactions. The NFC functionality of the NXP SN110U chip in the Samsung Galaxy S21 5G smartphone can be used for, e.g., completing Samsung Pay transactions. The smartcard circuitry is thus accessible by the Samsung Galaxy S21 5G smartphone. Paragraphs 53-57 above are incorporated herein by reference.

158. Although certain information regarding the functionality or functional blocks of the SN1xx family devices is not publicly available, NXP has published detailed information about the functionality and functional blocks of other NXP NFC chips, including the PN7150. On information and belief and as detailed below, the PN7150 chip contains certain functional blocks and interfaces that are similar to some of the relevant functional blocks and interfaces of the NXP SN110U chip and surrounding circuitry in the Samsung Galaxy S21 5G smartphone. Paragraphs 58-62 above are incorporated herein by reference.

159. The smartcard circuitry and associated antenna in the Samsung Galaxy S21 5G smartphone include a point-of-sale interface to communicate with a point-of-sale terminal. The circuitry of the NXP SN110U chip, including the embedded NFC controller and its functional blocks and circuitry, as well as the embedded secure element, has smartcard circuitry that performs various signal amplification and load modulation functions that provide for communication with a point-of-sale terminal.

160. The smartcard circuitry includes a functional block for amplification. The Samsung Galaxy S21 5G smartphone is able to perform NFC payment transactions with an NFC reader both at a distance and at off-angles from the reader. An NFC payment transaction can be completed by placing the Samsung Galaxy S21 5G smartphone (and specifically its antenna) "within four centimeters" of a point-of-sale terminal, such as an NFC payment terminal. This distance indicates that the Samsung Galaxy S21 5G smartphone contains an amplifier coupled to amplify a signal received from the antenna. Paragraph 65 above is incorporated herein by reference.

161. Additionally, on information and belief, the NXP SN110U chip contains functional blocks and circuitry within the embedded NFC controller that correspond to the amplifier and ADC shown and described with respect to the PN7150. The amplifier of the NXP SN110U is arranged between the antenna and the smartcard controller, so as to amplify signals received at the antenna and drive the smartcard controller. Paragraphs 66-69 above are incorporated herein by reference.

162. The smartcard circuitry also includes a functional block for load modulation. The NXP SN110U was designed for ALM. On information and belief, the NXP SN110U chip contains functional blocks and circuitry within the embedded NFC controller that correspond to the active load modulation circuitry shown and described above with respect to the PN7150. Paragraphs 70-74 above are incorporated herein by reference.

163. Further, testing of the Samsung Galaxy S21 5G smartphone confirms that the Samsung Galaxy S21 5G smartphone uses ALM functionality of the NXP SN110U chip for actively transmitting modulated data to an NFC reader. Paragraphs 75-76 above are incorporated herein by reference.

164. The point-of-sale interface in the Samsung Galaxy S21 5G smartphone receives power from the mobile phone. The Samsung Galaxy S21 5G smartphone contains a battery, which is a power source. Paragraph 105 above is incorporated herein by reference.

165. The NXP SN110U chip is coupled to the battery such that the point-of-sale interface in the NXP SN110U receives power from the mobile phone. Testing indicates

that the NFC transmission from the Samsung Galaxy S21 5G smartphone does not depend on coupling with the NFC reader, indicating that the NXP SN110U chip is powered by the mobile device. Paragraphs 75-76 above are incorporated herein by reference.

166. The point-of-sale interface in the Samsung Galaxy S21 5G smartphone comprises circuitry to produce at least one time-varying magnetic field. The Samsung Galaxy S21 5G smartphone contains an antenna tuned to operate at substantially 13.56 MHz. Paragraphs 63-64 above are incorporated herein by reference.

167. The antenna produces a time-varying magnetic field, i.e., a 13.56 MHz alternating current. The signal transmitted over the antenna is modulated and driven by circuitry of the NXP SN110U chip. This modulation pattern is generated by actively driving a signal over the TX pin(s). Paragraphs 70-76 above are incorporated herein by reference.

ALM Mode (SINGLE):

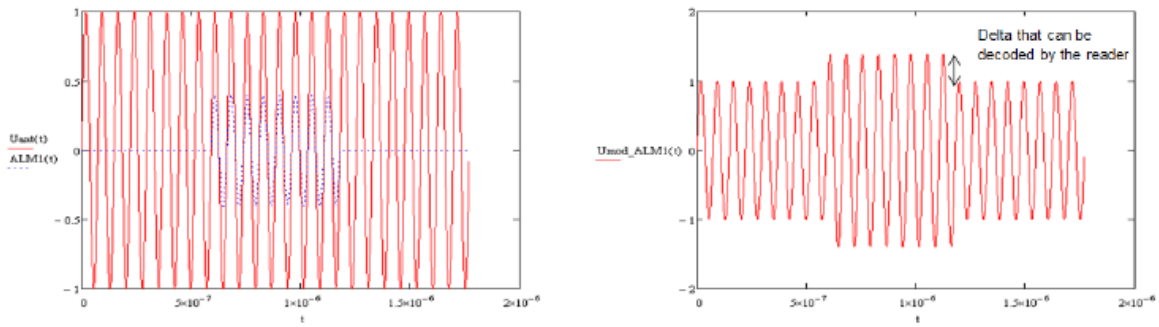

Fig 2. ALM mode SINGLE concept

On the left graph the red 13.56MHz signal shows the voltage at the NFC antenna which is induced by the reader field, the blue curve shows the modulation pattern. This modulation pattern is generated by actively driving 13.56MHz with TX1 or TX2 while the other TX pin (TX2 or TX1) is kept silent.

On the right we can see the modulated reader field.

PN7150 Antenna Design and Matching Guide at 5.

ALM Mode (DUAL):

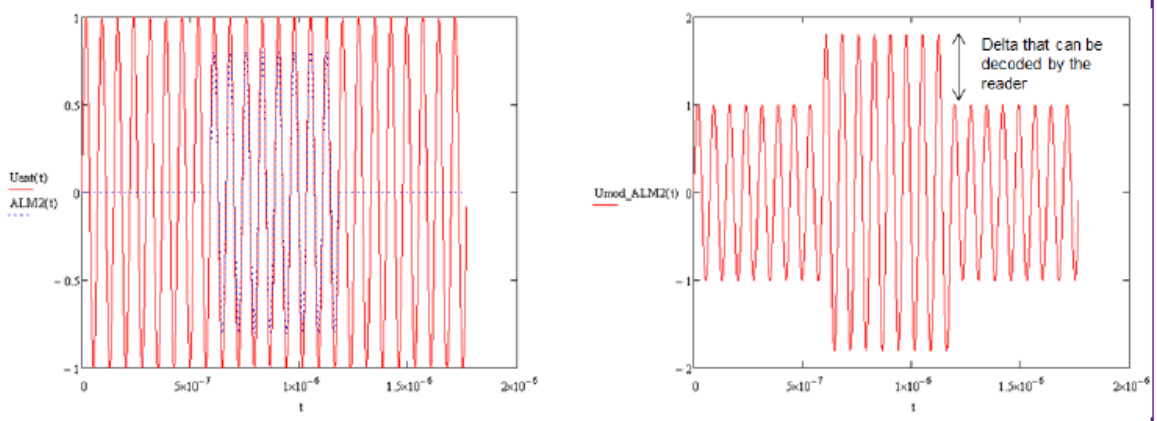

Fig 3. ALM mode DUAL concept

In this mode the modulation pattern is generated by actively driving 13.56MHz with TX1 and TX2. The modulation depth observed is twice the modulation depth of mode 1.

PN7150 Antenna Design and Matching Guide at 5.

168. The Accused Instrumentalities directly infringe at least claims 1 and 2 of the ’219 patent at least in the manner described in paragraphs 156-167 above. Plaintiff’s allegations of infringement are not limited to claims 1 and 2, and additional infringed claims will be identified and disclosed through discovery and infringement contentions.

169. Defendants have actual notice pursuant to 35 U.S.C. § 287(a) of the ’219 patent and the infringement alleged herein at least upon the filing of this Complaint. iCashe has complied with the notice requirement of 35 U.S.C. § 287. Neither iCashe nor any authorized licensee made, offered for sale, or sold within the United States any article embodying the ’219 patent claims following issuance of the ’219 patent.

170. Defendants indirectly infringe the ’219 patent by actively inducing the

direct infringement of others of the ’219 patent, in the United States, the State of Texas, and the Eastern District of Texas.

171. Defendants induce, through affirmative acts, their customers and other third parties, such as retailers and end users, to directly infringe the ’219 patent by using, offering to sell, selling within the United States, and/or importing into the United States those Accused Instrumentalities, which infringe the ’219 patent.

172. On information and belief, Defendants actively promote the Accused Instrumentalities for the U.S. market. For example, on information and belief, for every one of Defendants’ Accused Instrumentalities sold in the United States, Defendants pursue and obtain approval from U.S. and state regulatory agencies, such as the United States Federal Communications Commission, to allow sales of such Accused Instrumentalities in the United States.

173. Defendants know that their customers will sell infringing Accused Instrumentalities in the United States or cause Accused Instrumentalities to be sold in the United States, and Defendants specifically intend their customers to purchase those Accused Instrumentalities from Defendants and sell the Accused Instrumentalities in the United States or cause Accused Instrumentalities to be sold in the United States. Defendants’ direct and indirect purchasers directly infringe the ’219 patent by importing such Accused Instrumentalities into the United States, selling such Accused Instrumentalities in the United States, and using such Accused Instrumentalities in the United States.

174. Defendants further induce others’ direct infringement of the ’219 patent by

providing instruction and direction to end users, such as consumers, about how to use the Accused Instrumentalities such that those end users use the Accused Instrumentalities and directly infringe the ’219 patent. Defendants have knowledge that end users will use Accused Instrumentalities in the manner directed by Defendants and specifically intend that end users will perform such uses in the United States. Such infringing uses occur upon operation of the Accused Instrumentalities in their normal, intended manner without any specific action of the end user other than turning on the product. That is, Defendants have configured the Accused Instrumentalities in such a way as to induce infringement by end users upon any use of those Accused Instrumentalities.

175. Defendants induce others’ direct infringement despite actual notice that the Accused Instrumentalities infringe the ’219 patent. At least as of the date of filing of this Complaint, Defendants know that the induced conduct would constitute infringement—and intend that infringement at the time of committing the aforementioned affirmative acts, such that the acts and conduct have been and continue to be committed with the specific intent to induce infringement—or deliberately avoided learning of the infringing circumstances at the time of committing these acts so as to be willfully blind to the infringement that was induced.

176. The above-described acts of infringement committed by Defendants have caused injury and damage to iCashe, and will cause additional severe and irreparable injury and damages in the future.

177. Defendants’ acts of infringement as described above are willful, at least as of the date of filing of this Complaint.

178. iCashe is entitled to recover damages sustained as a result of Defendants' wrongful acts in an amount subject to proof at trial, but in no event less than a reasonable royalty.

COUNT V: INFRINGEMENT OF U.S. PATENT NO. 9,202,156

179. The allegations set forth in paragraphs 1 through 44 of this Complaint are incorporated by reference as though fully set forth herein.

180. Pursuant to 35 U.S.C. § 282, the '156 patent is presumed valid.

181. Defendants have directly infringed and continue to infringe one or more claims of the '156 patent in violation of 35 U.S.C. § 271. The infringing products are the Accused Instrumentalities. The Samsung Galaxy S20 5G smartphone, described below, provides a representative example of Samsung's infringement of the '156 patent.

182. Paragraphs 184-195 describe the manner in which the Accused Instrumentalities infringe claim 1 of the '156 patent, by way of the exemplary Samsung Galaxy S20 5G smartphone.

183. On information and belief, the Accused Instrumentalities are in relevant part substantially similar to the exemplary Samsung Galaxy S20 5G smartphone, in particular with regard to the manner in which the Accused Instrumentalities include and utilize NFC- and/or TVMF-based functionality. Paragraphs 184-195 are thus illustrative of the manner in which each of the Accused Instrumentalities infringes.

184. The Samsung Galaxy S20 5G smartphone is a mobile device. Specifically, the Samsung Galaxy S20 5G smartphone is a mobile phone.

https://www.samsung.com/us/mobile/galaxy-s20-5g/buy/galaxy-s20-fe-5g-128gb-unlocked-sm-g781uzbmxaa/ (last accessed June 6, 2024).

185. The Samsung Galaxy S20 5G smartphone contains circuitry to provide a time-varying magnetic field that mimics a swipe of a magnetic card. For example, the Samsung Galaxy S20 5G smartphone includes an antenna element and a driver chip for performing payment transactions using Magnetic Secure Transmission (MST).

What is MST (Magnetic Secure Transmission)?

Magnetic Secure Transmission (MST) is a technology that emits a magnetic signal that mimics the magnetic strip on a traditional payment card. MST sends a magnetic signal from your device to the payment terminal's card reader (to emulate swiping a physical card without having to upgrade the terminal's software or hardware). MST technology is accepted at nearly all payment terminals with a card reader. Some payment terminals may require software updates. Simply select a card from Samsung Pay, and transmit the payment information by moving your device within an inch of the payment terminal. Your transaction and payment information will be kept private and secure with the use of tokenization. MST is more secure than using a traditional payment card and is as secure as paying with Near Field Communication (NFC).

https://web.archive.org/web/20181010181540/https://www.samsung.com/us/support/answer/ANS00043865/ (last accessed June 6, 2024).

186. The antenna of the Samsung Galaxy S20 5G smartphone is part of the wireless charging coil component depicted below.

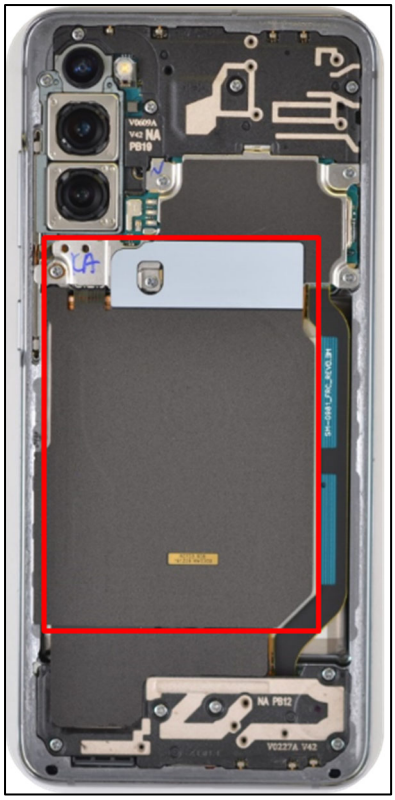

Teardown image from Samsung Galaxy S20 5G smartphone (emphasis added).

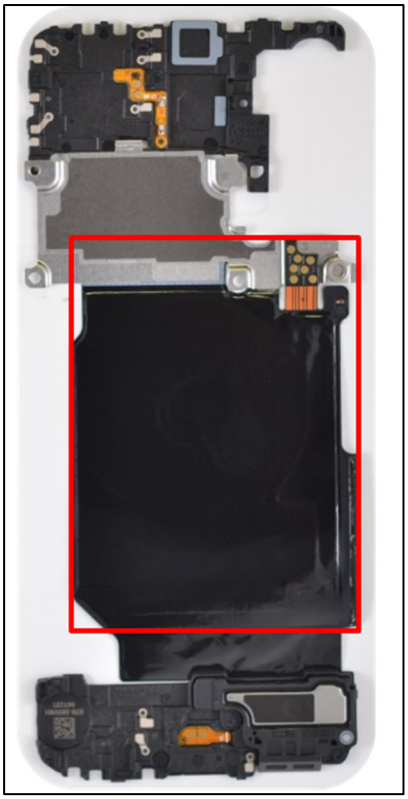

Teardown image from Samsung Galaxy S20 5G smartphone (emphasis added).

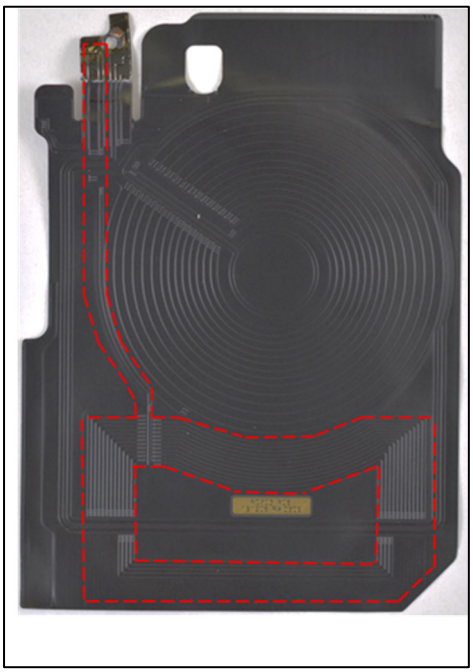

Teardown image from Samsung Galaxy S20 5G smartphone (emphasis added).

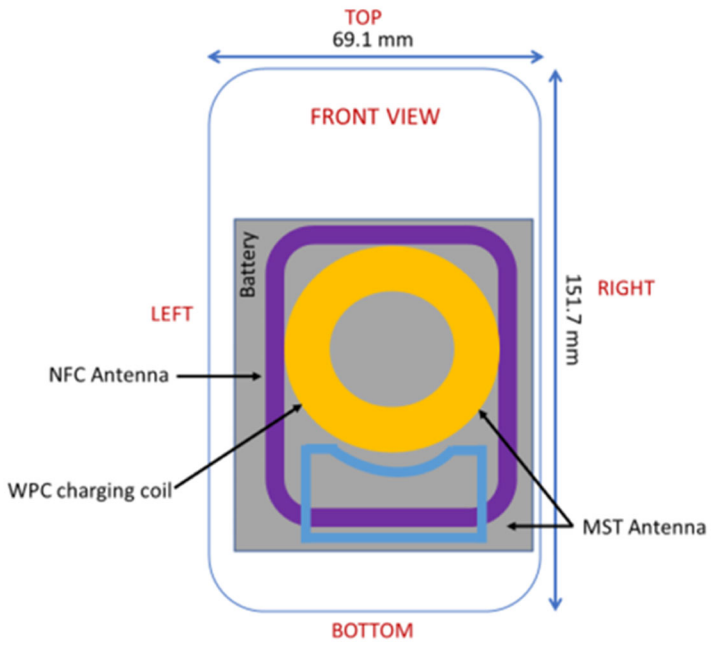

Figure E-2
WPC Charging Coil + NFC/MST Antenna Locations

FCC ID: A3LSMG981U Part-0-1-SAR-Test Report, Appendix E: DUT Antenna Diagram & SAR Test Setup Photographs at 3.

187. Additionally, the Samsung Galaxy S20 5G smartphone includes an MST chip, which provides magnetic secure transmission functionality, enabling MST payment transactions. For example, certain models of the Samsung Galaxy S20 5G smartphone sold in the United States contain a Samsung S2MIS01A MST Driver chip, as shown below.

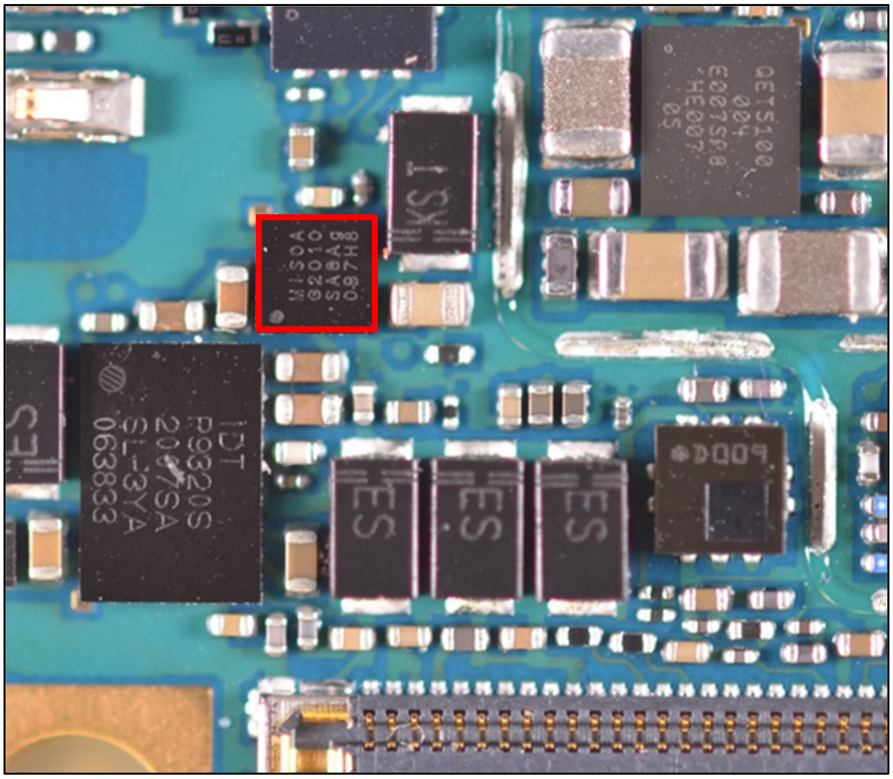

Teardown image from Samsung Galaxy S20 5G smartphone (emphasis added).

188. The antenna and the Samsung S2MIS01A chip operate to produce a time-varying magnetic field that mimics a swipe of a magnetic card.

What is MST (Magnetic Secure Transmission)?

Magnetic Secure Transmission (MST) is a technology that emits a magnetic signal that mimics the magnetic strip on a traditional payment card. MST sends a magnetic signal from your device to the payment terminal's card reader (to emulate swiping a physical card without having to upgrade the terminal's software or hardware). MST technology is accepted at nearly all payment terminals with a card reader. Some payment terminals may require software updates. Simply select a card from Samsung Pay, and transmit the payment information by moving your device within an inch of the payment terminal. Your transaction and payment information will be kept private and secure with the use of tokenization. MST is more secure than using a traditional payment card and is as secure as paying with Near Field Communication (NFC).

https://web.archive.org/web/20181010181540/https://www.samsung.com/us/support/answer/ANS00043865/ (last accessed June 6, 2024).

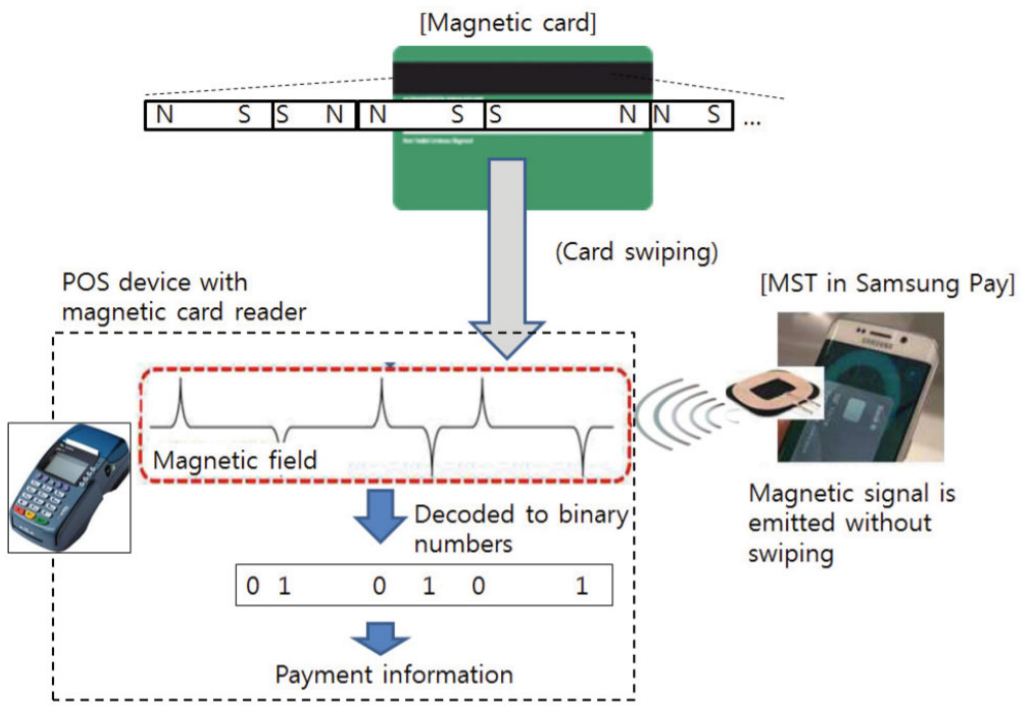

FIGURE 1. Overview of MST.

Choi, et al., *Eavesdropping of Magnetic Secure Transmission Signals and its Security Implications for a Mobile Payment Protocol*, IEEE Access vol. 6 (2018).

189. The Samsung Galaxy S20 5G smartphone contains a memory to hold transaction data. As indicated below, the Samsung Galaxy S20 5G smartphone includes internal memory storage as well as random access memory (RAM).

Memory

Internal Memory	Available Memory	External Memory Support
128GB, 128GB Storage, 12GB RAM	103.8GB	MicroSD (Up to 1TB)

RAM_Size (GB)
12GB

https://www.samsung.com/us/business/support/owners/product/galaxy-s20-5g-unlocked/ (last accessed June 6, 2024).

190. For example, the Samsung Galaxy S20 5G smartphone includes LPDDR5 memory such as the Samsung K3LK4K40BM-BGCN chip, as shown below.

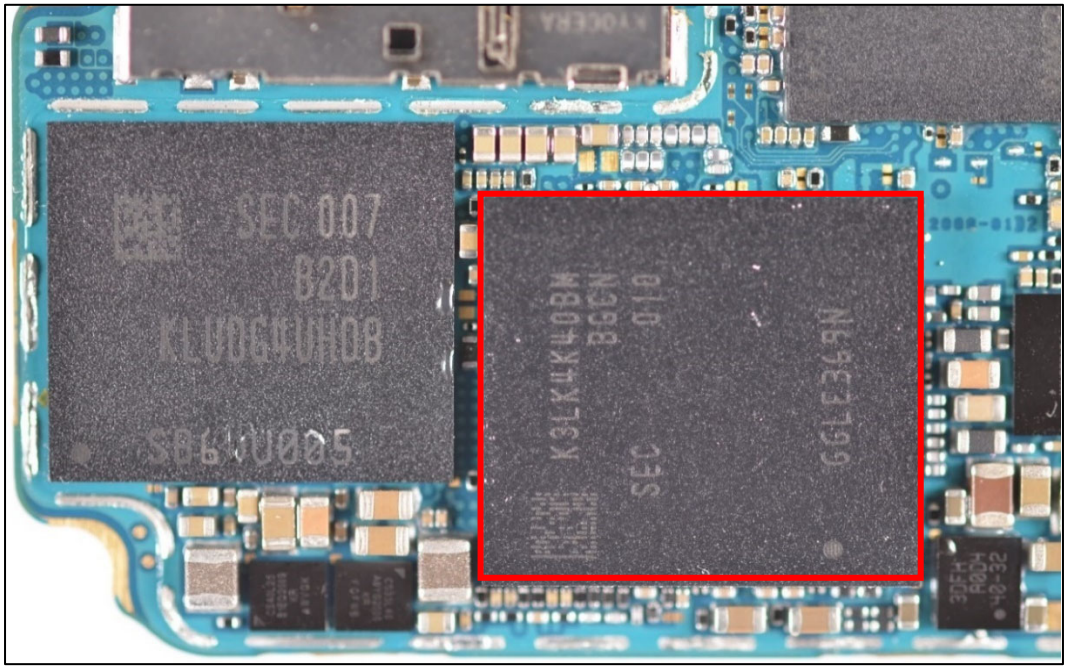

Teardown image from Samsung Galaxy S20 5G smartphone (emphasis added).

191. Additionally, the Samsung Galaxy S20 5G smartphone includes an application processor, i.e., an octa-core processor. For example, certain models of the Samsung Galaxy S20 5G smartphone sold in the United States contain a Qualcomm SM8250 Octa-Core Snapdragon 865 application processor. *See* https://www.qualcomm.com/snapdragon/device-finder/samsung-galaxy-s20-5g. In addition to the discrete LPDDR5 memory chip, the Snapdragon 865 processor necessarily contains on-chip memory stores.

Processor

CPU Type	CPU Speed
Octa-Core	2.8GHz,2.4GHz,1.8GHz

https://www.samsung.com/us/business/support/owners/product/galaxy-s20-5g-unlocked/ (last accessed June 6, 2024).

192. When the Samsung Pay application is used to complete a payment transaction via MST transmission, a one-time token associated with the transaction is transmitted by the Samsung Galaxy S20 5G smartphone to a POS device. The Samsung Galaxy S20 5G smartphone therefore necessarily stores this token (transaction data) in memory to send the transmission.

> With the Samsung Pay system, the card network returns card data that's been tokenized using a secure channel to the device, and hardware-based keys within the device encrypt and authenticate its data. Only encrypted data is returned to the Samsung Pay app to avoid security and privacy risks. The security and integrity of the tokenized data is protected because it can only be accessed in the Trusted Execution Environment (TEE) of the device. When the tokenized card details are sent to the TEE, an authentication code is generated for that particular transaction. With Samsung Pay, tokenization is available for securing both near field communication and magnetic stripe payments.

https://insights.samsung.com/2016/02/08/advancing-mobile-payment-security-with-tokenization/ (last accessed June 6, 2024) (emphasis added).

193. The Samsung Galaxy S20 5G smartphone contains a processor coupled to the circuitry to cause the circuitry to produce a time-varying magnetic field that represents the transaction data. As described above, the Samsung Galaxy S20 5G smartphone includes an application processor, i.e., an octa-core processor, such as the Qualcomm SM8250 Octa-Core Snapdragon 865 application processor. The application processor and LPDDR5 memory are configured in a stacked arrangement with the LPDDR5 memory attached to the top surface of the application processor. In the image below, the location of the processor (beneath the memory chip) is designated by a dashed yellow line.

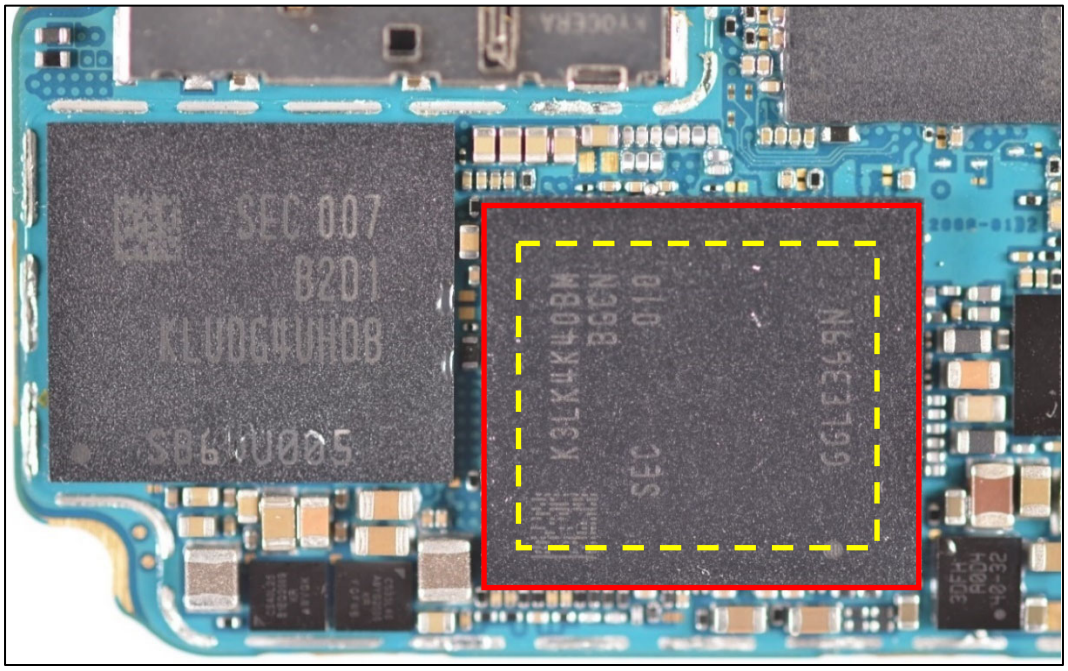

Teardown image from Samsung Galaxy S20 5G smartphone (emphasis added).

194. The processor is coupled to the Samsung S2MIS01A MST Driver chip and the MST antenna element via traces on the main circuit board. Additionally, the processor may include functional blocks or circuitry that may be contained within the

MST Driver chip.

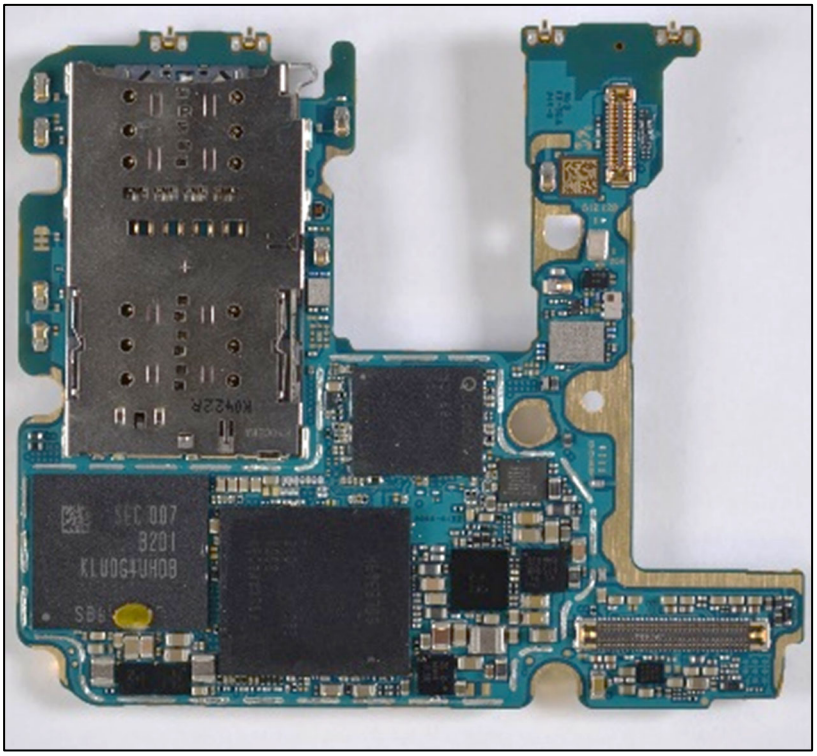

Teardown image from Samsung Galaxy S20 5G smartphone.

195. The processor of the Samsung Galaxy S20 5G smartphone operates in conjunction with the antenna and the Samsung S2MIS01A MST Driver chip to produce a time-varying magnetic field that represents the transaction data. For example, when the Samsung Pay application is used to complete a payment transaction via MST transmission, a time-varying magnetic field is generated to transmit a one-time token associated with a transaction to a POS device.

What is MST (Magnetic Secure Transmission)?

Magnetic Secure Transmission (MST) is a technology that emits a magnetic signal that mimics the magnetic strip on a traditional payment card. MST sends a magnetic signal from your device to the payment terminal's card reader (to emulate swiping a physical card without having to upgrade the terminal's software or hardware). MST technology is accepted at nearly all payment terminals with a card reader. Some payment terminals may require software updates. Simply select a card from Samsung Pay, and transmit the payment information by moving your device within an inch of the payment terminal. Your transaction and payment information will be kept private and secure with the use of tokenization. MST is more secure than using a traditional payment card and is as secure as paying with Near Field Communication (NFC).

https://web.archive.org/web/20181010181540/https://www.samsung.com/us/support/answer/ANS00043865/ (last accessed June 6, 2024).

With the Samsung Pay system, the card network returns card data that's been tokenized using a secure channel to the device, and hardware-based keys within the device encrypt and authenticate its data. Only encrypted data is returned to the Samsung Pay app to avoid security and privacy risks. The security and integrity of the tokenized data is protected because it can only be accessed in the Trusted Execution Environment (TEE) of the device. When the tokenized card details are sent to the TEE, an authentication code is generated for that particular transaction. With Samsung Pay, tokenization is available for securing both near field communication and magnetic stripe payments.

https://insights.samsung.com/2016/02/08/advancing-mobile-payment-security-with-tokenization/ (last accessed June 6, 2024) (emphasis added).

196. The Accused Instrumentalities directly infringe at least claim 1 of the '156 patent at least in the manner described in paragraphs 184-195 above. Plaintiff's allegations of infringement are not limited to claim 1, and additional infringed claims will be identified and disclosed through discovery and infringement contentions.

197. Defendants have actual notice pursuant to 35 U.S.C. § 287(a) of the '156 patent and the infringement alleged herein at least upon the filing of this Complaint.

iCashe has complied with the notice requirement of 35 U.S.C. § 287. Neither iCashe nor any authorized licensee made, offered for sale, or sold within the United States any article embodying the ’156 patent claims following issuance of the ’156 patent.

198. Defendants indirectly infringe the ’156 patent by actively inducing the direct infringement of others of the ’156 patent, in the United States, the State of Texas, and the Eastern District of Texas.

199. Defendants induce, through affirmative acts, their customers and other third parties, such as retailers and end users, to directly infringe the ’156 patent by using, offering to sell, selling within the United States, and/or importing into the United States those Accused Instrumentalities, which infringe the ’156 patent.

200. On information and belief, Defendants actively promote the Accused Instrumentalities for the U.S. market. For example, on information and belief, for every one of Defendants’ Accused Instrumentalities sold in the United States, Defendants pursue and obtain approval from U.S. and state regulatory agencies, such as the United States Federal Communications Commission, to allow sales of such Accused Instrumentalities in the United States.

201. Defendants know that their customers will sell infringing Accused Instrumentalities in the United States or cause Accused Instrumentalities to be sold in the United States, and Defendants specifically intend their customers to purchase those Accused Instrumentalities from Defendants and sell the Accused Instrumentalities in the United States or cause Accused Instrumentalities to be sold in the United States. Defendants’ direct and indirect purchasers directly infringe the ’156 patent by importing

such Accused Instrumentalities into the United States, selling such Accused Instrumentalities in the United States, and using such Accused Instrumentalities in the United States.

202. Defendants further induce others' direct infringement of the '156 patent by providing instruction and direction to end users, such as consumers, about how to use the Accused Instrumentalities such that those end users use the Accused Instrumentalities and directly infringe the '156 patent. Defendants have knowledge that end users will use Accused Instrumentalities in the manner directed by Defendants and specifically intend that end users will perform such uses in the United States. Such infringing uses occur upon operation of the Accused Instrumentalities in their normal, intended manner without any specific action of the end user other than turning on the product. That is, Defendants have configured the Accused Instrumentalities in such a way as to induce infringement by end users upon any use of those Accused Instrumentalities.

203. Defendants induce others' direct infringement despite actual notice that the Accused Instrumentalities infringe the '156 patent. At least as of the date of filing of this Complaint, Defendants know that the induced conduct would constitute infringement—and intend that infringement at the time of committing the aforementioned affirmative acts, such that the acts and conduct have been and continue to be committed with the specific intent to induce infringement—or deliberately avoided learning of the infringing circumstances at the time of committing these acts so as to be willfully blind to the infringement that was induced.

204. The above-described acts of infringement committed by Defendants have

caused injury and damage to iCashe, and will cause additional severe and irreparable injury and damages in the future.

205. Defendants' acts of infringement as described above are willful, at least as of the date of filing of this Complaint.

206. iCashe is entitled to recover damages sustained as a result of Defendants' wrongful acts in an amount subject to proof at trial, but in no event less than a reasonable royalty.

COUNT VI: INFRINGEMENT OF U.S. PATENT NO. 9,208,423

207. The allegations set forth in paragraphs 1 through 44 of this Complaint are incorporated by reference as though fully set forth herein.

208. Pursuant to 35 U.S.C. § 282, the '423 patent is presumed valid.

209. Defendants have directly infringed and continue to infringe one or more claims of the '423 patent in violation of 35 U.S.C. § 271. The infringing products are the Accused Instrumentalities. The Samsung Galaxy S20 5G smartphone, described below, provides a representative example of Samsung's infringement of the '423 patent.

210. Paragraphs 212-216 describe the manner in which the Accused Instrumentalities infringe claim 1 of the '423 patent, by way of the exemplary Samsung Galaxy S20 5G smartphone.

211. On information and belief, the Accused Instrumentalities are in relevant part substantially similar to the exemplary Samsung Galaxy S20 5G smartphone, in particular with regard to the manner in which the Accused Instrumentalities include and utilize NFC- and/or TVMF-based functionality. Paragraphs 212-216 are thus illustrative

of the manner in which each of the Accused Instrumentalities infringes.

212. The Samsung Galaxy S20 5G smartphone is a mobile phone. Paragraph 184 above is incorporated herein by reference.

213. The Samsung Galaxy S20 5G smartphone comprises circuitry to produce a time-varying magnetic field that mimics the swipe of a magnetic card. For example, the Samsung Galaxy S20 5G smartphone includes an antenna element and a driver chip, such as a Samsung S2MIS01A MST Driver chip, for performing payment transactions using MST transmission. The antenna and the Samsung S2MIS01A chip operate to produce a time-varying magnetic field that mimics a swipe of a magnetic card. Paragraphs 185-188 above are incorporated herein by reference.

214. The Samsung Galaxy S20 5G smartphone contains a processor coupled to the circuitry to cause the circuitry to produce a time-varying magnetic field that represents a single transaction account number. The Samsung Galaxy S20 5G smartphone includes an application processor, such as the Qualcomm SM8250 Octa-Core Snapdragon 865 application processor. Paragraphs 191-194 above are incorporated herein by reference.

215. The processor operates in conjunction with the antenna and the Samsung S2MIS01A MST Driver chip to produce a time-varying magnetic field that represents a single transaction account number. Paragraph 195 above is incorporated herein by reference.

216. For example, when the Samsung Pay application is used to complete a payment transaction via MST transmission, a time-varying magnetic field is generated to

transmit a one-time token associated with the transaction to a POS device. Paragraphs 189-192 above are incorporated herein by reference.

> With the Samsung Pay system, the card network returns card data that's been tokenized using a secure channel to the device, and hardware-based keys within the device encrypt and authenticate its data. Only encrypted data is returned to the Samsung Pay app to avoid security and privacy risks. The security and integrity of the tokenized data is protected because it can only be accessed in the Trusted Execution Environment (TEE) of the device. When the tokenized card details are sent to the TEE, an authentication code is generated for that particular transaction. With Samsung Pay, tokenization is available for securing both near field communication and magnetic stripe payments.

https://insights.samsung.com/2016/02/08/advancing-mobile-payment-security-with-tokenization/ (last accessed June 6, 2024) (emphasis added).

217. The Accused Instrumentalities directly infringe at least claim 1 of the '423 patent at least in the manner described in paragraphs 212-216 above. Plaintiff's allegations of infringement are not limited to claim 1, and additional infringed claims will be identified and disclosed through discovery and infringement contentions.

218. Defendants have actual notice pursuant to 35 U.S.C. § 287(a) of the '423 patent and the infringement alleged herein at least upon the filing of this Complaint. iCashe has complied with the notice requirement of 35 U.S.C. § 287. Neither iCashe nor any authorized licensee made, offered for sale, or sold within the United States any article embodying the '423 patent claims following issuance of the '423 patent.

219. Defendants indirectly infringe the '423 patent by actively inducing the direct infringement of others of the '423 patent, in the United States, the State of Texas, and the Eastern District of Texas.

220. Defendants induce, through affirmative acts, their customers and other third parties, such as retailers and end users, to directly infringe the '423 patent by using,

offering to sell, selling within the United States, and/or importing into the United States those Accused Instrumentalities, which infringe the ’423 patent.

221. On information and belief, Defendants actively promote the Accused Instrumentalities for the U.S. market. For example, on information and belief, for every one of Defendants’ Accused Instrumentalities sold in the United States, Defendants pursue and obtain approval from U.S. and state regulatory agencies, such as the United States Federal Communications Commission, to allow sales of such Accused Instrumentalities in the United States.

222. Defendants know that their customers will sell infringing Accused Instrumentalities in the United States or cause Accused Instrumentalities to be sold in the United States, and Defendants specifically intend their customers to purchase those Accused Instrumentalities from Defendants and sell the Accused Instrumentalities in the United States or cause Accused Instrumentalities to be sold in the United States. Defendants’ direct and indirect purchasers directly infringe the ’423 patent by importing such Accused Instrumentalities into the United States, selling such Accused Instrumentalities in the United States, and using such Accused Instrumentalities in the United States.

223. Defendants further induce others’ direct infringement of the ’423 patent by providing instruction and direction to end users, such as consumers, about how to use the Accused Instrumentalities such that those end users use the Accused Instrumentalities and directly infringe the ’423 patent. Defendants have knowledge that end users will use Accused Instrumentalities in the manner directed by Defendants and specifically intend

that end users will perform such uses in the United States. Such infringing uses occur upon operation of the Accused Instrumentalities in their normal, intended manner without any specific action of the end user other than turning on the product. That is, Defendants have configured the Accused Instrumentalities in such a way as to induce infringement by end users upon any use of those Accused Instrumentalities.

224. Defendants induce others' direct infringement despite actual notice that the Accused Instrumentalities infringe the '423 patent. At least as of the date of filing of this Complaint, Defendants know that the induced conduct would constitute infringement—and intend that infringement at the time of committing the aforementioned affirmative acts, such that the acts and conduct have been and continue to be committed with the specific intent to induce infringement—or deliberately avoided learning of the infringing circumstances at the time of committing these acts so as to be willfully blind to the infringement that was induced.

225. The above-described acts of infringement committed by Defendants have caused injury and damage to iCashe, and will cause additional severe and irreparable injury and damages in the future.

226. Defendants' acts of infringement as described above are willful, at least as of the date of filing of this Complaint.

227. iCashe is entitled to recover damages sustained as a result of Defendants' wrongful acts in an amount subject to proof at trial, but in no event less than a reasonable royalty.

COUNT VII: INFRINGEMENT OF U.S. PATENT NO. 11,270,174

228. The allegations set forth in paragraphs 1 through 44 of this Complaint are incorporated by reference as though fully set forth herein.

229. Pursuant to 35 U.S.C. § 282, the ’174 patent is presumed valid.

230. Defendants have directly infringed and continue to infringe one or more claims of the ’174 patent in violation of 35 U.S.C. § 271. The infringing products are the Accused Instrumentalities. The Samsung Galaxy S21 5G smartphone, described below, provides a representative example of Samsung’s infringement of the ’174 patent.

231. Paragraphs 233-250 describe the manner in which the Accused Instrumentalities infringe claim 1 of the ’174 patent, by way of the exemplary Samsung Galaxy S21 5G smartphone.

232. On information and belief, the Accused Instrumentalities are in relevant part substantially similar to the exemplary Samsung Galaxy S21 5G smartphone, in particular with regard to the manner in which the Accused Instrumentalities include and utilize NFC- and/or TVMF-based functionality. Paragraphs 233-250 are thus illustrative of the manner in which each of the Accused Instrumentalities infringes.

233. The Samsung Galaxy S21 5G smartphone is a mobile phone. Paragraph 50 above is incorporated herein by reference.

234. The Samsung Galaxy S21 5G smartphone contains a memory to hold transaction data for use in a plurality of transactions. In particular, the Samsung Galaxy S21 5G smartphone includes an internal memory storage as well as random access memory (RAM).

Memory		
Internal Memory	**Available Memory**	**RAM_Size (GB)**
128GB, 256GB	101.2GB, 219.5GB	8GB

https://www.samsung.com/us/business/support/owners/product/galaxy-s21-5g-unlocked/ (last accessed June 6, 2024).

235. For example, the Samsung Galaxy S21 5G smartphone includes LPDDR5 memory such as the Samsung K3LK7K70BM-BGCP chip, shown below.

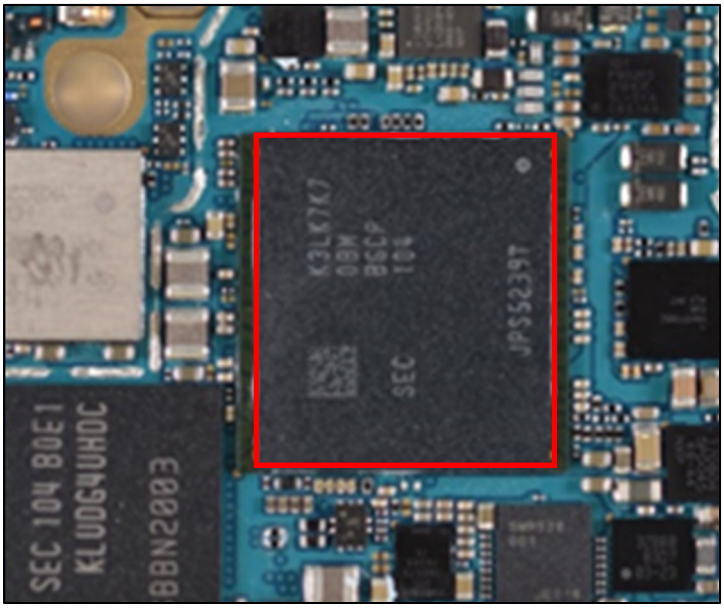

Teardown image from Samsung Galaxy S21 5G smartphone (emphasis added).

236. Additionally, the Samsung Galaxy S21 5G smartphone includes an application processor, such as an octa-core processor, such as a Qualcomm SM8350 Octa-Core Snapdragon 888 application processor. *See* https://www.qualcomm.com/snapdragon/device-finder/samsung-galaxy-s21-5g. In addition to the discrete LPDDR5 memory chip, the Snapdragon 888 processor necessarily contains on-chip memory stores (e.g., cache, register banks, etc.).

Processor	
CPU Type	**CPU Speed**
Octa-Core	2.84GHz,2.4GHz,1.8GHz

https://www.samsung.com/us/business/support/owners/product/galaxy-s21-5g-unlocked/ (last accessed June 6, 2024).

237. The Samsung Pay application stores an encrypted version of a card number that is sent to POS devices during Samsung Pay transactions. The Samsung Galaxy S21 5G smartphone therefore necessarily stores this encrypted data (transaction data) in memory to send the transmission. Samsung Pay may be used to complete a plurality of transactions.

Is my credit or debit card number actually stored on my device?

No. The card information is encrypted and sent to the Samsung Pay server for processing with the payment card network's (i.e., Visa, MasterCard, or American Express) tokenization server. After processing, a token is assigned to your device, and this token is used in place of the card number. When you process a payment, this token along with other transactional information is sent to the payment terminal. Your card number is not part of this data. The terminal processing the payment does not receive your card number as part of the transaction.

Is my credit or debit card number actually stored on the Samsung Pay server?

No. The card number is encrypted and passed to the payment card network's (i.e., Visa, MasterCard, or American Express) tokenization server. After processing, a token is assigned to your device, and this token is used in place of the card number. This token information is stored on the Samsung Pay server and a copy is stored on your device. Your card number is not kept on the Samsung Pay server.

https://www.samsung.com/us/support/answer/ANS00078533/ (last accessed June 6, 2024) (emphasis added).

NFC and payment

Near Field Communication (NFC) allows you to communicate with another device without connecting to a network. This technology is used by Android Beam and certain payment apps. The device that you are transferring to needs to support NFC, and it needs to be within four centimeters of your device.

- From Settings, tap **Connections** > **NFC and contactless payments**, and then tap to turn on this feature.

Tap and pay

Use an NFC payment app to make payments by touching your device to a compatible credit card reader.

1. From Settings, tap **Connections** > **NFC and contactless payments**, and then tap to turn on NFC.
2. Tap **Contactless payments** to see the default payment app.
   - To use another payment app, tap an available app to choose it.
   - To use a payment app that is open, tap **Pay with currently open app**.
   - To set another payment service as the default, tap **Others**, and then tap the service you prefer.

TIP NFC technology is used with **Samsung Pay**. Turn on this feature to see how easy and secure it is to use your device to make payments.

Galaxy S21 User Manual at 118.

238. The Samsung Galaxy S21 5G smartphone contains a current carrying conductor capable of producing a time-varying magnetic field that represents the transaction data in the plurality of transactions. The Samsung Galaxy S21 5G smartphone contains an antenna, i.e., a current carrying conductor, used to transmit and receive NFC information and transaction sequences. The antenna is tuned to operate at 13.56 MHz. Paragraphs 63-64 above are incorporated herein by reference.

239. Additionally, at least certain models of the Samsung Galaxy S21 5G smartphone sold in the United States contain the NXP SN110U. The NXP SN110U chip provides near-field communications functionality, enabling NFC payment

transactions, such as for completing Samsung Pay transactions. Paragraphs 51-57 above are incorporated herein by reference.

240. Although certain information regarding the functionality or functional blocks of the SN1xx family devices is not publicly available, NXP has published detailed information about the functionality and functional blocks of other NXP NFC chips, including the PN7150. On information and belief and as detailed below, the PN7150 chip contains certain functional blocks and interfaces that are similar to some of the relevant functional blocks and interfaces of the NXP SN110U chip and surrounding circuitry in the Samsung Galaxy S21 5G smartphone. Paragraphs 58-62 above are incorporated herein by reference.

241. The antenna of the Samsung Galaxy S21 5G smartphone operates in conjunction with the NXP SN110U chip to produce a time-varying magnetic field. The NFC antenna includes a current-carrying conductor that produces a time-varying magnetic field, by producing a 13.56 MHz varying magnetic signal (modulation). The signal transmitted over the antenna is modulated and driven by circuitry of the NXP SN110U chip. The time-varying magnetic field produced by the antenna represents the transaction data in the plurality of transactions. Paragraphs 70-76 above are incorporated herein by reference.

ALM Mode (SINGLE):

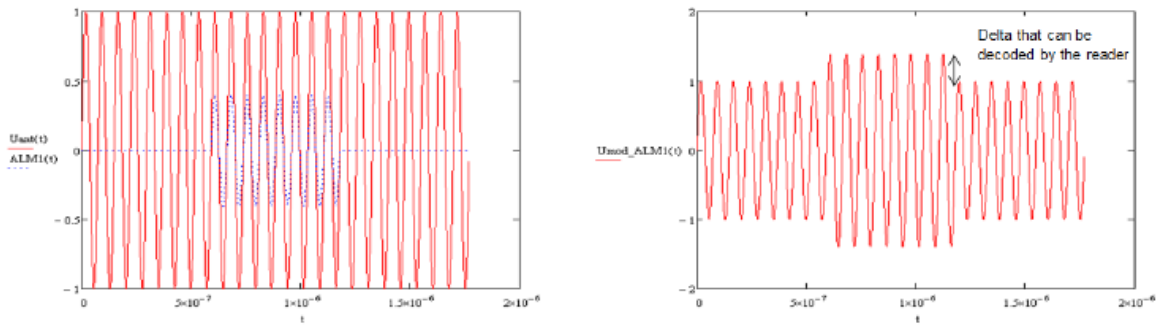

Fig 2. ALM mode SINGLE concept

On the left graph the red 13.56MHz signal shows the voltage at the NFC antenna which is induced by the reader field, the blue curve shows the modulation pattern. This modulation pattern is generated by actively driving 13.56MHz with TX1 or TX2 while the other TX pin (TX2 or TX1) is kept silent.

On the right we can see the modulated reader field.

PN7150 Antenna Design and Matching Guide at 5.

ALM Mode (DUAL):

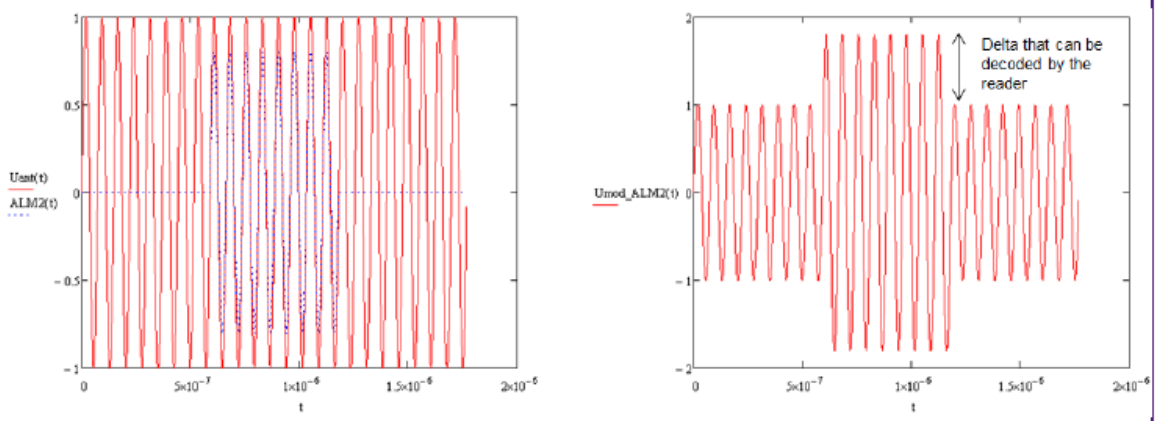

Fig 3. ALM mode DUAL concept

In this mode the modulation pattern is generated by actively driving 13.56MHz with TX1 and TX2. The modulation depth observed is twice the modulation depth of mode 1.

PN7150 Antenna Design and Matching Guide at 5.

242. The Samsung Galaxy S21 5G smartphone contains a network interface for connecting the mobile phone to a network, wherein one or more parts of the transaction data are downloadable to the mobile phone via the network. For example, the Samsung Galaxy S21 5G smartphone has an interface for Wi-Fi network connectivity.

Connectivity

Wi-Fi Connectivity	USB	Bluetooth
802.11 a/b/g/n/ac/ax 2.4G+5GHz, HE80, MIMO, 1024-QAM	USB 3.2 Gen 1	Bluetooth v5.0

https://www.samsung.com/us/business/support/owners/product/galaxy-s21-5g-unlocked/ (last accessed June 6, 2024).

243. The Samsung Galaxy S21 5G smartphone also includes an interface for cellular network connectivity.

Network		
2G GSM	**2G CDMA**	**3G UMTS**
GSM850,GSM900,DCS1800,PCS1900	CDMA800,USPCS1900	B1(2100),B2(1900),B4(AWS),B5(850),B8(900)
3G CDMA	**4G FDD LTE**	**4G TDD LTE**
BC0(800),BC1(1900),BC10(800)	B1(2100),B2(1900),B3(1800),B4(AWS),B5(850),B7(2600),B8(900),B12(700),B13(700),B14(700),B18(800),B19(800),B20(800),B25(1900),B26(850),B28(700),B30(2300),B66(AWS-3),B71(600)	B38(2600),B39(1900),B40(2300),B41(2500),B46(5200),B48(3600)

https://www.samsung.com/us/business/support/owners/product/galaxy-s21-5g-unlocked/ (last accessed June 6, 2024).

244. Through this network connectivity, one or more parts of the transaction data are downloadable to the mobile phone via the network. For example, the Samsung Pay Application or Samsung Wallet Application may be used to download transaction data, such as card information, to the mobile phone via the network. An example of a request for updated card information is shown below.

Get Card Data

Returns the detailed information of the requested card.

Request

Type	Value			Description
Method	GET			
URL	{Partner server URL}/cards/{Card Id}/{refId}?fields={fields}			
Headers	Authorization	String (1024)	Required	Credential token. The token can have prefix "Bearer" as an authorization type, e.g., Bearer <credentials>. * Refer to ***Authorization Token*** for more details.
	x-request-id	String (32)	Required	Request identifier. Randomly generated UUID string.
Path Parameters	Card Id	String (32)	Required	Wallet card identifier. * Refer to ***"Add to Wallet" Interfaces*** for more details.
	refId	String (32)	Required	Unique content identifier defined by the content provider
Query Parameter	fields	String(128)	Optional	Attributes which intended to retrieve. Can be specified using commas(,) as separators. * Refer to balance,barcode.
Payload	N/A			
Example	GET /cards/12584806754/ref-20230304-0003			

https://developer.samsung.com/wallet/api/server-interaction.html (last accessed June 6, 2024).

245. The Samsung Galaxy S21 5G smartphone contains a driver to excite the current carrying conductor. The NXP SN110U chip, which was designed for ALM, contains a driver for driving the antenna. On information and belief, the NXP SN110U chip contains functional blocks and circuitry within the embedded NFC controller that correspond to the active load modulation circuitry shown and described with respect to the PN7150. Paragraphs 70-74 above are incorporated herein by reference.

246. Further, testing of the Samsung Galaxy S21 5G smartphone confirms that

the Samsung Galaxy S21 5G smartphone uses ALM functionality of the NXP SN110U chip for actively transmitting modulated data to an NFC reader. Paragraphs 75-76 above are incorporated herein by reference.

247. The Samsung Galaxy S21 5G smartphone contains a processor coupled to control the driver. The NXP SN110U chip is and/or contains a processor coupled to control the driver. Specifically, on information and belief, the NXP SN110U chip contains circuitry and functional blocks within the embedded NFC controller that correspond to certain circuitry and functional blocks within the CIU of the PN7150. The CIU includes a transmitter control block, TxCtrl, coupled to drive the modulated signal.

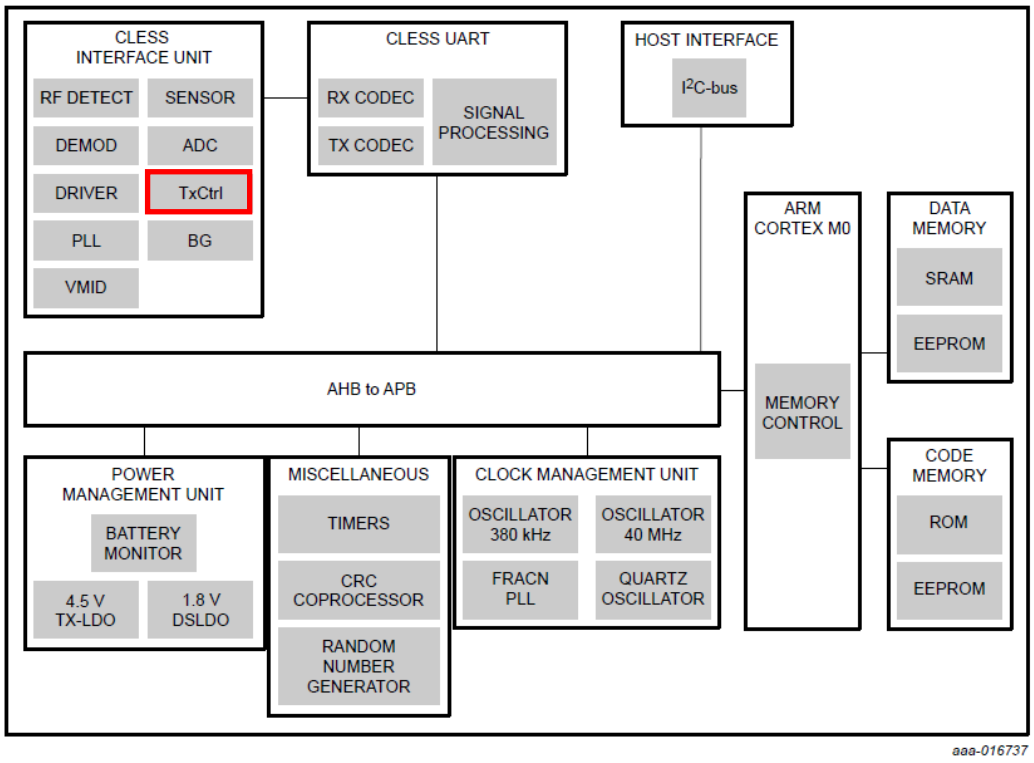

Fig 3. PN7150 block diagram

PN7150 Data Sheet at 10 (emphasis added).

248. Further, the NXP SN110U includes a microcontroller, i.e., a processor, which may include the embedded secure element, and which controls the SN110U chip, as shown below with respect to the PN7150 (ARM Cortex M0). The microcontroller is also a processor coupled to control the driver.

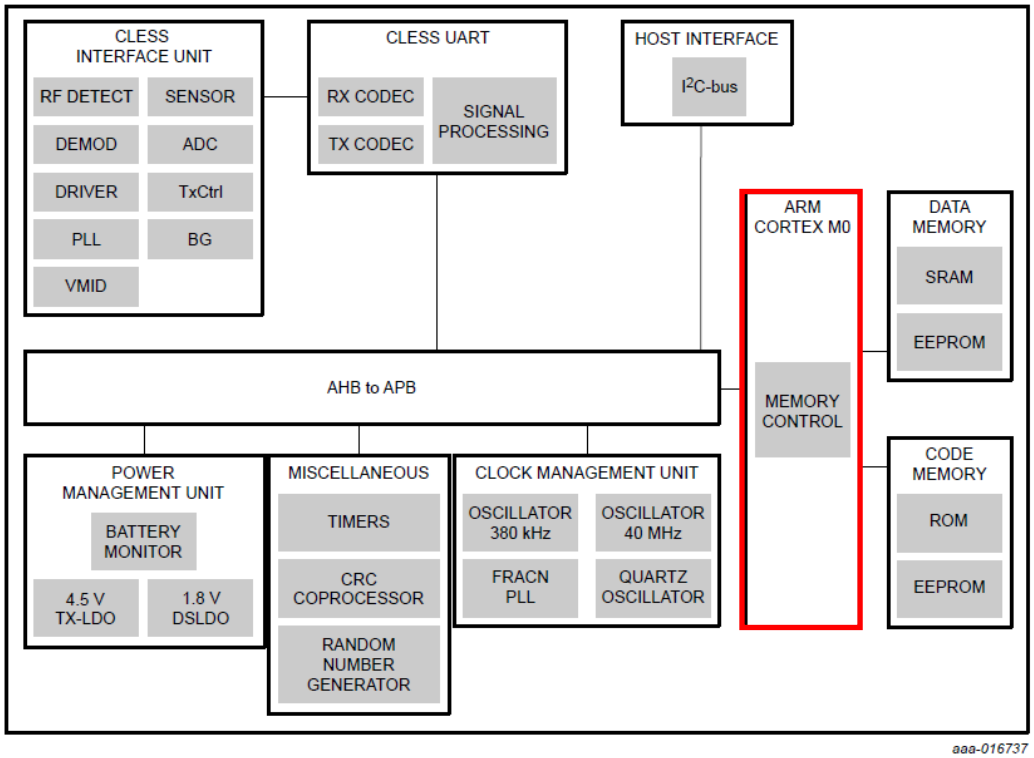

Fig 3. PN7150 block diagram

PN7150 Data Sheet at 10 (emphasis added).

249. Additionally, the Samsung Galaxy S21 5G smartphone includes an application processor, i.e., an octa-core processor such as a Qualcomm SM8350 Octa-Core Snapdragon 888 application processor. In addition to the discrete LPDDR5 memory chip, the Snapdragon 888 processor necessarily contains on-chip memory stores (e.g., cache, register banks, etc.).

Processor	
CPU Type	**CPU Speed**
Octa-Core	2.84GHz,2.4GHz,1.8GHz

https://www.samsung.com/us/business/support/owners/product/galaxy-s21-5g-unlocked/ (last accessed June 6, 2024).

250. The application processor of the Samsung Galaxy S21 5G smartphone is also a processor coupled to control the driver. The application processor is necessarily coupled to the NXP SN110U chip via traces on the main circuit board to the SN110U's UART/I2C and/or SPI interfaces.

251. The Accused Instrumentalities directly infringe at least claim 1 of the '174 patent at least in the manner described in paragraphs 233-250 above. Plaintiff's allegations of infringement are not limited to claim 1, and additional infringed claims will be identified and disclosed through discovery and infringement contentions.

252. Defendants have actual notice pursuant to 35 U.S.C. § 287(a) of the '174 patent and the infringement alleged herein at least upon the filing of this Complaint. iCashe has complied with the notice requirement of 35 U.S.C. § 287. Neither iCashe nor any authorized licensee made, offered for sale, or sold within the United States any article embodying the '174 patent claims following issuance of the '174 patent.

253. Defendants indirectly infringe the '174 patent by actively inducing the direct infringement of others of the '174 patent, in the United States, the State of Texas, and the Eastern District of Texas.

254. Defendants induce, through affirmative acts, their customers and other third parties, such as retailers and end users, to directly infringe the '174 patent by using,

offering to sell, selling within the United States, and/or importing into the United States those Accused Instrumentalities, which infringe the ’174 patent.

255. On information and belief, Defendants actively promote the Accused Instrumentalities for the U.S. market. For example, on information and belief, for every one of Defendants’ Accused Instrumentalities sold in the United States, Defendants pursue and obtain approval from U.S. and state regulatory agencies, such as the United States Federal Communications Commission, to allow sales of such Accused Instrumentalities in the United States.

256. Defendants know that their customers will sell infringing Accused Instrumentalities in the United States or cause Accused Instrumentalities to be sold in the United States, and Defendants specifically intend their customers to purchase those Accused Instrumentalities from Defendants and sell the Accused Instrumentalities in the United States or cause Accused Instrumentalities to be sold in the United States. Defendants’ direct and indirect purchasers directly infringe the ’174 patent by importing such Accused Instrumentalities into the United States, selling such Accused Instrumentalities in the United States, and using such Accused Instrumentalities in the United States.

257. Defendants further induce others’ direct infringement of the ’174 patent by providing instruction and direction to end users, such as consumers, about how to use the Accused Instrumentalities such that those end users use the Accused Instrumentalities and directly infringe the ’174 patent. Defendants have knowledge that end users will use Accused Instrumentalities in the manner directed by Defendants and specifically intend

that end users will perform such uses in the United States. Such infringing uses occur upon operation of the Accused Instrumentalities in their normal, intended manner without any specific action of the end user other than turning on the product. That is, Defendants have configured the Accused Instrumentalities in such a way as to induce infringement by end users upon any use of those Accused Instrumentalities.

258. Defendants induce others' direct infringement despite actual notice that the Accused Instrumentalities infringe the '174 patent. At least as of the date of filing of this Complaint, Defendants know that the induced conduct would constitute infringement—and intend that infringement at the time of committing the aforementioned affirmative acts, such that the acts and conduct have been and continue to be committed with the specific intent to induce infringement—or deliberately avoided learning of the infringing circumstances at the time of committing these acts so as to be willfully blind to the infringement that was induced.

259. The above-described acts of infringement committed by Defendants have caused injury and damage to iCashe, and will cause additional severe and irreparable injury and damages in the future.

260. Defendants' acts of infringement as described above are willful, at least as of the date of filing of this Complaint.

261. iCashe is entitled to recover damages sustained as a result of Defendants' wrongful acts in an amount subject to proof at trial, but in no event less than a reasonable royalty.

JURY TRIAL DEMANDED

iCashe, Inc., hereby demands a trial by jury on all claims and issues so triable.

PRAYER FOR RELIEF

WHEREFORE, Plaintiff iCashe respectfully requests that this Court:

A. Enter judgment that each of the Defendants has infringed one or more claims of each of the iCashe Patents and continues to infringe those claims, and that such infringement is willful;

B. Enter an order, pursuant to 35 U.S.C. § 284, awarding to Plaintiff iCashe monetary relief in an amount adequate to compensate for Defendants' infringement of the iCashe Patents, in an amount to be determined at trial, but not less than a reasonable royalty, as well as pre- and post-judgment interest and costs and enhanced damages for Defendants' willful infringement of the iCashe Patents;

C. Enter an order that Defendants pay to Plaintiff iCashe ongoing royalties in an amount to be determined for any infringement occurring after the date that judgment is entered;

D. Enter an order, pursuant to 35 U.S.C. § 285, declaring this to be an exceptional case and thereby awarding to Plaintiff iCashe its reasonable attorneys' fees; and

E. Enter an order awarding to Plaintiff iCashe such other and further relief, whether at law or in equity, that this Court seems just, equitable, and proper.

Dated: June 6, 2024

Respectfully submitted,

By: */s/ Aaron R. Fahrenkrog w/permission*
Andrea L. Fair

Aaron R. Fahrenkrog
LEAD ATTORNEY
MN Bar No. 0386673 (admitted in this District)
Email: afahrenkrog@robinskaplan.com
Logan J. Drew
MN Bar No. 0389449 (admitted in this District)
Email: ldrew@robinskaplan.com
Emily J. Tremblay
MN Bar No. 0395003 (to appear *pro hac vice*)
Email: etremblay@robinskaplan.com
Jessica L. Gutierrez
MN Bar No. 0396359 (to appear *pro hac vice*)
Email: jgutierrez@robinskaplan.com
William R. Jones
MN Bar No. 0402360 (to appear *pro hac vice*)
Email: wjones@robinskaplan.com
ROBINS KAPLAN LLP
2800 LaSalle Plaza
800 LaSalle Avenue
Minneapolis, MN 55402
Telephone: 612-349-8500
Facsimile: 612-339-4181

Of Counsel:
Andrea L. Fair
Texas State Bar No. 24078488
E-mail: andrea@wsfirm.com
WARD, SMITH & HILL, PLLC
1507 Bill Owens Parkway
Longview, TX 75604
(903) 757-6400 (telephone)
(903) 757-2323 (facsimile)

Attorneys for Plaintiff iCashe, Inc.