US009122965B2

(12) **United States Patent**
Narendra et al.

(10) **Patent No.: US 9,122,965 B2**
(45) **Date of Patent: *Sep. 1, 2015**

(54) **13.56 MHZ ENHANCEMENT CIRCUIT FOR SMARTCARD CONTROLLER**

(71) Applicant: **Tyfone, Inc.**, Portland, OR (US)

(72) Inventors: **Siva G. Narendra**, Portland, OR (US); **Saurav Chakraborty**, West Bengal (IN); **Prabhakar Tadepalli**, Bangalore (IN)

(73) Assignee: **Tyfone, INC.**, Portland, OR (US)

(*) Notice: Subject to any disclaimer, the term of this patent is extended or adjusted under 35 U.S.C. 154(b) by 0 days.

This patent is subject to a terminal disclaimer.

(21) Appl. No.: **14/517,495**

(22) Filed: **Oct. 17, 2014**

(65) **Prior Publication Data**

US 2015/0034727 A1 Feb. 5, 2015

Related U.S. Application Data

(63) Continuation of application No. 14/460,647, filed on Aug. 15, 2014, now Pat. No. 8,937,549, which is a continuation of application No. 13/871,849, filed on Apr. 26, 2013, now Pat. No. 8,866,614, which is a continuation of application No. 13/038,341, filed on Mar. 1, 2011, now Pat. No. 8,451,122, which is a continuation-in-part of application No. 12/188,346, filed on Aug. 8, 2008, now Pat. No. 7,961,101.

(51) **Int. Cl.**

G08B 13/14	(2006.01)
G06K 19/07	(2006.01)
G06K 19/077	(2006.01)

(Continued)

(52) **U.S. Cl.**

CPC ***G06K 19/0727*** (2013.01); ***G06K 19/0701*** (2013.01); ***G06K 19/073*** (2013.01); ***G06K 19/0723*** (2013.01); ***G06K 19/0726*** (2013.01); ***G06K 19/07732*** (2013.01); ***G06K 19/07749*** (2013.01); ***G06K 19/07769*** (2013.01);

(Continued)

(58) **Field of Classification Search**

CPC G06K 19/0723; G06K 19/0727; G06K 19/07732; G06K 19/07749

USPC 340/572.1, 572.8, 10.1, 10.51; 235/492, 235/379, 380, 493; 705/1; 710/100, 301

See application file for complete search history.

(56) **References Cited**

U.S. PATENT DOCUMENTS

4,701,601	A	10/1987	Francini et al.
4,786,791	A	11/1988	Hodama

(Continued)

FOREIGN PATENT DOCUMENTS

DE	3632294	A1	4/1988
DE	10054890	A1	4/2002

(Continued)

OTHER PUBLICATIONS

European search report and search opinion App #/Pat. # 12752195. 3-1811 / 2681694 PCT/US2012027128, 6 pages dated Feb. 11, 2014.

(Continued)

Primary Examiner — Toan N Pham

(74) *Attorney, Agent, or Firm* — Dana B. LeMoine

(57) **ABSTRACT**

An RFID card includes a smartcard controller that receives power from a host device. The RFID card also includes a small inductive device capable of inductive coupling with an RFID reader. The small inductive device is small enough to fit in the form factor of a memory card or SIM card. Enhancement circuits enhance the usable read and write distance of the RFID card.

20 Claims, 30 Drawing Sheets

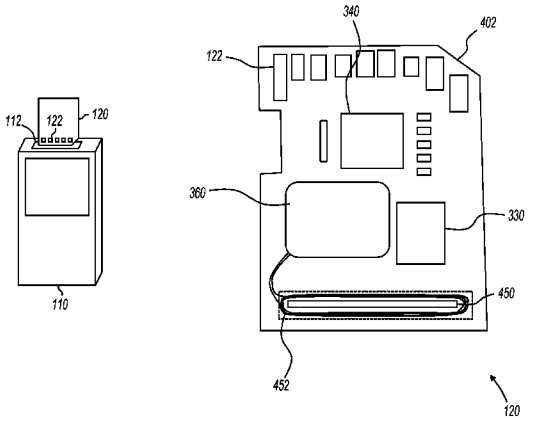

(51) **Int. Cl.**

G06K 19/073	(2006.01)
G06Q 20/20	(2012.01)
H04B 1/3816	(2015.01)
H04B 5/00	(2006.01)

(52) **U.S. Cl.**

CPC ***G06Q20/204*** (2013.01); ***H04B 1/3816*** (2013.01); ***H04B 5/0025*** (2013.01)

(56) **References Cited**

U.S. PATENT DOCUMENTS

4,791,283	A		12/1988	Burkhardt
4,864,109	A		9/1989	Minematsu et al.
5,212,478	A		5/1993	Moseley
5,378,887	A		1/1995	Kobayashi
5,537,584	A		7/1996	Miyai et al.
5,574,273	A		11/1996	Nakagawa et al.
5,585,787	A		12/1996	Wallerstein
5,629,981	A		5/1997	Nerlikar
5,700,037	A		12/1997	Keller
5,710,421	A		1/1998	Kokubu
5,834,756	A		11/1998	Gutman et al.
5,909,491	A		6/1999	Luo
5,940,510	A		8/1999	Curry et al.
5,943,624	A	*	8/1999	Fox et al. 455/556.1
5,949,880	A		9/1999	Curry et al.
5,952,641	A		9/1999	Korshun
5,955,961	A		9/1999	Wallerstein
6,016,476	A		1/2000	Maes et al.
6,021,944	A		2/2000	Arakaki
6,039,260	A		3/2000	Eisele
6,045,043	A		4/2000	Bashan et al.
6,068,184	A		5/2000	Barnett
6,105,013	A		8/2000	Curry et al.
6,182,891	B1		2/2001	Furuhashi et al.
6,189,786	B1		2/2001	Itou et al.
6,206,293	B1		3/2001	Gutman et al.
6,219,439	B1		4/2001	Burger
6,223,954	B1		5/2001	Carow
6,223,984	B1		5/2001	Renner et al.
6,237,095	B1		5/2001	Curry et al.
6,250,557	B1		6/2001	Forslund et al.
6,315,195	B1		11/2001	Ramachandran
6,402,029	B1		6/2002	Gangi
6,481,623	B1		11/2002	Grant et al.
6,568,600	B1		5/2003	Carpier et al.
6,588,660	B1		7/2003	Buescher et al.
6,592,044	B1		7/2003	Wong et al.
6,594,759	B1		7/2003	Wang
6,598,031	B1		7/2003	Ice
6,606,025	B1		8/2003	Staufer et al.
6,607,127	B2		8/2003	Wong
6,609,654	B1		8/2003	Anderson et al.
6,631,849	B2		10/2003	Blossom
6,636,833	B1		10/2003	Flitcroft et al.
6,669,487	B1		12/2003	Ishihara et al.
6,705,520	B1		3/2004	Pitroda et al.
6,712,277	B2		3/2004	Spencer
6,715,679	B1		4/2004	Infosino
6,721,196	B1		4/2004	Grassl
6,747,547	B2		6/2004	Benson
6,764,005	B2		7/2004	Cooper
6,769,607	B1		8/2004	Pitroda et al.
6,805,288	B2		10/2004	Routhenstein et al.
6,811,082	B2		11/2004	Wong
6,836,843	B2		12/2004	Seroussi et al.
6,857,566	B2		2/2005	Wankmueller
6,882,900	B1		4/2005	Terranova
6,883,718	B1		4/2005	Le et al.
6,905,072	B2		6/2005	Ramachandran
6,907,123	B1		6/2005	Schier
6,908,030	B2		6/2005	Rajasekaran et al.
6,925,568	B1		8/2005	Heinonen
6,937,526	B2		8/2005	Furukawa
6,952,788	B2		10/2005	Rommelmann et al.
6,995,651	B2		2/2006	Amtmann et al.
7,059,520	B1		6/2006	Shtesl
7,088,246	B2		8/2006	Fukuoka
7,110,792	B2	*	9/2006	Rosenberg 455/558
7,185,146	B2		2/2007	Masuyama et al.
7,221,473	B2		5/2007	Jeran et al.
7,281,101	B2		10/2007	Mizushima et al.
7,295,790	B2		11/2007	Morimoto et al.
7,333,062	B2		2/2008	Leizerovich et al.
7,350,717	B2		4/2008	Conner et al.
7,353,993	B2		4/2008	Fujimoto
7,410,102	B2		8/2008	Winkler
7,493,484	B2		2/2009	Lee
7,558,107	B2		7/2009	Sakurai et al.
7,558,110	B2		7/2009	Mizushima et al.
7,581,678	B2		9/2009	Narendra et al.
7,607,580	B2		10/2009	Takita et al.
7,673,080	B1		3/2010	Yu et al.
RE41,352	E		5/2010	Wood, Jr.
7,716,082	B1		5/2010	Blalock
RE41,471	E		8/2010	Wood, Jr.
7,789,303	B2		9/2010	Fukasawa
7,792,516	B2		9/2010	Soderstrom
7,828,214	B2		11/2010	Narendra et al.
RE42,254	E		3/2011	Wood, Jr.
7,933,571	B2		4/2011	Black et al.
7,941,197	B2		5/2011	Jain et al.
7,948,356	B2		5/2011	Kawamura et al.
7,954,715	B2		6/2011	Narendra et al.
7,954,716	B2		6/2011	Narendra et al.
7,954,717	B2		6/2011	Narendra et al.
7,961,101	B2		6/2011	Narendra et al.
7,991,158	B2		8/2011	Narendra et al.
8,072,331	B2		12/2011	Narendra et al.
8,083,145	B2		12/2011	Narendra et al.
8,091,786	B2		1/2012	Narendra et al.
8,451,122	B2		5/2013	Narendra et al.
2001/0002035	A1		5/2001	Kayanakis
2001/0006902	A1		7/2001	Ito
2001/0013551	A1		8/2001	Ramachandran
2002/0007434	A1		1/2002	Campardo
2002/0043566	A1		4/2002	Goodman et al.
2002/0044043	A1		4/2002	Chaco et al.
2002/0095588	A1		7/2002	Shigematsu et al.
2002/0096570	A1		7/2002	Wong et al.
2002/0099665	A1		7/2002	Burger et al.
2002/0130187	A1		9/2002	Berg et al.
2002/0138422	A1		9/2002	Natsuno
2002/0138735	A1		9/2002	Felt et al.
2002/0139849	A1		10/2002	Gangi
2002/0148892	A1		10/2002	Bardwell
2002/0153424	A1		10/2002	Li
2002/0158747	A1		10/2002	Mcgregor et al.
2002/0178124	A1		11/2002	Lewis
2002/0180584	A1		12/2002	Mcgregor et al.
2002/0186845	A1		12/2002	Dutta et al.
2003/0025939	A1		2/2003	Jeran et al.
2003/0028481	A1		2/2003	Flitcroft et al.
2003/0052168	A1		3/2003	Wong
2003/0057278	A1		3/2003	Wong
2003/0061168	A1		3/2003	Routhenstein
2003/0079096	A1		4/2003	Murakami
2003/0080183	A1		5/2003	Rajasekaran et al.
2003/0085288	A1		5/2003	Luu
2003/0115126	A1		6/2003	Pitroda
2003/0128124	A1		7/2003	Amtmann et al.
2003/0159050	A1		8/2003	Gantman et al.
2003/0200180	A1		10/2003	Phelan et al.
2003/0220876	A1		11/2003	Burger et al.
2003/0231550	A1		12/2003	Macfarlane
2004/0006654	A1		1/2004	Bando
2004/0027881	A1		2/2004	Furukawa
2004/0030660	A1		2/2004	Shatford
2004/0035942	A1		2/2004	Silverman
2004/0050930	A1		3/2004	Rowe
2004/0058705	A1		3/2004	Morgan et al.
2004/0064612	A1		4/2004	Pinto et al.
2004/0065733	A1		4/2004	Fukuoka
2004/0077372	A1		4/2004	Halpern

(56) **References Cited**

U.S. PATENT DOCUMENTS

2004/0087339	A1	5/2004	Goldthwaite et al.
2004/0094624	A1	5/2004	Fernandes et al.
2004/0133787	A1	7/2004	Doughty et al.
2004/0162932	A1	8/2004	Mizushima et al.
2004/0177045	A1	9/2004	Brown
2004/0188519	A1	9/2004	Cassone
2004/0199469	A1	10/2004	Barillova et al.
2004/0227859	A1	11/2004	Liang
2004/0243785	A1	12/2004	Shanmugasundaram et al.
2004/0243806	A1	12/2004	Mckinley et al.
2004/0251303	A1	12/2004	Cooper
2004/0255145	A1	12/2004	Chow
2005/0006462	A1	1/2005	Rouille et al.
2005/0017068	A1	1/2005	Zalewski et al.
2005/0022002	A1	1/2005	Poisner
2005/0029349	A1	2/2005	Mcgregor et al.
2005/0038736	A1	2/2005	Saunders
2005/0039027	A1	2/2005	Shapiro
2005/0044044	A1	2/2005	Burger et al.
2005/0050367	A1	3/2005	Burger et al.
2005/0052924	A1	3/2005	Nishizawa et al.
2005/0060586	A1	3/2005	Burger et al.
2005/0071282	A1	3/2005	Lu et al.
2005/0077349	A1	4/2005	Bonalle et al.
2005/0092830	A1	5/2005	Blossom
2005/0108096	A1	5/2005	Burger et al.
2005/0109838	A1	5/2005	Linlor
2005/0116026	A1	6/2005	Burger et al.
2005/0121512	A1	6/2005	Wankmueller
2005/0122209	A1	6/2005	Black
2005/0127164	A1	6/2005	Wankmueller
2005/0127166	A1	6/2005	Minemura
2005/0133606	A1	6/2005	Brown
2005/0136964	A1	6/2005	Le Saint et al.
2005/0168339	A1	8/2005	Arai et al.
2005/0177724	A1	8/2005	Ali et al.
2005/0197859	A1	9/2005	Wilson et al.
2005/0204077	A1	9/2005	Kou
2005/0204092	A1	9/2005	Masuyama et al.
2005/0212657	A1	9/2005	Simon
2005/0223143	A1	10/2005	Kang et al.
2005/0224589	A1	10/2005	Park et al.
2005/0240778	A1	10/2005	Saito
2005/0246546	A1	11/2005	Takagi et al.
2005/0253687	A1	11/2005	Martinez et al.
2005/0258245	A1	11/2005	Bates et al.
2005/0268058	A1	12/2005	Drasnin et al.
2005/0268330	A1	12/2005	Di Rienzo
2006/0011731	A1	1/2006	Anders et al.
2006/0027655	A1	2/2006	Smets et al.
2006/0045555	A1	3/2006	Morimoto et al.
2006/0077039	A1	4/2006	Ibi et al.
2006/0097851	A1	5/2006	Amtmann et al.
2006/0124755	A1	6/2006	Ito
2006/0169778	A1	8/2006	Chung
2006/0172606	A1	8/2006	Irisawa
2006/0186209	A1	8/2006	Narendra et al.
2006/0219776	A1	10/2006	Finn
2006/0226217	A1	10/2006	Narendra et al.
2006/0268764	A1	11/2006	Harris
2006/0279413	A1	12/2006	Yeager
2007/0033334	A1	2/2007	Katayama et al.
2007/0076877	A1	4/2007	Camp et al.
2007/0108280	A1	5/2007	Li et al.
2007/0110404	A1	5/2007	Ching et al.
2007/0145135	A1	6/2007	Jogand-Coulomb et al.
2007/0145152	A1	6/2007	Jogand-Coulomb et al.
2007/0195458	A1	8/2007	Sawai et al.
2007/0205864	A1	9/2007	Mutti et al.
2007/0257797	A1	11/2007	Rancien et al.
2007/0293202	A1	12/2007	Moshir et al.
2008/0046649	A1	2/2008	Ito
2008/0065830	A1	3/2008	Aoki et al.
2008/0068173	A1	3/2008	Alexis et al.
2008/0073436	A1	3/2008	Nishizawa et al.
2008/0136619	A1	6/2008	Moran
2008/0147950	A1	6/2008	Chen
2008/0148077	A1	6/2008	Lee et al.
2008/0153416	A1	6/2008	Washiro
2008/0186174	A1	8/2008	Alexis et al.
2008/0214111	A1	9/2008	Moshir et al.
2008/0244208	A1	10/2008	Narendra et al.
2008/0279381	A1	11/2008	Narendra et al.
2008/0311849	A1	12/2008	Washiro
2008/0318535	A1	12/2008	Black et al.
2009/0065571	A1	3/2009	Jain
2009/0065572	A1	3/2009	Jain
2009/0069049	A1	3/2009	Jain
2009/0069050	A1	3/2009	Jain et al.
2009/0069051	A1	3/2009	Jain et al.
2009/0069052	A1	3/2009	Jain et al.
2009/0070272	A1	3/2009	Jain
2009/0070691	A1	3/2009	Jain
2009/0070861	A1	3/2009	Jain
2009/0108063	A1	4/2009	Jain et al.
2009/0150610	A1	6/2009	Hsu et al.
2009/0152361	A1	6/2009	Narendra et al.
2009/0199283	A1	8/2009	Jain
2009/0250521	A1	10/2009	Fujita et al.
2009/0265552	A1	10/2009	Moshir et al.
2009/0270127	A1	10/2009	Kakimoto
2009/0290582	A1	11/2009	Suenaga et al.
2009/0298540	A1	12/2009	Narendra et al.
2009/0315667	A1	12/2009	Kawamura et al.
2010/0033307	A1	2/2010	Narendra et al.
2010/0033310	A1	2/2010	Narendra et al.
2010/0044444	A1	2/2010	Jain et al.
2010/0049878	A1	2/2010	Yu et al.
2010/0069118	A1	3/2010	Wang
2010/0115164	A1	5/2010	Huang et al.
2010/0213265	A1	8/2010	Narendra et al.
2011/0053644	A1	3/2011	Narendra et al.
2011/0065386	A1	3/2011	Keller
2011/0073663	A1	3/2011	Narendra et al.
2011/0073665	A1	3/2011	Narendra et al.
2011/0077052	A1	3/2011	Narendra et al.
2011/0110404	A1	5/2011	Washiro
2011/0171996	A1	7/2011	Narendra et al.
2011/0180610	A1	7/2011	Narendra et al.
2011/0220726	A1	9/2011	Narendra et al.
2011/0223972	A1	9/2011	Narendra et al.
2011/0269438	A1	11/2011	Narendra et al.
2011/0271044	A1	11/2011	Narendra et al.
2011/0272468	A1	11/2011	Narendra et al.
2011/0272469	A1	11/2011	Narendra et al.
2013/0233931	A1	9/2013	Narendra et al.

FOREIGN PATENT DOCUMENTS

EP	161060	A1	11/1985
EP	0818757	A2	1/1998
EP	1014290	A2	6/2000
EP	1117068	A1	7/2001
EP	1178450	A2	2/2002
EP	1189465	A1	3/2002
EP	1291748	A2	3/2003
GB	2316908	A	3/1998
JP	4102112	A	4/1992
JP	2000010668	A	1/2000
JP	2005018671	A	1/2005
JP	2007199847	A	8/2007
JP	2007328689	A	12/2007
TW	200905471	A	2/2009
TW	201020934	A	6/2010
TW	201023662	A	6/2010
TW	I336449		1/2011
TW	201126422	A	8/2011
WO	9626500	A1	8/1996
WO	9812674	A2	3/1998
WO	0014678	A	3/2000
WO	0188659	A2	11/2001
WO	03029942	A2	4/2003
WO	03077473	A1	9/2003
WO	03081519	A2	10/2003

(56) **References Cited**

FOREIGN PATENT DOCUMENTS

WO	2004012352	A1	2/2004
WO	2004095169	A2	11/2004
WO	2005027030	A1	3/2005
WO	2005119607	A2	12/2005
WO	2005119608	A1	12/2005
WO	2006091709	A2	8/2006
WO	2006108184	A1	10/2006
WO	2007011937	A2	1/2007
WO	2008121566	A1	10/2008
WO	2009147548	A2	12/2009
WO	2010099093	A1	9/2010

OTHER PUBLICATIONS

International Search Report PCT Application No. PCT/US2005/019988, Dec. 16, 2005, 5 pages.
International Search Report PCT Application No. PCT/US2005/022993, Oct. 21, 2005, 3 pages.
International Search Report PCT Application No. PCT/US2006/013603, Jan. 9, 2006, 3 pages.
International Search Report PCT Application No. PCT/US2006/027847, Mar. 29, 2007, 5 pages.
International Search Report PCT Application No. PCT/US2008/057588, Aug. 7, 2008, 1 pages.
International Written Opinion PCT Application No. PCT/US2005/019988 , Dec. 4, 2006, 9 pages.
International Written Opinion PCT Application No. PCT/US2005/022993, Dec. 4, 2006, 6 pages.
International Written Opinion PCT Application No. PCT/US2006/006361, Aug. 28, 2007, 8 pages.
International Written Opinion PCT Application No. PCT/US2006/006361, Sep. 22, 2006, 13 pages.
International Written Opinion PCT Application No. PCT/US2006/013603, Oct. 9, 2007, 7 pages.
International Written Opinion PCT Application No. PCT/US2006/027847, Jan. 22, 2008, 10 pages.
International Written Opinion PCT Application No. PCT/US2008/057588, Oct. 6, 2009, 6 pages.
International Written Opinion PCT Application No. PCT/US2010/025014, Apr. 15, 2010, 9 pages.
International Written Opinion PCT Application No. PCT/US2010/025014, Sep. 9, 2011, 6 pages.
Lee, Youbok; "Antenna Circuit Design for RFID Applications", Microchip, AN710, 2003 Microchip Technology Inc., (2003), 50 pages.
PCTUS2012027128_115_026wo1_ISR_WO_Sep. 21, 2012.
Translation of official letter corresponding to patent application #100143174 dated Feb. 17, 2014, 33 pages.
U.S. Appl. No. 13/657,846 Office Action dated Apr. 11, 2014, 44 pages.
U.S. Appl. No. 14/460,647 Office Action dated Sep. 25, 2014, 7 pages.
International Written Opinion PCT Application No. PCT/US2012/027128, Sep. 12, 2013, 6 pages.
U.S. Appl. No. 14/517,567 Office Action dated Nov. 20, 2014, 8 pages.

* cited by examiner

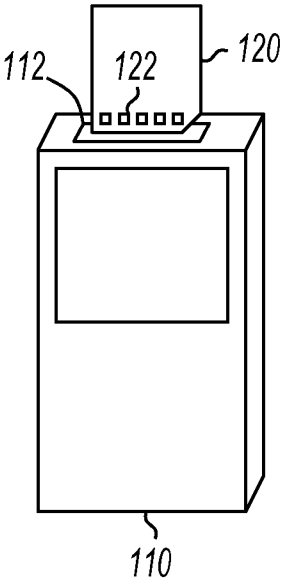
112
122
120
110

FIG. 1

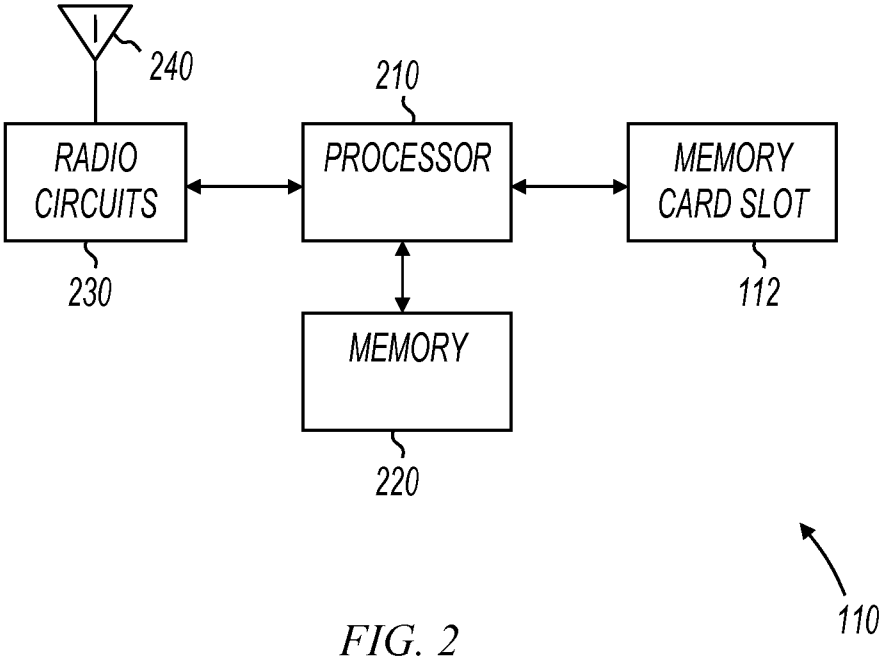
240
210
RADIO CIRCUITS
PROCESSOR
MEMORY CARD SLOT
230
112
MEMORY
220
110

FIG. 2

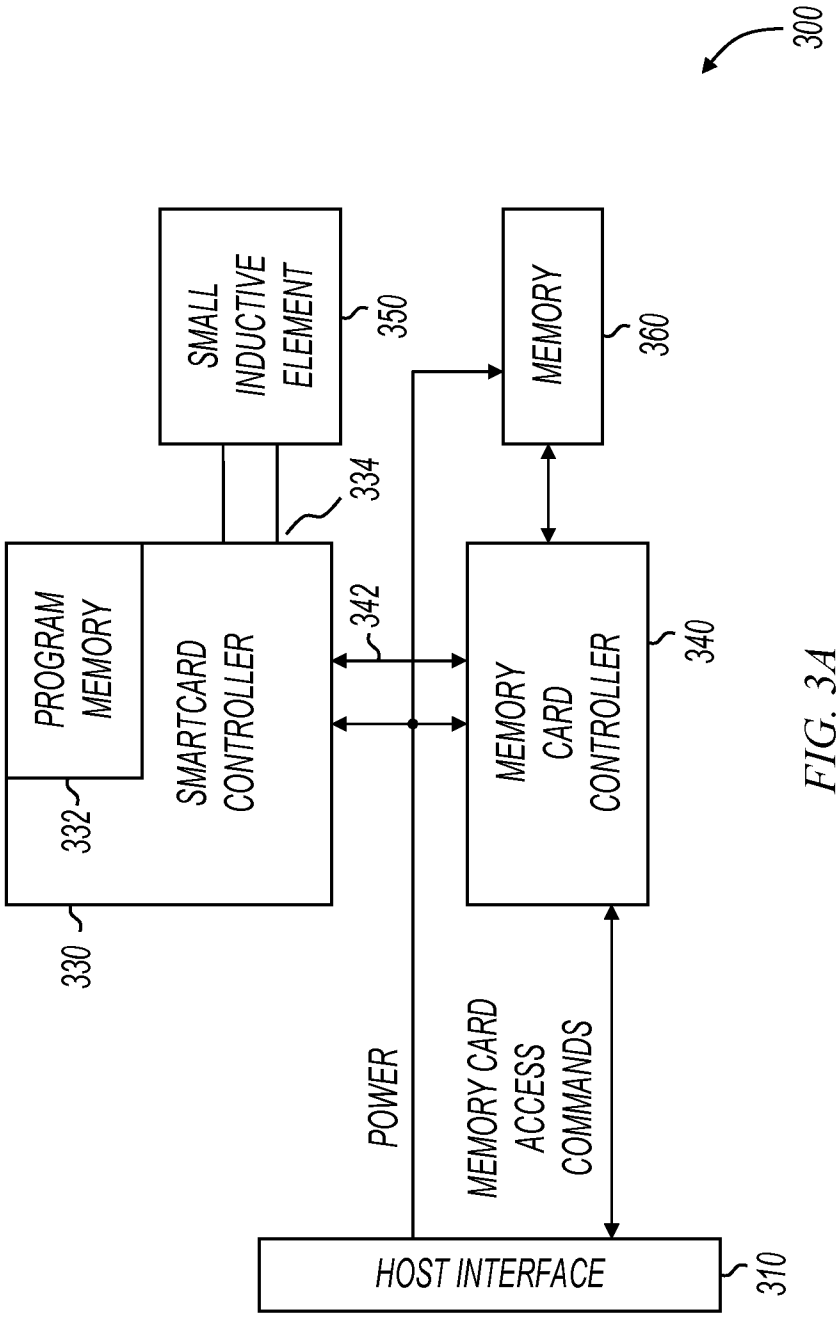
300
SMALL INDUCTIVE ELEMENT
350
MEMORY
360
334
PROGRAM MEMORY
SMARTCARD CONTROLLER
342
MEMORY CARD CONTROLLER
340
332
330
POWER
MEMORY CARD ACCESS COMMANDS
HOST INTERFACE
310

FIG. 3A

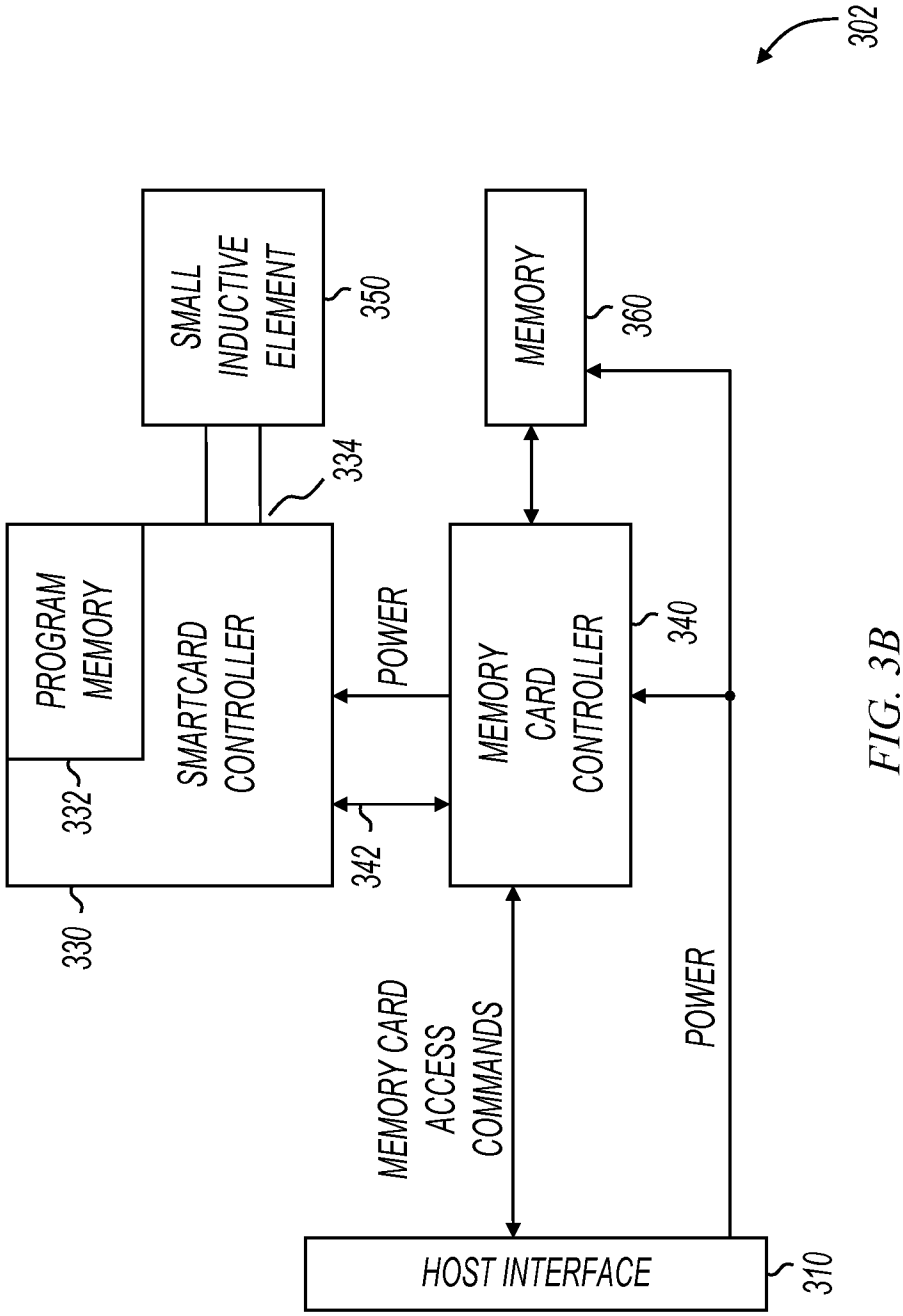
302
SMALL INDUCTIVE ELEMENT
350
MEMORY
360
334
PROGRAM MEMORY
SMARTCARD CONTROLLER
POWER
MEMORY CARD CONTROLLER
340
332
342
330
MEMORY CARD ACCESS COMMANDS
POWER
HOST INTERFACE
310

FIG. 3B

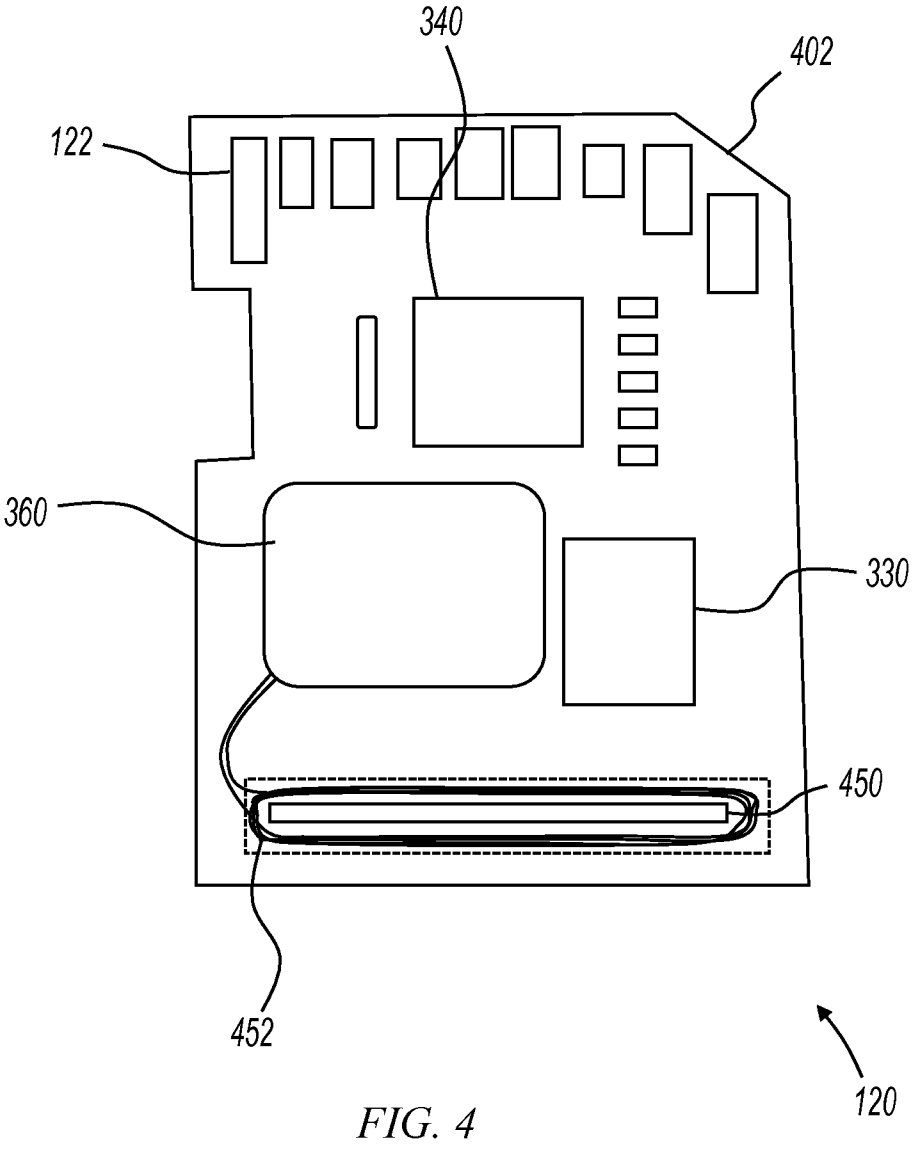

FIG. 4

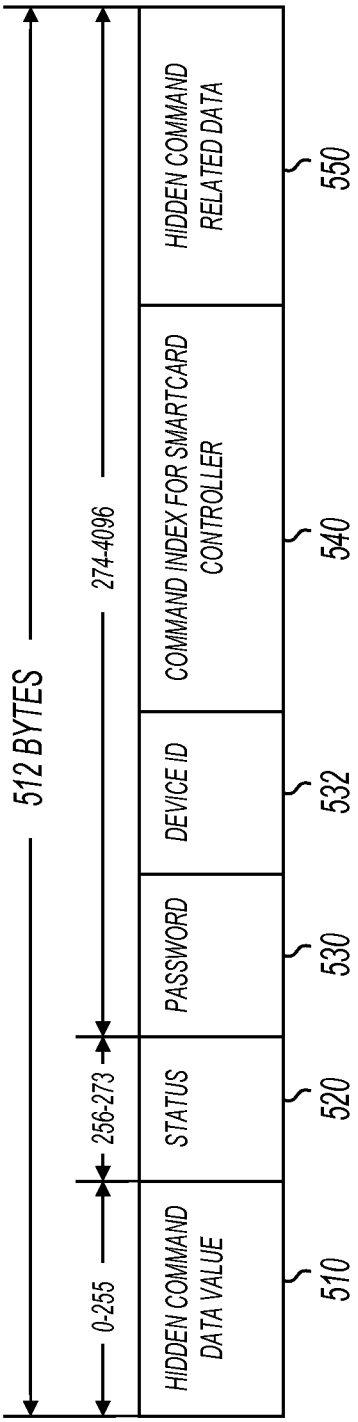
512 BYTES
0-255
256-273
274-4096
HIDDEN COMMAND DATA VALUE
STATUS
PASSWORD
DEVICE ID
COMMAND INDEX FOR SMARTCARD CONTROLLER
HIDDEN COMMAND RELATED DATA
510
520
530
532
540
550

FIG. 5

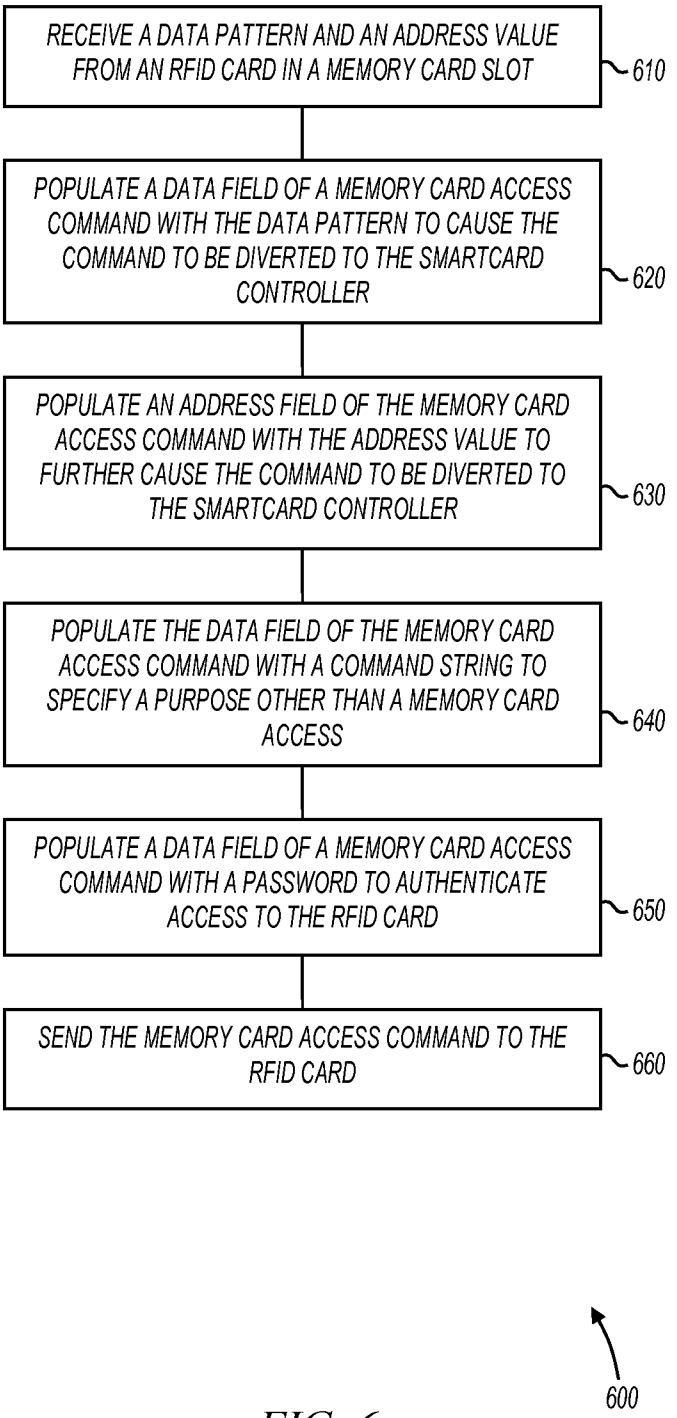
RECEIVE A DATA PATTERN AND AN ADDRESS VALUE FROM AN RFID CARD IN A MEMORY CARD SLOT
610
POPULATE A DATA FIELD OF A MEMORY CARD ACCESS COMMAND WITH THE DATA PATTERN TO CAUSE THE COMMAND TO BE DIVERTED TO THE SMARTCARD CONTROLLER
620
POPULATE AN ADDRESS FIELD OF THE MEMORY CARD ACCESS COMMAND WITH THE ADDRESS VALUE TO FURTHER CAUSE THE COMMAND TO BE DIVERTED TO THE SMARTCARD CONTROLLER
630
POPULATE THE DATA FIELD OF THE MEMORY CARD ACCESS COMMAND WITH A COMMAND STRING TO SPECIFY A PURPOSE OTHER THAN A MEMORY CARD ACCESS
640
POPULATE A DATA FIELD OF A MEMORY CARD ACCESS COMMAND WITH A PASSWORD TO AUTHENTICATE ACCESS TO THE RFID CARD
650
SEND THE MEMORY CARD ACCESS COMMAND TO THE RFID CARD
660
600

FIG. 6

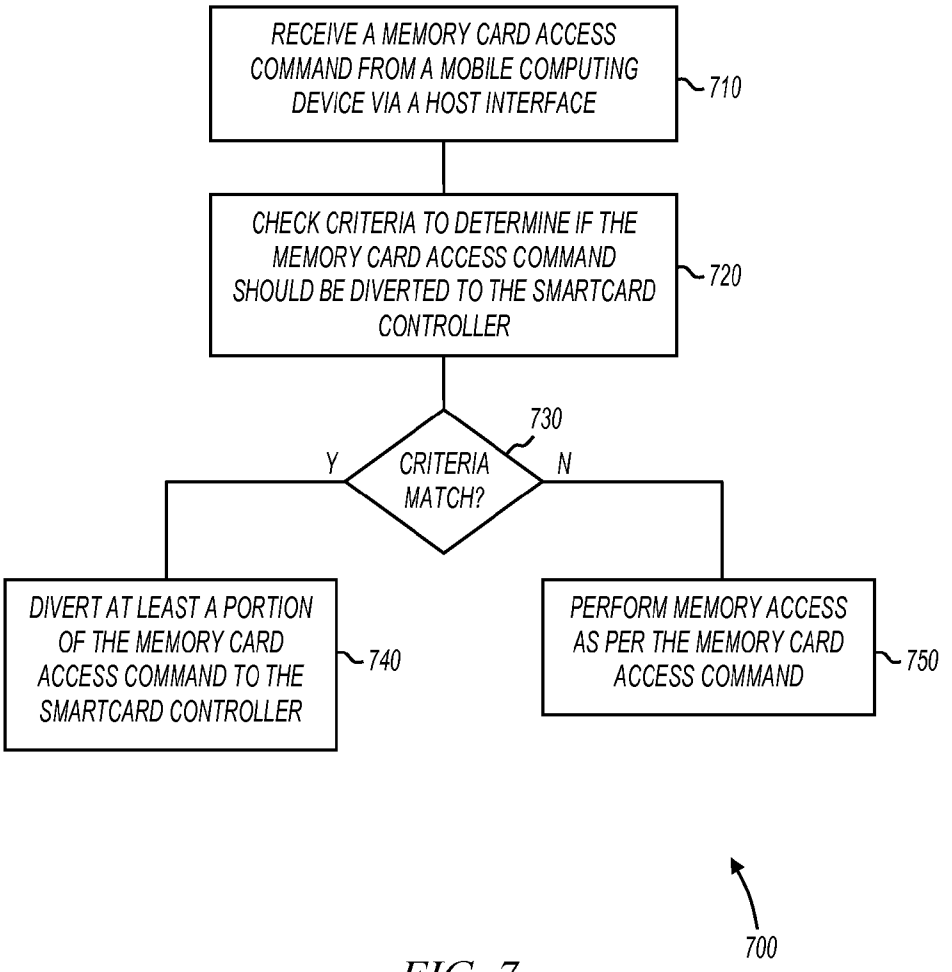
RECEIVE A MEMORY CARD ACCESS COMMAND FROM A MOBILE COMPUTING DEVICE VIA A HOST INTERFACE
710
CHECK CRITERIA TO DETERMINE IF THE MEMORY CARD ACCESS COMMAND SHOULD BE DIVERTED TO THE SMARTCARD CONTROLLER
720
730
CRITERIA MATCH?
Y
N
DIVERT AT LEAST A PORTION OF THE MEMORY CARD ACCESS COMMAND TO THE SMARTCARD CONTROLLER
740
PERFORM MEMORY ACCESS AS PER THE MEMORY CARD ACCESS COMMAND
750
700

FIG. 7

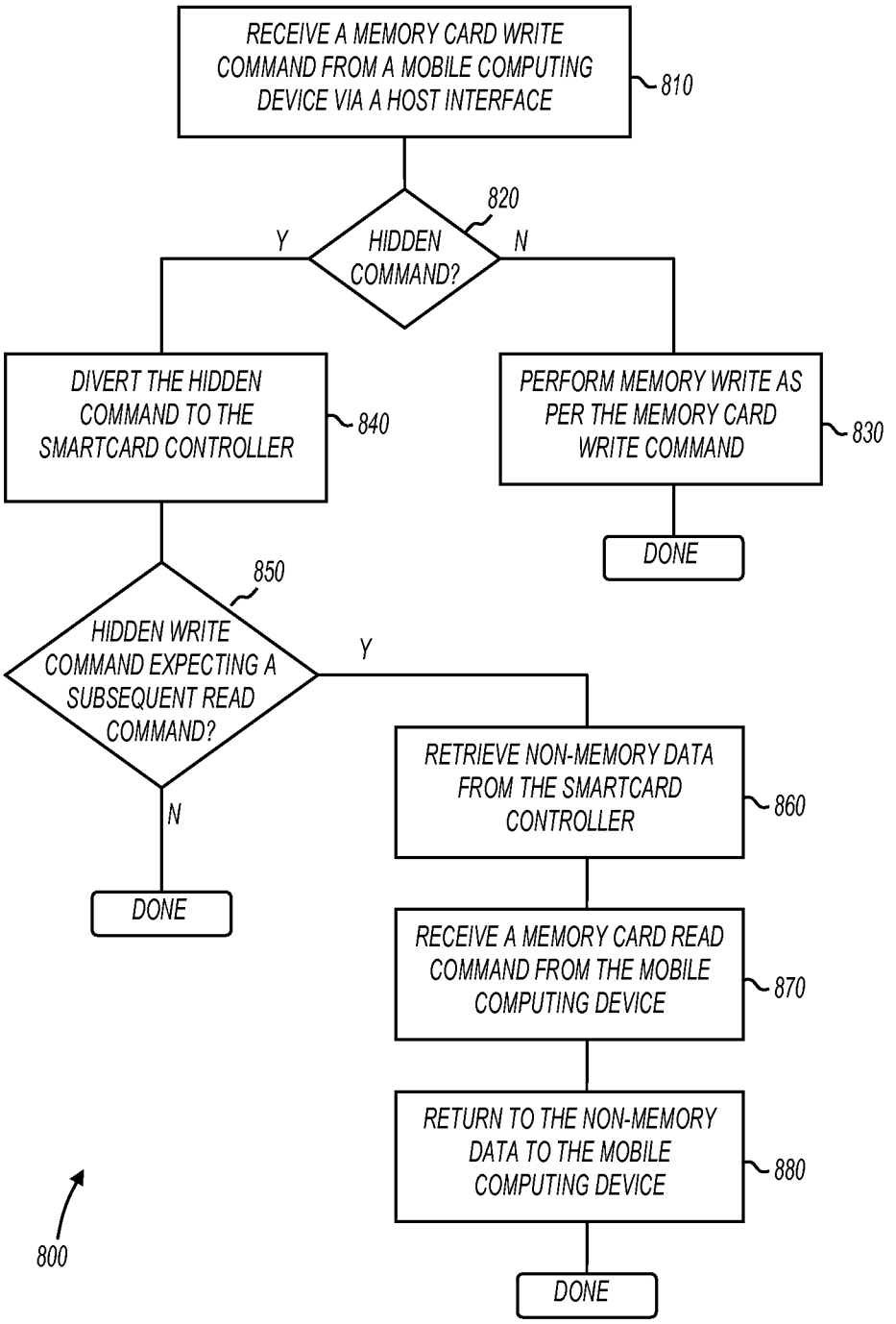
RECEIVE A MEMORY CARD WRITE COMMAND FROM A MOBILE COMPUTING DEVICE VIA A HOST INTERFACE
810
HIDDEN COMMAND?
820
Y
N
DIVERT THE HIDDEN COMMAND TO THE SMARTCARD CONTROLLER
840
PERFORM MEMORY WRITE AS PER THE MEMORY CARD WRITE COMMAND
830
DONE
HIDDEN WRITE COMMAND EXPECTING A SUBSEQUENT READ COMMAND?
850
Y
N
DONE
RETRIEVE NON-MEMORY DATA FROM THE SMARTCARD CONTROLLER
860
RECEIVE A MEMORY CARD READ COMMAND FROM THE MOBILE COMPUTING DEVICE
870
RETURN TO THE NON-MEMORY DATA TO THE MOBILE COMPUTING DEVICE
880
DONE
800

FIG. 8

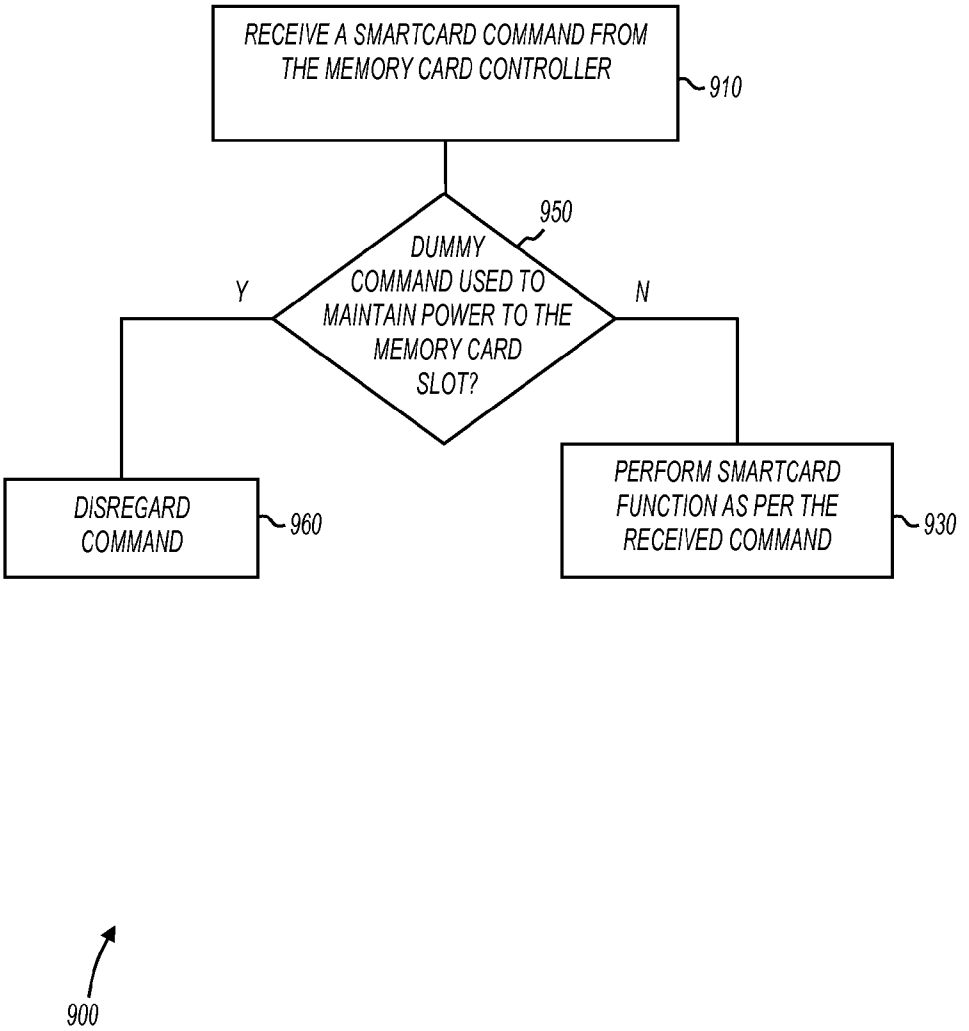
RECEIVE A SMARTCARD COMMAND FROM THE MEMORY CARD CONTROLLER
910
950
DUMMY COMMAND USED TO MAINTAIN POWER TO THE MEMORY CARD SLOT?
Y
N
DISREGARD COMMAND
960
PERFORM SMARTCARD FUNCTION AS PER THE RECEIVED COMMAND
930
900

FIG. 9

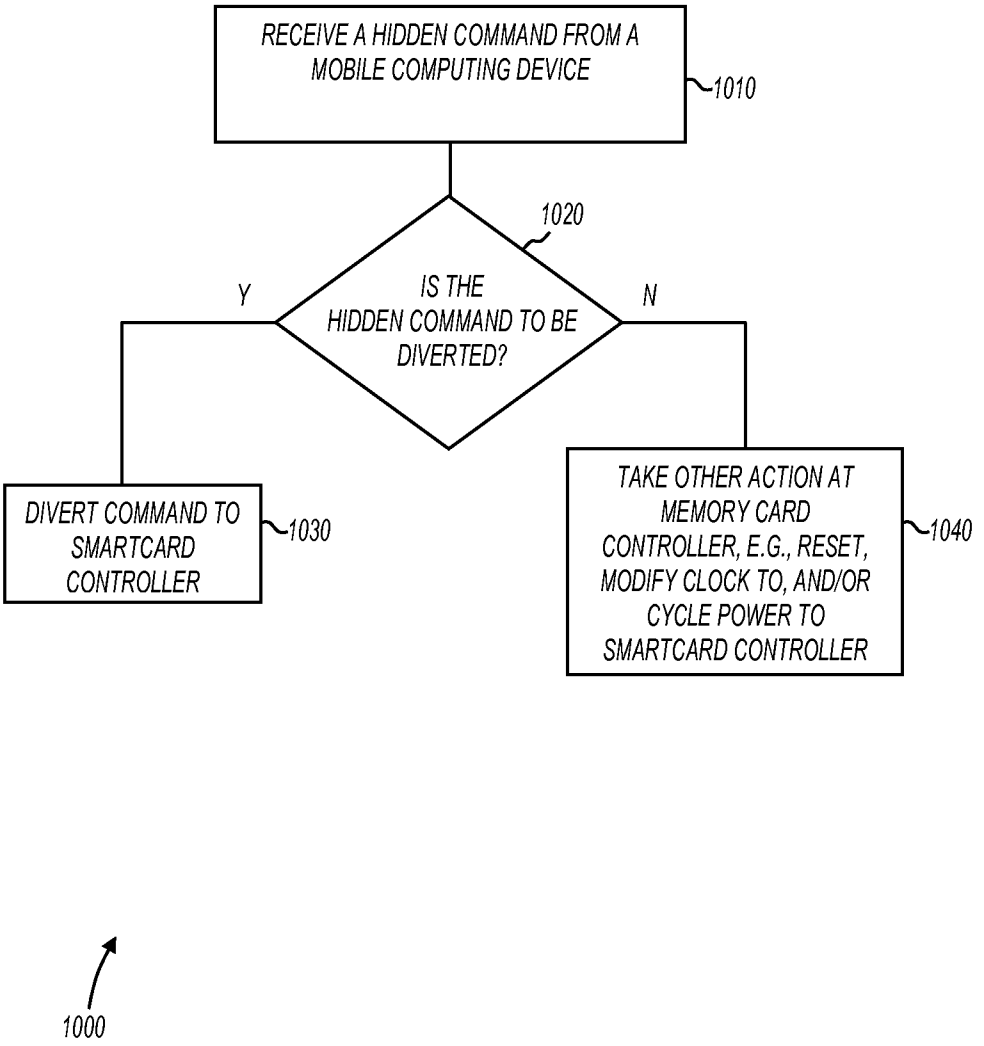
RECEIVE A HIDDEN COMMAND FROM A MOBILE COMPUTING DEVICE
1010
1020
IS THE HIDDEN COMMAND TO BE DIVERTED?
Y
N
DIVERT COMMAND TO SMARTCARD CONTROLLER
1030
TAKE OTHER ACTION AT MEMORY CARD CONTROLLER, E.G., RESET, MODIFY CLOCK TO, AND/OR CYCLE POWER TO SMARTCARD CONTROLLER
1040
1000

FIG. 10

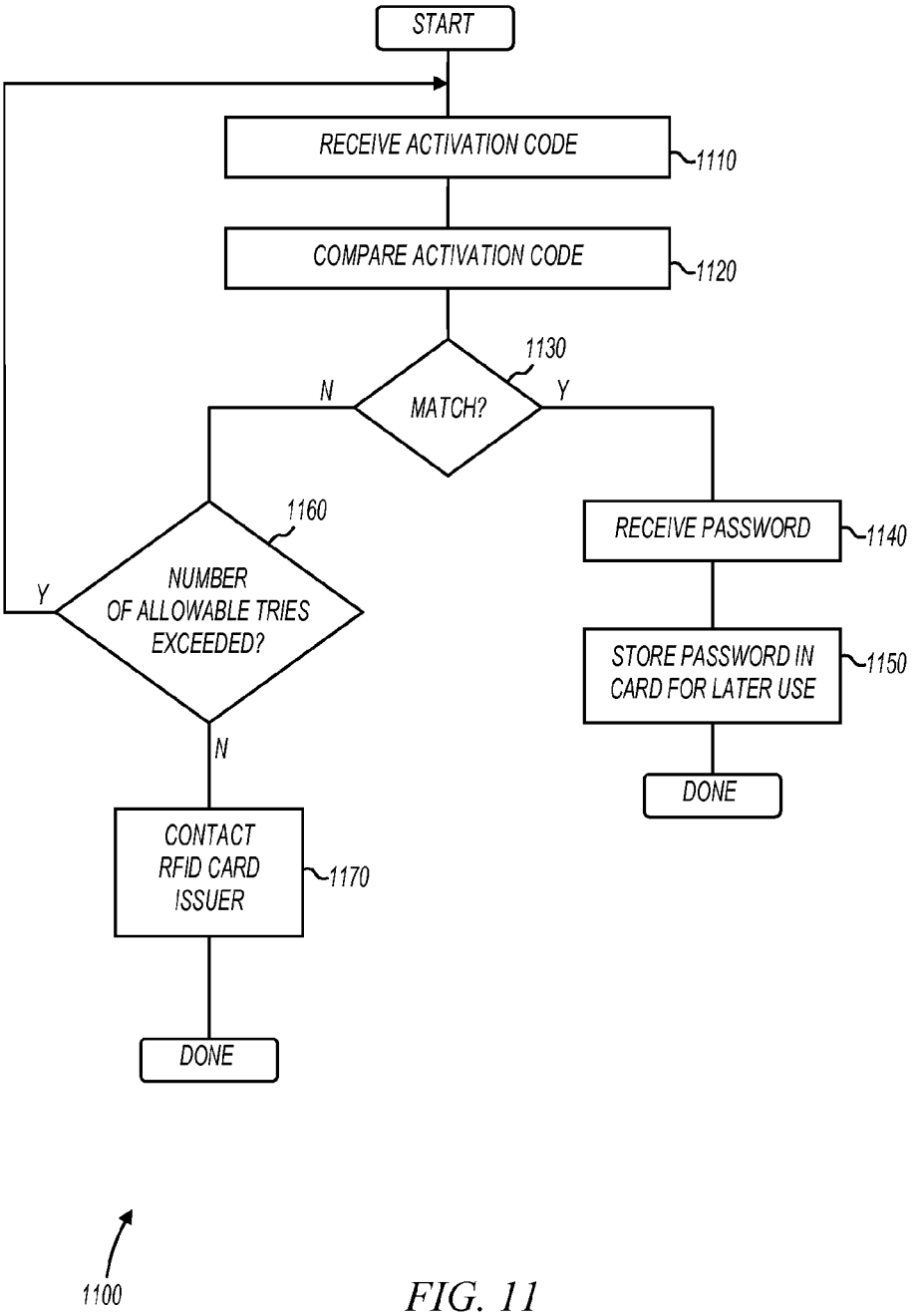
START
RECEIVE ACTIVATION CODE
1110
COMPARE ACTIVATION CODE
1120
1130
MATCH?
N
Y
1160
NUMBER OF ALLOWABLE TRIES EXCEEDED?
Y
N
RECEIVE PASSWORD
1140
STORE PASSWORD IN CARD FOR LATER USE
1150
DONE
CONTACT RFID CARD ISSUER
1170
DONE
1100

FIG. 11

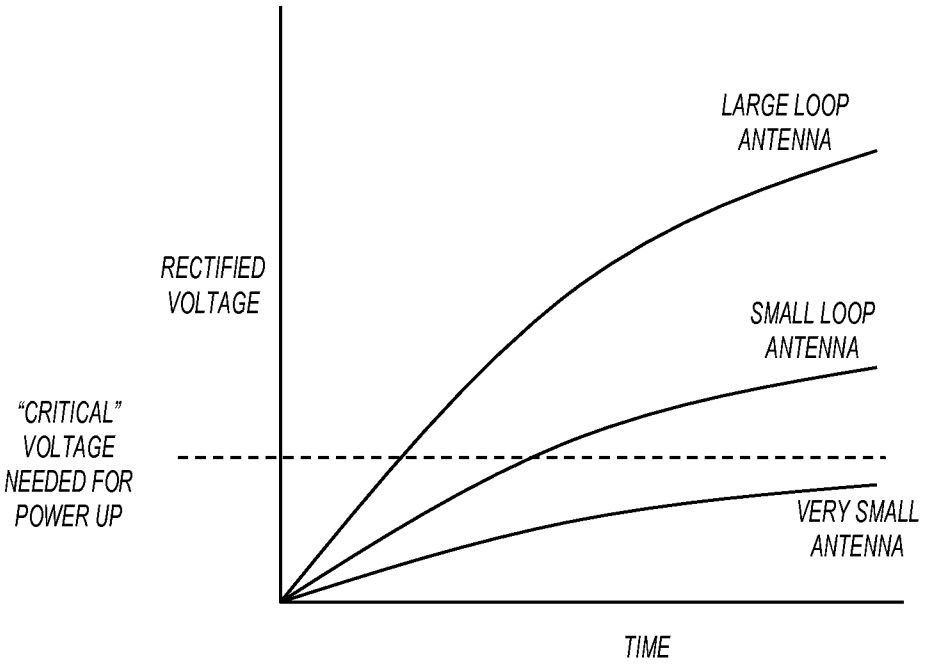

FIG. 12
(PRIOR ART)

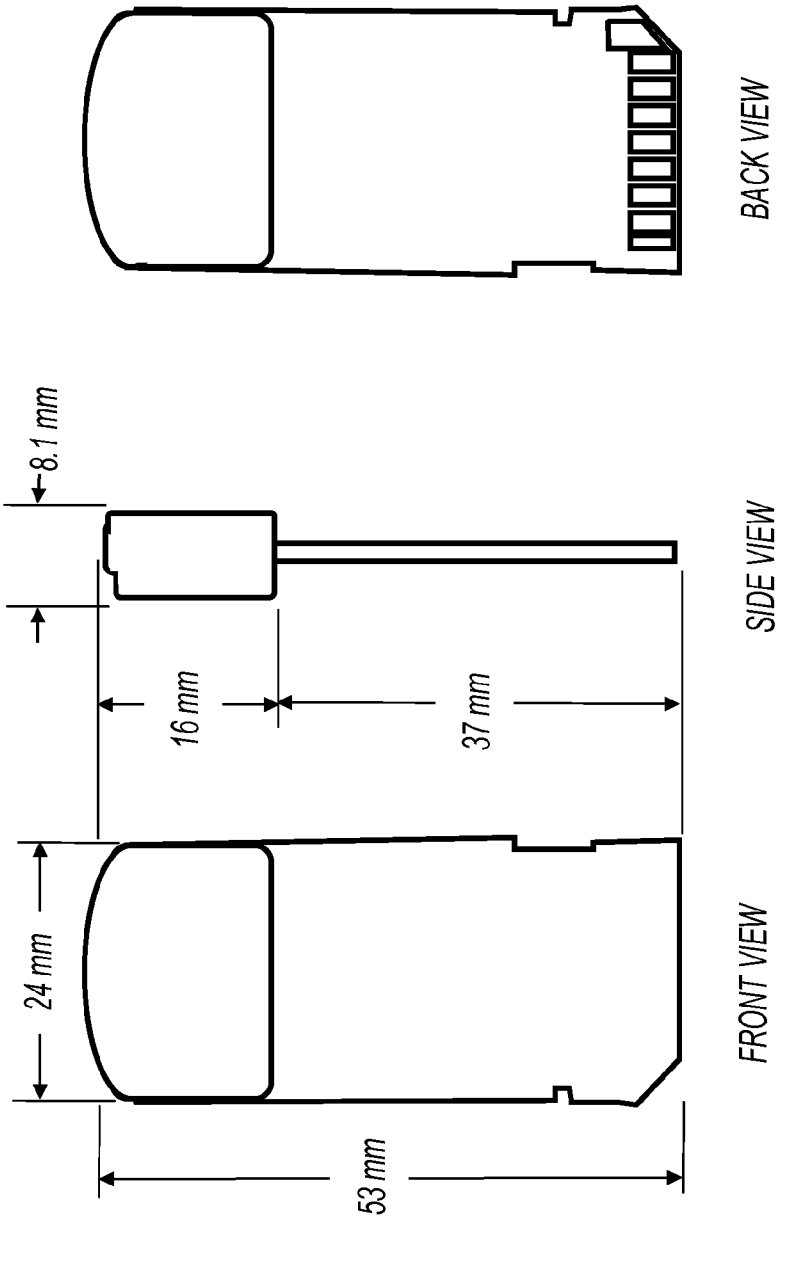

FIG. 13
(PRIOR ART)

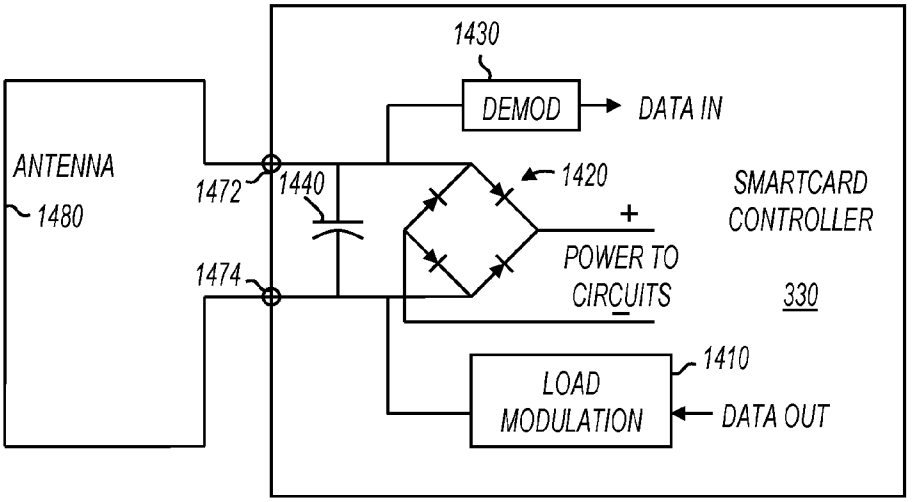

FIG. 14
(PRIOR ART)

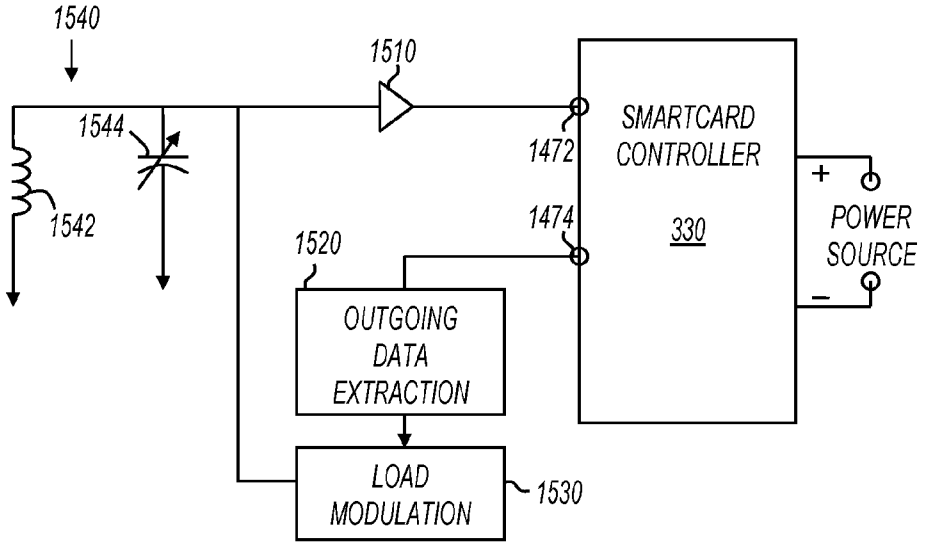

FIG. 15

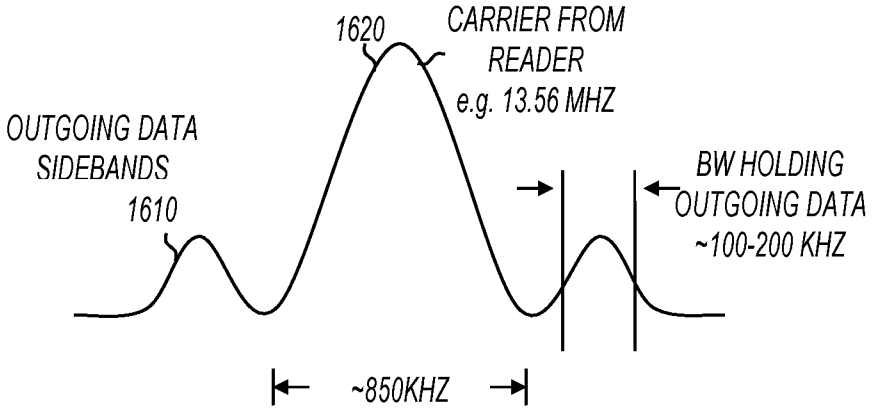
1620
CARRIER FROM
READER
e.g. 13.56 MHZ
OUTGOING DATA
SIDEBANDS
1610
BW HOLDING
OUTGOING DATA
~100-200 KHZ
~850KHZ

FIG. 16

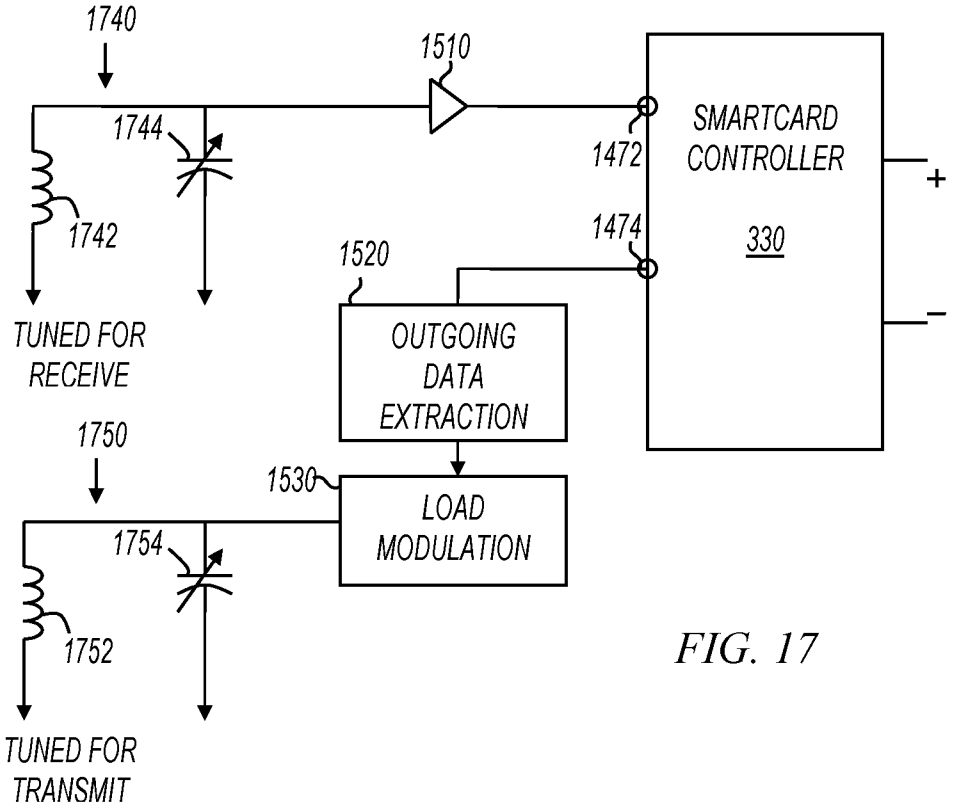
1740
1510
1744
1472
SMARTCARD
CONTROLLER
+
1742
1474
330
1520
−
TUNED FOR
RECEIVE
OUTGOING
DATA
EXTRACTION
1750
1530
LOAD
MODULATION
1754
1752
TUNED FOR
TRANSMIT

FIG. 17

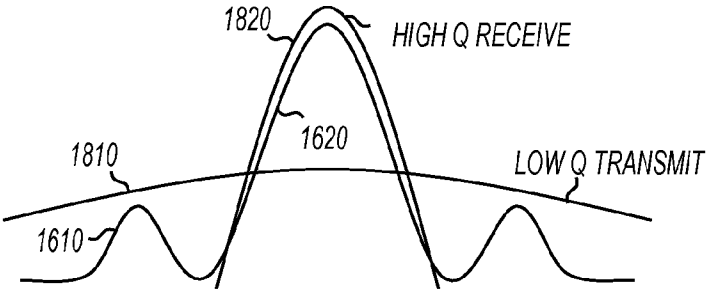
1820
HIGH Q RECEIVE
1620
1810
LOW Q TRANSMIT
1610

FIG. 18

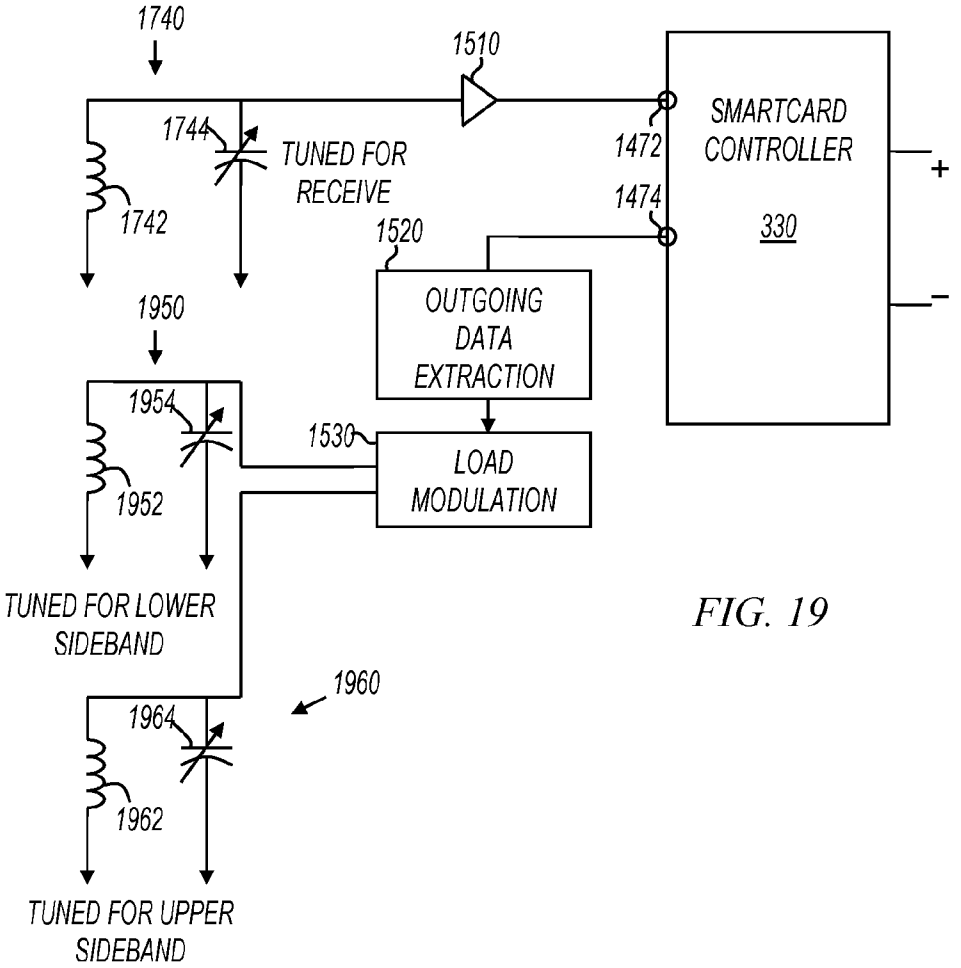
1740
1510
SMARTCARD
CONTROLLER
330
1744
TUNED FOR
RECEIVE
1472
1474
+
1742
1520
OUTGOING
DATA
EXTRACTION
–
1950
1954
1530
LOAD
MODULATION
1952
TUNED FOR LOWER
SIDEBAND
1960
1964
1962
TUNED FOR UPPER
SIDEBAND

FIG. 19

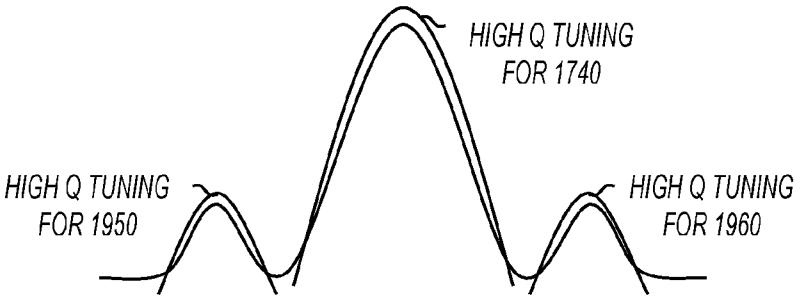
HIGH Q TUNING
FOR 1740
HIGH Q TUNING
FOR 1950
HIGH Q TUNING
FOR 1960

FIG. 20

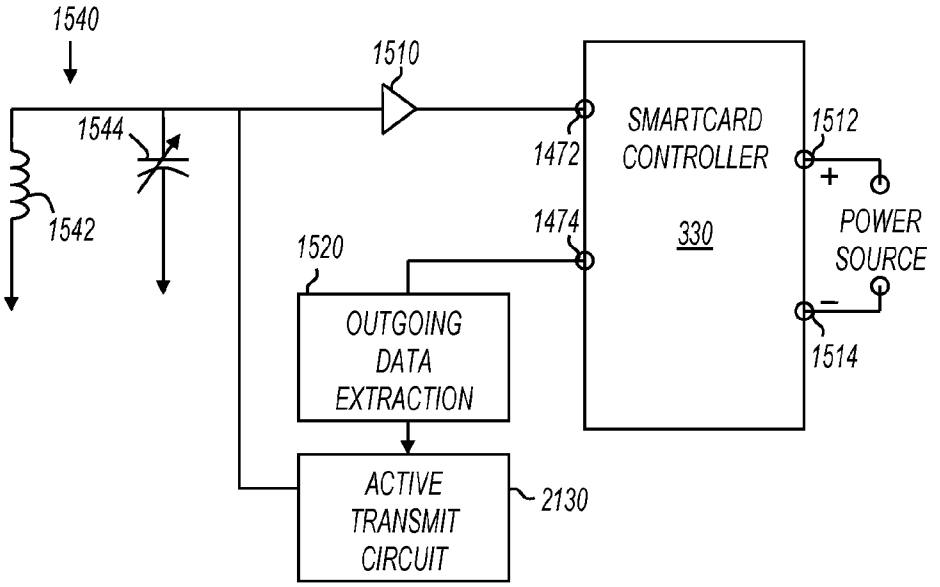
1540
1510
1544
1542
1472
SMARTCARD
CONTROLLER
330
1512
+
POWER
SOURCE
−
1514
1474
1520
OUTGOING
DATA
EXTRACTION
ACTIVE
TRANSMIT
CIRCUIT
2130

FIG. 21

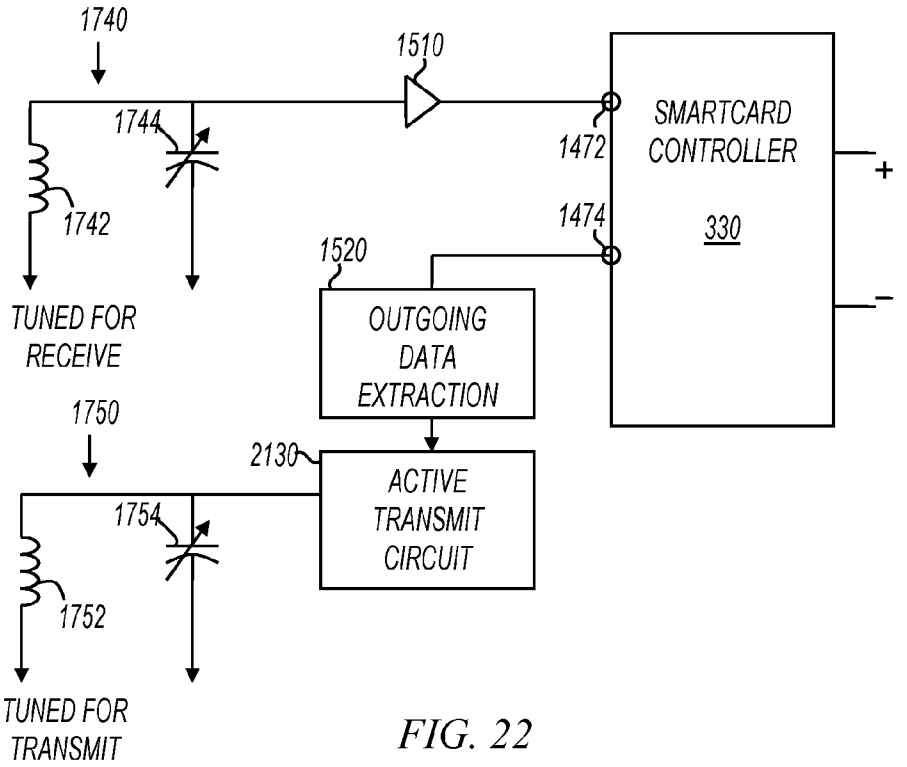
1740
1510
1744
1472
SMARTCARD
CONTROLLER
+
1742
1474
330
1520
–
TUNED FOR
RECEIVE
OUTGOING
DATA
EXTRACTION
1750
2130
ACTIVE
TRANSMIT
CIRCUIT
1754
1752
TUNED FOR
TRANSMIT

FIG. 22

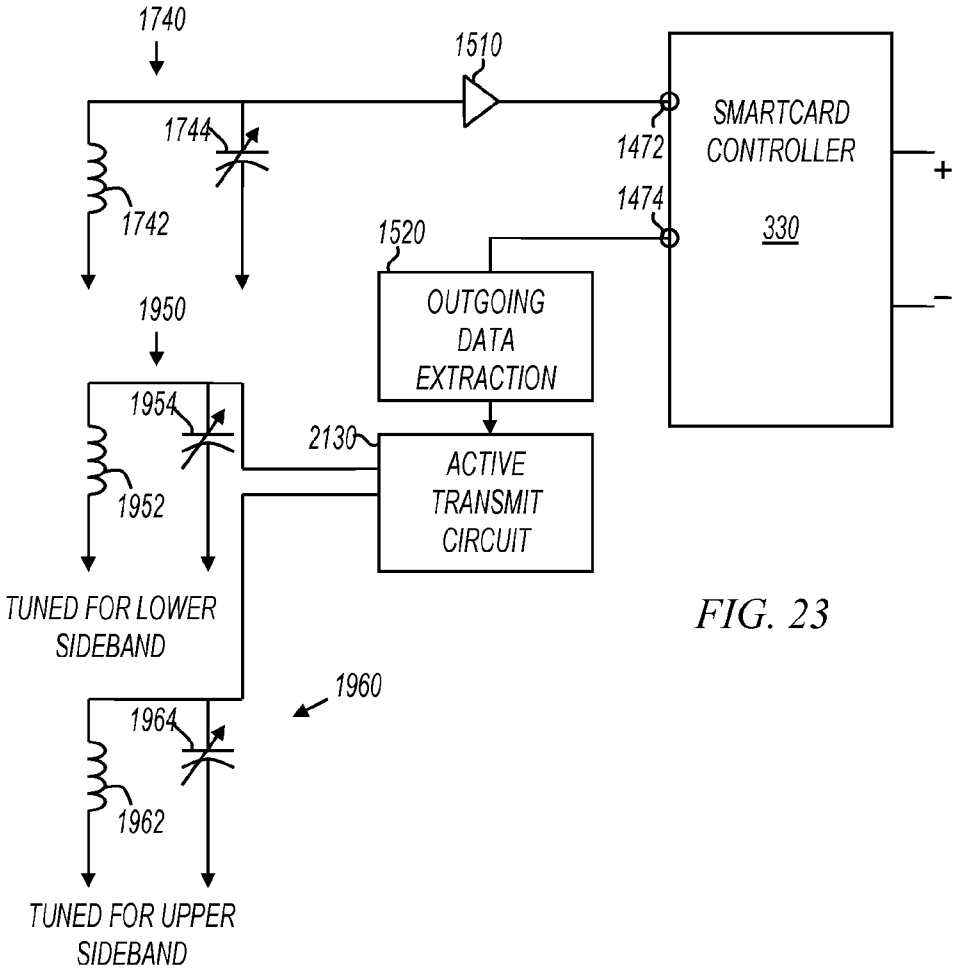
1740
1510
1744
1742
1472
SMARTCARD
CONTROLLER
330
+
1474
1520
OUTGOING
DATA
EXTRACTION
−
1950
1954
2130
ACTIVE
TRANSMIT
CIRCUIT
1952
TUNED FOR LOWER
SIDEBAND
1960
1964
1962
TUNED FOR UPPER
SIDEBAND

FIG. 23

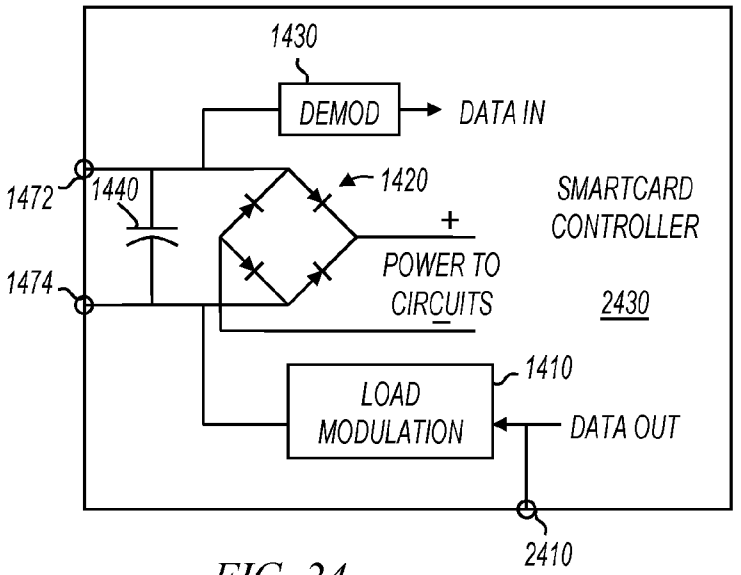
1430
DEMOD
DATA IN
1472
1440
1420
SMARTCARD
CONTROLLER
+
POWER TO
CIRCUITS
1474
2430
1410
LOAD
MODULATION
DATA OUT
2410

FIG. 24

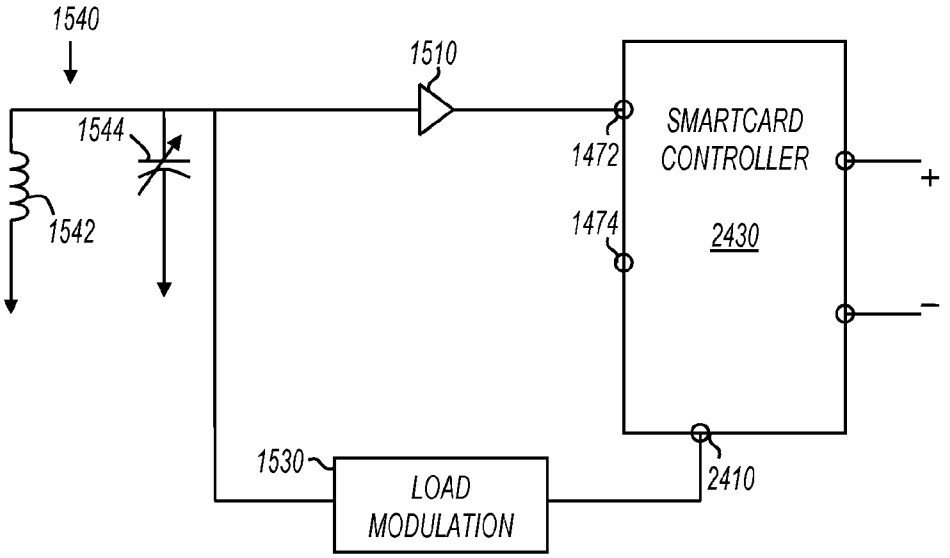
1540
1510
1544
SMARTCARD
CONTROLLER
1472
+
1542
1474
2430
−
1530
LOAD
MODULATION
2410

FIG. 25

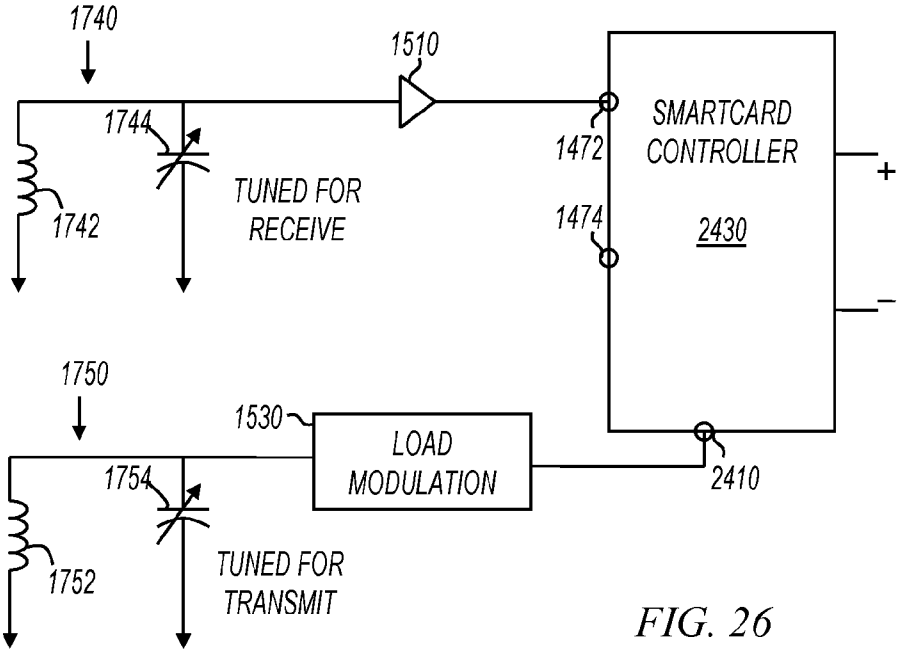
1740
1510
1744
1472
SMARTCARD
CONTROLLER
+
1742
TUNED FOR
RECEIVE
1474
2430
–
1750
1530
LOAD
MODULATION
1754
2410
1752
TUNED FOR
TRANSMIT

FIG. 26

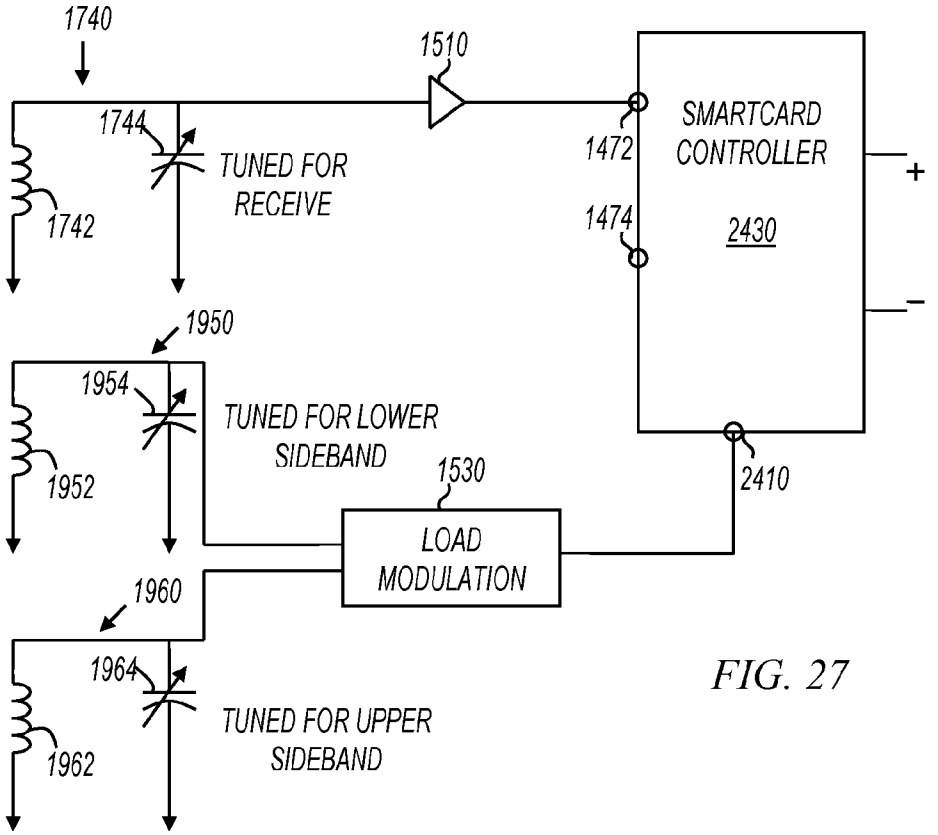
1740
1510
1744
1472
SMARTCARD
CONTROLLER
+
TUNED FOR
RECEIVE
1742
1474
2430
–
1950
1954
TUNED FOR LOWER
SIDEBAND
1952
1530
2410
LOAD
MODULATION
1960
1964
TUNED FOR UPPER
SIDEBAND
1962

FIG. 27

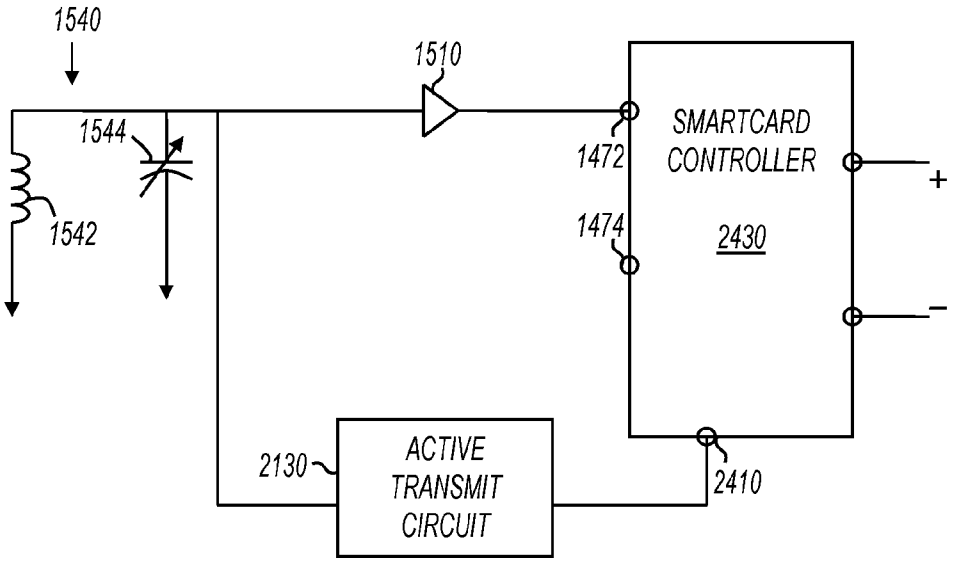
1540
1510
1544
1542
1472
1474
SMARTCARD
CONTROLLER
2430
+
−
2130
ACTIVE
TRANSMIT
CIRCUIT
2410

FIG. 28

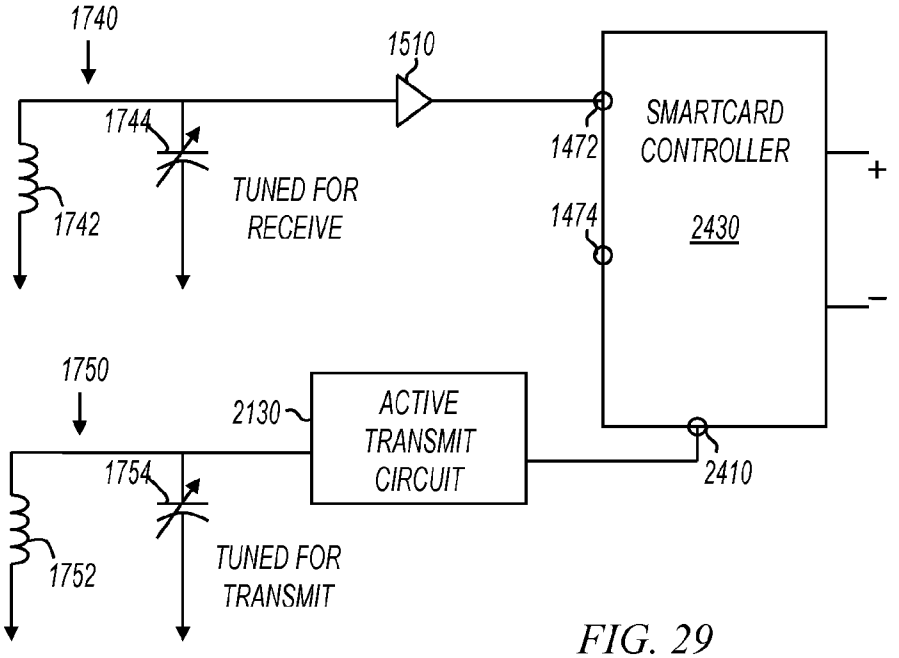
1740
1510
1744
1742
TUNED FOR
RECEIVE
1472
1474
SMARTCARD
CONTROLLER
2430
+
−
1750
2130
ACTIVE
TRANSMIT
CIRCUIT
2410
1754
1752
TUNED FOR
TRANSMIT

FIG. 29

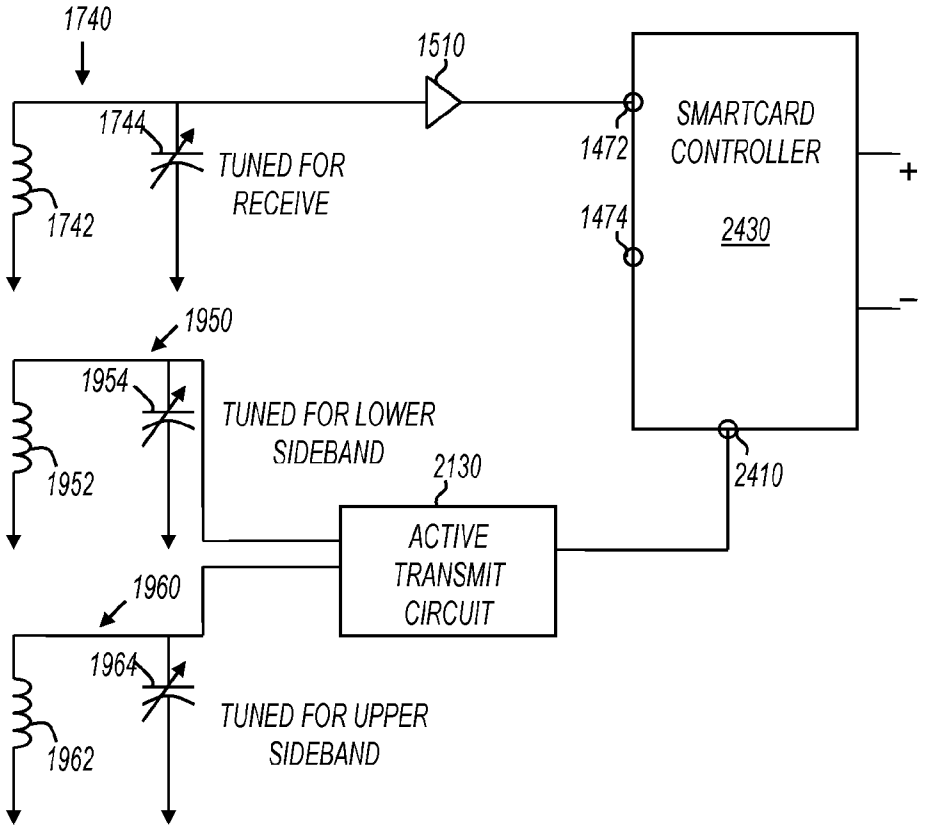
1740
1510
1744
TUNED FOR
RECEIVE
1742
1472
SMARTCARD
CONTROLLER
2430
1474
+
−
1950
1954
TUNED FOR LOWER
SIDEBAND
1952
2130
2410
ACTIVE
TRANSMIT
CIRCUIT
1960
1964
TUNED FOR UPPER
SIDEBAND
1962

FIG. 30

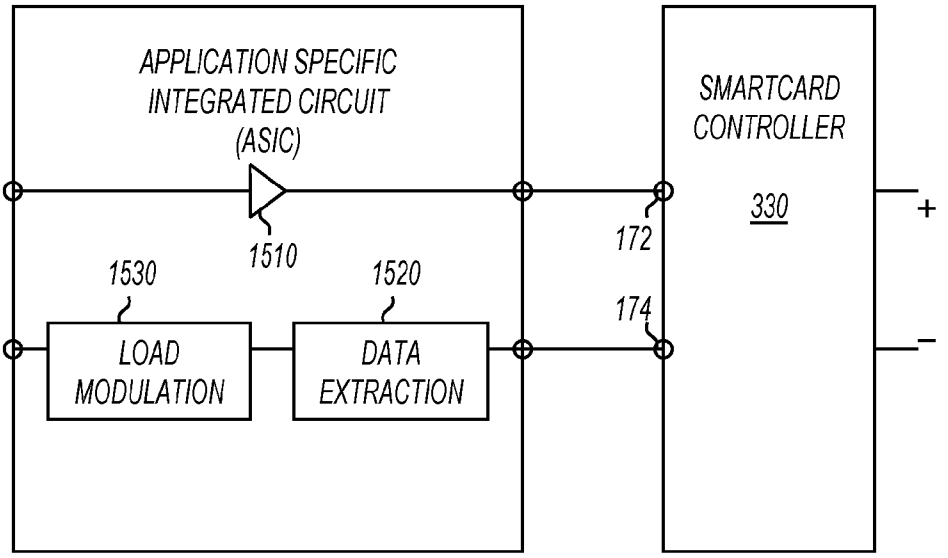
APPLICATION SPECIFIC
INTEGRATED CIRCUIT
(ASIC)
1510
1530
1520
LOAD
MODULATION
DATA
EXTRACTION
172
174
SMARTCARD
CONTROLLER
330
+
–

FIG. 31

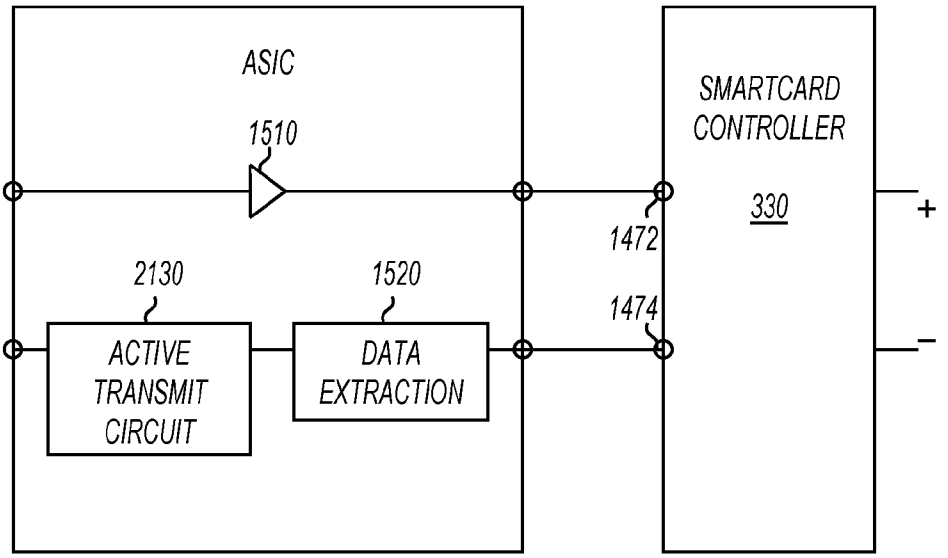
ASIC
1510
2130
1520
ACTIVE
TRANSMIT
CIRCUIT
DATA
EXTRACTION
1472
1474
SMARTCARD
CONTROLLER
330
+
–

FIG. 32

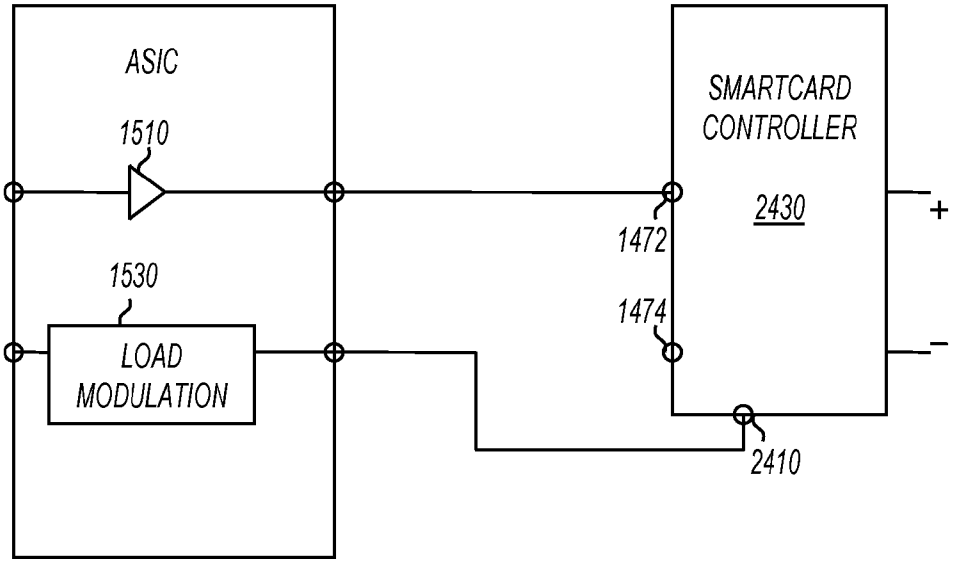
ASIC
1510
1530
LOAD
MODULATION
SMARTCARD
CONTROLLER
2430
1472
1474
2410
+
–

FIG. 33

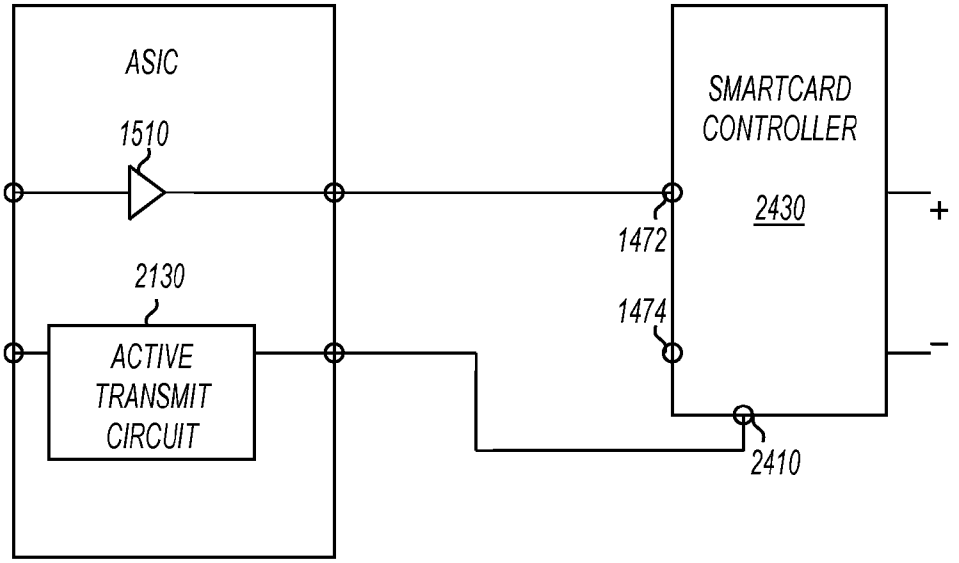
ASIC
1510
2130
ACTIVE
TRANSMIT
CIRCUIT
SMARTCARD
CONTROLLER
2430
1472
1474
2410
+
–

FIG. 34

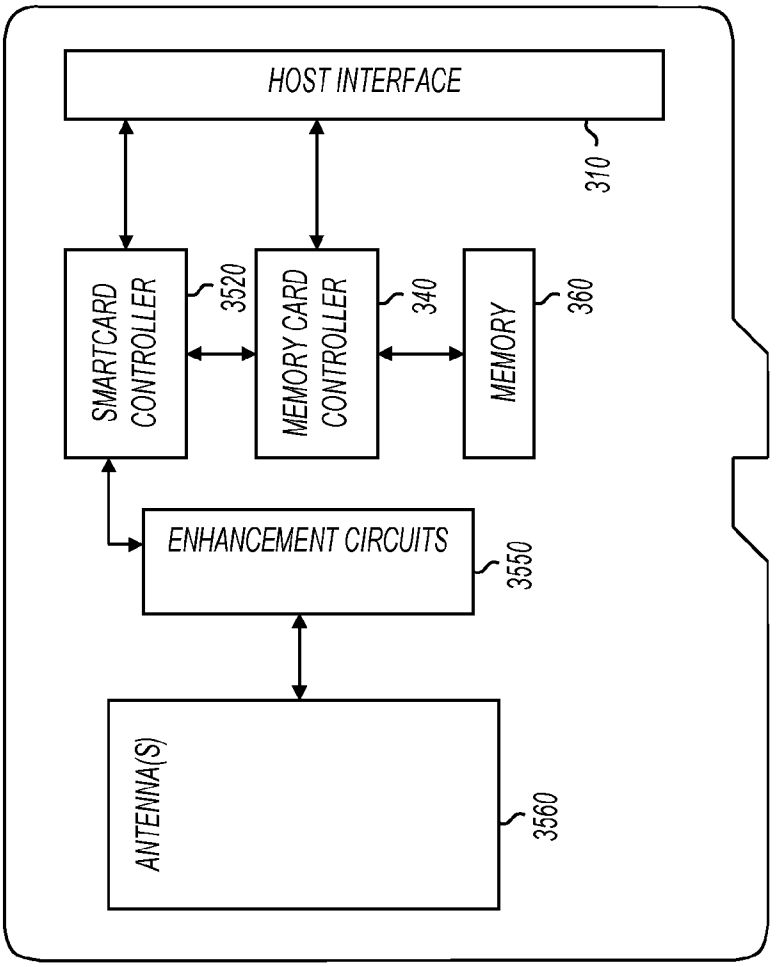
HOST INTERFACE
310
SMARTCARD CONTROLLER
3520
MEMORY CARD CONTROLLER
340
MEMORY
360
ENHANCEMENT CIRCUITS
3550
ANTENNA(S)
3560

FIG. 35

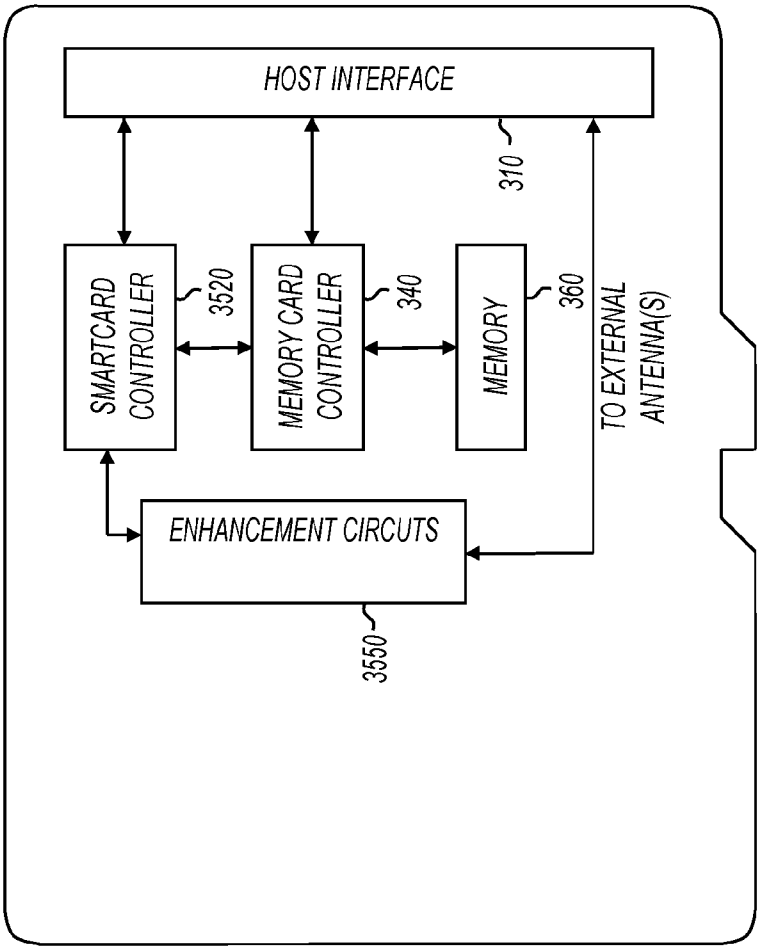
SMARTCARD CONTROLLER
3520
ENHANCEMENT CIRCUTS
3550
HOST INTERFACE
310
MEMORY CARD CONTROLLER
340
MEMORY
360
TO EXTERNAL ANTENNA(S)

FIG. 36

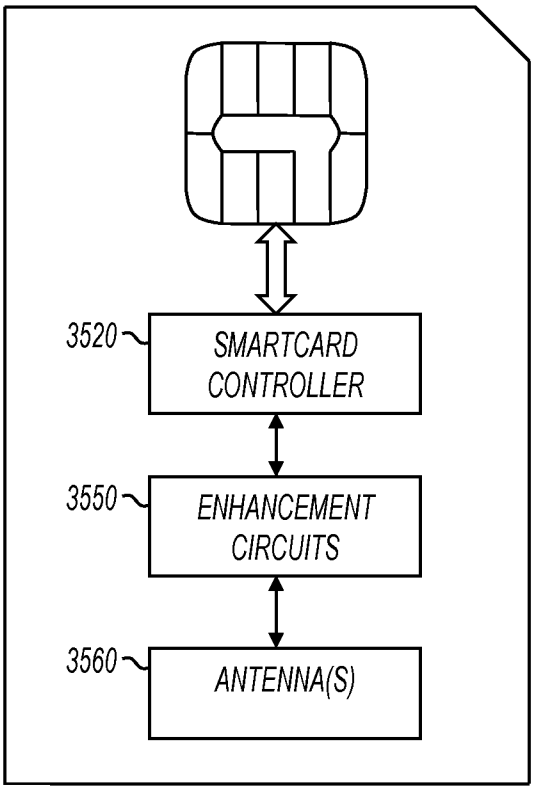
3520
SMARTCARD CONTROLLER
3550
ENHANCEMENT CIRCUITS
3560
ANTENNA(S)

FIG. 37

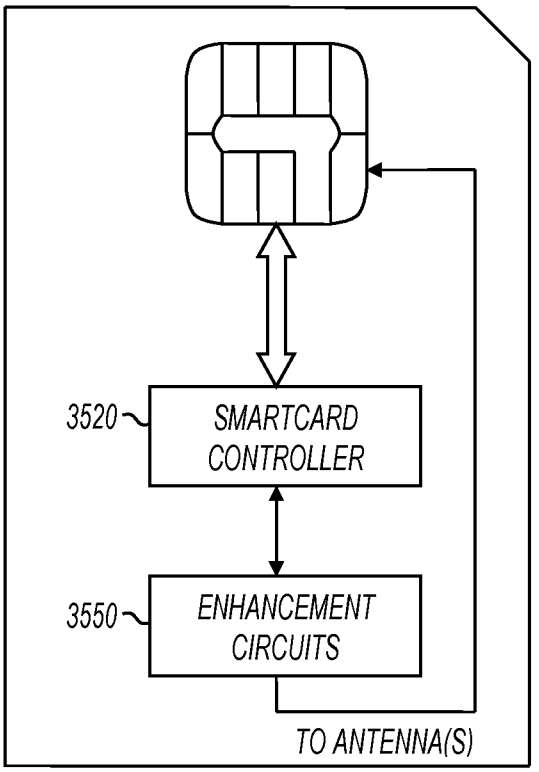
3520
SMARTCARD CONTROLLER
3550
ENHANCEMENT CIRCUITS
TO ANTENNA(S)

FIG. 38

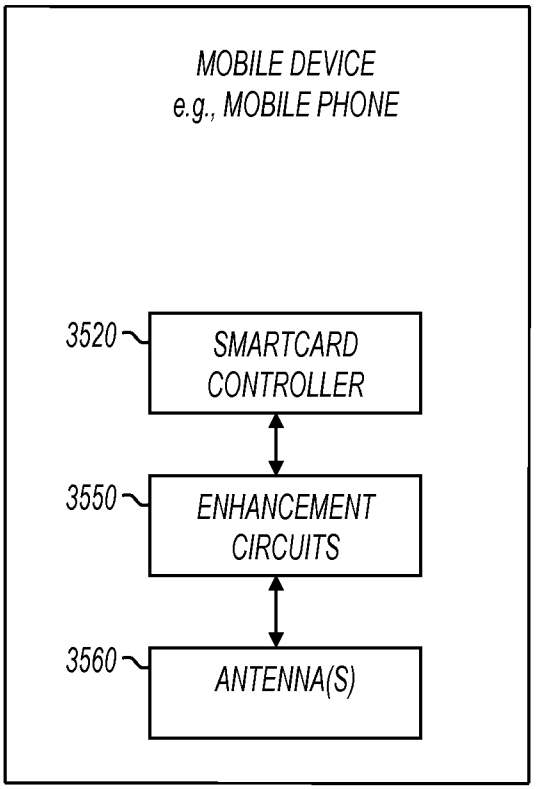
MOBILE DEVICE
e.g., MOBILE PHONE
3520
SMARTCARD CONTROLLER
3550
ENHANCEMENT CIRCUITS
3560
ANTENNA(S)

FIG. 39

13.56 MHZ ENHANCEMENT CIRCUIT FOR SMARTCARD CONTROLLER

FIELD

The present invention relates generally to contactless communications devices, and more specifically to contactless smartcard devices.

BACKGROUND

RFID "tags" can be separated into two broad categories: active tags and passive tags. Active tags are characterized by a local power source such as a battery. Active tags generally transmit information by broadcasting on an RF carrier frequency of choice using a locally generated RF carrier. Active tags are typically used to transmit over long distances, often referred to as "far field communications" (FFC). Antennas used with active RFID tags tend to be large to allow for the communications over long distances.

Passive tags are not powered. Passive tags derive the energy needed to power the tag from an interrogating RF field, and use that energy to transmit response codes by modulating the impedance that the antenna presents to the interrogating field, thereby modulating the signal reflected back to the reader antenna. Passive tags are typically used to transmit over short distances, often referred to as "near field communications" (NFC). For example, passive tags operating at 13.56 MHz are typically designed to communicate with RFID readers a few centimeters away.

Passive tags are typically connected to "loop antennas." One example of a loop antenna is shown in U.S. Pat. No. 6,568,600, issued to Carpier et al. on May 27, 2003 (the '600 patent). The device described in the '600 patent is recognizable as a "credit card sized" passive RFID card (more specifically, a card that conforms to ISO 7816 size requirements). The loop antenna is necessarily large because passive tags are powered using energy received by the antenna from signals transmitted by the RFID reader.

FIG. **12** shows a power supply voltage developed over time by rectifying a voltage induced in a loop antenna in the presence of an interrogating RF field. Once the power supply voltage reaches a critical value, the tag is powered up and can operate. As the antenna size is reduced, it takes longer for the power supply voltage to reach the critical value, and the tag operation may not meet response time specifications. Below a certain antenna size, the power supply voltage may never reach the critical value, and the tag may never power up.

Antenna design for RFID applications is described in a Microchip Technology, Inc. application note entitled "Antenna Circuit Design for RFID Applications" by Youbok Lee, Ph.D., published in 2003 (no month given). Dr. Lee's application note describes in great detail how to determine size requirements for a passive RFID tag antenna to operate at 13.56 MHz. On page **5** of the application note, Dr. Lee shows that the optimum radius of the loop antenna coil is equal to 1.414 times the required read range. This analysis confirms that for a read range on the order of a few centimeters, a credit card sized loop antenna can be made near optimal.

Passive tags are seeing widespread use in many applications. For example, mobile device manufacturers are embedding passive RFID tags in mobile devices for NFC applications. Example mobile applications include, but are not limited to, ticketing and mobile payments. U.S. Pat. No. 7,333,062 issued to Leizerovich et al. on Feb. 19, 2008 (the '062 patent) shows a mobile phone with an integrated loop antenna for an NFC device. As shown in the '062 patent, the mobile phone provides the real estate necessary to implement a loop antenna at 13.56 MHz.

There have been attempts to implement passive tags in smaller mobile devices. These attempts have met with limited success due in part to the size of the loop antenna. For example, FIG. **13** shows an RFID tag implementation in a secure digital (SD) memory card manufactured by Wireless Dynamics, Inc. of Calgary, Alberta Canada. Card **1300** includes an antenna, but the SD card is significantly oversized as a result. Also for example, U.S. Patent Application Publication No.: US 2006/0124755 A1 shows a memory card having a passive tag, but the card must be inserted into a slot to access a loop antenna on a different device. In this implementation, mobile device real estate is still relied upon for loop antenna implementation. It can be seen, therefore, that the size of antennas are proving to be a barrier to further miniaturization of passive RFID tags.

FIG. **14** shows a prior art smartcard controller and antenna in combination. Smartcard controller **330** includes a contactless interface that includes two pads **1472** and **1474** intended for connection to a coil (antenna **1480**). Smartcard controller **330** also includes bridge rectifier **1420** to rectify an alternating voltage present on pads **1472** and **1474** when antenna **1480** is inductively coupled to another device and in the presence of an interrogating RF field. Capacitor **1440** is typically tuned to create a resonant circuit at the frequency of interest (e.g., 13.56 MHz). When antenna **1480** is a large loop antenna, then bridge rectifier **1420** provides power to internal circuits as shown in FIG. **12**. Demodulator **1430** demodulates data present in the interrogating RF field, and load modulation driver circuit **1410** modulates an impedance seen by the device presenting the interrogating RF field when the coil (antenna **1480**) is inductively coupled to a separate device that is presenting the interrogating RF field. This creates a half-duplex communications path between the device presenting the interrogating RF field and smartcard controller **330**. Examples of smartcard controllers are the "SmartMX" controllers sold by NXP Semiconductors N.V. of Eindhoven, The Netherlands.

A need exists for a small footprint RFID tag that does not rely on an external device to house an antenna. A need also exists for a memory card compatible RFID tag that is compatible with standard memory card slots on mobile devices.

BRIEF DESCRIPTION OF THE DRAWINGS

FIG. **1** shows a mobile computing device and a small RFID card compatible with a memory card slot;

FIG. **2** shows a block diagram of a mobile computing device;

FIGS. **3A-3B** show block diagrams of memory card compatible RFID cards with integrated inductive elements;

FIG. **4** shows a memory card compatible RFID card with an integrated inductive element;

FIG. **5** shows a data portion of a memory card write command;

FIG. **6-11** show flowcharts of methods in accordance with various embodiments of the present invention;

FIG. **12** shows a power supply voltage developed over time by rectifying a voltage induced in a loop antenna in the presence of an interrogating RF field;

FIG. **13** shows a prior art RFID tag implementation in a secure digital (SD) memory card;

FIG. **14** shows a prior art smartcard controller and antenna in combination;

FIG. **15** shows a smartcard controller with performance enhancement circuits including a load modulation driver circuit and a single antenna in accordance with various embodiments of the present invention;

FIG. **16** shows frequency spectrum used in RFID communications;

FIG. **17** shows a smartcard controller with performance enhancement circuits including a load modulation driver circuit and separate receive and transmit antennas in accordance with various embodiments of the present invention;

FIG. **18** shows frequency spectrum used in RFID communications;

FIG. **19** shows a smartcard controller with performance enhancement circuits including a load modulation driver circuit and multiple transmit antennas in accordance with various embodiments of the present invention;

FIG. **20** shows frequency spectrum used in RFID communications;

FIG. **21** shows a smartcard controller with performance enhancement circuits including an active transmit driver circuit and a single antenna in accordance with various embodiments of the present invention;

FIG. **22** shows a smartcard controller with performance enhancement circuits including an active transmit driver circuit and separate receive and transmit antennas in accordance with various embodiments of the present invention;

FIG. **23** shows a smartcard controller with performance enhancement circuits including an active transmit driver circuit and multiple transmit antennas in accordance with various embodiments of the present invention;

FIG. **24** shows a smartcard controller with a pad to provide digital data output;

FIG. **25** shows a smartcard controller with digital data output and performance enhancement circuits including a load modulation driver circuit and a single antenna in accordance with various embodiments of the present invention;

FIG. **26** shows a smartcard controller with digital data output and performance enhancement circuits including a load modulation driver circuit and separate receive and transmit antennas in accordance with various embodiments of the present invention;

FIG. **27** shows a smartcard controller with digital data output and performance enhancement circuits including a load modulation driver circuit and multiple transmit antennas in accordance with various embodiments of the present invention;

FIG. **28** shows a smartcard controller with digital data output and performance enhancement circuits including an active transmit driver circuit and a single antenna in accordance with various embodiments of the present invention;

FIG. **29** shows a smartcard controller with digital data output and performance enhancement circuits including an active transmit driver circuit and separate receive and transmit antennas in accordance with various embodiments of the present invention;

FIG. **30** shows a smartcard controller with digital data output and performance enhancement circuits including an active transmit driver circuit and multiple transmit antennas in accordance with various embodiments of the present invention;

FIGS. **31-34** show performance enhancing application specific integrated circuits (ASICs) coupled to various smartcard controllers in accordance with various embodiments of the present invention;

FIG. **35** shows a memory card with integrated smartcard controller, performance enhancement circuits and antennas in accordance with various embodiments of the present invention;

FIG. **36** shows a memory card with integrated smartcard controller and performance enhancement circuits in accordance with various embodiments of the present invention;

FIG. **37** shows a subscriber identity module (SIM) card with integrated smartcard controller, performance enhancement circuits and antennas in accordance with various embodiments of the present invention;

FIG. **38** shows a subscriber identity module (SIM) card with integrated smartcard controller and performance enhancement circuits in accordance with various embodiments of the present invention; and

FIG. **39** shows a mobile device with a smartcard controller, enhancement circuits, and antenna(s).

DESCRIPTION OF EMBODIMENTS

In the following detailed description, reference is made to the accompanying drawings that show, by way of illustration, various embodiments of an invention. These embodiments are described in sufficient detail to enable those skilled in the art to practice the invention. It is to be understood that the various embodiments of the invention, although different, are not necessarily mutually exclusive. For example, a particular feature, structure, or characteristic described in connection with one embodiment may be implemented within other embodiments without departing from the spirit and scope of the invention. In addition, it is to be understood that the location or arrangement of individual elements within each disclosed embodiment may be modified without departing from the spirit and scope of the invention. The following detailed description is, therefore, not to be taken in a limiting sense, and the scope of the present invention is defined only by the appended claims, appropriately interpreted, along with the full range of equivalents to which the claims are entitled. In the drawings, like numerals refer to the same or similar functionality throughout the several views.

FIG. **1** shows a mobile computing device and a small RFID card compatible with a memory card slot. Mobile computing device **110** is shown as a mobile phone in FIG. **1**, but this is not a limitation of the present invention. For example, mobile computing device **110** may be a personal digital assistant (PDA), a smartphone, a mobile phone, a handheld computer, a desktop computer, or any other device capable of operating as described herein.

Mobile computing device **110** includes memory card slot **112**. Memory card slot **112** is a slot capable of accepting RFID card **120**. For example, memory card slot **112** may have physical dimensions compatible with RFID card **120**, and may have a communications interface that operates using a protocol compatible with RFID card **120**. In some embodiments of the present invention, memory card slot **112** is a memory card slot designed to accept and communicate with memory cards. As used herein, the term "memory card slot" refers to any add-on slot capable of accepting a card having memory accessible by a mobile computing device such as that shown in FIG. **1**. For example, a memory card slot may be compatible with an industry standard communications protocol, or may be compatible with a widely accepted communications protocol that is not necessarily formally documented as an industry standard. Examples include slots that are compatible with the Multimedia Memory Card (MMC) protocol, Memory Stick DUO protocol, secure digital (SD) protocol, and Smart Media protocol. The foregoing list is

meant to be exemplary, and not exhaustive. Memory card slot **112** may be compatible with many memory card slot protocols other than those explicitly listed above without departing from the scope of the invention. Further, in some embodiments, memory card slot **112** accepts a subscriber identity module (SIM) card. Memory card slot **112** may be exposed on an edge of mobile computing device **110** as shown, or may be behind a cover. For example, memory card slot **112** may be behind a battery cover, behind a battery, or anywhere else on mobile computing device **110**.

RFID card **120** includes electrical contacts **122** as part of a host interface that communicates with memory card slot **112**. For example, electrical contacts **122** may provide connectivity compliant with a communications protocol for memory cards. RFID card **120** includes RFID functionality, and may also include memory accessible by mobile computing device **110**. For example, in some embodiments, RFID card **120** includes a smartcard controller and an inductive element capable of interacting with an NFC reader (e.g., an ISO 14443 compliant interface). In other embodiments, RFID card **120** does not include memory accessible by mobile computing device **110**. RFID card **120** may include functionality beyond memory and RFID. Electrical contacts **122** may also be compliant with a smartcard "contact" interface (e.g., ISO 7816).

In various embodiments of the present invention, the RFID functionality in RFID card **120** is accessed by mobile computing device **110** using memory card access commands already defined for use in memory card slot **112**. Accordingly, the various embodiments of the present invention enable the implementation of RFID functions beyond memory accesses without defining new commands. In some embodiments, new commands for the RFID card are embedded inside the data bits subsequent to memory card read/write commands. RFID card **120** then decides if the incoming data bits are meant for regular read/write memory functions or for RFID functions. In other words, functions in addition to standard memory card functions may be accessed through commands "hidden" in the data stream that can be exchanged using existing memory card access commands and functions. According to the various embodiments of the invention, both existing memory card functions and RFID functions may be implemented without requiring changes in how the host protocol is built.

The combination of mobile computing device **110** and RFID card **120** may be used for any purpose. For example, in some embodiments, RFID card **120** may interact with a point-of-sale payment device to effect mobile payments. Also for example, in some embodiments, RFID card **120** may be used in wave-and-pay ticketing in mass transit environments, such as MIFARE.

FIG. **2** shows a block diagram of a mobile computing device. Mobile computing device **110** includes antenna **240**, radio circuits **230**, processor **210**, memory **220**, and memory card slot **112**. In some embodiments, mobile computing device **110** is a mobile phone, or includes mobile phone functionality. For example, antenna **240** and radio circuits **230** may be utilized to communicate with a cellular telephone network. Further, in some embodiments, mobile computing device **110** is a wireless local area network (WLAN) or wireless wide area network (WWAN) device. For example, antenna **240** and radio circuits **230** may be utilized to communicate with a wireless access point. In some embodiments, antenna **240** and radio circuits **230** are omitted, and mobile computing device **110** does not utilize wireless connectivity.

Processor **210** represents a processor capable of communicating with the other blocks shown in mobile computing device **110**. For example, processor **210** may be a microprocessor, a digital signal processor (DSP), a microcontroller, or the like. Further, processor **210** may be formed from state machines or other sequential logic. In operation, processor **210** may read instructions from memory **220** and perform actions in response thereto. For example, processor **210** may execute program instructions that influence communications between mobile computing device **110** and a device coupled to memory card slot **112**.

Memory card slot **112** is described above with reference to FIG. **1**. Memory card slot **112** includes circuitry compatible with RFID card **120**. Mobile computing device **110** may communicate with RFID card **120** by using a standard set of memory card access commands. For example, processor **210** may use memory card write commands to write to memory in RFID card **120**, and may use memory card read commands to read from memory in RFID card **120**. Mobile computing device **110** may also communicate with RFID card **120** using a ISO 7816 compatible interface or the like. For example, when RFID card **120** is a SIM card, mobile computing device **110** may communicate with a smartcard controller within the SIM card.

Mobile computing device **110** may access the RFID functionality in RFID card **120** using "hidden" commands embedded in memory card access commands. For example, a memory card write command may include a unique data string to identify the memory card write command as a command to be diverted for purposes other than a memory write. In addition, the sector address provided with the memory card write command may be set to a particular address value to further identify the memory card write command as a command to be diverted. In addition to specific address/data values to identify the memory card access command as a command to be diverted for a purpose other than a memory access, the memory access command may include data bits to further specify the type and function of hidden command. Example formats of hidden commands are described further below. In some embodiments, a read command is issued right after a write command to enable data flow from the non-memory card functions to the host, where the write command's data had the hidden commands. The combination of a memory card write command and a memory card read command can be used in this manner to form a hidden read command.

In some embodiments, memory card slot **112** is powered down after periods of inactivity to save power. For example, memory card slot **112** may be powered up when processor **210** issues a memory card write or read command, but may then be powered down to save power. When memory card slot **112** is powered down, any device coupled to the memory card slot is also powered down. For example, if RFID card **120** (FIG. **1**) is coupled to the memory card slot, then RFID card **120** is powered down when memory card slot **112** is powered down.

In various embodiments of the present invention, processor **210** executes software resident in memory **220** to maintain power to memory card slot **112** (and to RFID card **120**). For example, periodic hidden commands may be sent to RFID card **120** for the purpose of keeping power applied while RFID card **120** is expected to be providing RFID functionality. Also for example, a hidden command may be sent to RFID card **120** for the purpose of cycling power to a smartcard controller resident on the card. These hidden commands are described further below with respect to later figures.

FIG. **3**A shows a block diagram of a memory card compatible RFID card with an integrated inductive element. RFID card **300** represents possible embodiments of RFID card **120** (FIG. **1**). RFID card **300** includes host interface **310**, memory card controller **340**, memory **360**, smartcard controller **340**, program memory **332**, and small inductive element **350**.

RFID card **300** is capable of communicating with a memory card slot in a mobile computing device. Further, RFID card **300** does not require memory card slots to implement extended input/output functions. For example, and not by way of limitation, in SD and micro SD embodiments, RFID card **300** is operable in any SD or microSD memory card slot, and does not require a secure digital input output (SDIO) memory card slot.

Host interface **310** includes electrical contacts to interface with a memory card slot. For example, host interface **310** includes contacts such as contacts **122** (FIG. **1**). Also for example, in some embodiments, host interface **310** includes recessed electrical contacts. Host interface **310** may also include circuitry such as drivers, receivers, terminations, and the like.

In embodiments represented by FIG. **3**A, memory card controller **340** communicates with the mobile device using memory card access commands. Memory card controller **340** also communicates with memory **360**. Memory card controller **340** determines whether each command should result in a memory operation with memory **360**, whether a hidden command should be diverted to smartcard controller **330**, or whether memory card controller **340** should take action in response to a hidden command. In some embodiments, memory card controller **340** executes instructions that are stored in an internal memory or stored in memory **360**. In some embodiments, memory card controller **340** includes special purpose hardware useful to determine whether a command should be diverted. In other embodiments, memory card controller **340** may be a microcontroller identical in all respects to a controller found in memory cards, except for the program that it executes.

Memory **360** may be any type of volatile or non-volatile memory. For example, memory **360** may be volatile memory such as static random access memory (SRAM) or dynamic random access memory (DRAM). Also for example, memory **360** may be nonvolatile memory such as NOR FLASH memory or NAND FLASH memory. In various embodiments of the present invention, memory **360** represents memory that is accessed by a mobile computing device using memory card access commands defined for that purpose.

When RFID card **300** is communicating with a memory card slot in a mobile computing device, the mobile computing device may send a memory card access command in order to access memory **360**. Also for example, the mobile computing device may send a memory card access command that contains a hidden command. Memory card controller **340** detects the presence of the hidden command, and diverts all or a portion of the memory access command to smartcard controller **330** using communication bus **342**. Communication bus **342** may have any number of conductors and may take any form. For example, communication bus **342** may be a serial port, a parallel port, or may include multiple data conductors, multiple address conductors, and/or conductors to carry control signals such as clock signals. In some embodiments, memory card controller **340** takes one or more actions in response to a hidden command. For example, memory card controller **340** may modify clock signals in response to a hidden command.

Memory card controller **340** can detect the hidden command in many ways. For example, in some embodiments, the memory card access command may include a specific address value or a specific data value. Memory card controller **340** detects commands that include one or both of the specific address value or specific data value and routes the command appropriately. The specific address value and specific data value used for this purpose are referred to herein as the hidden command address value and the hidden command data value.

In some embodiments, memory card controller **340** detects the presence of hidden commands based only on the hidden command address value. In these embodiments, memory card controller **340** checks the address value included in a memory card access command, and diverts the command (or takes some other action) if it matches the hidden command address value. In some embodiments, memory card controller **340** detects the presence of hidden commands based only on the hidden command data value. In these embodiments, memory card controller **340** checks a data value included in the memory card access command, and diverts all or a portion of the command if it matches the hidden command data value. In still further embodiments, memory card controller **340** detects the presence of hidden commands based on both the hidden command address value and the hidden command data value. In these embodiments, memory card controller **340** diverts the command only if both the memory card access address and data match the hidden command address value and data value, respectively.

The hidden command address value and hidden command data value may be specified in many ways. For example, all RFID cards may be issued with fixed values. In these embodiments, each time the RFID functions are accessed, the same hidden command address and/or data value is included in the memory card access command. Also for example, different RFID cards may be issued with unique values. In these embodiments, each RFID card may provide these values to a mobile computing device when queried. Also for example, hidden command address and/or data values may be specified by the mobile computing device. In still further embodiments, hidden command address and data values may be dynamic. The hidden command address and data values may change each time power is applied or on a periodic basis.

Smartcard controller **330** receives hidden commands diverted by memory card controller **340**. Smartcard controller **330** further interprets the hidden commands and performs actions in response thereto. Smartcard controller **330** executes instructions stored in program memory **332**. In some embodiments, program memory **332** is embedded in smartcard controller **330**, and in other embodiments, program memory **332** is part of memory **360**.

Smartcard controller **330** is a dual interface smartcard controller with one of the interfaces including RFID functionality. In some embodiments, smartcard controller **330** is compatible with passive RFID tag readers in NFC applications. For example, smartcard controller **330** may be a device capable of implementing all or part of the ISO 14443 standard for contactless NFC devices. Also for example, smartcard controller **330** may be a dual interface smartcard controller capable of implementing both ISO 7816 and ISO 14443 standards for contact/contactless requirements. The "SmartMX" family of controllers available from NXP Semiconductors N.V. of The Netherlands are examples of suitable dual interface smartcard controllers. These controllers provide RFID functionality at 13.56 MHz. The various embodiments of the present invention operate at 13.56 MHz, but are not limited to operation at this frequency. In some embodiments, smartcard controller interoperates with MIFARE systems for ticketing applications.

Smartcard controller **330** receives power from the host interface. By not receiving power from the interrogating RF field, the necessity of a loop antenna for power generation is negated. Smartcard controller **330** includes a contactless interface that in turn includes antenna port **334**. Antenna port **334** includes at least two pads for connection to an antenna,

shown as **1742** and **1744** in FIG. **14** and later figures. In FIG. **3**A, antenna port **334** is coupled to small inductive element **350**.

Small inductive element **350** includes a coil wound around a magnetic core. As described with reference to later figures, small inductive element may include one or more coils or antennas. The coil of small inductive element is too small to draw power from the interrogating RF field, but this is not necessary since smartcard controller **330** is powered by the host device through host interface **310**. Small inductive element **350** interacts with an antenna in an RFID reader similar to the way that primary and secondary coils in a transformer interact. The RFID reader has a coil resonant at 13.56 MHz functioning as the primary coil of a transformer. Small inductive element **350** functions as the secondary coil of the transformer. Accordingly, the transmitter "sees" the impedance of the secondary coil (small inductive element **350**). Smartcard controller **330** is able to modulate reflected RF signals using circuitry to modify the impedance at the antenna port **334**.

Small inductive element **350** can be made very small. For example, in some embodiments, RFID card **120** is a miniSD card, microSD card, or SIM card, and small inductive element **350** is small enough to be completely contained in the miniSD, microSD, or SIM form factor. A specific embodiment of a small inductive element in a memory card form factor is described below with reference to FIG. **4**.

In various embodiments of the invention, memory card controller **340** and smartcard controller **330** are implemented in many different ways. For example, in some embodiments, the various components are implemented in hardware. In these embodiments, the various components may be implemented as separate integrated circuits, or in a combined integrated circuit. Also for example, in some embodiments, the various components may be implemented in software, or in a combination of hardware and software. In some embodiments, RFID card **300** may include a microprocessor, and the components may be implemented as software modules running on the microprocessor. In other embodiments, RFID card **300** may include multiple processors, and the components may be implemented as software modules distributed across the multiple processors.

FIG. **3**B shows a block diagram of a memory card compatible RFID card with an integrated inductive element. RFID card **302** represents possible embodiments of RFID card **120** (FIG. **1**). RFID card **302** includes host interface **310**, memory card controller **340**, memory **360**, smartcard controller **340**, program memory **332**, and small inductive element **350**, all of which are described above with reference to FIG. **3**A. RFID card **302** is capable of communicating with a memory card slot in a mobile computing device. Further, RFID card **302** does not require memory card slots to implement extended input/output functions. For example, and not by way of limitation, in SD and microSD embodiments, RFID card **302** is operable in any SD or microSD memory card slot, and does not require a secure digital input output (SDIO) memory card slot.

In embodiments represented by FIG. **3**B, smartcard controller **330** receives power from memory controller **340**. In these embodiments, memory controller **340** has direct control over the power provided to smartcard controller **330**. Memory controller **340** may apply and/or remove power from smartcard controller **330** in response to commands received over the host interface. For example, memory controller **340** may receive a hidden command to reset smartcard controller **330** by causing a reboot through a power cycle.

FIG. **4** shows a memory card compatible RFID card with an integrated inductive element. RFID card **120** is shown in an SD card form factor, although this is not a limitation of the present invention. For example, other form factors within the scope of the present invention include, but are not limited to, microSD form factors and SIM card form factors. RFID card **120** includes electrical contacts **122**, memory card controller **340**, smartcard controller **330**, memory **360**, magnetic core **450**, and coil **452**, all affixed to circuit board **402**.

Magnetic core **450** and coil **452** implement small inductive element **350** (FIGS. **3**A, **3**B). As can be seen in FIG. **4**, the small inductive element fits entirely within the memory card form factor. The small inductive element does not provide power generation for smartcard controller **330**, and so does not need to be made large for that purpose.

FIG. **5** shows a data portion of a memory card write command. Included are hidden command data value **510**, status field **520**, password field **530**, device ID **532**, command index **540**, and hidden command related data **550**. In the example of FIG. **5**, the data portion is 512 bytes in length, although this is not a limitation of the present invention. Any amount of data may be included in the write command, and each field shown in FIG. **5** may be any length.

In the example of FIG. **5**, the hidden command data value is 256 bits long, although any length may be used without departing from the scope of the present invention. In some embodiments, hidden command data value **510** is used to identify a memory write command as a hidden command. When a write command is received having data in the first 256 bits that match the hidden command data value, the command is identified as one to be diverted to the smartcard controller. As described above, a hidden command address value may be used in conjunction with, or instead of, a hidden command data value to identify the memory write command as a hidden command.

The remaining fields have significance when the memory write is a hidden command. For example, if the first 256 bits do not match the hidden command data value (or if the write address does not match the hidden command address value, or both) then the remaining bits in the data field are to be treated as data in a normal memory write command. In contrast, when the memory write is a hidden command, the remaining fields are used to further interpret the hidden command.

Memory card controller **340** (FIGS. **3**, **4**) inspect the hidden command data value **510**, status field **520**, and possibly password field **530** and device ID **532**. In some embodiments, if the command is identified as a hidden command, memory card controller **340** forwards the password **530**, command index **540**, and related data **550** to smartcard controller **330**. In other embodiments, memory card controller **340** may directly take actions based on the hidden command.

Status field **520** may include any information relating to the status of the hidden command. For example, status field **520** may include one more bits to signify to memory card controller **340** whether the host (mobile computing device) is expecting the smartcard controller to return data in response to the hidden command. For example, when status field **520** signifies a write, memory card controller **340** forwards the password, device ID, command index, and related data without expecting to return any data to the host. Also for example, when status field **520** signifies a read, memory card controller **340** forwards the password, device ID, command index, and related data with the expectation that smartcard controller **330** will provide data to be sent to the host in response to a memory card read command. The combination of a memory card write command followed shortly thereafter by a memory card read command may be used to provide "read" function-

ality to the smartcard controller. Read operations from the smartcard controller are described further below with reference to FIG. **8**.

Password field **530** includes a password to allow smartcard controller **330** to authenticate the host to the RFID card. In some embodiments, every hidden command includes a password. Each time the password, device ID, command index, and related data is diverted to the smartcard controller, the password is checked to authenticate the host to the RFID card.

Device ID **532** uniquely identifies the host (mobile computing device). The device ID may be checked by the smartcard controller to ensure that the RFID card is inserted in the host to which it is authenticated. Some embodiments of the present invention enforce a unique host/card pairing using the device ID, and other embodiments allow smartcard controller functions to be accessed by any host.

Command index **540** identifies the type of hidden command. The number of possible hidden commands is limited only by the number of bits allocated thereto. Any number of bits may be allocated to command index **540** without departing from the scope of the present invention. Hidden command related data **550** may be utilized differently for each type of hidden command. Any number of bits may be used for hidden command related data **550**.

The data shown in FIG. **5** is provided as an example, and the data field of a memory card access command may include more or fewer data fields than those shown in FIG. **5**. The present invention is not limited by the number or content of the fields in a memory card access command.

FIG. **6** shows a flowchart in accordance with various embodiments of the present invention. In some embodiments, method **600** may be used by a mobile computing device to communicate with an RFID card in a memory card slot. In some embodiments, method **600**, or portions thereof, is performed by a mobile computing device with a memory card slot, and in other embodiments, method **600**, or portions thereof, is performed by software. The various actions in method **600** may be performed in the order presented, in a different order, or simultaneously. Further, in some embodiments, some actions listed in FIG. **6** are omitted from method **600**.

Method **600** begins at **610** in which a data pattern and an address value are received from an RFID card in a memory card slot. The data pattern corresponds to the hidden command data value, and the address value corresponds to the hidden command address value. In some embodiments, the mobile device only receives the data value and in other embodiments, the mobile device only receives the address value. In some embodiments, the actions of **610** may occur once when the RFID card is first inserted in the memory card slot. The mobile computing device may then use the address and data values each time it creates a hidden command. In other embodiments, the actions of **610** may occur each time the RFID card is inserted in the memory slot. In still further embodiments, the actions of **610** may occur periodically. Each time the actions **610** occur, the data pattern may be the same or different, and the address value may be the same or different.

At **620**, a data field of a memory card access command is populated with the data pattern to cause the command to be diverted to a smartcard controller on the RFID card. For example, the data pattern may be written to the data field as the hidden command data value **510** (FIG. **5**).

At **630**, an address field of the memory card access command is populated with the address value to further cause the command to be diverted to the smartcard controller. In some embodiments, only one of **620** or **630** is utilized. In these embodiments, the presence of a hidden command is signified by the data pattern alone, or the address value alone.

At **640**, the data field of the memory card access command is populated with a command string to specify a purpose other than a memory card access. For example, the command string may be written to the data field as the command index **540** for the smart card controller. This command may be used for any purpose. For example, one or more hidden commands may have as a sole purpose keeping power provided to the memory card slot so that the RFID card continues to receive power.

At **650**, the data field of a memory card access command is populated with a password to authenticate access to the RFID card coupled to the memory card slot. In some embodiments, a password is included in the data field for every hidden command. In other embodiments, a password is only included at the beginning of an exchange.

At **660**, the memory card access command is sent to the RFID card coupled to the memory card slot. For example, a mobile computing device (**110**, FIGS. **1**, **2**) may send the memory card access command to an RFID card (**120**, FIGS. **1**, **3**, **4**) in a memory card slot (**112**, FIGS. **1**, **2**). The RFID card includes a memory card controller (**340**, FIG. **3**) to divert the command (or take some other action) based on the data fields populated in method **600**.

FIG. **7** shows a flowchart in accordance with various embodiments of the present invention. In some embodiments, method **700** may be used by an RFID card in a memory card slot. In some embodiments, method **700**, or portions thereof, is performed by a memory card controller within a memory card compatible RFID card, and in other embodiments, method **700**, or portions thereof, is performed by software. The various actions in method **700** may be performed in the order presented, in a different order, or simultaneously. Further, in some embodiments, some actions listed in FIG. **7** are omitted from method **700**.

Method **700** begins at **710** in which a memory card access command is received from a mobile computing device via a host interface. The actions of **710** correspond to an RFID card in a memory card slot of a mobile computing device receiving a memory card access command.

At **720**, the memory card controller checks criteria in the memory card access command to determine if the memory card access command should be diverted to a smartcard controller resident on the RFID card. The criteria may be one or both of a hidden command data value, a hidden command address value, or both. If there is a criteria match at **730**, then a hidden command is present, and at least a portion of the memory card access command is diverted at **740**. If there is not a criteria match, then no hidden command is present, and a memory access is performed at **750**.

FIG. **8** shows a flowchart in accordance with various embodiments of the present invention. In some embodiments, method **800** may be used by an RFID card in a memory card slot. In some embodiments, method **800**, or portions thereof, is performed by a memory card controller within an RFID card, and in other embodiments, method **800**, or portions thereof, is performed by software. The various actions in method **800** may be performed in the order presented, in a different order, or simultaneously. Further, in some embodiments, some actions listed in FIG. **8** are omitted from method **800**.

Method **800** begins at **810** in which a memory card write command is received from a mobile computing device via a host interface. If the memory card write command is determined to be a hidden command, processing continues with **840**; otherwise, a memory write is performed at **830**.

At **840**, the hidden command is diverted to a smartcard controller. In some embodiments, this corresponds to sending command index **540** and hidden command related data **550** (FIG. **5**) to the smartcard controller. If the hidden command is determined to be a "read" at **850**, processing continues at **860**; otherwise, the hidden command processing is done. At **860**, the memory card controller retrieves non-memory data from the smartcard controller, and at **870**, a memory card read command is received from the mobile computing device. At **880**, the non-memory data is returned to the mobile computing device.

Method **800** demonstrates how a mobile computing device can perform a read from a smartcard controller in a memory card compatible RFID card. The mobile computing device issues a memory card write command with a hidden command having a status field designating a read, and then the mobile computing device issues a memory card read command. The processing in the card receives the hidden command, identifies it as a read, and then returns data to the mobile computing device in response to a subsequent memory card read command.

FIG. **9** shows a flowchart in accordance with various embodiments of the present invention. In some embodiments, method **900** may be used by an RFID card in a memory card slot. In some embodiments, method **900**, or portions thereof, is performed by a smartcard controller within an RFID card, and in other embodiments, method **900**, or portions thereof, is performed by software. The various actions in method **900** may be performed in the order presented, in a different order, or simultaneously. Further, in some embodiments, some actions listed in FIG. **9** are omitted from method **900**.

Method **900** begins at **910** in which a smartcard controller receives a command from the memory card controller. This command corresponds to a hidden command received by the memory card controller. At **950**, the smartcard controller determines whether the command is a "dummy" command used solely for the purpose of maintaining power to the memory card slot. If no, then the smartcard function specified in the command is performed at **930**. If yes, then the command is disregarded at **960**.

Method **900** allows a memory card compatible RFID card in a memory card slot to remain powered during periods when the memory card slot in the host device would otherwise remove power to save energy. This is a coordinated effort between software building hidden commands in a memory card access command, the memory card controller diverting the hidden command to the smartcard controller, and the smartcard controller disregarding the command. According to embodiments represented by FIG. **3**A, providing power to the RFID card also provides power the smartcard controller, thereby allowing the use of a small inductive device such as those shown in FIGS. **3** and **4**.

FIG. **10** shows a flowchart in accordance with various embodiments of the present invention. In some embodiments, method **1000** may be used by an RFID card in a memory card slot. In some embodiments, method **1000**, or portions thereof, is performed by a memory card controller within an RFID card, and in other embodiments, method **1000**, or portions thereof, is performed by software. The various actions in method **1000** may be performed in the order presented, in a different order, or simultaneously. Further, in some embodiments, some actions listed in FIG. **10** are omitted from method **1000**.

Method **1000** begins at **1010** in which a memory card controller receives a hidden command from a mobile computing device. If at **1020**, the memory card controller determines that the hidden command is to be diverted to the smartcard controller, then the command is diverted at **1030**. In some embodiments, this corresponds to sending command index **540** and hidden command related data **550** (FIG. **5**) to the smartcard controller. If the command is not to be diverted, then the memory card controller does not divert the command; however, the memory card controller may take other actions at **1040** based on the hidden command. For example, the memory card controller may modify a clock signal provided to the smartcard controller. Also for example, the memory card controller may assert a reset signal to the smartcard controller. Still for example, the memory card controller may cycle power to the smartcard controller. The memory card controller is able to cycle power to the smartcard controller in embodiments represented by FIG. **3**B.

Cycling power to the smartcard controller may be a coordinated effort between the hosting computing device and the memory card controller in the RFID card. For example, power to the memory card slot may be maintained by supplying dummy hidden commands to the RFID card as described above with reference to FIG. **9**. While power is maintained to the memory card slot, hidden commands may be used to cause the memory card controller to cycle power to the smartcard controller.

FIG. **11** shows a method authenticating a mobile computing device to one or more functions in a memory card compatible RFID card. Method **1100** begins at block **1110** in which an activation code is received at an RFID card from a mobile computing device. At **1120**, the received activation code is compared to a code stored in the RFID card. If the activation code matches, the RFID card receives a password from the mobile computing device at **1140**, and stores the password in the RFID card for later use at **1150**. If the activation code does not match, the RFID card determines whether a number of allowable tries has been exceeded at **1160**. If the number of allowable tries has been exceeded, the RFID card issuer is contacted at **1170**, and if the number of allowable tries has not been exceeded, the method repeats until either the activation code matches or the number of allowable tries has been exceeded.

Method **1100** may be performed when an RFID card is issued to a user. For example, the RFID card may be a mobile payment card issued by a financial institution. The user may be provided an activation code to "activate" the RFID card. When the user successfully enters the activation code, the user is prompted for a password, and that password is stored for use in future hidden commands.

In some embodiments, multiple non-memory functions in an RFID card are authenticated using method **1100**. For example, each of multiple non-memory functions may have stored activation codes, and each is activated separately. Each of the separately activated functions may have a different password, or the multiple functions may share a password.

Embodiments described thus far include a power delivery mechanism from the host to the smartcard controller that allow the antenna or coil to be very small. The small antenna or coil allows for higher levels of integration, but may also reduce the maximum distance at which the RFID card will function. For example, referring to FIG. **14**, the voltage produced by the antenna needs to overcome the diode drops of the bridge rectifier before data can be demodulated within the smartcard controller. As the antenna shrinks in size, the RFID card needs to be closer to the device producing the interrogating RF field in order to produce a large enough voltage to overcome the bridge rectifier diode drops, thereby reducing the maximum usable distance.

FIG. **15** shows a smartcard controller with performance enhancement circuits including a load modulation driver cir-

cuit and a single antenna in accordance with various embodiments of the present invention. Antenna **1542** is a small inductive element as described above. Capacitor **1544** is in parallel with antenna **1542** and together they form tuned circuit **1540** that is tuned to be resonant at the frequency of operation (e.g., 13.56 MHz). The performance enhancement circuits include an amplifier **1510**, outgoing data extraction circuit **1520**, and load modulation driver circuit **1530**. Amplifier **1510** amplifies the voltage received at antenna **1542**, and the amplified voltage is provided to the smartcard controller. This increases the maximum distance at which the RFID card can operate while receiving data, but also creates a unidirectional data path where a bidirectional data path previously existed. In other words, amplifier **1510** forms a simplex communication path where a half duplex path previously existed.

In order to restore the outgoing data path and re-create a half duplex communications system, the RFID card includes outgoing data extraction circuit **1520** and load modulation driver circuits **1530**. Outgoing data extraction circuit **1520** receives a signal that is formed by the interrogating RF field having been load modulated by the smartcard controller. For example, the impedance of the antenna port is modulated by load modulation driver circuit **1410** (FIG. **14**), where the modulating signal is the data. Outgoing data extraction circuit **1520** recovers the data, and then load modulation driver circuit **1530** modulates the impedance of the tuned circuit **1540** to form the outgoing data path.

Outgoing data extraction circuit **1520** may include one or more filters to extract the data. For example, referring now to FIG. **16**, the load modulation driver circuit within the smartcard controller creates frequency sidebands **1610** about the carrier frequency **1620** of the interrogating RF field. Outgoing data extraction circuit **1520** may include conventional filters to isolate one or more sidebands and extract the data. As shown in FIG. **16**, in some 13.56 MHz embodiments, the bandwidth of the carrier frequency of the interrogating RF field may be on the order of 850 KHz and the bandwidth of the sidebands may be on the order of 100-200 KHz, although this is not a limitation of the present invention.

Load modulation driver circuit **1530** receives the extracted data from outgoing data extraction circuit **1520**, and load modulates the tuned circuit **1540** in response thereto. Load modulation driver circuits are generally well known, and may be as simple as a switched transistor that adds and removes a reactive element from tuned circuit **1540**. In some embodiments, load modulation driver circuit **1530** substantially duplicates the load modulation driver circuit **1410** within smartcard controller **330**.

Amplifier **1510** is shown coupled to smartcard controller pad **1472**, and data extraction circuit **1520** is shown coupled to smartcard controller pad **1474**, but this is not a limitation of the present invention. For example, outgoing data extraction circuit **1520** may be coupled to smartcard controller pad **1472** while amplifier **1510** may be coupled to smartcard controller pad **1474**. Also for example, both circuit **1520** and amplifier **1510** may be coupled to either pad **1472** or pad **1474** without departing from the scope of the present invention.

FIG. **17** shows a smartcard controller with performance enhancement circuits including a load modulation driver circuit and separate receive and transmit antennas in accordance with various embodiments of the present invention. FIG. **17** shows smartcard controller **330**, amplifier **1510**, outgoing data extraction circuit **1520**, and load modulation driver circuit **1530**, all of which are described above. FIG. **17** also shows tuned circuits **1740** and **1750**. Tuned circuit **1740** includes receive antenna **1742** and capacitor **1744**. Tuned circuit **1750** includes transmit antenna **1752** and capacitor **1754**. In some embodiments, receive antenna **1742** and transmit antenna **1752** are small inductive elements as described above.

Separate transmit and receive antennas allow for different tuning, both in frequency and bandwidth, or "Q." For example, tuned circuit **1740** may be tuned with relatively high Q for receive as shown at **1820** in FIG. **18**, while tuned circuit **1750** may be tuned for a lower Q to envelope both sidebands for transmit as shown at **1830** in FIG. **18**. The higher Q tuning for the receive antenna may further increase the maximum usable distance when the RFID card is receiving.

FIG. **19** shows a smartcard controller with performance enhancement circuits including a load modulation driver circuit and multiple transmit antennas in accordance with various embodiments of the present invention. FIG. **19** shows smartcard controller **330**, amplifier **1510**, outgoing data extraction circuit **1520**, load modulation driver circuit **1530**, and tuned receive circuit **1740**, all of which are described above. FIG. **19** also shows two tuned transmit circuits **1950** and **1960**. Tuned circuit **1950** includes antenna **1952** and capacitor **1954**, and tuned circuit **1960** includes antenna **1962** and capacitor **1964**. Antennas **1952** and **1962** may be small inductive elements as described above.

Separate transmit antennas allow separate tuning for the two sidebands. For example, tuned circuit **1950** may be tuned for the lower sideband tuned circuit **1960** may be tuned for the upper sideband as shown in FIG. **20**. Higher Q tuning of the transmit antennas for the separate sidebands may further increase the maximum usable distance when the RFID card is transmitting.

FIG. **21** shows a smartcard controller with performance enhancement circuits including an active transmit driver circuit and a single antenna in accordance with various embodiments of the present invention. The circuits shown in FIG. **21** are similar to FIG. **15** except the load modulation driver is replaced with an active transmit driver circuit **2130**. Active transmit driver circuit **2130** may include circuits to actively transmit a signal rather than simply load modulate tuned circuit **1540**. For example, active transmit driver circuit **2130** may include one or more amplifiers filters, oscillators, modulators, etc., to form a signal that mimics the sidebands **1610** (FIG. **16**) as if the interrogating RF field experienced load modulation. Active transmission can make use of power available on the RFID card and can further increase the usable distance when smartcard controller **330** is transmitting.

FIG. **22** shows a smartcard controller with performance enhancement circuits including an active transmit driver circuit and separate receive and transmit antennas in accordance with various embodiments of the present invention. The circuits shown in FIG. **22** are similar to FIG. **17** except the load modulation driver is replaced with an active transmit driver circuit **2130**. Active transmit driver circuit **2130** is described above with reference to FIG. **21**.

FIG. **23** shows a smartcard controller with performance enhancement circuits including an active transmit driver circuit and multiple transmit antennas in accordance with various embodiments of the present invention. The circuits shown in FIG. **23** are similar to FIG. **19** except the load modulation driver is replaced with an active transmit driver circuit **2130**. Active transmit driver circuit **2130** is described above with reference to FIG. **21**.

FIG. **24** shows a smartcard controller with a pad to provide a digital data output. Smartcard controller **2430** includes the antenna pads **1472** and **1474** as described above. Smartcard controller **2430** also includes pad **2410** which provides the digital data output directly. By providing the digital data

output directly, smartcard controller **2430** enables various embodiments of the invention to eliminate the outgoing data extraction circuit.

FIG. **25** shows a smartcard controller with digital data output and performance enhancement circuits including a load modulation driver circuit and a single antenna in accordance with various embodiments of the present invention. FIG. **25** shows smartcard controller **2430**, amplifier **1510**, load modulation driver circuits **1530**, and tuned circuit **1540**, all of which are described above. Note that because smartcard controller **2430** provides digital data directly, the outgoing data extraction circuit **1520** (FIG. **15**) can be omitted, thereby reducing parts count and cost.

FIG. **26** shows a smartcard controller with digital data output and performance enhancement circuits including a load modulation driver circuit and separate receive and transmit antennas in accordance with various embodiments of the present invention. FIG. **26** shows circuits similar to those shown in FIG. **25**, except that separate transmit and receive antennas are provided. Separate transmit and receive antennas (and associated tuned circuits) allow for a higher Q tuning of the receive antenna, thereby increasing the maximum usable distance when RFID card is receiving. See FIG. **18**.

FIG. **27** shows a smartcard controller with digital data output and performance enhancement circuits including a load modulation driver circuit and multiple transmit antennas in accordance with various embodiments of the present invention. FIG. **27** shows circuits similar to those shown in FIG. **26**, except that multiple transmit antennas are provided. Multiple separate transmit antennas (and associated tuned circuits) allow for a higher Q tuning of each transmit antenna, thereby increasing the maximum usable distance when RFID card is transmitting. See FIG. **20**.

FIG. **28** shows a smartcard controller with digital data output and performance enhancement circuits including an active transmit driver circuit and a single antenna in accordance with various embodiments of the present invention. The circuits shown in FIG. **28** are similar to FIG. **25** except the load modulation driver is replaced with an active transmit driver circuit **2130**. Active transmit driver circuit **2130** is described above with reference to FIG. **21**. In general, the term "driver" as used herein refers to an active transmit driver or a load modulation driver or any other method of driving the transmit output data.

FIG. **29** shows a smartcard controller with digital data output and performance enhancement circuits including an active transmit driver circuit and separate receive and transmit antennas in accordance with various embodiments of the present invention. The circuits shown in FIG. **29** are similar to FIG. **26** except the load modulation driver is replaced with an active transmit driver circuit **2130**. Active transmit driver circuit **2130** is described above with reference to FIG. **21**.

FIG. **30** shows a smartcard controller with digital data output and performance enhancement circuits including an active transmit driver circuit and multiple transmit antennas in accordance with various embodiments of the present invention. The circuits shown in FIG. **30** are similar to FIG. **27** except the load modulation driver is replaced with an active transmit driver circuit **2130**. Active transmit driver circuit **2130** is described above with reference to FIG. **21**.

FIGS. **31-34** show performance enhancing application specific integrated circuits (ASICs) coupled to various smartcard controllers in accordance with various embodiments of the present invention. FIGS. **31** and **32** show ASICs coupled to smartcard controller **330**. Both ASICs include amplifier **1510** and outgoing data extraction circuits **1520**. The ASIC of FIG. **31** includes load modulation driver circuits **1530** and the ASIC of FIG. **32** includes active transmit driver circuit **2130**. FIGS. **33** and **34** show ASICs coupled to receive direct digital data from smartcard controller **2430**. Accordingly, the outgoing data extraction circuits are omitted. The ASIC of FIG. **33** includes amplifier **1510** and load modulation driver circuits **1530**, and the ASIC of FIG. **34** includes amplifier **1510** and active transmit driver circuit **2130**.

By combining a smartcard controller and an ASIC as described herein, the performance of an RFID card may be enhanced with a reduced parts count. Further, any of ASICs shown may be used with separate receive and transmit antennas, multiple transmit antennas, or any combination. Further, one ASIC may be provided with all of the functionality shown in FIGS. **31-34** and the manner in which it is connected to a smartcard controller will dictate which functional blocks (e.g., data extraction, load modulation, active transmit) are utilized.

FIG. **35** shows a memory card with integrated smartcard controller, performance enhancement circuits, and antennas in accordance with various embodiments of the present invention. Host interface **310**, memory card controller **340**, and memory **360** are described above. Smartcard controller **3520** may be any smartcard controller described herein, including smartcard controller **330** or smartcard controller **2430**. Enhancement circuits **3550** may include any of the enhancement circuits described herein including any combination of amplifier **1510**, outgoing data extraction circuits **1520**, load modulation driver circuits **1530** and active transmit driver circuit **2130**. Antenna(s) **3560** may include any number or type of antennas. For example, antenna(s) **3560** may include one antenna, separate transmit and receive antennas, or a receive antenna and multiple transmit antennas.

FIG. **36** shows a memory card with integrated smartcard controller and performance enhancement circuits in accordance with various embodiments of the present invention. The memory card of FIG. **36** shows circuits similar to FIG. **35** with the exception of antenna(s) **3560**. Instead, the memory card of FIG. **36** is intended for use with a host device that includes antenna(s). In some embodiments, antenna(s) **3560** are included in the memory card of FIG. **36**, thereby allowing the host device to decide whether to use the antennas on the memory card, or the antennas on the host device. The form factor of the memory card in FIGS. **35** and **36** is shown as a microSD card, but this is not a limitation of the present invention. Any form factor may be employed.

FIG. **37** shows a subscriber identity module (SIM) card with integrated smartcard controller, performance enhancement circuits and antennas in accordance with various embodiments of the present invention. Smartcard controller **3520**, enhancement circuits **3550**, and antenna(s) **3560** are described above with reference to FIG. **35**.

FIG. **38** shows a subscriber identity module (SIM) card with integrated smartcard controller and performance enhancement circuits in accordance with various embodiments of the present invention. The SIM card of FIG. **38** shows circuits similar to FIG. **37** with the exception of antenna(s) **3560**. Instead, the SIM card of FIG. **38** is intended for use with a host device that includes antenna(s). In some embodiments, antenna(s) **3560** are included in the SIM card of FIG. **38**, thereby allowing the host device to decide whether to use the antennas on the SIM card, or the antennas on the host device.

FIG. **39** shows a mobile device with a smartcard controller, enhancement circuits, and antenna(s). The mobile device of FIG. **39** includes a built-in smartcard controller for RFID functionality as opposed to accepting a separate RFID card as

described above. The mobile device may be any electronic device including a mobile phone, a tablet computer, or the like.

Although the present invention has been described in conjunction with certain embodiments, it is to be understood that modifications and variations may be resorted to without departing from the spirit and scope of the invention as those skilled in the art readily understand. Such modifications and variations are considered to be within the scope of the invention and the appended claims.

What is claimed is:

1. A mobile device comprising:

a smartcard controller;

an antenna; and

performance enhancement circuits coupled between the smartcard controller and the antenna, wherein the performance enhancement circuits include an amplifier and a load modulation circuit, and wherein the amplifier is coupled to amplify a signal received from the antenna and to provide an amplified signal to the smartcard controller.

2. The mobile device of claim **1** wherein the antenna is tuned to operate at 13.56 MHz.

3. The mobile device of claim **1** wherein the antenna comprises an inductive element too small to draw enough power sufficient to operate the smartcard controller from an interrogating radio frequency (RF) field.

4. The mobile device of claim **1** wherein the smartcard controller is coupled to be powered by the mobile device.

5. The mobile device of claim **1** wherein the performance enhancement circuits are coupled to be powered by the mobile device.

6. The mobile device of claim **1** wherein the mobile device comprises a mobile phone.

7. A mobile device comprising:

a smartcard controller;

an antenna; and

performance enhancement circuits coupled between the smartcard controller and the antenna, wherein the performance enhancement circuits include an amplifier and an active transmit driver circuit, and wherein the amplifier is coupled to amplify a signal received from the antenna and to provide an amplified signal to the smartcard controller.

8. The mobile device of claim **7** wherein the antenna is tuned to operate at 13.56 MHz.

9. The mobile device of claim **7** wherein the antenna comprises an inductive element too small to draw enough power sufficient to operate the smartcard controller from an interrogating radio frequency (RF) field.

10. The mobile device of claim **7** wherein the smartcard controller is coupled to be powered by the mobile device.

11. The mobile device of claim **7** wherein the performance enhancement circuits are coupled to be powered by the mobile device.

12. The mobile device of claim **7** wherein the mobile device comprises a mobile phone.

13. A mobile device comprising:

a smartcard controller;

an antenna;

an amplifier coupled to amplify signals received at the antenna and drive the smartcard controller; and

a driver circuit to drive the antenna with data provided by the smartcard controller.

14. The mobile device of claim **13** wherein the driver circuit comprises a load modulation circuit.

15. The mobile device of claim **13** wherein the driver circuit comprises an active transmit driver circuit.

16. The mobile device of claim **15** wherein the active transmit driver circuit is coupled to be powered by the mobile device.

17. The mobile device of claim **13** wherein the amplifier is coupled to be powered by the mobile device.

18. The mobile device of claim **13** wherein the antenna is tuned to operate at 13.56 MHz.

19. The mobile device of claim **13** wherein the antenna comprises an inductive element too small to draw enough power sufficient to operate the smartcard controller from an interrogating radio frequency (RF) field.

20. The mobile device of claim **13** wherein the mobile device comprises a mobile phone.

* * * * *