UNITED STATES PATENT AND TRADEMARK OFFICE

BEFORE THE PATENT TRIAL AND APPEAL BOARD

SAMSUNG ELECTRONICS CO., LTD., and

SAMSUNG ELECTRONICS AMERICA, INC.,

Petitioners,

v.

ICASHE, INC.,

Patent Owner.

Case IPR2025-00641

Patent No. 11,694,053

DECLARATION OF EMMANOUIL TENTZERIS IN SUPPORT OF PETITION FOR *INTER PARTES* REVIEW OF U.S. PATENT NO. 11,694,053

TABLE OF CONTENTS

Page

I. INTRODUCTION 1

II. QUALIFICATIONS 5

III. LEGAL UNDERSTANDING 13

IV. BACKGROUND OF THE TECHNOLOGY 20

V. THE '053 PATENT 24

A. The '053 Patent Overview 24

B. The Prosecution History 27

1. '053 Patent Prosecution 27

2. '722 Patent Prosecution 27

C. Priority Date of the '053 Patent 29

VI. LEVEL OF ORDINARY SKILL IN THE ART 32

VII. CLAIM CONSTRUCTION 33

VIII. GROUNDS OF UNPATENTABILITY 33

IX. SPECIFIC GROUNDS FOR CHALLENGE 35

A. GROUND 1: BANGS ANTICIPATES AND/OR RENDERS OBVIOUS CLAIMS 1–8 AND 17–20 35

1. Overview of Bangs (Ex. 1004, U.S. Patent App. Pub. 2010/0112941) 35

2. Invalidity of Claims 1–8 and 17–20 Over Bangs 40

B. GROUND 2: BANGS IN VIEW OF KERDRAON RENDERS OBVIOUS CLAIMS 1–8 AND 17–20 83

C. GROUND 3: BANGS IN VIEW OF KOH RENDERS OBVIOUS CLAIMS 1–8 AND 17–20 93

D. GROUNDS 4–6: GROUNDS 1–3 IN FURTHER VIEW OF FISHER RENDERS OBVIOUS CLAIMS 2–4 AND 19–20 99

X. SECONDARY CONSIDERATIONS 104

XI. CONCLUSION 105

I. INTRODUCTION

1. My name is Emmanouil Tenzteris and I am currently the Ed and Pat Joy Chair Professor at the Georgia Institute of Technology. I have been retained on behalf of Samsung Electronics Co. Ltd. and Samsung Electronics America Inc. ("Petitioners" or "Samsung"), to provide my opinions on certain issues related to U.S. Patent No. 11,694,053 ("the '053 patent") in connection with the above-captioned *inter partes* review ("IPR") proceeding. In particular, I have been asked to provide my insights, analysis, and opinions regarding whether claims 1–8 and 17–20 of the '053 patent ("Challenged Claims") are anticipated by and/or obvious over the prior art references identified below.

2. I understand that the '053 patent is titled "Method and Apparatus for Transmitting Data Via NFC for Mobile Applications Including Mobile Payments and Ticketing"; names as inventors Siva G. Narendra, Saurav Chakraborty, and Prabhakar Tadepalli; and is currently assigned to iCashe, Inc. according to the USPTO. I have considered the '053 patent. I understand that the '053 patent has been provided as Ex. 1001.

3. I understand that the file history of the '053 patent has been provided as Ex. 1002. I have considered this file history, and I will refer to it as "the '053 File History."

4. I understand that the ’053 patent is a continuation of U.S. Patent Application No. 16/791,609, which is a continuation of U.S. Patent Application No. 16/393,275, which is a continuation of U.S. Patent Application No. 15/904,328, which is a continuation of U.S. Patent Application No. 15/338,436, which is a continuation of U.S. Patent Application No. 14/517,585, which is a continuation of U.S. Patent Application No. 14/460,647, which is a continuation of U.S. Patent Application No. 13/871,849, which is a continuation of U.S. Patent Application No. 13/038,341 (“the ’341 Application”), which is a continuation-in-part of U.S. Patent Application No. 12/188,346 (“the ’346 Application”). I understand the ’053 patent characterizes the ’341 Application as a continuation of the ’346 Application. However, the Application Data Sheet filed during prosecution of the ’341 Application and the Related U.S. Application Data listed on the face of the related ’965 and ’722 patents indicate that the ’341 Application is a continuation-in-part, not a continuation, of the ’346 Application. Ex. 1016 (’722 Patent) at 1; Ex. 1013 (’965 Patent) at 1; Ex. 1010 (’341 Application File History) at 39-42.

5. I understand that the ’053 patent claims a priority date of August 8, 2008, the filing date of the ’346 Application. As I discuss in Section V.C, the Challenged Claims are not entitled to the benefit of at least the ’346 Application filing date. For the purposes of rendering my opinions in this declaration, I have been asked to consider the Challenged Claims assuming they are entitled to (a) the

March 1, 2011 filing date of the ’341 Application, and (b) alternatively, the August 8, 2008 filing date of the ’346 Application. I address the alternative 2008 priority date in Grounds 1 and 3-4, and 6. I have not been asked to opine on whether the Challenged Claims of the ’053 patent are entitled to this priority date, and do not provide any opinion on that subject.

6. My analysis and conclusions set forth in this declaration are based on my educational background and experiences in the field (*see* Section II). I am qualified to opine concerning what a person of ordinary skill in the art would have known and understood during that time. Before August 8, 2008, my level of skill in the art was at least that of a person of ordinary skill. I am qualified to opine concerning what a person of ordinary skill in the art would have known and understood at the time of the ’053 patent’s purported invention. My analysis and conclusions herein are from the perspective of a person of ordinary skill in the art as of March 1, 2011 for Grounds 2 and 5, and as of August 8, 2008 for Grounds 1, 3-4 and 6.

7. As part of my independent analysis for this declaration, I have considered the following: the background knowledge/technologies that were commonly known to persons of ordinary skill in this art during the time before the earliest claimed priority date for the ’053 patent; my own knowledge and experiences gained from my work experience in the field of the ’053 patent and

related disciplines; and my experience in working with others involved in this field and related disciplines.

8. I have considered the following non-exhaustive list of references in preparing my declaration. I have been instructed to assume that each of these references qualifies as prior art as of the respective priority dates of the respective grounds in which they are used as discussed below.

- **U.S. Patent Application Publication No. 2010/0112941 ("Bangs")** to Joakim Bangs, Robin Wilson, and Franz Fuchs, titled "NFC Communicators," filed on March 20, 2008 and published on May 6, 2010. I understand that a copy of this reference has been designated as Exhibit 1004. Throughout my declaration, references to Bangs are to Exhibit 1004.

- **U.S. Patent Application Publication No. 2009/0215489 ("Kerdraon")** to Alan Kerdraon, Thierry Morel, Oliver Briot, Jerome Legros, and Hauke Meyn, titled "Method and Device for Managing Applications of a Mobile Terminal ," filed on February 26, 2009 and published on August 27, 2009. I understand that a copy of this reference has been designated as Exhibit 1006. Throughout my declaration, references to Kerdraon are to Exhibit 1006.

- **U.S. Patent Application Publication No. 2008/0073426 ("Koh")** to Liang Seng Koh, Futong Cho, Hsin Pan, and Fuliang Cho, titled "Method and apparatus for providing electronic purse," filed on September 24, 2006 and published on March 27, 2008. I understand that a copy of this reference has been designated as Exhibit 1007. Throughout my declaration, references to Koh are to Exhibit 1007.

- **U.S. Patent Application Publication No. 2007/0156436 ("Fisher")** to Michelle Fisher, Rathindra Guha, and Stephen Pacheco, titled "Method And Apparatus For Completing A Transaction Using A Wireless Mobile Communication Channel And Another Communication Channel," filed on August 25, 2006 and published on July 5, 2007. I understand that a copy

of this reference has been designated as Exhibit 1008. Throughout my declaration, references to Fisher are to Exhibit 1008.

9. I understand that there is a pending district court litigation between Petitioners and Patent Owner ("Texas Case") involving the '053 patent.

10. I am being compensated by Samsung at my standard hourly consulting rate of $650 for my time on this matter. My compensation is not dependent on the outcome of this proceeding or any other proceeding between the parties.

11. In forming my opinions, I relied on the documents cited in this declaration and the documents identified in the attached Appendix B. These documents comprise patents, file histories, printed publications, and other related documents. As discussed below, each document is a type that experts in my field would have reasonably relied upon when forming their opinions. Further, experts in my field would have had access to each document either through the applicable patent offices and/or well-known libraries, conferences, or publications in the field. My opinions are also based upon my personal and professional experience.

II. QUALIFICATIONS

12. A summary of my background and qualifications as a technical expert for this case is provided below. A complete listing of my qualifications and background are detailed in my curriculum vitae ("CV"), which is attached hereto as Appendix A. The '053 patent is in the field of smartcards and contactless communications, including, e.g., RFID presence sensing and interrogation in an

energy efficient manner. As demonstrated by my CV and the below summary of my relevant experience, I would be considered by others to be an expert in the field of smartcards and contactless communications, including, e.g., an expert in a variety of RFID applications in different frequency ranges and RF modules, such as RFID readers, and power efficient circuits with antennae.

13. My qualifications include over 25 years' experience in the field. In 1992, I received my B.S.E.E. at the National Technical University of Athens, Greece. In 1994, I received my M.Sc. at the University of Michigan, Ann Arbor. In 1998, I received a Ph.D. degree from the University of Michigan, Ann Arbor. I became an Assistant Professor at the School of Electrical and Computer Engineering at Georgia Institute of Technology in 1998 until 2004 when I became an Associate Professor from 2004–2009, and a Professor from 2009–2016; in 2016 I was named to the Ken Byers Professor seat at the Georgia Institute of Technology, School of Electrical and Computer Engineering; and in 2024 I was named the inaugural Ed and Pat Chair Professor at the Georgia Institute of Technology, School of Electrical and Computer Engineering.

14. Throughout my career, I have received a variety of awards. I am a Fellow of IEEE, a member of the MTT-15 Committee, an Associate Member of European Microwave Association (EuMA), a Fellow of the Electromagnetics Academy, and a member of Commission D, URSI and of the Technical Chamber of

Greece. In recognition of my world-leading achievements in the area of RFID's, I am currently an IEEE EPS (Electronic Packaging Society) Distinguished Lecturer, and I served as an IEEE MTT Distinguished Microwave Lecturers (DML) from 2010–2012 and as the IEEE C-RFID (Committee on RFID technologies) Distinguished Lecturer from 2016–2022. I have published more than 850 papers in peer reviewed journals and conference proceedings, 7 books, and more than 25 book chapters. I have won awards for my contributions in developing various technologies, including RFID systems operating at different frequencies and RFID applications with different power constraints. My achievements include the following:

- IEEE fellow — a distinction reserved for select IEEE members whose extraordinary accomplishments in any of the IEEE fields of interest are deemed fitting of this prestigious grade elevation. IEEE, *About the IEEE Fellow Program*, http://www.ieee.org/membership/fellows/ (last visited Mar. 14, 2022).
- 2024 IEEE Conference on RFID Technologies and Applications (RFID-TA) Best Student Paper Award
- 2024 Georgia Tech Outstanding Achievement in Research Innovation Award

- 2024 IEEE International Microwave Symposium (IMS) Best Student Paper Award
- 2023 Proceedings of IEEE Best Paper Award
- 2023 Present IEEE Electronic Packaging Society (EPS) Distinguished Lecturer
- 2022 Georgia Tech Outstanding Doctoral Thesis Advisor Award
- 2021 Research on "5G as a Wireless Grid" technology was featured as one of the World Economic Forum's Top 10 Emerging Technologies of 2021
- 2021 IEEE Antennas and Propagation Symposium (APS) Best Student Paper Award (co-authored)
- 2019 Humboldt Research Prize
- 2019 IEEE APS Conference Co-Chair
- 2018 Intel IEEE ECTC 2018 Best Student Paper Award
- 2015–present IEEE CRFID Distinguished Lecturer
- 2010–2012 IEEE MTT-S Distinguished Microwave Lecturer
- 2017 Georgia Tech Outstanding Achievement in Research Program Development Award
- 2017 Archimedes IP Salon Gold Medal
- 2016 Bell Labs Prize Third Award

- 2015 IET Microwaves, Antennas and Propagation Premium Award
- 2014 Georgia Tech ECE Distinguished Faculty Achievement Award
- 2014 IEEE RFID-TA Best Student Paper Award
- 2013 IET Microwaves, Antennas and Propagation Premium Award
- 2012 Finland Distinguished Professor (Fi.Di.Pro.) Award
- 2012 Architecture Award of Excellence, Architecture World Summit
- 2010 IEEE Antennas and Propagation Society Piergiorgio L. E. Uslenghi Letters Prize Paper Award
- 2010 Georgia Tech Senior Faculty Outstanding Undergraduate Research Mentor Award
- 2009 IEEE Transactions on Components and Packaging Technologies Best Paper Award
- 2009 IEEE Antennas and Propagation Symposium (APS) Second Best Student Paper Award
- 2009 E.T.S. Walton Award from Science Foundation Ireland
- 2007 IEEE Antennas and Propagation Symposium (APS) Best Student Paper Award
- 2007 IEEE International Microwave Symposium (IMS) Third Best Student Paper Award

- 2007 IEEE International Symposium on Antennas and Propagation (ISAP) Poster Presentation Award
- 2006 Asian-Pacific Microwave Conference (APMC) Award
- 2006 IEEE-MTT Outstanding Young Engineer Award
- 2004 IEEE Transactions on Advanced Packaging Commendable Paper Award
- 2003 NASA Godfrey "Art" Anzic Collaborative Distinguished Publication Award
- 2003 IBC International Educator of the Year Award
- 2003 IEEE-CPMT Outstanding Young Engineer Award
- 2002 International Conference on Microwave and Millimeter-Wave Technology Best Paper Award (Beijing, China)
- 2002 Georgia Tech-ECE Outstanding Junior Faculty Award
- 2001 ACES Conference Best Student Paper Award
- 2000 NSF CAREER Award
- 1999 Technical Program Co-Chair of the 54th ARFTG Conference, Atlanta, GA
- 1997 Best Paper Award, International Hybrid Microelectronics and Packaging Society
- 1989 Papastavridios Greek Mathematics Excellence Fellowship

- 1988–1992 Greek Government Academic Excellence Fellowships

15. My work is extensively cited in Google Scholar with 31,100 citations with an h-index of 86. An h-index is a number representing the number of papers with the same number of citations, meaning I have over 86 papers with 86 citations. My work has been reported in more than 550 international media publications and has been published in numerous major global scientific journals (IEEE, Nature Electronics, Nature Scientific Reports).

16. My research interests relate to printed radio frequency (RF) electronics, batteries, and sensors; radio frequency identification (RFID) antennas and architectures, and antenna integration and miniaturization techniques, among others areas. I have served as the Head of the Electromagnetics Technical Interest Group of the School of ECE, Georgia Tech. I have also served as the Georgia Electronic Design Center Associate Director for RFID/Sensors research from 2006–2010 and as the GT-Packaging Research Center (NSF-ERC) Associate Director for RF research and the leader of the RF/Wireless Packaging Alliance from 2003-2006. I have made extensive contributions to professional societies in my field, including the Institute of Electrical and Electronics Engineers (IEEE). I am the Founder and Chair of the IEEE MTT-S (Microwave Theory and Techniques Society) TC-24 (RFID Technologies). I am a member of the technical program committees of IEEE-IMS (International Microwave Symposium), IEEE-

AP (Antennas and Propagation Symposium) and IEEE-ECTC (Electronic Components and Technology Conference) Symposia. I was the General Co-Chair of the 2023 IEEE Wireless Power Technology Conference and Expo (WPTCE) in San Diego and of the 2019 IEEE APS Symposium in Atlanta. I was the TPC (Technical Program Competitions) Chair for the IMS (International Microwave Symposium) 2008 Conference and the Co-Chair of the ACES (Applied Computational Electromagnetics Society) 2009 Symposium. I was the Chairman for the 2005 IEEE CEM-TD (Computational Electromagnetics in Time-Domain) Workshop. I have served as the Chair of IEEE-CPMT TC16 (Components, Packaging, and Manufacturing Technology) (RF Subcommittee) and was the Chair of IEEE MTT/AP (Microwave Theory and Techniques / Antennas and Propagation) Atlanta Sections for 2003. In recognition of my extensive expertise in RFID technologies, I was invited to participate in a high-profile Workshop in IEEE RFID-TA (RFID Technical Applications) conference in 2024 involving world-leading experts in this area and focusing on "Reboosting RFID Research: Trends for the next decade."

17. Based on my experience and education, I believe that I am qualified to opine as to the knowledge and level of skill of one of ordinary skill in the art at the time of the alleged invention of the '053 patent (which I further describe below) and what such a person would have understood at that time, and the state of the art

during that time. Based on my above-described experience in the field of smartcards and contactless communications, including, e.g., RFID systems and applications with different frequency ranges, RF modules (such as RFID readers, power efficient circuits with antennae, and the acceptance of my publications and professional recognition by societies in my field, I believe that I am qualified to be an expert with respect to the above-described area of the ’053 patent.

III. LEGAL UNDERSTANDING

A. My Understanding of Priority Dates and Priority Claims

18. I have been informed that for a claim in a later-filed application to be entitled to the benefit of the filing date of a prior application, the specification of the prior application must contain a written description of the invention and the manner and process of making and using the claimed invention, in such full, clear, concise, and exact terms to enable an ordinarily skilled artisan to practice the invention claimed in the later patent application. Additionally, the priority application must describe the later claimed invention in sufficient detail that a person having ordinary skill in the art can clearly conclude that the inventor invented the claimed invention as of the filing date sought. I understand this analysis is performed on a claim-by-claim basis.

B. My Understanding of Claim Construction

19. I am not an attorney and offer no legal opinions, but in the course of my work, I have had experience studying and analyzing patents and patent claims

from the perspective of a person skilled in the art.

20. I have been informed that patent claims are construed from the viewpoint of a person of ordinary skill in the art of the patent at the time of the alleged invention. I have been informed that patent claims generally should be interpreted consistent with their plain and ordinary meaning as understood by a person of ordinary skill in the art in the relevant time period (*i.e.*, at the time of the purported invention, or the so called "effective filing date" of the patent application), after reviewing the patent claim language, the specification, and the prosecution history (*i.e.*, the intrinsic record).

21. I have further been informed that a person of ordinary skill in the art must read the claim terms in the context of the claim itself, as well as in the context of the entire patent specification. I understand that in the specification and prosecution history, the patentee may specifically define a claim term in a way that differs from the plain and ordinary meaning. I understand that the prosecution history of the patent is a record of the proceedings before the U.S. Patent and Trademark Office and may contain explicit representations or definitions made during prosecution that affect the scope of the patent claims. I understand that an applicant may, during the course of prosecuting the patent application, limit the scope of the claims to overcome prior art or to overcome an examiner's rejection, by clearly and unambiguously arguing to overcome or distinguish a prior art reference,

or clearly and unambiguously disavowing claim coverage.

22. In interpreting the meaning of the claim language, I understand that a person of ordinary skill in the art may also consider "extrinsic" evidence, including expert testimony, inventor testimony, dictionaries, technical treatises, other patents, and scholarly publications. I understand this evidence is considered to ensure that a claim is construed in a way that is consistent with the understanding of those of ordinary skill in the art at the time of the claimed invention. For example, this can be useful for a technical term whose meaning may differ from its ordinary English meaning. I understand that extrinsic evidence may not be relied on if it contradicts or varies the meaning of claim language provided by the intrinsic evidence, particularly if the applicant has explicitly defined a term in the intrinsic record.

C. My Understanding of Anticipation

23. I understand that a patent claim is invalid as "anticipated" if all the limitations of the claim are present, either expressly or inherently, in a single prior art publication or patent.

24. I also understand that a prior art reference can disclose a claimed feature because the feature is expressly described or because the feature is inherent in the disclosure. I understand that something is inherent in a prior art reference if the missing descriptive matter must necessarily be present, not merely probably or possibly present, and it would be so recognized by a person of ordinary skill in the

art as of the priority date of the patent. I understand that it is acceptable to examine evidence outside of the prior art reference (i.e., extrinsic evidence) in determining whether a feature, while not expressly discussed in the reference, is necessarily present in it.

25. I have further been informed that where a reference discloses multiple embodiments, the reference should not be limited to a preferred embodiment. Instead, each disclosed embodiment may anticipate.

26. Moreover, I have been informed that as part of an anticipation analysis, it is proper to take into account not only specific teachings of the reference, but also the inferences that one skilled in the art would reasonably be expected to draw therefrom. A reference can anticipate a claim even if it does not expressly spell out all the limitations arranged or combined as in the claim, if a person of skill in the art, reading the reference, would at once envisage the claimed arrangement or combination.

D. My Understanding of Obviousness

27. I understand that a claim may be invalid if the subject matter described by the claim as a whole would have been obvious to a hypothetical person of ordinary skill in the art in view of a prior art reference or in view of a combination of references at the time the claimed invention was made. Therefore, I understand that obviousness is determined from the perspective of a hypothetical person of

ordinary skill in the art and that the asserted claims of the patent should be read from the point of view of such a person at the time the claimed invention was made. I further understand that a hypothetical person of ordinary skill in the art is assumed to know and to have all relevant prior art in the field of endeavor covered by the patent in suit.

28. I have been informed that there are two criteria for determining whether prior art is analogous and thus can be considered prior art: (1) whether the art is from the same field of endeavor, regardless of the problem addressed, and (2) if the reference is not within the field of the patentee's endeavor, whether the reference still is reasonably pertinent to the particular problem with which the patentee is involved. I have also been informed that the field of endeavor of a patent is not limited to the specific point of novelty, the narrowest possible conception of the field, or the particular focus within a given field. I have also been informed that a reference is reasonably pertinent if, even though it may be in a different field from that of the patentee's endeavor, it is one which, because of the matter with which it deals, logically would have commended itself to a patentee's attention in considering their problem.

29. I have also been advised that an analysis of whether a claimed invention would have been obvious should be considered in light of the scope and content of the prior art, the differences (if any) between the prior art and the claimed invention,

and the level of ordinary skill in the pertinent art involved. I understand as well that a prior art reference should be viewed as a whole.

30. I have also been advised that in considering whether a claimed invention would have been obvious over a combination of prior art references, I may assess whether there are apparent reasons to combine known elements in the prior art in the manner claimed in view of interrelated teachings of multiple prior art references, the effects of demands known to the design community or present in the marketplace, and/or the background knowledge possessed by a person of ordinary skill in the art. I understand that other principles may be relied on in evaluating whether a claimed invention would have been obvious, and that these principles include the following:

- A combination of familiar elements according to known methods is likely to be obvious when it does no more than yield predictable results;
- When a device or technology is available in one field of endeavor, design incentives and other market forces can prompt variations of it, either in the same field or in a different one, so that if a person of ordinary skill can implement a predictable variation, the variation is likely obvious;
- If a technique has been used to improve one device, and a person of ordinary skill in the art would recognize that it would improve similar devices in the same way, using the technique is obvious unless its actual application is beyond their skill;
- An explicit or implicit teaching, suggestion, or motivation to combine two prior art references to form the claimed combination may demonstrate obviousness, but proof of obviousness does not depend on or require showing a teaching, suggestion, or motivation to combine;

- Market demand, rather than scientific literature, can drive design trends and may show obviousness;
- In determining whether the subject matter of a patent claim would have been obvious, neither the particular motivation nor the avowed purpose of the named inventor controls whether the claim is obvious;
- One of the ways in which a patent's subject can be proved obvious is by noting that there existed at the time of invention a known problem for which there was an obvious solution encompassed by the patent's claims;
- Any need or problem known in the field of endeavor at the time of invention and addressed by the patent can provide a reason for combining the elements in the manner claimed;
- "Common sense" teaches that familiar items may have obvious uses beyond their primary purposes, and in many cases a person of ordinary skill will be able to fit the teachings of multiple patents together like pieces of a puzzle;
- A person of ordinary skill in the art is also a person of ordinary creativity, and is not an automaton;
- A patent claim can be proved obvious by showing that the claimed combination of elements was "obvious to try," particularly when there is a design need or market pressure to solve a problem and there are a finite number of identified, predictable solutions such that a person of ordinary skill in the art would have had good reason to pursue the known options within his or her technical grasp; and
- One should be cautious of using hindsight in evaluating whether a claimed invention would have been obvious.

31. I further understand that, in making a determination as to whether the claimed invention would have been obvious to a person of ordinary skill, the Board may consider certain objective factors if they are present, such as: commercial success of products practicing the claimed invention; long-felt but unsolved need; teaching away; unexpected results; copying; and praise by others in the field. These

factors are generally referred to as "secondary considerations" or "objective indicia" of nonobviousness. I understand, however, that for such objective evidence to be relevant to the obviousness of a claim, there must be a causal relationship (called a "nexus") between the claim and the evidence, and that this nexus must be based on a novel element of the claim rather than something in the prior art. I also understand that even when they are present, secondary considerations may be unable to overcome primary evidence of obviousness (such as motivation to combine with predictable results) that is sufficiently strong.

IV. BACKGROUND OF THE TECHNOLOGY

32. The '053 patent is directed to "contactless smartcard devices," namely a mobile computing device that can be used in NFC smartcard applications. '053 patent, 1:40–43, 9:21–27. The mobile device includes a smartcard controller and active transmit driver circuit, powered by the mobile device power source, and an antenna tuned to 13.56 MHz to communicate with an NFC reader. '053 patent, 7:15–35, 15:56–16:6, 17:25–40.

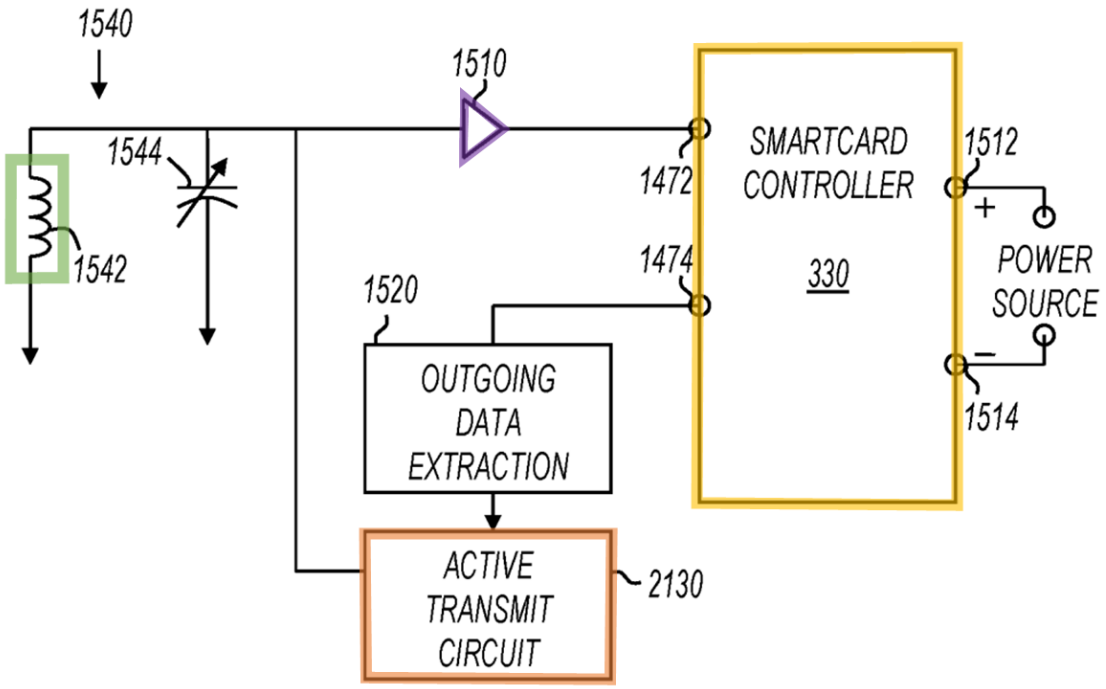

FIG. 21

’053 patent, Fig. 21.

33. But the ’053 patent admits that a power source, a smartcard controller, an antenna turned to 13.56 MHz, and an active transmit driver circuit were each known. ’053 patent, 1:45–55, 3:7–9, 2:18–39, 1:45–55, 16:35–40 (admitting an RFID tag powered by “a local power source,” “smartcard controllers,” “tag antenna[s]…operat[ing] at 13.56 MHz,” “active…transmi[ssion],” and “Load modulation driver circuits” as prior art).

34. During prosecution, in allowing the Challenged Claims, the Examiner concluded the prior art under consideration failed to teach “an antenna tuned to operate at substantially 13.56 MHz, wherein the antenna interacts with a Near Field Communication (NFC) reader” and “an active transmit driver circuit coupled to the

power source to receive power, wherein the active transmit driver circuit affects transmission of data between the antenna and the NFC reader." *See* Section V.B.

35. But the concepts of tuning an NFC-enabled mobile device antenna to 13.56 MHz and using active transmission circuits to drive communication with an NFC reader were known prior to the '053 patent. For example, Bangs discloses an NFC-enabled mobile device comprising a controller, and an active transmit driver circuit each coupled to be powered by the mobile device battery. Bangs [0041], [0046], [0049]–[0050], Fig. 2. The NFC-enabled mobile device further includes an antenna, tuned to 13.56 MHz, that the active transmit circuit drives to transmit data to an NFC reader device. Bangs, [0070], Fig. 2, Fig. 3. Figure 2 is a functional diagram of NFC communicator 100a with components 120 providing NFC functionality coupled to an antenna circuit 102, while Figure 3 provides a functional diagram of antenna circuit 102.

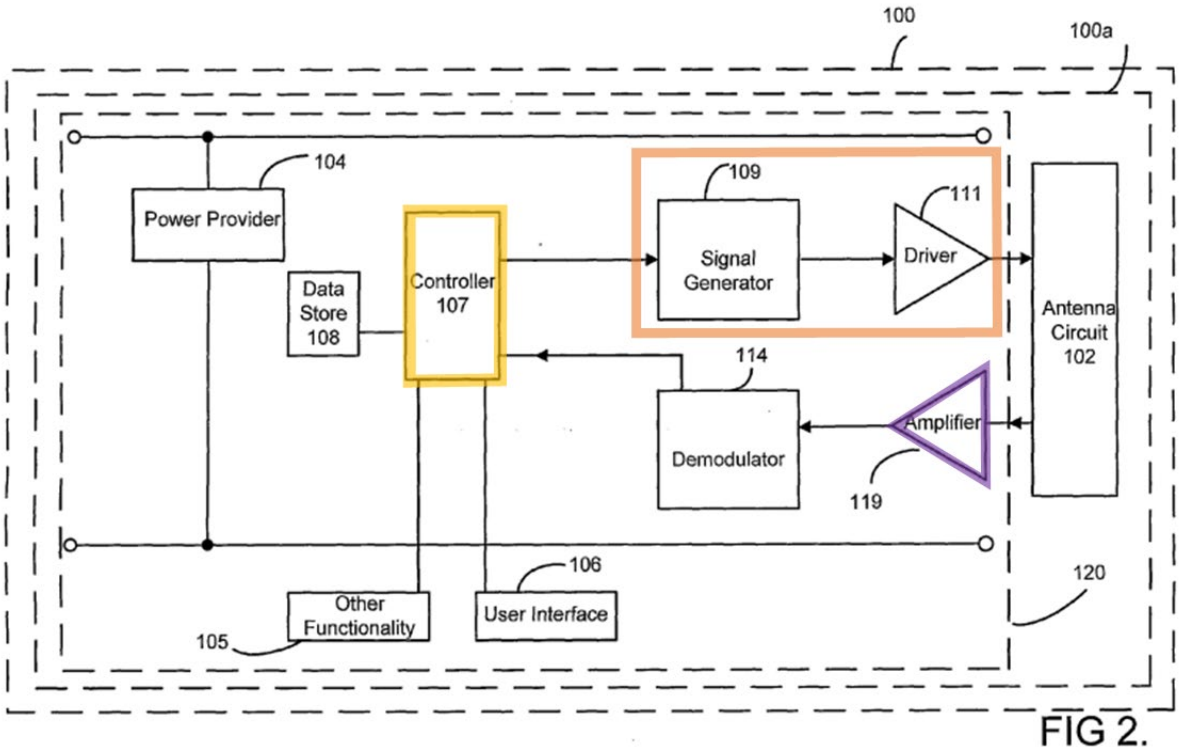

FIG 2.

Bangs, Fig. 2.

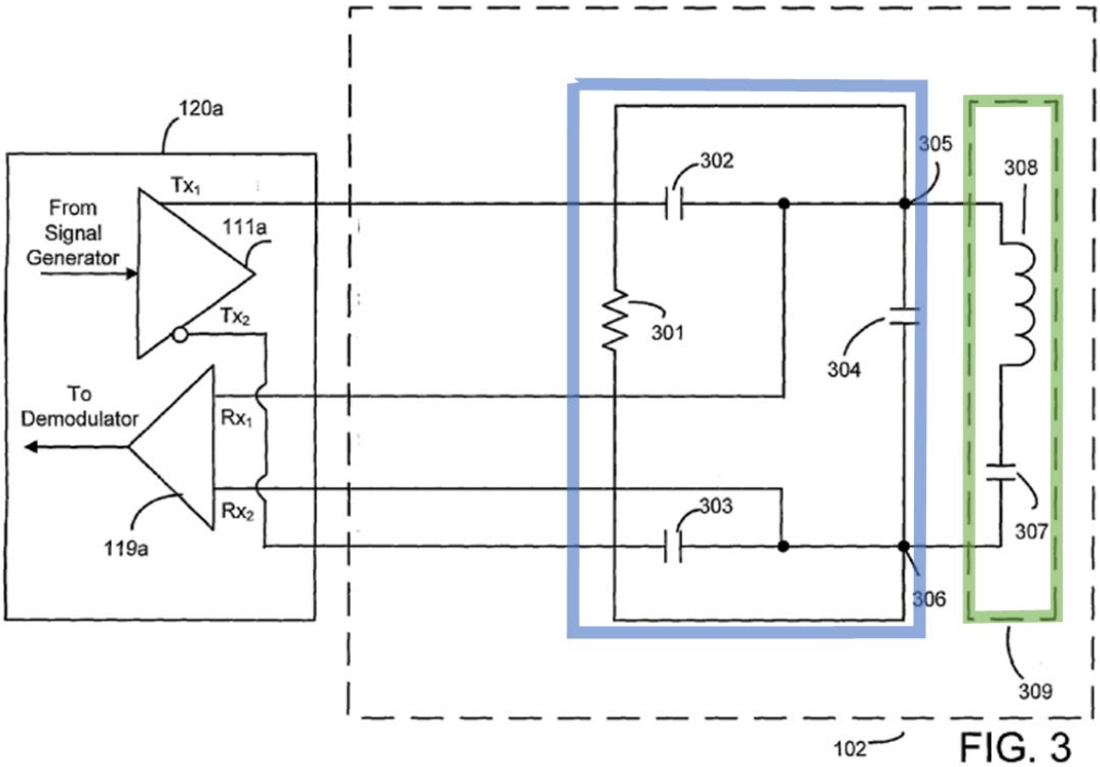

FIG. 3

Bangs, Fig. 3.

36. As I discuss below, the claims of the ’053 patent are anticipated by and/or obvious over the prior art. Further, there were no technological barriers to combining these teachings from the prior art and a person of ordinary skill in the art would have been motivated to combine these teachings and would have understood that the combination would have yielded predictable results.

V. THE ’053 PATENT

A. The ’053 Patent Overview

37. The purported “invention” of the ’053 patent relates to “contactless smartcard devices” implemented in a mobile device comprising “a **smartcard controller** and an **inductive element** capable of interacting with an **NFC reader**” according to “the ISO 14443 standard for contactless NFC devices.” ’053 patent, 1:41-43, 5:47–56, 9:21–38. The ’053 patent purports to solve the problem of implementing NFC communication “in smaller mobile devices” to “allow smartcard controller functions to be accessed” from a mobile device, such as a “mobile phone with an integrated loop antenna”. ’053 patent, 2:40–42, 3:11–14, 5:9–16, 11:64–67.

38. The mobile device comprises a “**smartcard controller 330**,” “a local **power source**,” “**antenna 1542**,” “**amplifier 1510**,” and “**active transmit driver circuit 2130**.” ’053 patent, 1:47–55, 15:56–16:6, 16:41–50, 17:25–40, Fig. 21. **Smartcard controller 330** processes a received “memory access command.” *See*

’053 patent, 8:17–34, 14:19–27.

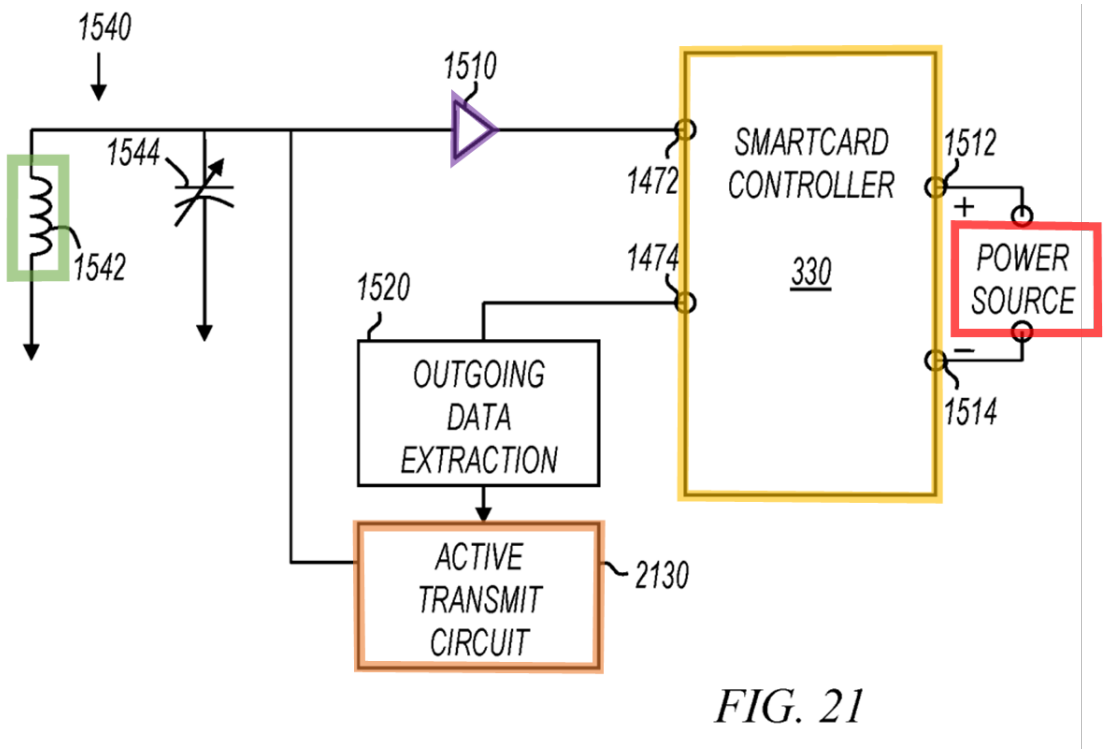

39. As shown in Figure 21 above, “**amplifier 1510**” is coupled between the **smartcard controller 330** and **antenna 1542**. ’053 patent, 15:56–16:6, Fig. 21. “**Antenna 1542** is a small inductive element” that forms a “tuned circuit” with capacitor 1544 “resonant at…13.56 MHz,” the frequency at which prior art “controllers provide RFID functionality.” ’053 patent, 9:21–37, 15:59–63. “**Amplifier 1510** amplifies the voltage received at **antenna 1542**” and provides “the amplified voltage…to the **smartcard controller**.” ’053 patent, 15:56–16:6. The ’053 patent admits “suitable” prior art **smartcard controllers** include “[t]he ‘SmartMX’ family of controllers available from NXP Semiconductors N.V.” ’053 patent, 9:21–37.

40. The mobile device further comprises "**active transmit driver circuit 2130**" to "actively transmit a signal" and thus "increase" the RFID card's "usable distance when [the] **smartcard controller 330** is transmitting" data. '053 patent, 17:25–40. Specifically, **active transmit driver circuit 2130** includes circuits "to form a signal that mimics…[a modulated] interrogating RF field." '053 patent, 17:25–40.

41. The **smartcard controller 330**, **amplifier 1510**, and the **active transmit driver circuit 2130** are powered by the host mobile device. '053 patent, 9:39–47, 17:37–40. The '053 patent describes "a power delivery mechanism from the host" **power source** to the claimed components include "[c]ycling power" through an "interface" with the host mobile device. '053 patent, 7:25-35, 9:39–64, 15:4-12, 15:43–55. The '053 patent admits that powering a tag device with a "**local power source**," such as a **battery**, was known in the prior art. '053 patent, 1:46–55.

42. The '053 patent explains the **smartcard controller** "is compatible with passive RFID tag **readers in NFC applications**" and as such, the mobile device is "capable of interacting with an **NFC reader**." '053 patent, 5:47–56, 9:21–38. Thus, the mobile device may be used in NFC applications including "with a point-of-sale payment device to effect mobile payments" and "wave-and-pay ticketing in mass transit environments." '053 patent, 6:14–20.

B. The Prosecution History

43. In formulating my opinions, I considered the contents of the prosecution histories of the ’053 patent and ’722 patent. *See* Exs. 1002 and 1011.

1. ’053 Patent Prosecution

44. The ’053 patent issued from U.S. Pat. App. 17/179,237 (“the ’237 Application”), filed February 18, 2021. The ’237 Application claims priority, through a chain of continuations and a continuation-in-part, to U.S. Pat. App. No. 12/188,346 (“the ’346 Application”) filed August 8, 2008.

45. During prosecution of the ’237 Application, following approval of the Applicant’s terminal disclaimer to overcome a nonstatutory double patenting rejection over the related U.S. Pat. No. 9,489,608, the ’053 patent issued without further rejection. *See* ’053 File History, 155–59, 259–63, 396–98. The Examiner’s Notice of Allowance states that the Claims were allowed because: “The prior art fail to teach: ‘an antenna tuned to operate at substantially at 13.56 MHz, wherein the antenna interacts with a Near Field Communication (NFC) reader external to the mobile phone device; and an active transmit driver circuit coupled to the power source to receive power, wherein the active transmit driver circuit affects transmission of data between the antenna and the NFC reader.” ’053 File History, 397.

2. ’722 Patent Prosecution

46. In formulating my opinions, I considered the contents of the

prosecution history of the ’722 patent. *See* Ex. 1011. The ’722 patent issued from U.S. Pat. App. 14/517,575 (“the ’575 Application”), filed October 17, 2014. The ’575 Application claims priority, through a chain of continuations and a continuation-in-part, to the ’346 Application filed August 8, 2008.

47. The ’053 patent claims contain claim language that overlaps with the claims of U.S. Patent No. 9,483,722 (“the ’722 patent”), a related patent that shares the same specification as the ’053. ’722 patent (Ex.1016). The Related U.S. Application Data section of the ’722 patent states it is a continuation of U.S. App. No. 14/460,647 (filed August 15, 2014) (“’647 Application”). Ex. 1016. The Related U.S. Application Data section of the ’053 patent also indicates that it is related to the ’647 Application: it states the ’053 patent is a continuation of U.S. App. No. 16/791,609, which is a continuation of U.S. App. No. 16/393,275, which is a continuation of U.S. App. No. 15/904,328, which is a continuation of U.S. App. No. 15/338,436, which is a continuation of U.S. App. No. 14/517,585, which is a continuation of the ’647 Application. Ex. 1001.

48. During prosecution of the ’575-Application, the Examiner relied on prior art disclosure of controlling circuitry in integrated circuits (e.g., ISO 14443-compliant contactless IC card) to satisfy the “smartcard controller” limitations of the pending claims. ’722 File History, 1579, 1696. For example, in the first office action, the Examiner relied on Kowalski’s (U.S. Patent No., Ex.1018) disclosure of

"central processor 311" of a mobile phone to show a "smartcard controller." '722 File History, 1579 ("Kowalski discloses a mobile phone comprising a smartcard controller (311)."); Ex.1018, 14:15, 14:50-58 ("central processor 311" of "mobile phone"), 1:25-35 ("NFC component" "integrated into a mobile phone 15" implements "contactless communication protocols" such as "ISO-1444-A, ISO 14443-B"). In the second office action, the Examiner additionally pointed to Park's (U.S. Patent Appl. Pub. 2005/0224589, Ex.1017) disclosure of a "controller 130" within an "SD memory card having functions of a contactless integrated circuit (IC) card" to show "smartcard controller." '722 File History, 1696 ("Park…discloses a smartcard with an amplifier to amplify the received signal to provide an amplified signal to the smartcard controller [0052]"); Ex.1017, ¶¶ 3, 17, 52, Fig. 1 ("controller 130" is within "SD memory card 100 having functions of a contactless integrated circuit (IC) card (ISO 14443 Types A and B)"). Applicant did not contest that the prior art "processor" or "controller" satisfied the claimed "smartcard controller," instead amending the claims to overcome both prior art rejections. '722 File History, 1655, 1716 (amending claims "to overcome" prior art rejections without traversal).

C. Priority Date of the '053 Patent

49. Based on my understanding of a priority date for a claim described in Section III.A above, the Challenged Claims are not entitled to a priority date before March 1, 2011, the filing date of the '341 Application. The '341 Application is a

continuation-in-part of the earlier filed ’346 Application, from which the ’053 patent purports to claim priority, and is the only ’346 Application child application included in the ’053 patent priority chain.

50. The ’346 Application, however, does not provide written description support for at least the following independent claim limitations: “an active transmit driver circuit coupled to the power source to receive the power, wherein the active transmit driver circuit affects transmission of data between the antenna and the NFC reader” (’053 patent claim 1), “coupling…an active transmit driver circuit to a power source of the mobile device,” “providing power to…the active transmit driver circuit,” “coupling the active transmit driver circuit to an antenna of the mobile device,” and “driving transmission of data by the active transmit driver circuit” (’053 patent claim 17). The challenged independent claims and thus each of the Challenged Claims recites at least one of these limitations.

51. The ’346 Application does not disclose an “active transmit driver circuit.” ’053 patent, 15:66–16:1, 17:25–40. *See generally* Ex.1009 (’346 Application File History), 40-78 (as filed original specification). While the 346 Application discusses the inclusion of a smartcard controller in a host device and it makes no mention of the ’053 patent claimed circuitry for affecting transmission of data to an NFC reader. *See generally,* Ex.1009, 40-78. In its discussion of the background art, the ’346 Application makes cursory mention of prior art “Active

tags" that have "a local power source" and "generally transmit information…using a locally generated RF carrier." Ex.1009, 41. But there is no explanation of how this is done, let alone the disclosure of an "active transmit driver circuit" ('053 patent, cls. 1, 17) for active transmission as claimed in the '053 patent. *See generally* Ex.1009, 40-78. Moreover, there is no disclosure of the claimed connections or functionality of the claimed "active transmit driver circuit." *Id*.

52. The '053 patent characterizes the '341 Application, filed March 1, 2011 and identified in the '053 patent priority chain, as a "continuation" of the '346 Application. '722, page 2. On the other hand, the Application Data Sheet filed during prosecution of the '341 Application confirms the '341 Application is a continuation-in-part of the '346 Application. Ex. 1010 ('341 Application File History), 39–42. The "Related U.S. Application Data" listed on the related '722 and '965 patents characterize the '341 Application as a continuation-in-part of the '346 Application. Ex. 1016 at 1; Ex. 1013 at 1. I have been asked to compare the '341 Application and the '346 Application, and a redline between these applications confirms that there are a number of disclosures that are included in the '341 Application specification but not in the '346 Application specification. *See* Ex. 1012. The '341 Application further includes sixteen additional figures, relating to circuitry integrating a smartcard controller into a host communications device, that are not included in the '346 Application.

VI. LEVEL OF ORDINARY SKILL IN THE ART

53. In rendering the opinions set forth in this declaration, I was asked to consider the patent claims and the prior art through the eyes of a person of ordinary skill in the art at the time of the alleged invention. I understand that the factors considered in determining the ordinary level of skill in a field of art include the level of education and experience of persons working in the field; the types of problems encountered in the field, the teachings of the prior art, and the sophistication of the technology at the time of the alleged invention. I understand that a person of ordinary skill in the art is not a specific real individual, but rather is a hypothetical individual having the qualities reflected by the factors above. I understand that a person of ordinary skill in the art would also have knowledge from the teachings of the prior art, including the art cited below.

54. Upon consideration of these factors, and based on my knowledge and experience in the field and my review of the ’053 patent and file history, I believe that a person having ordinary skill in the art in this matter would have had a Bachelor’s degree in computer science, computer engineering, electrical engineering, or a similar field, with 2–3 years of experience in smartcards and contactless communications. Additional graduate education could substitute for professional experience, or significant experience in the field could substitute for

formal education. I believe this is the appropriate level of skill whether the claims are entitled to priority as of August 8, 2008 or March 1, 2011.

55. Based on my experiences, I have at least the skills of a person having ordinary skill in the art as well as a good understanding of the capabilities of a person having ordinary skill in the art. To be clear, all of my opinions in this declaration are from the perspective of one of ordinary skill in the art as I have defined it here during the relevant timeframe.

VII. CLAIM CONSTRUCTION

56. I have been instructed that the Challenged Claims of the ’053 patent are to be given their plain and ordinary meaning as understood by one of ordinary skill in the art at the time of the alleged invention in light of the specification and the prosecution history pertaining to the patent. I have followed these principles in my analysis set forth in this document.

57. I understand that the parties have not proposed constructions for the ’053 patent in the Texas Case.

VIII. GROUNDS OF UNPATENTABILITY

58. As I explain above in Section IV, circuitry for incorporating contactless NFC and smartcard functionality into a mobile device was well-known in the art.

59. In this section, I will explain why the teachings or combinations of teachings from the following references anticipate and/or render obvious each of the Challenged Claims:

Name	Exhibit	Publication	Filed	Published/ Issued
Bangs	1004	US 2010/0112941	3/20/2008	5/6/2010
Kerdraon	1006	US 2009/0215489	2/26/2009	8/27/2009
Koh	1007	US 2008/0073426	9/24/2006	3/27/2008
Fisher	1008	US 2007/0156436	8/25/2006	7/5/2007

I have been instructed to assume that each of these references qualifies as prior art.

60. As I explain below, the Challenged Claims are invalid based upon the following prior art grounds:

- **Ground 1:** Challenged Claims 1–8 and 17–20 of the ’053 patent are anticipated and/or rendered obvious by **Bangs**.
- **Ground 2**: Challenged Claims 1–8 and 17–20 of the ’053 patent are rendered obvious by **Bangs** in view of **Kerdraon**.
- **Ground 3**: Challenged Claims 1–8 and 17–20 of the ’053 patent are rendered obvious by **Bangs** in view of **Koh**.
- **Ground 4**: Challenged Claims 2–4 and 19–20 of the ’053 patent are rendered obvious by **Bangs** in view of **Fisher**.
- **Ground 5**: Challenged Claims 2–4 and 19–20 of the ’053 patent are rendered obvious by **Bangs** in view of **Kerdraon** and **Fisher**.
- **Ground 6**: Challenged Claims 2–4 and 19–20 of the ’053 patent are rendered obvious by **Bangs** in view of **Koh** and **Fisher**.

61. It is my opinion that Challenged Claims of the ’053 patent are unpatentable as I explain below. I note that in this discussion, I may focus on the particular language in the specific claims, but it should be understood that my analysis applies to the corresponding elements of all Challenged Claims containing identical or substantially identical language.

IX. SPECIFIC GROUNDS FOR CHALLENGE

62. As I explain above in Section IV, although the ’053 patent purports to have invented circuitry for incorporating contactless NFC and smartcard functionality into a mobile device, such devices were well-known in the art. As I describe below, the cited prior art provides these teachings.

63. In this section, I explain why claims 1–8 and 17–20 of the ’053 patent are anticipated and/or rendered obvious by the teachings of Bangs, Kerdraon, Koh, and Fisher. I note that, in this discussion, I may focus on the particular language in specific claims, but it should be understood that my analysis applies to the corresponding limitations of all claims containing identical or substantially identical language.

A. GROUND 1: BANGS ANTICIPATES AND/OR RENDERS OBVIOUS CLAIMS 1–8 AND 17–20

1. Overview of Bangs (Ex. 1004, U.S. Patent App. Pub. 2010/0112941)

64. Bangs discloses an “**NFC communication enabled…mobile**

telephone" with antenna circuit 102 comprising **antenna element 309** is "compatible" with **"initiating" NFC communicators**, such as **computer 2**, operating "in accordance with the protocols set out in various standards," including ISO/IEC 14443. [0052], [0057].

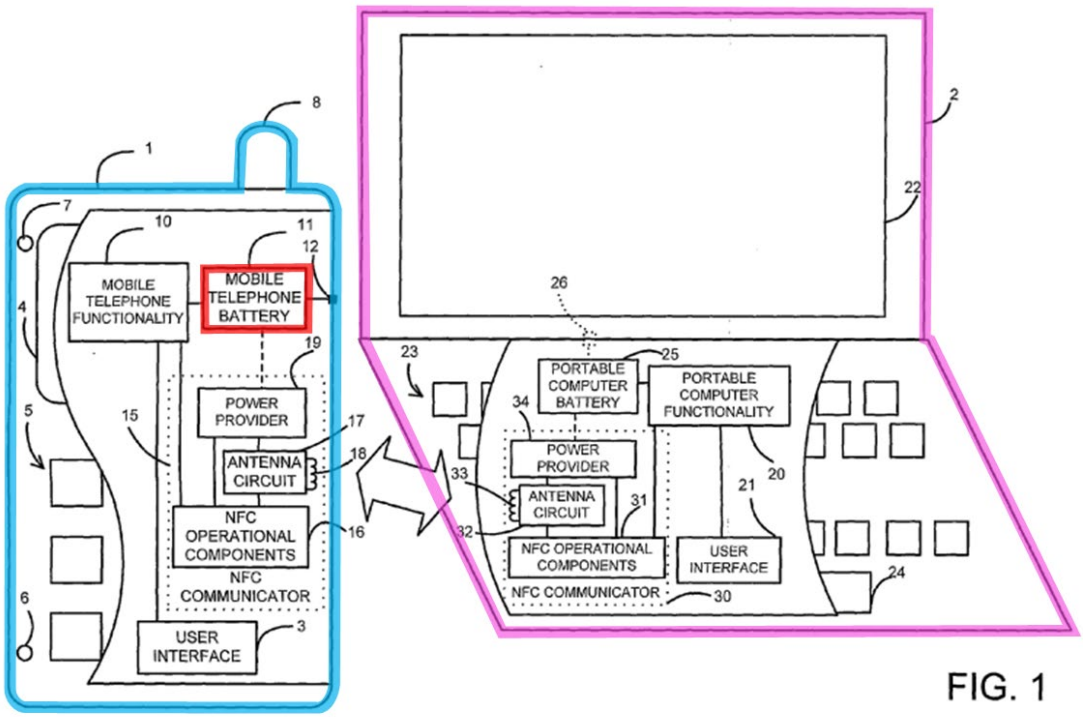

FIG. 1

[0035], Fig. 1.

65. The NFC functionality of the **mobile phone** is provided by an "NFC communicator 100a," comprising the "NFC operational components" shown in Figure 2. [0006], [0046]. NFC communicator 100a (in Figure 2) corresponds to NFC communicator 15 of **mobile phone 1**, but Figure 2 provides additional functional detail on the "NFC operational components 16 and 31" therein that comprise components providing NFC functionality 120 coupled to antenna circuit

102. [0039], [0046]. Figure 3 further provides additional detail of antenna circuit 102. [0056]-[0057].

66. The NFC components of the **mobile phone** include "**controller 107**," a power provider 104 coupled to "**battery 11**," "**antenna element 309**" (within antenna circuit 102), "**amplifier 119**," and "**signal generator 109**" and "**driver 111**." [0046], [0049], [0057], Figs. 2, 3. **Controller 107** is a smartcard controller that "control[s] overall operation of the NFC communicator," which operates "in accordance with" "various standards" for near-field RF communication, such as "ISO/IEC 14443." [0051], [0052], [0005]. **Controller 107** is coupled to a data store to process and store data "transmitted from and/or…received by" the **NFC-enabled mobile phone**. [0051]. Bangs acknowledges that "[s]ome areas of application are payment systems" for NFC communicators are "payment systems" and "ticketing systems." [0006].

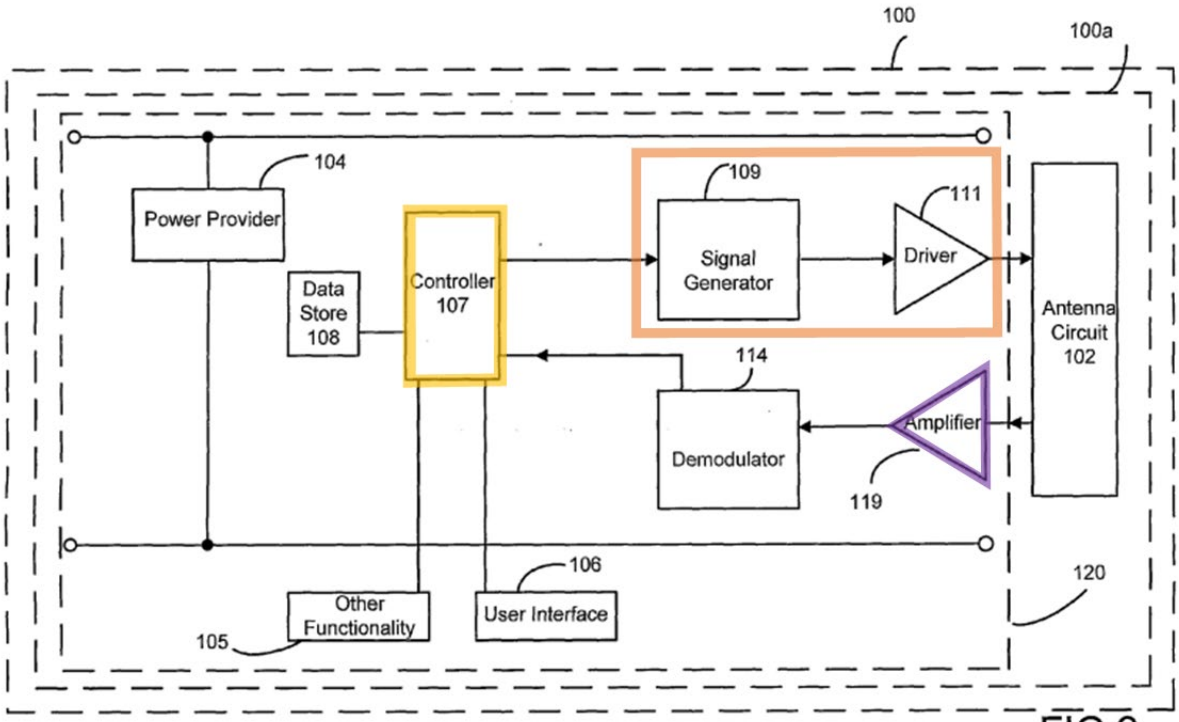

FIG 2.

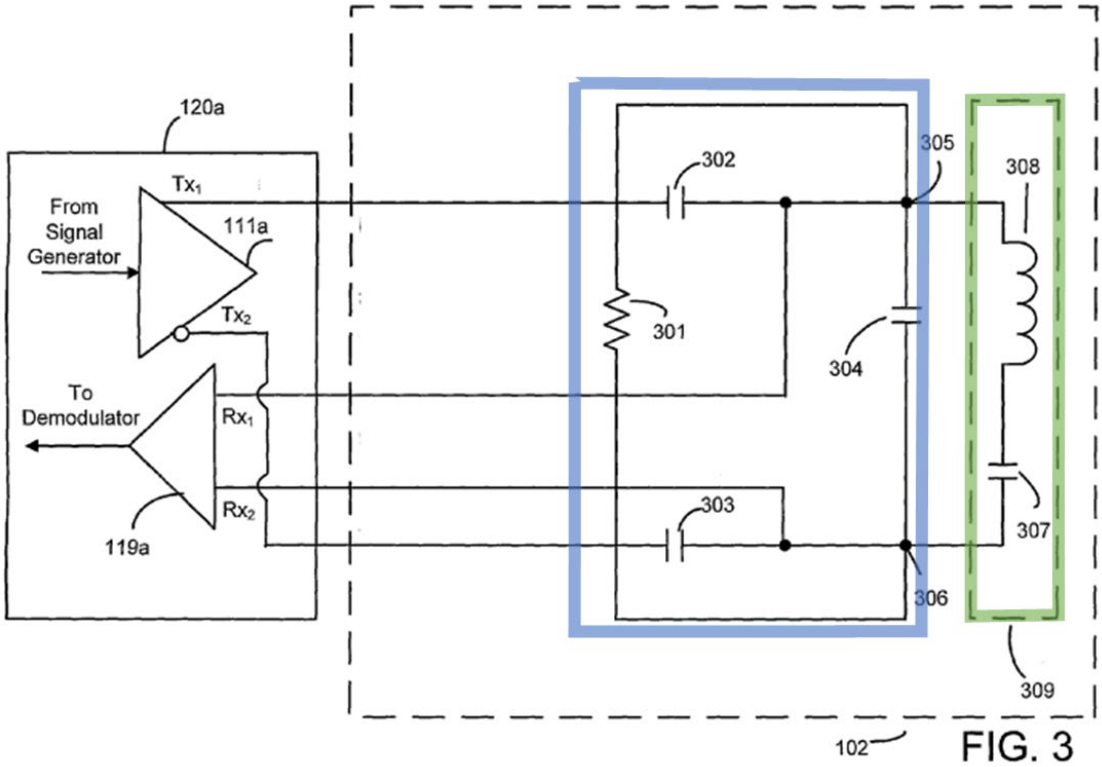

FIG. 3

67. As shown in Figures 2-3 above, "**amplifier 119**" is coupled between

antenna element 309 and demodulator 114, which is coupled to **controller 107**. [0049], [0057]. Antenna circuit 102 comprising **antenna element 309** "is tuned to…13.56 MHz," the frequency at which "NFC communicators commonly operate." [0052], [0057], [0070]. **Amplifier 119** amplifies the received signal, and demodulator 114 demodulates the signal to extract data, and "suppl[ies] the thus-extracted data to the **controller 107**." [0049]. As such, the **NFC-enabled mobile phone** can communicate with **"initiating" NFC communicators, *i.e.,* NFC readers**, used in various applications including "payment systems, ticketing systems," "ticket checking systems," etc. [0006].

68. NFC communicator 100a's "transmitter circuitry" comprises circuitry to effect "active communication mode." [0068]. "**[S]ignal generator 109 coupled via…driver 111** to the antenna circuit 102" "drive[s] the antenna circuit 102" comprising **antenna element 309** "to initiate or generate an RF-H field." [0050], [0057], [0070]-[0071].

69. Bangs discloses the **controller 107**, **amplifier 119**, and **signal generator 109 and driver 111** are powered by the **mobile phone's** "**battery 11**." [0036], [0047]. Power provider 104, shown in Figure 2 above, comprises "coupling[s] to derive power from…**battery 11**" and supply it to the NFC communicator components. [0041], [0047].

2. Invalidity of Claims 1–8 and 17–20 Over Bangs

70. As I discuss below, the Challenged Claims are anticipated by and/or rendered obvious by Bangs. In addition to my discussion in Section IX.A.1, the following discussion identifies example disclosures followed by bulleted excerpts that each disclose the Challenged Claims.

a. Element [1.pre]

71. **Element [1.pre] recites "A mobile device comprising."** This element is met by Bangs.

72. To the extent the preamble is limiting, Bangs discloses a **mobile device** (*e.g.,* "mobile telephone"). *E.g.*, Bangs:

- **Fig. 1:**

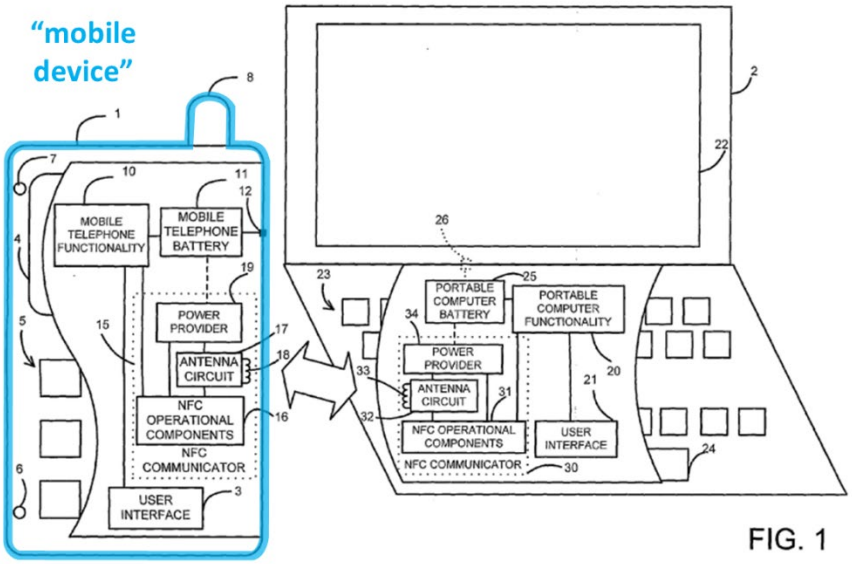

FIG. 1

- **Fig. 2:**

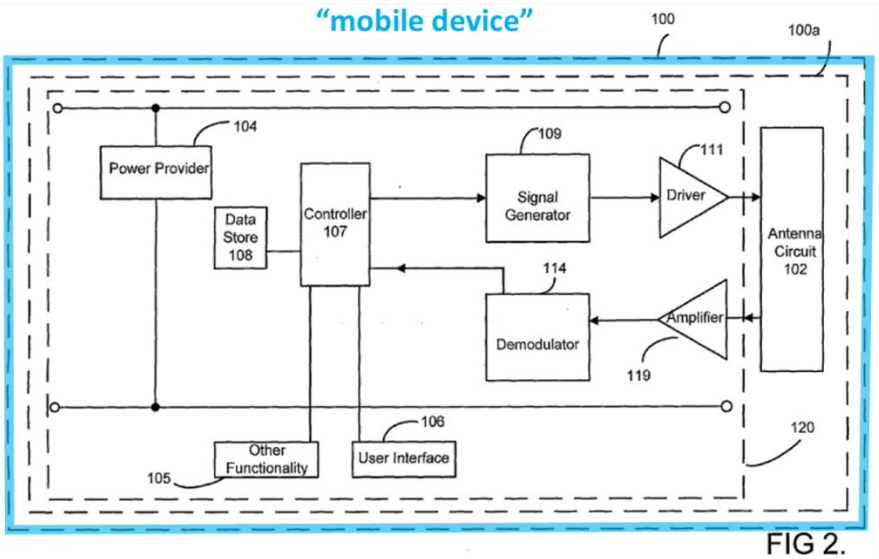

FIG 2.

- **[0006]:** "***Near field RF communicators may be*** provided as standalone or discrete devices or may be ***provided as standalone or discrete devices or may be*** incorporated within or coupled to larger electrical devices or host devices (referred to below as ***near field RF communications enabled devices***)…."

- **[0035]:** "As shown in FIG. 1, ***one NFC communications enabled device comprises a mobile telephone (cellphone) 1*** and the other NFC communications enabled device comprises a portable computer 2 such as a notebook or laptop computer."

- **[0038]: "**[A]s shown in FIG. 1, ***both NFC communications enabled devices 1 and 2 have an NFC communicator 15 and 30***. As shown, the NFC communicators 15 and 30 are incorporated within the larger devices and, as with the other functional blocks, may be discrete entities within the host devices or may be provided by features dispersed throughout or integrated within the host device or a part of the host device."

- **[0039]:** "***Each NFC communicator*** 15 and 30 ***comprises NFC operational components*** 16 and 31 for, as will be described below, ***enabling control of the NFC functionality*** and generation, modulation and demodulation of an RF signal."

- **[0045]:** "FIG. 2 shows a functional block diagram of ***an NFC communications enabled device 100 in accordance with the invention*** to illustrate in greater detail one way in which the NFC operational

components of an NFC communications enabled device embodying the invention may be implemented.

- **[0046]:** "In this example, ***the NFC communications enabled device 100 comprises an NFC communicator 100a*** having NFC operational components including an antenna circuit 102 and NFC functionality 120 comprising power provider 104, controller 107, data store 108, receiver circuitry and transmitter circuitry."

- **[0064]:** "[T]he NFC functionality 120a will be formed as one or more integrated circuits."

73. Bangs further discloses an "NFC communications enabled device," such as "mobile telephone 1," which includes an "NFC communicator 15." [0006], [0035], [0038], Fig. 1. As further illustrated in the "functional block diagram" of Figure 2, "NFC communications enabled device 100 comprises an NFC communicator 100a," which contains various "NFC operational components." [0045]-[0046], Fig. 2.

b. Element [1.a]

74. **Element [1.a] recites "a power source."** This element is met by Bangs.

75. Bangs discloses **a power source** (*e.g.,* "battery 11"). *E.g.*, Bangs:

- **Fig. 1:**

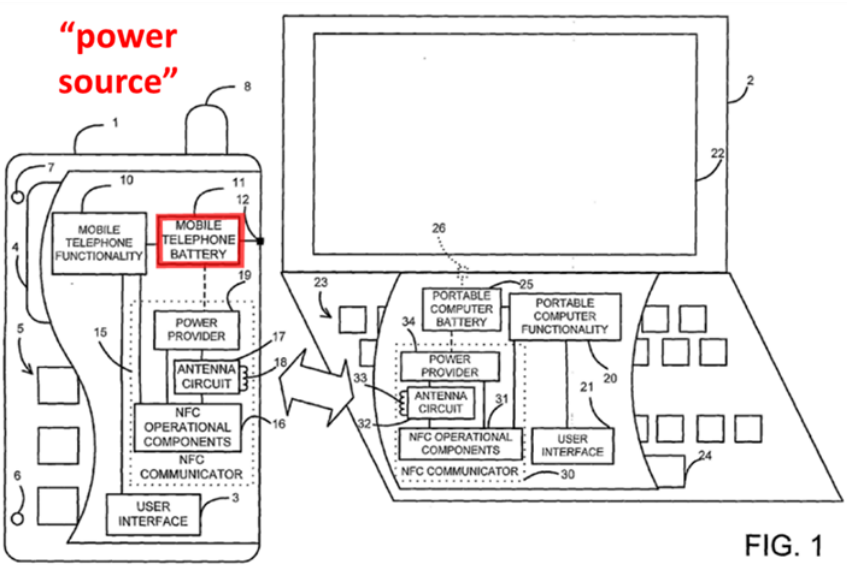

FIG. 1

- **Fig. 2:**

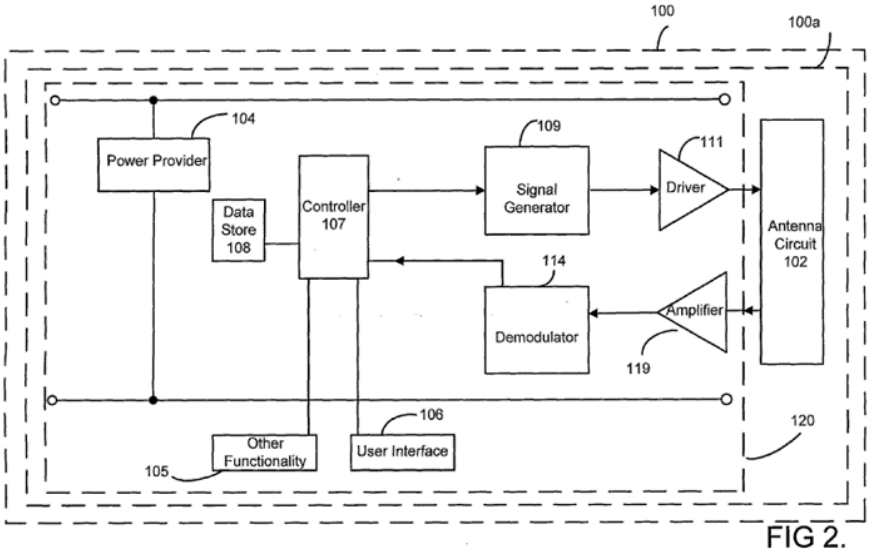

FIG 2.

- **[0041]:** "***Each NFC communicator*** 15 and 30 also ***comprises a power provider*** 19 and 34. ***The power providers*** 19 and 34 ***may be power supplies within the host device***…. As another possibility or additionally as shown by dashed lines in FIG. 1, one or both of ***the power providers*** 19 and 34 ***may simply comprise a coupling to derive power from the corresponding device battery 11*** or 25."

- **[0047]:** "…In the interests of simplicity, ***power supply couplings from the power provider 104 to other components*** are not shown ***in FIG. 2***."

- **[0036]:** "***The mobile telephone 1*** has the usual features of a mobile telephone…. The mobile telephone also ***has a chargeable battery 11*** coupled to a charging socket 12 via which a mains adapter (not shown) may be connected to enable charging of the battery 11."

76. See my discussion of the element [1.pre] above (Section IX.A.2.a). Bangs further discloses "mobile telephone 1" "has a chargeable battery 11." [0036], Fig. 1. The mobile telephone's NFC communicator includes "power provider 104" comprising "a coupling to derive power from…battery 11" to provide the power to the components of the NFC communicator (shown in Figure 2). [0041], [0047], Fig. 2.

c. Element [1.b]

77. **Element [1.b] recites "a smartcard controller coupled to the power source to receive power."** This element is met by Bangs.

78. Bangs discloses a **smartcard controller** (*e.g.,* "controller 107" of "NFC communicator" compliant with ISO14443) **coupled to the power source to receive power** (*e.g.,* "coupl[ed] to derive power from…battery 11"). *E.g.*, Bangs:

- **Fig. 2:**

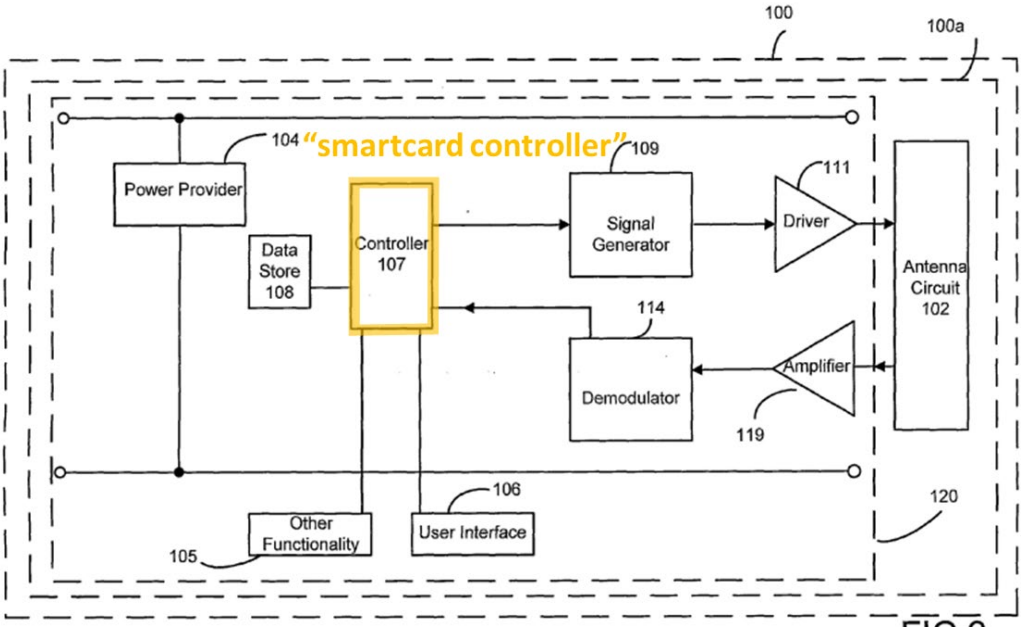

FIG 2.

- **[0005]:** "Examples of ***near field RF communicators are defined in various standards for example*** ISO/IEC 18092, ***ISO/IEC 14443***, ISO/IEC 15693 ISO/IEC 21481."

- **[0006]:** "***Some areas of application are payment systems, ticketing systems***, for example in tickets (for example parking tickets, bus tickets, train tickets or entrance permits or tickets) or in ticket checking systems, toys, games, posters, packaging, advertising material, product inventory checking systems and so on."

- **[0041]:** "***Each NFC communicator*** 15 and 30 also ***comprises a power provider*** 19 and 34. ***The power providers*** 19 and 34 ***may be power supplies within the host device***…. As another possibility or additionally as shown by dashed lines in FIG. 1, one or both of ***the power providers*** 19 and 34 ***may simply comprise a coupling to derive power from the corresponding device battery 11*** or 25."

- **[0046]:** "In this example, ***the NFC communications enabled device 100 comprises an NFC communicator 100a having*** NFC operational components…and ***NFC functionality 120 comprising*** power provider 104, ***controller 107***, data store 108, receiver circuitry and transmitter circuitry."

- **[0049]:** "In this example, the receiver circuitry comprises an amplifier 119 coupled to the antenna circuit 102 and ***a demodulator 114 coupled to*** the amplifier 119 and the ***controller 107 for*** amplifying and ***demodulating a modulated RF signal*** inductively coupled to the antenna circuit 102 from another near field RF communicator in near field range and for supplying the thus-extracted data to the controller 107 for processing."

- **[0051]:** "***The controller 107*** of the NFC functionality 120 ***is provided to control overall operation of the NFC communicator***. ***The controller 107 is coupled to the data store 108*** which is ***provided to store data (information and/or control data) to be transmitted from and/or data received by the NFC communications enabled device***. The controller 107 may be a microprocessor, for example a RISC processor or other microprocessor or a state machine. Program instructions for programming the controller and/or control data for communication to another near field RF communicator may be stored in an internal memory of the controller and/or the data store."

- **[0052]:** "The NFC communicator 100*a* may operate in an initiator mode (that is as an initiating near filed RF communicator) or a target mode (that is as a responding near field RF communicator), dependent on the mode to which the NFC communicator is set. The mode may be determined by the controller 107 or may be determined in dependence on the nature of a received near field RF signal. When in initiator mode, an NFC communicator initiates communications with any compatible responding near field RF communicator capable of responding to the initiating NFC communicator (for example an NFC communicator in target mode or an RFID tag or transponder) that is in its near field range, while when in target mode an NFC communicator waits for a communication from ***a compatible initiating near field RF communicator*** (for example an NFC communicator in initiator mode or an RFID initiator or transceiver). As thus used, ***compatible means*** operable at the same frequency and ***in accordance with the same protocols, for example in accordance with the protocols set out in various standards*** such as ISO/IEC 18092, ISO/IEC 21481, ***ISO/IEC 14443*** and ISO/IEC 15693. NFC communicators commonly operate at or around 13.56 MHz."

- **[0067]:** "In operation of the NFC communicator shown by Fig. 3, when the NFC communicator is acting as a target and is in passive target communication mode, then ***the NFC communicator will communicate*** any response ***to an initiator near field RF communicator*** in near field range by modulating the RF H field received from that near field RF communicator ***under the control of the controller 107***…."
- *See also* [0043], [0049], [0054].

79. See my discussion of the elements [1.pre] and [1.a] above (Sections IX.A.2.a and b). Bangs further discloses "NFC communicator 100a" included in host mobile telephone 1 (see [1.pre] (Section IX.A.2.a)) includes "controller 107…to control overall operation of the NFC communicator," which operates "in accordance with" "various standards" for near-field RF communication, such as "ISO/IEC 14443." [0051]–[0052], [0005]. For example, Bangs discloses that "controller 107 is coupled to the data store 108 which is provided to store data (information and/or control data) to be transmitted from and/or data received by the NFC communications enabled device," and notes that, for RF communicators that support ISO/IEC 14443, "[s]ome areas of application are payment systems, ticketing systems," etc. [0051], [0005]-[0006].

80. A person of ordinary skill in the art would have understood that Bangs' "controller 107" is a smartcard controller. Bangs' controller 107's use of the "ISO/IEC 14443" standard (e.g., [0051]) for contactless communication is consistent with the disclosure of a smartcard controller in the '053 patent. For example, the '053 discloses that exemplary "smartcard controller 330 may be a

device capable of implementing all or part of the ISO 14443 standard for contactless NFC devices." '053, 9:25-27. This is also consistent with the Indeed, during prosecution of the related '722 patent. *See* Section V.B.2 ('722 Prosecution). During prosecution of the '722 patent, the Examiner found that Park's (Ex. 1017) disclosure of a "controller" within a memory card that has "ISO 14443"-compliant functionality satisfied the "smartcard controller" recited in the pending claims. Ex. 1011 at 1696 (citing Ex.1017, ¶ 52). The Examiner also found that Kowalski's (Ex. 1018) disclosure of a generic "central processor 311" in a mobile phone satisfied the claimed smartcard controller. '722 File History, 1579 ("Kowalski discloses a mobile phone comprising a smartcard controller (311)."); Ex.1018, 14:15, 14:50-58 ("central processor 311" of "mobile phone"), 1:25-35 ("NFC component" "integrated into a mobile phone 15" implements "contactless communication protocols" such as "ISO-1444-A, ISO 14443-B"). The Applicant did not dispute the Examiner's characterization of the claimed "smartcard controller." Ex. 1011 at 1655, 1716.

81. At minimum, it would have been obvious to implement Bangs' Bangs' controller 107 as a smartcard controller. Bangs discloses that, for RF communicators that support ISO/IEC 14443, "[s]ome areas of application are payment systems, ticketing systems," etc. [0051], [0005]-[0006]. These were understood to be smartcard applications. For example, in a 2007 textbook published by the well-

known Springer publishing company (that would have been accessible to a person of ordinary skill in the art, e.g., through a library or a bookstore) titled "Smart Cards, Tokens, Security and Applications," Keith Mayes and Konstantinos Markantonakis state that "[s]ome of the most notable applications" for "[s]mart cards" include "Banking," "Transport," and "Identity Cards/Passports"). Ex.1036 ("Smart Card Textbook"), 46, *see also* 116, 139, 49, 144-167 (discussing "Smart cards for Banking and Finance" to address fraud in magnetic stripe card technology), 49-50 ("use of smart cards in Transport is becoming a growth area because it offers flexibility, fraud reduction, speed," and noting "interesting is the use of multi-functional smart cards (e.g., credit card plus e-ticket[]) and mobile phones with contact-less card interfaces (NFC)" to may transport payment systems "more convenient and popular"), 50 ("the modern passport includes a smart chip which can be accessed as part of normal travel processes ").

82. And, a person of ordinary skill in the art would have understood that NFC communicators that implement contactless communication standards like ISO 14443 (like the NFC communicator 100a which is controlled by controller 107 in Bangs) are commonly used to operate as smartcards. *See, e.g.*, Ex.1036, 40 ("Near Field Communications (NFC)" refers to "a contactless/RFID interface for a mobile phone," which is "standardised functionality that allows the phone to act as a contactless smart card/RFID."), 337 ("[t]he popular Mifare range of

products…adhere[s] to Part 1-3 of ISO 14443 Type A"; "ISO 14443, titled *Identification Cards – Proximity Integrated Circuit Cards*," is "the standard choice for e-passports, credit cards, and most access control systems").

83. As such, a person of ordinary skill in the art would have been motivated to use Bangs's controller 107 as a smartcard controller to advantageously provide smartcard functionality in Bangs' mobile telephone without the need to carry a separate smartcard device. For example, in a December 2005 article for the journal elektrotechnik und informationstechnik published by German multinational publishing company Springer Science+Business Media (that would have been accessible to a person of ordinary skill in the art, e.g., through a library), Charles Dachs explains that smartcard integration in mobile phones "exploits two basic principles of modern society: everyone needs to pay for products and everyday services and just about everyone carries a phone." Ex. 1015 (Dachs) at 468. U.S. Patent App. Pub. No. 2004/0133787 (published on July 8, 2004) further describes the benefits of reducing the number of devices a user needs to engage in everyday transactions. Ex.1031, [0038] ("[R]educe the risk to the device holder due to loss of the device."). U.S. Patent No. 5,943,624 (issued on August 24, 1999) explains providing "smartcard functions" in a "cellular telephone" protects "smartcard electronics…from damage by the housing associated with the cellular telephone" and also eliminates the risk that a separate smartcard device "will be lost or stolen."

Ex.1023, 3:27–34, 1:9-30; Koh, [0032]-[0033] (disclosing that a "cellphone" that "is equipped with a RFID interface (e.g., ISO 14443)" includes a "Java based smart card" (e.g., "Smart MX (SMX) module") that runs an "operating system" that "provides security framework to control the access to the smart card").

84. Demodulator 114 "demodulat[es] a modulated RF signal…from another near field RF communicator" and "suppl[ies] the thus-extracted data to controller 107 for processing." [0049], Fig. 2. To the extent it is argued that the signal provided to the controller cannot be demodulated, controller 107 and demodulator 114 work together to process information in an interrogating field from another RF communicator and thus also collectively form a controller.

85. As I discussed in for element [1.a] (Section IX.A.2.b) above, components of NFC communicator 100a (including controller 107 and demodulator 114) are coupled to device battery 11 via power provider 104 to receive power.

d. Element [1.c]

86. **Element [1.c] recites "an antenna tuned to operate at substantially 13.56 MHz, wherein the antenna interacts with a Near Field Communication (NFC) reader external to the mobile device."** This element is met by Bangs.

87. Bangs discloses an **antenna tuned to operate at substantially 13.56 MHz** (*e.g.,* "antenna element 309" in "antenna circuit…tuned to…13.56 MHz"), **wherein the antenna interacts with a Near Field Communication (NFC) reader**

external to the mobile device (*e.g.,* "antenna element 309" "inductively coupled to the antenna of the other near field RF communicator," which is a "NFC communications" "reader[]" external to the "mobile telephone"). *E.g.*, Bangs:

- **Fig. 1:**

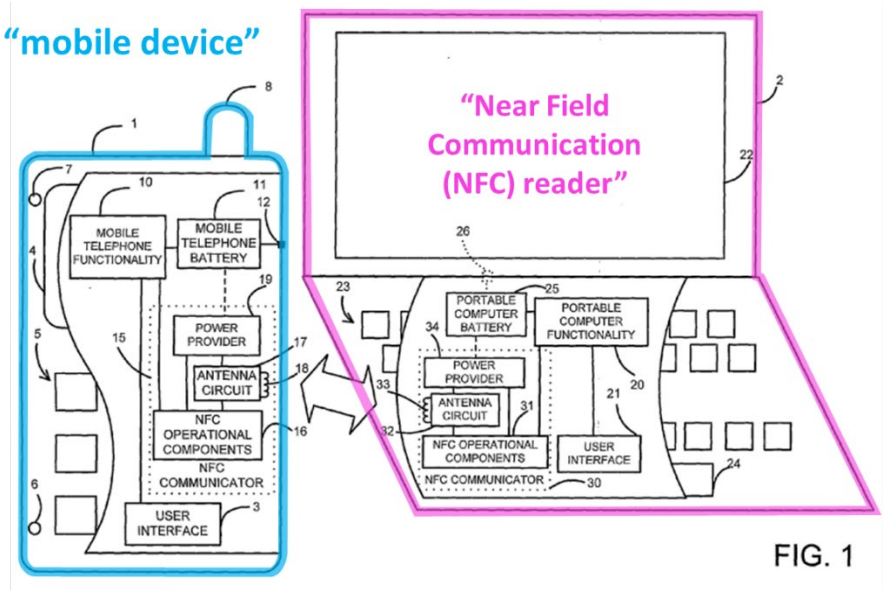

- **Fig. 3:**

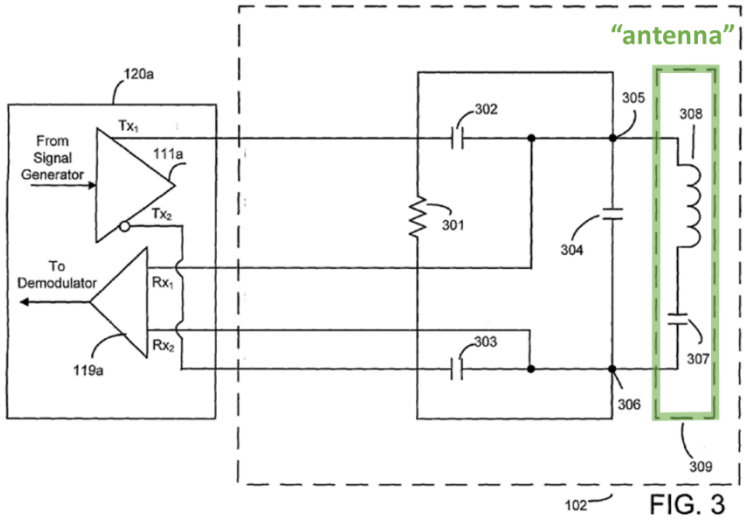

- **[0003]:** "***NFC communicators are*** a type of near field RF communicator that is ***capable of both initiating a near field RF communication***

(through transmission or generation of an alternating magnetic field) with another near field RF communicator ***and of responding to initiation of a near field RF communication by another near field RF communicator***. The term ***"near field RE* [*sic*: RF] *communicator" includes*** not only NFC communicators but also: ***initiating near field RF communicators such as RFID transceivers or readers (referred to*** below ***as RFID readers***) that are capable of initiating a near field RF communication…***and responding near field RF communicators such as RFID transponders or tags*** (referred to below as RFID tags) that are capable of responding to initiation of a near field RF communication by another near field RF communicator…. ***NFC communicators***…are able to ***communicate with other NFC communicators, RFID transceivers and RFID transponders***."

- **[0008]:** "NFC communicators need to be capable of both initiating an RF H field and of receiving an RF H field. Moreover a single design of NFC communicator may be used for many different applications and in some of those applications the NFC communicator may function like an RFID tag, in other applications ***the NFC communicator may function like an RFID reader*** and in other applications the NFC communicator may sometimes function like an RFID tag and sometimes function like an RFID reader."

- **[0035]:** "As shown in FIG. 1, ***one NFC communications enabled device comprises a mobile telephone (cellphone) 1 and the other NFC communications enabled device comprises a portable computer 2*** such as a notebook or laptop computer."

- **[0039]:** "***Each NFC communicator*** 15 and 30 ***also comprises an antenna circuit*** 17 and 32 ***comprising an inductor or coil*** in the form of an antenna 18 and 33. ***The antenna circuits*** 17 and 32 ***enable*** an alternating magnetic field (RF H field) generated by ***the antenna of one near field RF communicator*** 15 (or 30) by transmission of an RF signal (for example a 13.56 Mega Hertz signal) ***to be inductively coupled to the antenna of the other near field RF communicator*** 30 (or 15) when that antenna is within the near field of the RF signal generated by the one near field RF communicator 15 (or 30)."

- **[0046]:** "***[T]the NFC communications enabled device 100 comprises*** an NFC communicator 100a having NFC operational components including

an antenna circuit 102 comprising power provider 104, controller 107, data store 108, receiver circuitry and transmitter circuitry."

- **[0052]:** "…[W]hen in target mode an NFC communicator waits for a communication from ***a compatible initiating near field RF communicator*** (for example an NFC communicator in initiator mode or an RFID initiator or transceiver). As thus used, compatible ***means operable at the same frequency*** and in accordance with the same protocols, for example in accordance with the protocols ***set out in various standards*** such as ISO/IEC 18092, ISO/IEC 21481, ISO/IEC 14443 and ISO/IEC 15693. ***NFC communicators commonly operate at or around 13.56 MHz***."

- **[0057]:** "As shown in FIG. 3, ***antenna circuit 102 comprises an antenna element 309*** coupled in parallel with a first capacitor 304 to form a tank circuit (a parallel LC resonant circuit)."

- **[0058]:** "The ***antenna element 309 comprises an antenna coil element 308*** in series with a second capacitor 307 which second capacitor 307 is anti-phase to the antenna coil element 308 ***and affects a voltage resulting from inductive coupling of an RF H field to the antenna circuit***. As shown the antenna coil element 308 comprises a single antenna coil which may comprise one, two or more coils or loops."

- **[0070]:** "***When the NFC communicator is in the active communication mode***, the controller 107 (FIG. 2) will cause the signal generator 109 (FIG. 2) and driver 111a to drive the antenna circuit 102 to initiate or generate an RF-H field. The ***antenna circuit 102 is tuned to the required RF transmission frequency which***, for an NFC communicator operating in accordance with ISO 18092, ***is 13.56 MHz (Megahertz)***. The capacitors 302 and 303 add capacitance to bring the tuning closer to the required frequency."

- *See also* [0068], [0087].

88. See my discussion of the element [1.pre] above (Section IX.A.2.a). Bangs further discloses that NFC communicator 100a includes "antenna element 309" in "antenna circuit 102…tuned to…13.56 MHz." [0057], [0070]. The

"antenna element 309" (of "antenna circuit 102") enables "inductive[] coupl[ing]" with other NFC enabled devices external to the mobile telephone 1. [0035], [0039], [0058], [0070], Fig. 1. Bangs discloses that the NFC communicator 100a operates as a tag device "which…waits for a communication from" an "initiating near field RF communicator." [0052]. In this regard, Bangs explains that "initiating near field RF communicators" are "referred to below as RFID readers." [0003]. Moreover, Bangs defines "NFC communicators" (such as NFC communicator 100a) as "a type of near field RF communicator that is capable of both initiating a near field RF communication…with another near field RF communication and of responding to initiation of a near field RF communication by another near field RF communicator" (i.e., a reader). [0003]. Thus, Bangs' NFC communicator 100a is responsive to an external NFC reader that performs the "initiation."

e. Element [1.d]

89. **Element [1.d] recites "an active transmit driver circuit coupled to the power source to receive the power, wherein the active transmit driver circuit affects transmission of data between the antenna and the NFC reader."** This element is met by Bangs.

90. Bangs discloses an **active transmit driver circuit** (*e.g.,* "transmitter circuitry" for "active communication" "compris[ing] signal generator 109 coupled" to "driver 111") **coupled to the power source to receive the power** (*e.g.,* "coupl[ed]

to derive power from…device battery 11”)**, wherein the active transmit driver circuit affects transmission of data between the antenna and the NFC reader** (*e.g.,* “transmitter circuitry” including “signal generator 109,” “driver 111” for “active communication” “drive[s] the antenna circuit” comprising antenna element 309 to “generate an RF-H field” for “transmission” of “data to be communicated” to “NFC communications” “reader[]”)**.** *E.g.*, Bangs:

- **Figs. 2–3:**

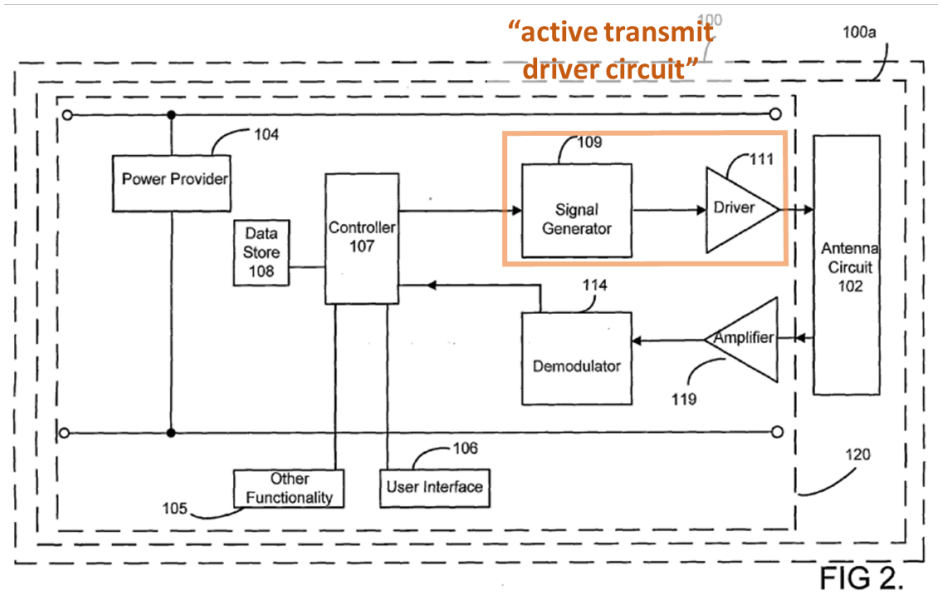

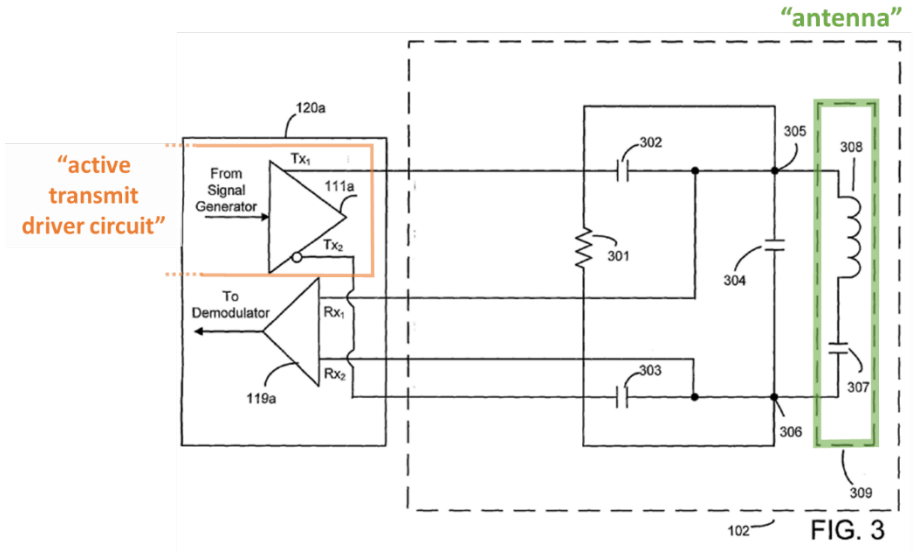

FIG. 3

- **[0003]:** "…The term 'near field RE [*sic*: RF] communicator' includes not only NFC communicators but also: ***initiating near field RF communicators such as RFID transceivers or readers (referred to below as RFID readers)*** that are capable of initiating a near field RF communication…***NFC communicators*** can act as both RFID transceivers and RFID transponders and ***are able to communicate with other NFC communicators, RFID transceivers and RFID transponders***."

- **[0004]:** "…When communication is by the 'passive communications mode', an initiator NFC communicator will generate an RF field and a target NFC communicator will respond by modulation of the received H field, usually by load modulation. ***When communication is by the 'active communications mode' the initiator NFC communicator and the target NFC communicator each use their own RF H field to enable communication***. The terms 'passive' and 'active' in the context of NFC communicators do not…define whether the RFID tags and readers have their own power supply or whether a power supply is derived from the received RF HF field."

- **[0041]:** "Each NFC communicator 15 and 30 also ***comprises a power provider*** 19 and 34. The power providers 19 and 34 may be power supplies within the host device or specific to the NFC communicators 15 and 30, for example a button cell battery, or other small battery. As another possibility or additionally as shown by dashed lines in FIG. 1, one or both of the power providers 19 and 34 may simply comprise a

coupling to derive power from the corresponding device battery 11 or 25."

- **[0046]:** "***[T]he NFC communications enabled device 100 comprises*** an NFC communicator 100a having…NFC functionality 120 comprising power provider 104, controller 107, data store 108, receiver circuitry and ***transmitter circuitry***."

- **[0050]:** "***[T]he transmitter circuitry comprises components for driving the antenna circuit 102 to transmit an RF signal*** and for modulating an RF signal ***to enable communication of data between near field RF communicators in near field range***. As shown in FIG. 2, ***the transmitter circuitry comprises a signal generator 109 coupled via a driver 111 to the antenna circuit 102***. In this example, the signal generator 110 is configured to cause modulation by gating or switching on and off the RF signal in accordance with the data to be communicated."

- **[0057]:** "As shown in FIG. 3, ***antenna circuit 102 comprises an antenna element 309*** coupled in parallel with a first capacitor 304 to form a tank circuit (a parallel LC resonant circuit)."

- **[0070]:** "When the NFC communicator is ***in the active communication mode***, the controller 107 (FIG. 2) will cause ***the signal generator 109 (FIG. 2) and driver 111a*** to ***drive the antenna circuit 102 to initiate or generate an RF-H field***. The antenna circuit 102 is tuned to the required RF transmission frequency which, for an NFC communicator operating in accordance with ISO 18092, is 13.56 MHz (Megahertz)."

- **[0071]:** "The ***drive signal from the driver 111 a is coupled to the antenna coil 308*** via capacitors 302 and 303. The ***driver 111 a thus develops an RF voltage across transmission connections Tx1 and Tx2 which causes an RF current to*** flow between transmission connections Tx1 and Tx2 through antenna circuit 102. As this RF current flows between points 306 and 305, it ***divides between resistor 301, capacitor 304 and antenna element 309 in accordance with their relative impedances***. The portion of the RF current ***that flows through antenna element 309 passes through antenna coil 308 producing an RF H field***."

- **[0074]:** "Any appropriate form of modulation may be used to enable data communication, for example modulation of the RF H field may be

> achieved through gating or switching of the generated signal in accordance with the relevant communication protocols…. For example, a current drive will control the current supplied to the antenna circuit 102 and may achieve modulation by changing the current. A voltage drive on the other hand will control the voltage supplied to the antenna circuit 102 and may achieve modulation by controlling pulses supplied the antenna circuit 102."

91. See my discussion of the elements [1.pre]-[1.a] and [1.c] above (Sections IX.A.2.a, b, and d). Bangs further discloses "NFC communicator 100a" includes "transmitter circuitry compris[ing] components for driving the antenna circuit 102," which comprises "antenna element 309," "to transmit an RF signal" to the external NFC reader (*see* [1.c], Section IX.A.2.d). [0046], [0050], [0057], [0071]. Bangs further explains that the NFC communicator 100a communicates in an "active communication mode" where it uses its "own RF-H field to enable communication." [0004].

92. To effect active communication, the "transmitter circuitry" includes "signal generator 109 coupled via a driver 111 to the antenna circuit 102," which comprises antenna element 309. [0050], [0057], Fig. 2. Signal generator 109 and driver 111 "drive the antenna circuit 102," which comprises antenna element 309, "to initiate or generate an RF-H field" that is "modulat[ed]…in accordance with the data to be communicated." [0050], [0070], [0071], [0074]. Moreover, as I discussed in [1.a] (Section IX.A.2.b) above, Bangs discloses NFC communicator components, including the transmitter circuitry illustrated in Figure 2, are "coupl[ed] to derive

power from the corresponding device battery 11." [0041], Fig. 2.

f. Claim 2

93. **Claim 2 recites "The mobile device of claim 1, wherein the transmitted data includes ticketing information for a mass transit system."** This element is met by Bangs.

94. See my discussion of the elements of claim 1 above (Sections IX.A.2.a-e). Bangs discloses that **the transmitted data** (*e.g.,* "data to be communicated," *see* [1.d] (Section IX.A.2.e)) **includes ticketing information for a mass transit system** (*e.g.,* "bus tickets, train tickets")**.** *E.g.*, Bangs:

- **[0006]:** "When incorporated within a larger device or host, ***a near field RF communicator may be a discrete entity or may be provided by functionality within the larger device*** or host…. [E]xamples of such larger devices or host devices are…electronic devices, apparatus or systems. Some areas of application are payment systems, ***ticketing systems, for example in tickets (for example parking tickets, bus tickets, train tickets or entrance permits or tickets) or in ticket checking systems***, toys, games, posters, packaging, advertising material, product inventory checking systems and so on."
- **[0050]:** "***[T]he transmitter circuitry comprises components*** for driving the antenna circuit 102 to transmit an RF signal and ***for modulating an RF signal*** to enable communication of data between near field RF communicators in near field range. As shown in FIG. 2, the transmitter circuitry comprises a signal generator 109 coupled via a driver 111 to the antenna circuit 102. In this example, the signal generator 110 is configured to cause modulation by gating or switching on and off the RF signal ***in accordance with the data to be communicated***."

95. See my discussion of the element [1.d] above (Section IX.A.2.e). Bangs

further discloses in its background discussion that NFC communications enabled devices have various "areas of application," including "ticketing systems" for mass transit, *e.g.,* "bus tickets, train tickets." Bangs [0006]. As such, a person of ordinary skill in the art would have understood, and at minimum found it obvious, that Bangs' mobile telephone 1 is deployed in a mass transit "ticketing system" to advantageously allow commuters to purchase tickets without pulling a separate form of payment from their wallet or purse to ride mass transit. *See* [0006]. For example, because Bangs explains in its background discussion that NFC communicators generally are applicable to the purchase of tickets for mass transit systems, a person of ordinary skill in the art would have understood that the inventive NFC communicators support this advantageous functionality. In such an application, a person of ordinary skill in the art would have understood, and at least found it obvious, the "data to be communicated" (*see* [1.d] (Section IX.A.2.e)) to the NFC reader device includes mass transit ticketing information (such as information about a bus or train ticket) to advantageously allow the ticketing transaction to be performed. For example, U.S. Patent App. Pub. No. 2008/0194200 (filed on November 16, 2005) and W.O. Patent App. Pub. No. 2007/135434 (published on November 29, 2007) each describe using near field communicators for "ticketing systems" and in "ticket checking systems." Ex. 1033, [0101]; Ex. 1034, 3:5-23. As another example, Mayes & Markantonakis explain "The use of smart cards" storing

"credit card plus e-ticket" information "in Transport is becoming a growth area because it offers flexibility, fraud reduction, speed and simply because users like them." Ex. 1036, *17.

g. Claim 3

96. **Claim 3 recites "The mobile device of claim 1, wherein the transmitted data includes transaction information for a mobile payment."** This element is met by Bangs.

97. See my discussion of the elements of claim 1 above (Sections IX.A.2.a-e). Bangs discloses that **the transmitted data** (*e.g.*, "data to be communicated," *see* [1.d] (Section IX.A.2.e)) **includes transaction information for a mobile payment** (*e.g.,* is for "payment system[]" accessed via the "mobile phone")**.** *E.g.*, Bangs:

- **[0006]:** "When incorporated within a larger device or host, ***a near field RF communicator may be a discrete entity or may be provided by functionality within the larger device*** or host…. [E]xamples of such larger devices or host devices are…electronic devices, apparatus or systems. Some areas of application are ***payment systems***, ticketing systems, for example in tickets (for example parking tickets, bus tickets, train tickets or entrance permits or tickets) or in ticket checking systems, toys, games, posters, packaging, advertising material, product inventory checking systems and so on."
- **[0050]:** "In this example, the transmitter circuitry comprises components for driving the antenna circuit 102 to transmit an RF signal and for modulating an RF signal to enable communication of data between near field RF communicators in near field range. As shown in FIG. 2, the transmitter circuitry comprises a signal generator 109 coupled via a driver 111 to the antenna circuit 102. In this example, the signal generator 110 is configured to cause modulation by gating or switching

on and off the RF signal ***in accordance with the data to be communicated***…"

98. See my discussion of the elements [1.pre] and [1.d] above (Sections IX.A.2.a and IX.A.2.e). Bangs further discloses in its background discussion that another "area[] of application" for its NFC communications enabled mobile telephone is "payment systems." [0006]. A person of ordinary skill in the art would have understood, and at minimum found it obvious, that the "data to be communicated" (*see* [1.d] (Section IX.A.2.e)) to the reader device in a mobile payment environment includes transaction information for a mobile payment to advantageously allow the device to make a payment as part of the transaction. For example, because Bangs explains in its background discussion that NFC communicators generally are applicable to payments systems, a person of ordinary skill in the art would have understood that the inventive mobile phones including NFC communicators support this advantageous functionality. *See* [0006]. As another example, Mayes & Markantonakis describe "smart cards" as "the obvious…technology" for banking and identify "customer, account, and bank details" as the information used to complete payment transactions. Ex. 1036, *117, *120.

h. Claim 4

99. **Claim 4 recites "The mobile device of claim 1, wherein the NFC reader is a point-of-sale NFC reader."** This element is met by Bangs.

100. See my discussion of the elements of claim 1 above (Sections IX.A.2.a-e). Bangs further discloses that **the NFC reader** (*e.g.,* "NFC communications" "reader[]," *see* [1.c] (Section IX.A.2.d)) **is a point-of-sale NFC reader** (*e.g.,* used for "payment systems," *see* [3] (Section IX.A.2.g))**.** *E.g.*, Bangs:

- **[0006]:** "When incorporated within a larger device or host, ***a near field RF communicator may be a discrete entity or may be provided by functionality within the larger device*** or host…. [E]xamples of such larger devices or host devices are…electronic devices, apparatus or systems. Some areas of application are ***payment systems***, ticketing systems, for example in tickets (for example parking tickets, bus tickets, train tickets or entrance permits or tickets) or in ticket checking systems, toys, games, posters, packaging, advertising material, product inventory checking systems and so on."

101. See my discussion of the element [1.c] and claim 3 above (Sections IX.A.2.d and g). As discussed in [1.c] (Section IX.A.2.d), Bangs discloses an NFC reader. And as I discussed in [3] (Section IX.A.2.g) above, Bangs discloses "payment systems" are an area of application for NFC communication. [0006]. A person of ordinary skill in the art would have understood, and at minimum found it obvious, that Bangs' NFC communicator is used with a point-of-sale reader device to advantageously implement a contactless payment system. For example, Fisher

explains NFC devices communicate with "a point-of-sale terminal" to "complet[e] a transaction." Fisher [0009]–[0010], [0013]. Fisher further states NFC devices are "usable with NFC readers," thus recognizing that NFC devices interact with NFC point-of-sale readers to complete transactions. Fisher [0007]. *See also* Ex. 1015, 467 (describing using "NFC devices" as "point of sales in banks, restaurants, gas stations, stadiums, public transport, etc."); Ex. 1036, *373 (describing the use of smartcards with "point of sale systems")

i. Claim 5

102. **Claim 5 recites "The mobile device of claim 1, wherein the antenna includes an inductive element."** This element is met by Bangs.

103. See my discussion of the elements of claim 1 above (Sections IX.A.2.a-e). Bangs discloses that **the antenna includes an inductive element** (*e.g.,* "antenna element 309" includes "antenna coil element 308"; "inductor")**.** *E.g.*, Bangs:

- **Fig. 3:**

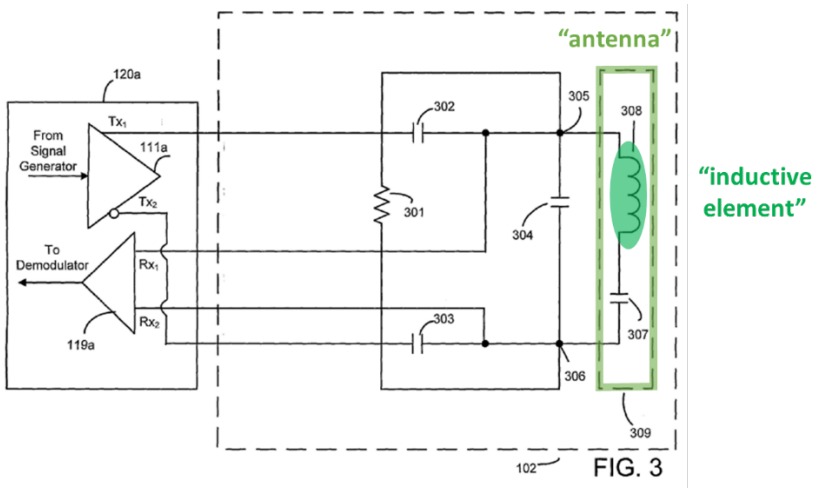

- **[0039]:** "Each NFC communicator 15 and 30 also comprises an ***antenna circuit*** 17 and 32 ***comprising an inductor or coil*** in the form of an antenna 18 and 33. The antenna circuits 17 and 32 ***enable*** an alternating magnetic field (RF H field) generated by ***the antenna of one near field RF communicator*** 15 (or 30) by transmission of an RF signal (for example a 13.56 Mega Hertz signal) ***to be inductively coupled to the antenna of the other near field RF communicator*** 30 (or 15) when that antenna is within the near field of the RF signal generated by the one near field RF communicator 15 (or 30)."

- **[0057]:** "As shown in FIG. 3, ***antenna circuit 102 comprises an antenna element 309*** coupled in parallel with a first capacitor 304 to form a tank circuit (a parallel LC resonant circuit)."

- **[0058]:** "***The antenna element 309 comprises an antenna coil element 308*** in series with a second capacitor 307 which second capacitor 307 is anti-phase to the antenna coil element 308 and affects a voltage resulting from inductive coupling of an RF H field to the antenna circuit. As shown the antenna coil element 308 comprises a single antenna coil which may comprise one, two or more coils or loops."

- **[0068]:** "When the NFC communicator antenna circuit 102 is within an RF H field…the inherent inductive impedance of the coil 308 results in the current induced in the antenna coil 308 generating a voltage across the coil while the capacitive impedance of the capacitor 307 results in the current induced in the antenna coil 308 generating a voltage that is in anti-phase to that generated across the coil 308. The voltage seen by the rest of the antenna circuit and, as a result, the NFC communicator functionality 120a is a combination of the voltage generated across the antenna coil 308 and the anti-phase voltage generated across the capacitor 307. Accordingly, the presence of the capacitor 307 controls the voltage to which the rest of the antenna circuit (and as a result the NFC communicator functionality 120a) is subjected."

104. See my discussion of the element [1.c] above (Section IX.A.2.d). Bangs further discloses the "antenna element 309 comprises…antenna coil element 308." [0057], Fig. 3. Antenna coil 308 is an "inductor" to enable inductive coupling with an antenna of another NFC communicator. [0039], [0057]–[0058], Figure 3. When

the antenna element 309 is near another NFC communicator's RF-H field, the "inductive impedance" of the antenna element 309 generates a current across coil element 308. [0068].

j. Claim 6

105. **Claim 6 recites "The mobile device of claim 1, wherein the active transmit driver circuit includes one or more of an amplifier[,][1] filter, oscillator, and/or modulator."** This element is met by Bangs.

106. See my discussion of the elements of claim 1 above (Sections IX.A.2.a-e). Bangs further discloses that **the active transmit driver circuit** (*e.g.,* "transmitter circuitry" for "active communication" "compris[ing] a signal generator 109 coupled" to "driver 111"; *see* [1.d] (Section IX.A.2.e)) **includes one or more of an amplifier[,] filter, oscillator, and/or modulator** (*e.g.,* "signal generator 109" "generate[s]…signal" and "is configured to cause modulation")**.** *E.g.*, Bangs:

- **[0050]:** "As shown in FIG. 2, ***the transmitter circuitry comprises a signal generator 109*** coupled via a driver 111 to the antenna circuit 102. In this example, the signal generator 110 is ***configured to cause modulation*** by gating or switching on and off the RF signal in accordance with the data to be communicated. The ***NFC communicator***

[1] The phrase "amplifier filter" appears to be a typo and the two words should be separated by a comma. As the '053 states, "active transmit driver circuit 2130 may include one or more amplifiers, filters, oscillators, modulators, etc., to form a signal that mimics the sidebands 1610 (FIG. 16)." '053 patent, 17:33-36.

may use any appropriate modulation scheme that is in accordance with the standards and/or protocols under which the NFC communicator operates. Alternatively a separate or further signal controller may be incorporated within the NFC operational components of functionality 120 to control modulation of the signal generated by the signal generator 109 in accordance with data or instructions received from the controller 107."

- **[0070]:** "When the ***NFC communicator is in the active communication mode***, the controller 107 (FIG. 2) will cause the ***signal generator 109*** (FIG. 2) and driver 111 a to drive the antenna circuit 102 to ***initiate or generate an RF-H field***. The antenna circuit 102 is tuned to the required RF transmission frequency which, for an NFC communicator operating in accordance with ISO 18092, is 13.56 MHz (Megahertz). The capacitors 302 and 303 add capacitance to bring the tuning closer to the required frequency."

107. See my discussion of the element [1.d] above (IX.A.2.e). As I discussed above in [1.d], Bangs further discloses "a signal generator 109," that is "configured to cause modulation" of the "generated…signal" to communicate desired data, and is thus a modulator. Bangs [0050].

108. Moreover, a person of ordinary skill in the art would have understood, and at a minimum found it obvious, that signal generator 109 further includes an amplifier, filter, and oscillator to advantageously "generate[]" an RF carrier waveform with a desired frequency bandwidth (centered around 13.56 MHz) at the appropriate strength. *See* Bangs [0050]. For example, U.S. Patent No. 6,026,125 (published on February 15, 2000) describes an RF source signal with "a low-level impulse-gated oscillator," a "bandpass filter," and "a gated power amplifier." Ex. 1024, 3:12–30. The oscillator generates the basic carrier waveform around a desired

frequency, the filter removes unwanted frequencies from the waveform, and the amplifier amplifies the waveform to the desired power output. As another example, U.S. Patent App. Pub. No. 2009/0227882 (filed on March 6, 2007) discusses how "an oscillator" and "gated amplifier" are used to "create a pulsed radiofrequency (RF) waveform." Ex. 1025, [0067]. Thus, the three components work together to form a spectrally-clean carrier waveform at the appropriate strength. This waveform is what is modulated with transmit data, *i.e.,* "switch[ed] on an off in accordance with data to be communicated." Bangs [0050].

k. Claim 7

109. **Claim 7 recites "The mobile device of claim 1 comprising an amplifier coupled to the power source to receive the power, wherein the amplifier is further coupled to the antenna."** This element is met by Bangs.

110. See my discussion of the elements of claim 1 above (Sections IX.A.2.a-e). Bangs discloses **an amplifier coupled to the power source to receive the power** (*e.g.,* "amplifier 119" "coupl[ed] to derive power from…device battery 11"), **wherein the amplifier is further coupled to the antenna** (*e.g.,* "antenna element 309…coupled to" "amplifier 119")**.** *E.g.*, Bangs:

- **Figs. 2–3:**

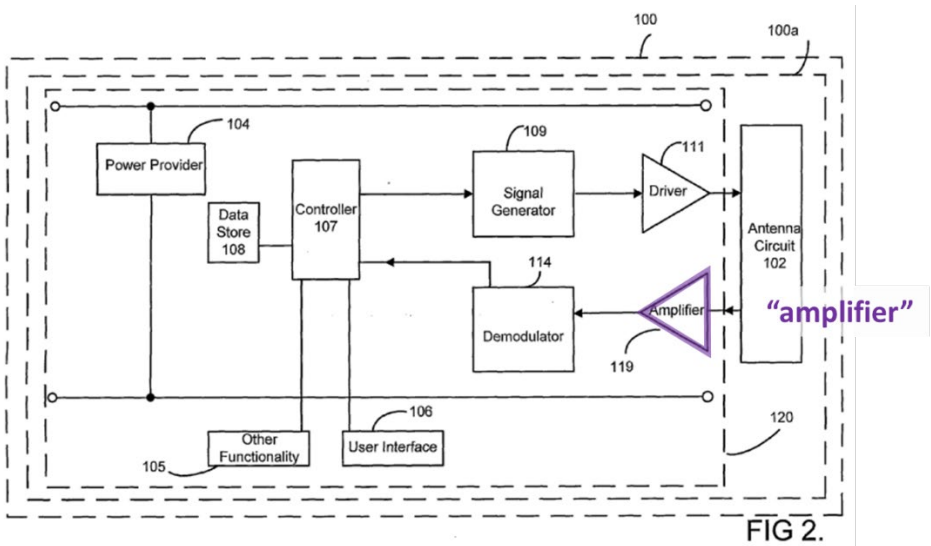

FIG 2.

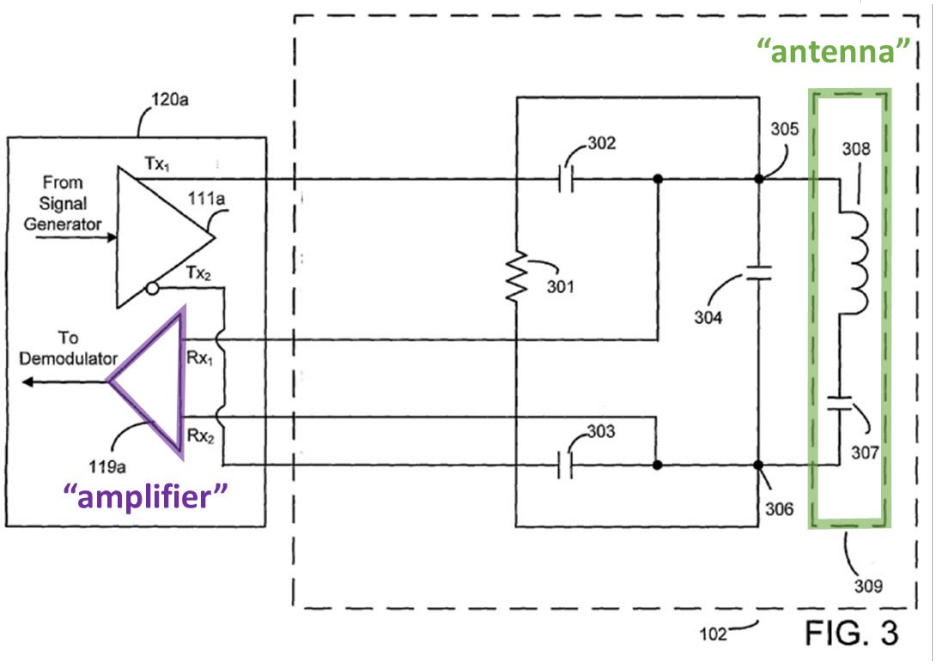

FIG. 3

- **[0041]:** "Each NFC communicator 15 and 30 also ***comprises a power provider*** 19 and 34. The power providers 19 and 34 may be power supplies within the host device or specific to the NFC communicators 15 and 30, for example a button cell battery, or other small battery. As another possibility or additionally as shown by dashed lines in FIG. 1, one or both of the power providers 19 and 34 may simply comprise a ***coupling to derive power from the corresponding device battery 11*** or 25."

- **[0049]:** "In this example, ***the receiver circuitry comprises an amplifier 119 coupled to the antenna circuit 102*** and a demodulator 114 coupled to the amplifier 119 and the controller 107 ***for amplifying*** and

demodulating ***a modulated RF signal*** inductively coupled to the antenna circuit 102 ***from another near field RF communicator*** in near field range and for supplying the thus-extracted data to the controller 107 for processing."

- **[0057]:** "As shown in FIG. 3, ***antenna circuit 102 comprises an antenna element 309*** coupled in parallel with a first capacitor 304 to form a tank circuit (a parallel LC resonant circuit)."

- **[0059]:** "The junction 305 between capacitor 304 and ***antenna element 309 is coupled to one input Rx1 of a differential amplifier 119a forming the amplifier 119*** shown in FIG. 2 while the junction 306 between capacitor 304 and ***antenna element 309 is coupled to the other input Rx2 of the differential amplifier 119a***…."

111. See my discussion of the elements [1.a] and [1.c] above (Sections IX.A.2.b and d). Bangs further discloses NFC communicator 100a includes "amplifier 119" "coupled to…antenna circuit 102" comprising antenna element 309. [0049], [0057], [0059], Fig. 3. Antenna element 309 "is coupled to" "input[s]…of a differential amplifier 119a forming…amplifier 119." [0059]. As discussed in [1.a] (Section IX.A.2.b), Bangs discloses the NFC communicator 100a components, including amplifier 119, are "coupl[ed] to derive power from the corresponding device battery 11." [0041], Fig. 2.

l. Claim 8

112. **Claim 8 recites "The mobile device of claim 7, wherein the amplifier amplifies a signal received at the antenna and generates an amplified signal, and provides the amplified signal to the smartcard controller."** This element is met by Bangs.

113. See my discussion of the elements of claim 7 above (Section IX.A.2.l). Bangs discloses **the amplifier amplifies a signal received at the antenna** (*e.g.,* "amplifier 119…for amplifying" "a modulated RF signal" from "antenna element 309") **and generates an amplified signal** (*e.g.,* generates "amplif[ied]…modulated RF signal")**, and provides the amplified signal to the smartcard controller** (*e.g.,* provides the "amplif[ied]…signal" to "controller 107")**.** *E.g.*, Bangs:

- **Figs. 2–3:**

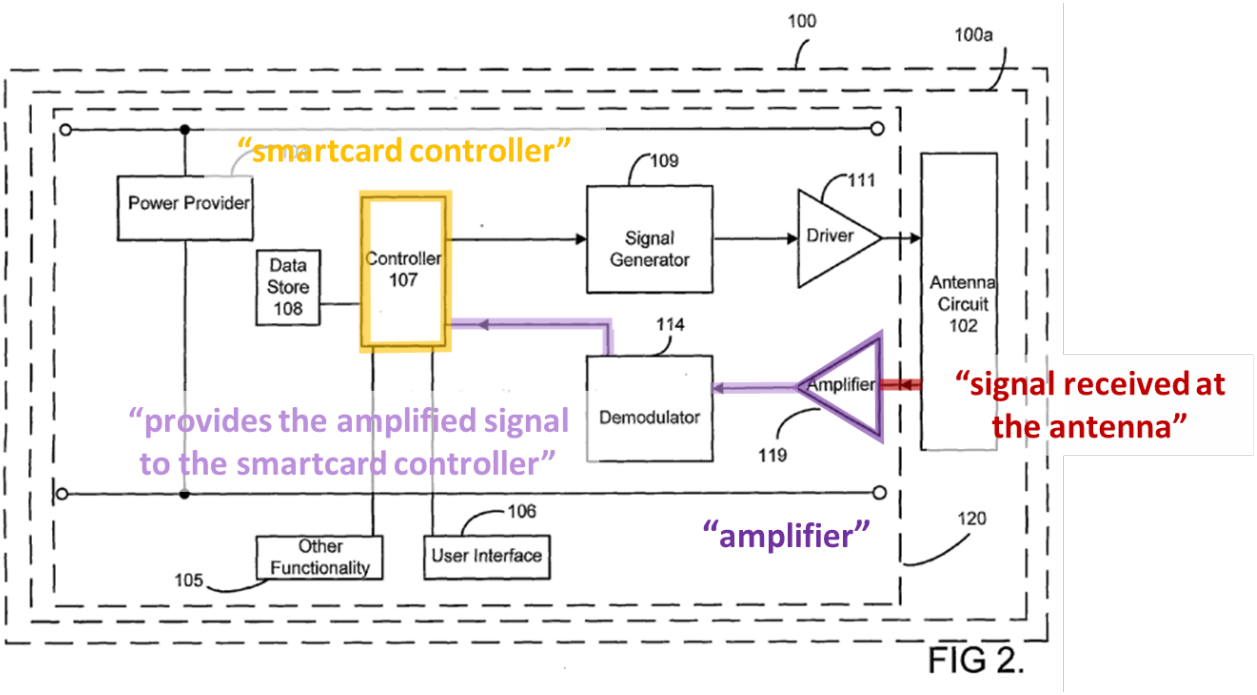

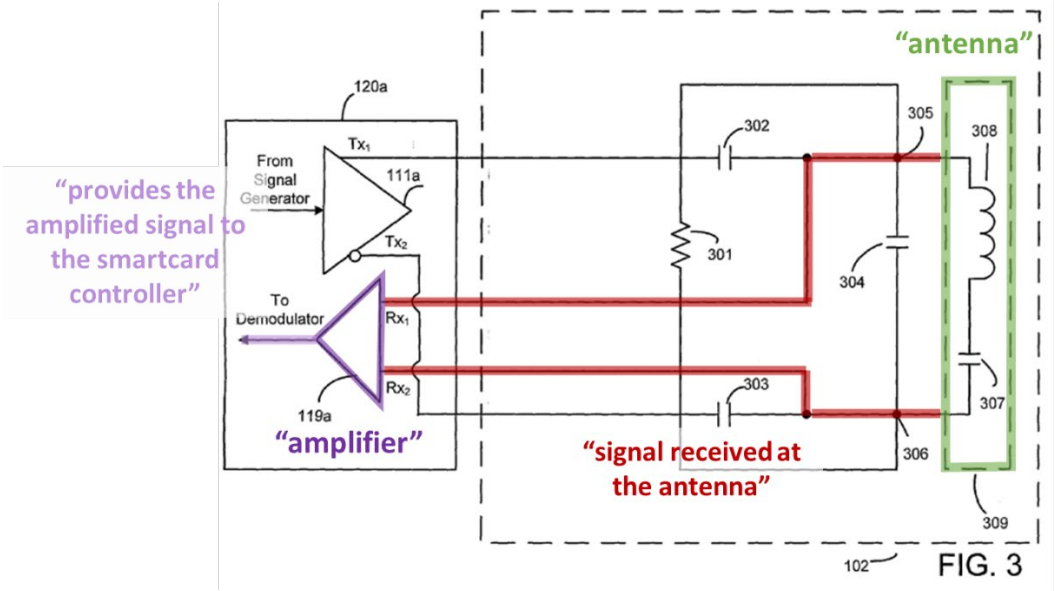

- **[0001]:** "***This invention relates to*** NFC (Near Field Communication) communicators and ***antenna circuits for NFC communicators***."

- **[0028]–[0032]:** "***FIG. 2 shows*** a functional block diagram of ***an example of an NFC communicator*** or NFC communications enabled device.
  FIG. 3 shows a functional circuit diagram of an NFC communicator to illustrate ***one example of an antenna circuit embodying the present invention***;
  FIG. 4 shows a functional circuit diagram of an NFC communicator to illustrate ***another example of an antenna circuit embodying the present invention***;
  FIG. 5 shows a functional circuit diagram of an NFC communicator to illustrate ***another example of an antenna circuit embodying the present invention***; and
  FIG. 6 shows a functional circuit diagram of an NFC communicator to illustrate ***another example of an antenna circuit embodying the present invention***."

- **[0045]:** "***FIG. 2*** shows a functional block diagram of an NFC communications enabled device 100 in accordance with the invention to illustrate in greater ***detail one way in which the NFC operational components of an NFC communications enabled device embodying the invention may be implemented***."

- **[0049]:** "[T]he receiver circuitry comprises an ***amplifier 119*** coupled to the antenna circuit 102 and a demodulator 114 coupled to the amplifier

119 and the controller 107 ***for amplifying*** and demodulating ***a modulated RF signal inductively coupled to the antenna circuit 102 from another near field RF communicator*** in near field range ***and*** for ***supplying the thus-extracted data to the controller 107*** for processing."

- **[0059]:** "The junction 305 between capacitor 304 and ***antenna element 309 is coupled to one input Rx1 of a differential amplifier 119 a forming the amplifier 119*** shown in FIG. 2 while the junction 306 between capacitor 304 and ***antenna element 309 is coupled to the other input Rx2 of the differential amplifier 119 a***…."

- **[0064]:** "Generally, ***the NFC functionality 120 a will be formed as one or more integrated circuits (generally monocrystalline silicon integrated circuits) mounted on a Printed Circuit Board(s) (PCB(s)) or the like and the antenna circuit will be formed by external discrete components formed on or carried by (e.g. surface mounted on) a PCB***, for example the antenna coil element may be defined by conductive tracks on a PCB while any capacitors and resistors of the antenna circuit may be provided by discrete components mounted to the PCB."

- **[0100]:** "The above embodiments are to be understood as illustrative examples of the invention. Further embodiments of the invention are envisaged. It is to be understood that any feature described in relation to any one embodiment may be used alone, or in combination with other features described, and may also be used in combination with one or more features of any other of the embodiments, or any combination of any other of the embodiments. Furthermore, ***equivalents and modifications not described above may also be employed without departing from the scope of the invention***, which is defined in the accompanying claims."

114. See my discussion of the elements [1.b] and [1.c] above (Sections IX.A.2.c and IX.A.2.d). Bangs further discloses amplifier 119 "amplif[ies]…a modulated RF signal" received from "antenna element 309" and the amplified signal is provided to "demodulator 114 coupled to…controller 107" (*see* [1.b] (Section IX.A.2.c)). [0049], [0059], Figs. 2–3. Demodulator 114 demodulates the amplified

signal to extract data from the signal and "suppl[ies] the thus-extracted data to…controller 107" for further processing. [0049]. Indeed, during prosecution of the related '722 patent (see my discussion in Section V.B.2), the Examiner found that Park's (Ex. 1017) disclosure of "demodulating the signal amplified by the amplifier 444 to generate the reader reception data and outputting the reader reception data to the controller 130" (Ex. 1017, ¶52) satisfied "provid[ing] the amplified signal to the smartcard controller" recited in the pending claims. Ex. 1011 at 1695. The Applicant did not dispute this characterization of providing an amplified signal to the smartcard controller. Ex. 1011 at 1716. Park's disclosure of demodulating an amplified signal before providing it to a controller parallels Bangs' disclosure and thus, Bangs discloses this limitation.

115. To the extent it is argued that the amplified signal must be supplied directly to the controller, demodulator 114 coupled to controller 107 collectively satisfy this requirement.

116. And to the extent it is argued that the demodulator must be internal to controller 107, this also would have been obvious as doing so would amount to nothing more than reorganizing familiar elements according to known methods to yield predictable results. There is no functional difference between demodulating before or as part of controller 107. In the first case, the signal from the amplifier is demodulated at the demodulator, and the resulting data is provided to the controller

107, as explicitly described in Bangs. [0049]. In the second case, the signal from the amplifier is provided to the controller and first enters the demodulator to be demodulated, and then resulting data is provided at the next stage of the controller, and subsequent processing is identical to how it is performed in the first case explicitly described in Bangs. And providing demodulation within a controller was known in the art. For example, U.S. Patent App. Pub. No. 2007/0035396 (published February 15, 2007) discloses an "RFID component" "controller" that includes "demodulation…of [the] data streams into the controller." Ex. 1021, [0007]–[0009]. As another example, U.S. Patent App. Pub. No. 2008/0163361 (filed on July 16, 2007) discloses a "controller 308" of an RFID device "is capable of properly modulating/demodulating data…received from external devices." Ex. 1022, [0043].

117. Moreover, Bangs discloses that "equivalents and modifications not described above may also be employed without departing from the scope of the invention." Bangs [0100]. As described above, placing the demodulator immediately before the input to the controller 107 is the same as placing the demodulator inside the controller 107 for these purposes.

m. Element [17.pre]

118. **Element [17.pre] recites "A method of near field communication between a mobile device and an NFC reader, the method comprising."** This element is met by Bangs.

119. To the extent the preamble is limiting, Bangs discloses **a method of near field communication** (*e.g.,* "Near field RF communication") **between a mobile device and an NFC reader** (*e.g.,* between "mobile telephone 1" and "NFC "reader[]" device). *E.g.*, Bangs:

120. See my discussion of the elements [1.pre], [1.c] and [1.d] above (Sections IX.A.2.a, d, and e). As I explain above in [1.c] and [1.d], Bangs discloses operations in mobile telephone 1 for NFC with an NFC reader.

n. Element [17.a]

121. **Element [17.a] recites "coupling a smartcard controller and an active transmit driver circuit to a power source of the mobile device."** This element is met by Bangs.

122. Bangs discloses **coupling a smartcard controller** (*e.g.,* "controller 107," *see* [1.b] (Section IX.A.2.d)) **and an active transmit driver circuit** (*e.g.,* "transmitter circuitry" for "active communication" "comprises a signal generator 109 coupled" to "driver 111," *see* [1.d] IX.A.2.e) **to a power source of the mobile device** (*e.g.,* "coupl[ed] to...device battery 11" of the "mobile telephone," *see* [1.a] (Section IX.A.2.b))**.** *E.g.*, Bangs:

123. See my discussion of the elements [1.pre]-[1.b], [1.d], and [17.pre] above (Sections IX.A.2.a, b, c, e, and m).

o. Element [17.b]

124. **Element [17.b] recites "providing power to the smartcard controller and the active transmit driver circuit from the power source of the mobile device."** This element is met by Bangs.

125. Bangs discloses **providing power to the smartcard controller** (*e.g.,* "controller 107," *see* [1.b] (Section IX.A.2.c)) **and the active transmit driver circuit** (*e.g.,* "transmitter circuitry" for "active communication" "comprises a signal generator 109 coupled" to "driver 111," *see* [1.d] (Section IX.A.2.e)) **from the power source of the mobile device** (*e.g.,* "derive power from the corresponding device battery 11" of the "mobile telephone," *see* [1.a]–[1.b], [1.d] (Sections IX.A.2.b, c, and e)). *E.g.*, Bangs:

- **Fig. 2:**

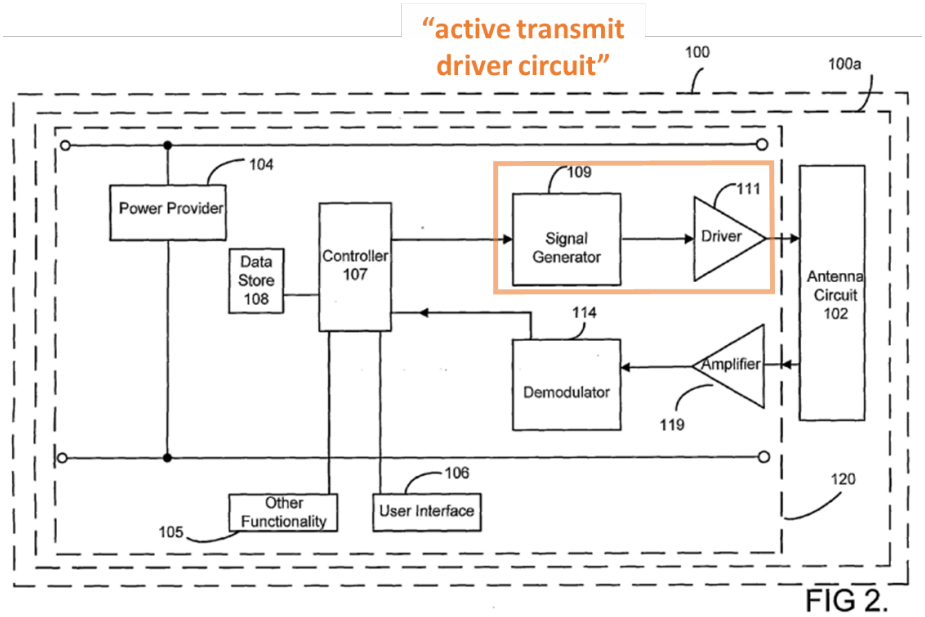

- **[0041]:** "***Each NFC communicator*** 15 and 30 also ***comprises a power provider*** 19 and 34. ***The power providers*** 19 and 34 ***may be power supplies***

within the host device…. As another possibility or additionally as shown by dashed lines in FIG. 1, one or both of ***the power providers*** 19 and 34 ***may simply comprise a coupling to derive power from the corresponding device battery 11*** or 25."

- **[0047]:** "…In the interests of simplicity, ***power supply couplings from the power provider 104 to other components*** are not shown ***in FIG. 2***."

126. See my discussion of the elements [1.pre]-[1.b], [1.d], and [17.pre] above (Sections IX.A.2.a, b, c, e, and m). As I explained in [1.b] (Section IX.A.2.c) above, Bangs further discloses the "power provider" supplies NFC communicator components with power "derive[d]…from the corresponding battery 11" of the mobile telephone. Bangs [0041], [0047], Fig. 2.

p. Element [17.c]

127. **Element [17.c] recites "coupling the active transmit driver circuit to an antenna of the mobile device, wherein the antenna is tuned to operate at substantially 13.56 MHz."** This element is met by Bangs.

128. Bangs discloses **coupling the active transmit driver circuit to an antenna of the mobile device** (*e.g.,* "transmitter circuitry" for "active communication" "coupled…to the antenna circuit 102" comprising antenna element 309 of "mobile telephone")**, wherein the antenna is tuned to operate at substantially 13.56 MHz** (*e.g.,* "antenna element 309" in "antenna circuit…tuned to" "13.56 MHz"; *see* [1.c] (Section IX.A.2.d))**.** *E.g.*, Bangs:

- **Figs. 2–3:**

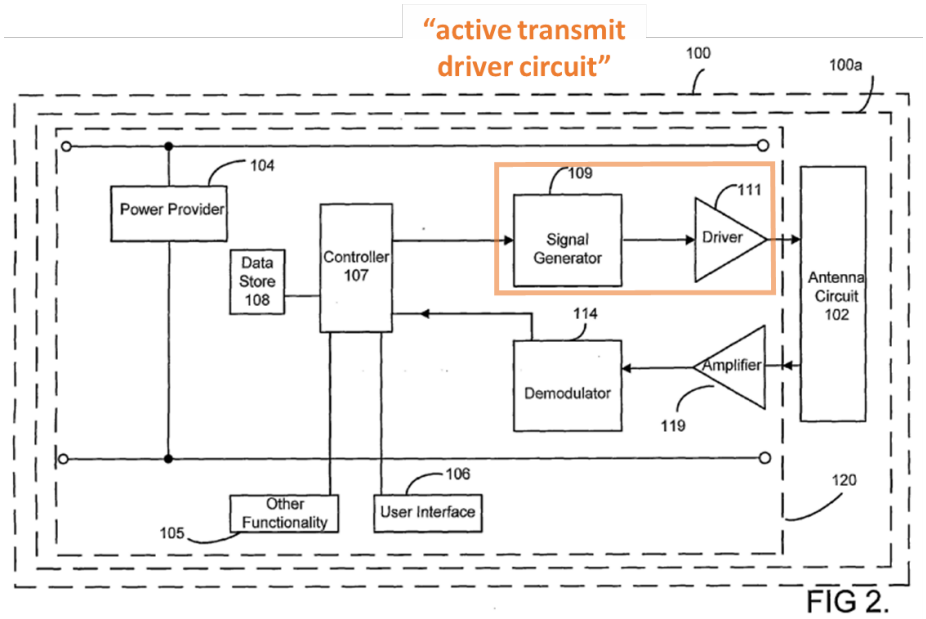

FIG 2.

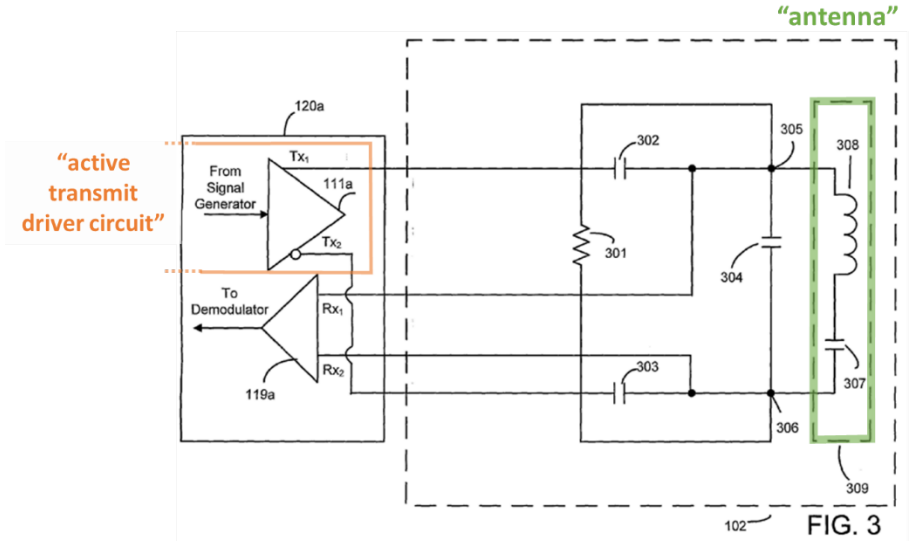

FIG. 3

- **[0050]:** "In this example, the transmitter circuitry comprises components for driving the antenna circuit 102 to transmit an RF signal and for modulating an RF signal to enable communication of data between near field RF communicators in near field range. As shown in FIG. 2, ***the transmitter circuitry comprises a signal generator 109 coupled via a driver 111 to the antenna circuit 102***. In this example, the signal generator 110 is configured to cause modulation by gating or switching on and off the RF signal in accordance with the data to be communicated."

- **[0057]:** "As shown in FIG. 3, ***antenna circuit 102 comprises an antenna element 309*** coupled in parallel with a first capacitor 304 to form a tank circuit (a parallel LC resonant circuit)."

- **[0070]:** "When the NFC communicator is in ***the active communication mode***, the controller 107 (FIG. 2) will cause the ***signal generator 109 (FIG. 2) and driver 111 a to drive the antenna circuit 102*** to initiate or generate an RF-H field. The antenna circuit 102 is tuned to the required RF transmission frequency which, for an NFC communicator operating in accordance with ISO 18092, is 13.56 MHz (Megahertz). The capacitors 302 and 303 add capacitance to bring the tuning closer to the required frequency."

129. See my discussion of the elements [1.pre], [1.c]-[1.d], [17.pre]-[17.b] above (Sections IX.A.2.a, d-e, and m-o). Bangs further discloses the "transmitter circuitry" to effect "active communication" is "coupled…to the antenna circuit 102" comprising "antenna element 309." Bangs [0050], [0057], [0070]. *See* my discussion of [1.d] (Section IX.A.2.e).

q. Element [17.d]

130. **Element [17.d] recites "driving transmission of data by the active transmit driver circuit from the antenna to the NFC reader."** This element is met by Bangs.

131. Bangs discloses **driving transmission of data by the active transmit driver circuit from the antenna** (*e.g.,* "driver 111" of "transmitter circuitry" for "active communication" "driving the antenna circuit" comprising "antenna element 309" to "generate an RF-H field" for "transmission" of "data to be communicated") **to the NFC reader** (*e.g.,* to "NFC communications" "reader[]," *see* [1.d] (Section

IX.A.2.e)**.** *E.g.*, Bangs:

- **[0050]:** "[T]he transmitter circuitry comprises components for ***driving the antenna circuit 102 to transmit an RF signal*** and for modulating an RF signal ***to enable communication of data between near field RF communicators in near field range***. As shown in FIG. 2, the transmitter circuitry comprises a signal generator 109 coupled via a driver 111 to the antenna circuit 102…."

- **[0057]:** "As shown in FIG. 3, ***antenna circuit 102 comprises an antenna element 309*** coupled in parallel with a first capacitor 304 to form a tank circuit (a parallel LC resonant circuit)."

- **[0070]:** "When the NFC communicator is in the active communication mode, the controller 107 (FIG. 2) will cause ***the signal generator 109 (FIG. 2) and driver 111a*** to ***drive the antenna circuit 102 to initiate or generate an RF-H field***. The antenna circuit 102 is tuned to the required RF transmission frequency which, for an NFC communicator operating in accordance with ISO 18092, is 13.56 MHz (Megahertz). The capacitors 302 and 303 add capacitance to bring the tuning closer to the required frequency."

132. See my discussion of the elements [1.c]-[1.d] and [17.pre]-[17.c] above (Sections IX.A.2.d-e, m-p). As I discussed in [1.d] (Section IX.A.2.e), Bangs further discloses "driver 111" drives "the antenna circuit 102 to transmit an RF signal" (which includes "data to be communicated") to another NFC communicator. Bangs [0050]. The other NFC communicator is "an RFID reader" device. *See* [1.c] (Section IX.A.2.d).

r. Claim 18

133. **Claim 18 recites "The method of claim 17 further comprising: amplifying a signal received from the antenna to generate an amplified signal; and providing the amplified signal to the smartcard controller."** This element is

met by Bangs.

134. See my discussion of claims 8 and 17 above (Sections IX.A.2.l and m-q).

s. Claim 19

135. **Claim 19 recites "The method of claim 10 or 17, wherein the transmitted data includes ticketing information for a mass transit system."** This element is met by Bangs.

136. See my discussion of claims 2 and 17 above (Sections IX.A.2.f and m-q).

t. Claim 20

137. **Claim 20 recites "The method of claim 10 or 17, wherein the transmitted data includes transaction information for a mobile payment."** This element is met by Bangs.

138. See my discussion of claims 3 and 17 above (Sections IX.A.2.g and m-q).

B. GROUND 2: BANGS IN VIEW OF KERDRAON RENDERS OBVIOUS CLAIMS 1–8 AND 17–20

139. To the extent it is argued that further disclosure of a smartcard controller is required, Kerdraon discloses **a smartcard controller** (*e.g.,* "smart card controller") as recited in each claim. Moreover, to the extent it is argued further disclosure of a "Near Field Communication (NFC) reader" is required, Kerdraon

discloses **interaction with a Near Field Communication (NFC) reader** (*e.g.,* "mobile terminal 21" communicates with "external reader" using "near-field communication") as recited in [1.c]-[1.d], [17.pre], [17.d]. [0078].

140. Kerdraon discloses "mobile terminal 21 including…a near-field communication (NFC) module 29," "antenna 31," and "**a Smart MX card component 33**," which "is a **smart card controller**" that controls NFC module 29. [0070]–[0071], [0077]–[0078], Fig. 4. For example, **Smart MX smartcard controller 33** processes data, received via antenna 31, from a reader device and directs NFC module 29 to transmit smartcard data retrieved from "Java Card applications…stored in the **Smart MX card component 33**" to provide to the reader. *See* [0073]. Near-field communication module 29 "enables near-field communication via the antenna 31 between the mobile terminal 21 and an external reader." [0078].

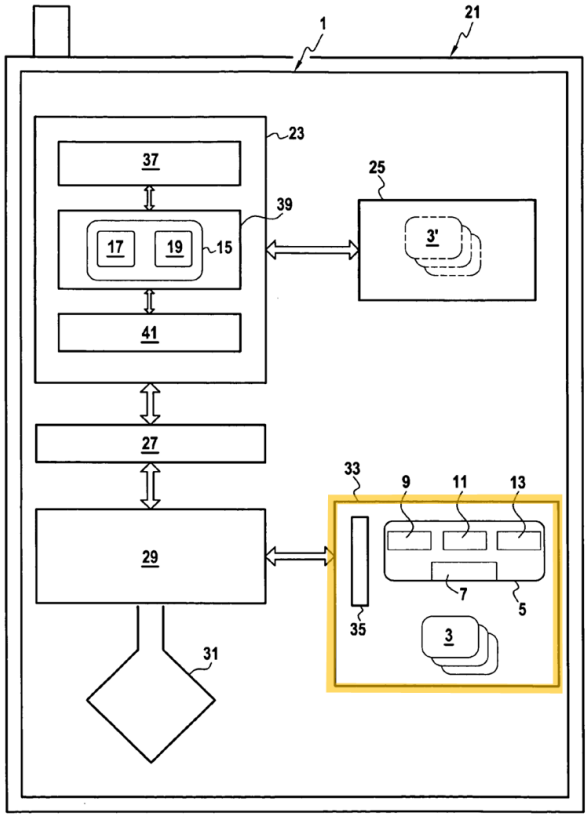

FIG.4

Kerdraon, [0069], Fig. 4.

141. **Smart MX smartcard controller 33** implements a smartcard operating system "such as Java Open Platform" to "store[] Java Card applications," "partner applications," "and the relevant data" for the applications. [0071], [0073]. For example, a smartcard application may offer a "payment service." [0067]. **Smart MX smartcard controller 33** is further compatible with "ISO 14443…interfaces."

[0071].[2]

142. To effect certain services provided by smartcard capabilities, Kerdraon's mobile terminal 21 interacts with an "external reader" device over "near-field communication" using "near-field communication module 29." Kerdraon [0078]. For example, a "payment service" cardlet is "linked to another application or…system" provided in "a local external reader" that activates the payment service cardlet to complete a payment. [0067].

143. Bangs and Kerdraon are analogous art, because they are in the same field as the '053 patent, which includes contactless communications devices, and are reasonably pertinent to the alleged problems addressed by the '053 patent, including incorporating contactless communication and smartcard functionality into a mobile device. *See, e.g.*, '053 patent, 1:40–44, 2:30–3:15, 11:61–67, Figs. 14–15, 17, 19, 21–36, 39; Bangs [0001], [0006], [0010], [0016], [0036]–[0038], [0043], [0052]; Kerdraon, [0001]-[0006], [0046], [0069]-[0071], [0078].

144. For example, the '053 patent "relates generally to contactless

---

[2] This is consistent with the '053 patent's disclosure of "smartcard controller." '053 patent, 9:21-38 ("The 'SmartMX' family of controllers available from NXP Semiconductors N.V. of The Netherlands are examples of suitable dual interface smartcard controllers.").

communications devices, and more specifically to contactless smartcard devices." '053, 1:41-43. Additionally, the '053 patent addresses the problem of incorporating contactless communication and smartcard functionality into a mobile device. *See, e.g.,* '053 patent, 2:30-3:9 (discussing "prior art smartcard controller" systems, such as "the 'SmartMX' controllers sold by NXP Semiconductors N.V. of Eindhoven, The Netherlands" in the context of prior art systems that implemented contactless RFID tag functionality in in mobile devices), 11:61-67, ("allow[ing] smartcard controller functions to be accessed by any host"), Figs. 14-15, 17, 19, 21-36, 39.

145. Like the '053 patent, Bangs and Kerdraon are also directed to contactless communications devices, such as NFC-enabled devices. *See, e.g.,* Bangs, [0001] ("This invention relates to NFC (Near Field Communication) communicators…"), [0005] ("[N]ear field RF communicators are defined in various standards for example…ISO/IEC 14443."), [0036]–[0038] ("[M]obile telephone 1 has…an NFC communicator 15."), [0052] ("NFC communicator 100*a*" operates "in accordance with the protocols set out in various standards" for contactless communication, such as "ISO/IEC 14443"), cl. 44 ("NFC communicator" is "arranged to communicate using any of" various contactless communication standards, such as "ISO/IEC 14443").

146. Kerdraon discusses contactless communications devices, such as NFC-enabled devices. Kerdraon, [0046] ("More particularly, the centralized applications

manager 15 includes…dialogue with a SIM card…to manage contactless communication."), [0069]–[0071] (discussing a "Java mobile terminal 21" that includes a "near-field communication (NFC) module," "antenna 31," and "a Smart MX component 33" that "has ISO 14443 or ISO 7816 interfaces" to perform contactless communication), [0078] ("near-field communication module 29 enables near-field communication via the antennas 31 between the mobile terminal 21 and an external reader or an RFID (radio frequency identification) tag.").

147. Additionally, Bangs and Kerdraon are pertinent to the alleged problems addressed by the '053, including incorporating contactless communication functionality, including smartcard functionality, into a mobile device. *See, e.g.,* Bangs, [0005] ("[N]ear field RF communicators are defined in various standards for example…ISO/IEC 14443."), [0006] (incorporating NFC communicators into "a larger device or host," such as "mobile telephones"), [0010] ("where the NFC communicator is within a host device, then size limitations of the host and/or the local environment provided by the host may impact on the antenna circuit design and/or constrain the size of the antenna circuit or the antenna coil itself"), [0016] (explaining the inventive "NFC communicator" seeks to "alleviate[] at least some of the aforementioned problems" including size limitations of the host mobile device that may detrimentally affect the communicator's range); Kerdraon, [0001]-[0006] (recognizing that a "multiplicity of cards or applications" available on smartcard-

type devices increases the "complexity" of managing such cards and applications in a "mobile terminal," including where the applications are "in a smart card" chip), [0046] (discussing the mobile terminal "using protocols…to manage contactless communication"), [0070]–[0071] ("[M]obile terminal 21 including…a near-field communication (NFC) module 29" and "smart card controller" that "has ISO 14443" interface).

148. A person of ordinary skill in the art would have been motivated to apply Kerdraon's smartcard controller teachings to Bangs' NFC-enabled mobile phone to advantageously provide smartcard functionality in a mobile phone and eliminate a user's need to carry a separate smartcard device. Users regularly engage in secure transactions requiring authentication and regularly carry a mobile phone. For example, Dachs explains that integrating smartcard functions in mobile phones "exploits two basic principles of modern society," that everyone engages in smartcard transactions and everyone carries a phone. Ex. 1015, 468. U.S. Patent App. Pub. No. 2004/0133787 (published on July 8, 2004) further describes the benefits of reducing the number of devices a user needs to engage in everyday transactions. Ex.1031 [0038] ("[R]educe the risk to the device holder due to loss of the device."). *See also* Ex.1031 [0096]–[0097]. U.S. Patent No. 5,943,624 (issued on August 24, 1999) explains providing "smartcard functions" in a "cellular telephone" protects "smartcard electronics…from damage by the housing associated

with the cellular telephone" and also eliminates the risk that a separate smartcard device "will be lost or stolen." Ex.1023, 3:27–34. *See also* Ex.1023, 1:9-30. Instead of carrying a separate device for authentication, e.g., a credit card, access card, or ID card, storing and managing security data and applications on a smartcard controller hosted on a mobile phone provides the same authentication services through applications on a single device—the mobile terminal. *See* Ex.1015, 468 (explaining that integrating smartcard functions in mobile phones "exploits two basic principles of modern society: everyone needs to pay for products and everyday services and just about everyone carries a phone"); Kerdraon [0008] (stating the described invention offers "access to a plurality of applications stored in the mobile terminal"), [0027] (explaining an application may "stor[e] information relating to transactions effected by users via their mobile terminal"). In applying these teachings to Bangs, Bangs' controller 107, as modified with Kerdraon's smartcard controller teachings, would be coupled to device battery 11 via power provider 104 to receive power as discussed in [1.a] and [17.b] (*see* Sections IX.A.2.b and IX.A.2.o).

149. Moreover, a person of ordinary skill in the art would have further been motivated to include smartcard functionality into a mobile phone because it allows a user to view information about the smartcard and update information stored in the smartcard using the phone functionality. For example, Fox (Ex. 1023) discloses that a cellular phone's "display" and "functionality" provide enhanced features for

smartcard functionality. Ex. 1023, 2:21-29 (explaining integration of smartcard functionality provides "the ability to read and access information stored within the smartcard by utilizing the cellular telephone display" and "the ability to update/change information stored within the smartcard by utilizing the cellular telephone functions"); Ex. 1031, [0078] (explaining integration of smartcard functionality "provides the capability to display information to a user of the device" and "interaction with the display…via the function control buttons…to select a credit card number").

150. Because Bangs already teaches controller 107 accesses and manages stored data (Bangs [0049], [0067]), implementing Kerdraon's smartcard controller teachings in Bangs' NFC-enabled mobile phone would have been a straightforward modification. Similar to Bangs' controller, which accesses and manages stored data, Kerdraon teaches a smartcard controller likewise accesses and manages stored data, but the data relates to smartcard functions, e.g., "Java Card application…Cardlets." [0071], [0073]. A person of ordinary skill in the art would have understood that Bangs' controller 107 may be implemented with application specific smartcard functions, as taught by Kerdraon. For example, the software application with the smartcard functions would be stored in the memory accessible by controller 107 so that controller 107 can run the application and perform the smartcard functions. Thus, a person of ordinary skill in the art would have found it straightforward and

advantageous to apply Kerdraon's smartcard controller teaching to Bangs' NFC-enabled mobile phone, and would have known such a combination (yielding the claimed limitations) would predictably work and provide the expected functionality.

151. A person of ordinary skill in the art would have further been motivated to implement Bangs' NFC-enabled mobile phone such that it interacts with an external NFC reader, as taught by Kerdraon. Doing so would advantageously facilitate the phone's use in the wide range of NFC functionalities that had been developed at the time. For example, Bangs states NFC communicators "need to be compatible with existing RFID readers" and identifies "payment systems" as an example application for NFC. Bangs [0006], [0009], [0014]. Kerdraon provides further detail and explains certain "applications…render[ing] a set of services" from mobile terminal 21 may be "activat[ed]" through a "local external reader," e.g., "for a service payment service." Kerdraon [0067].

152. Because Bangs already teaches its NFC-enabled mobile phone interacts with other NFC communicators (Bangs [0039]), applying Kerdraon's external NFC reader interaction teachings would have been straightforward. For example, Bangs' NFC-enabled phone is "compatible" with "protocols set out in…ISO/IEC 14443." Bangs [0052]. Kerdraon teaches its external NFC reader communicates with NFC-enabled mobile terminal 21 in accordance with ISO 14443. [0070]–[0071]. Thus, a person of ordinary skill in the art would have found it straightforward and

advantageous to apply Kerdraon's external NFC reader interaction teachings to Bangs' NFC-enabled mobile phone interactions and would have known such a combination (yielding the claimed limitations) would predictably work and provide the expected functionality.

C. GROUND 3: BANGS IN VIEW OF KOH RENDERS OBVIOUS CLAIMS 1–8 AND 17–20

153. To the extent it is argued the '053 patent is entitled to claim priority to August 8, 2008, the Claims are rendered obvious by Bangs in view of Koh.

154. As set forth for Ground 1, Bangs discloses an NFC-enabled phone and operational components that provide the NFC functionality. Koh discloses **a smartcard controller** (*e.g.,* "Smart MX (SMX) module") as recited in each claim. Moreover, to the extent it is argued Bangs does not disclose a "Near Field Communication (NFC) reader," Koh discloses **interaction with a Near Field Communication (NFC) reader** (*e.g.,* "reader 310" for "near field communication") as recited in [1.c]-[1.d], [17.pre], [17.d] (Sections IX.A.2.d, e, m, and q).

155. Koh discloses "a near field communication (NFC) enabled cellphone that includes a Smart MX (SMX) module." [0033]. Koh's SmartMX module, which is described as a "smart card module," is a smartcard controller. [0033]. For example, the '053 patent admits that "[t]he 'SmartMX' family of controllers available from NXP Semiconductors N.V. of The Netherlands are examples of suitable dual interface smartcard controllers." '053 patent, 9:25–38. Moreover, Koh

explains SmartMX "is preloaded with an operating system JCOP 4.1," a smartcard controller operating system. Koh [0032]. *See, e.g.,* Ex. 1015 at 468–69 (explaining the Smart MX "Smart card IC" uses a "JCOP operating system (Java Card Open Platform)"); Ex. 1036, *55 (identifying "the Java Card concept" as "one of the most widely utilised multi-application smart card platforms"). As another example, U.S. Patent App. Pub. No. 2008/0235796 (filed August 9, 2006) explains "smart card controller solution[s]…run versatile, open application environment[s] such as Java Card." Ex. 1026, [0040].

156. Koh further discloses interaction between the NFC-enabled phone and "RFID reader 310." Koh [0041]. For example, the NFC-enabled phone includes an "RFID interface," compliant with ISO 14443, "that allows the cellphone to act as a tag" such that "RFID reader 310" can "read the tag ID and essential data" from the device. [0033], [0041]. Because RFID reader 310 communicates with an NFC device, it is an NFC reader. For example, Fisher explains "NFC readers" are "usable" with NFC devices, and "read[] information" from NFC tag devices. *See* Fisher [0007], [0039]. NFC between a tag and reader is based on ISO 14443, the international standard for smartcard communication. For example, in a June 2008 article published on the well-known and readily accessible Java Technical Articles section of Oracle.com (available at: https://www.oracle.com/technical-resources/articles/javame/nfc.html), C. Enrique Ortiz shows three known "NFC

Communication Modes" conform to "ISO 14443." Ex. 1030, Fig. 2. As another example, U.S. Patent App. Pub. No. 2008/0169351 (filed January 16, 2006) states "The standard for contactless smart card communications is ISO/IEC 14443, dated 2001." Ex. 1035 [0014]. *See also* Ex. 1029, [0007] ("Smartcards are governed by many standards, in particular, ISO/IEC standards 7816 and 14443.").

157. Like Bangs, Koh is analogous art, because it is in the same field as the '053 patent, which includes contactless communications devices, and is reasonably pertinent to alleged problems identified in the '053 patent, including incorporating contactless communication and smartcard functionality into a mobile device. *See* Section IX.B; *e.g.*, Koh, [0001]-[0006], [0010], [0012], [0032]-[0033], [0040], Fig. 2.

158. For example, like Bangs, Koh discusses contactless communications devices, such as NFC-enabled devices. *See, e.g.*, Koh, [0001]-[0002], [0010] (the inventive "portable device…includ[es] a contactless interface"), [0033] (describing "a near field communication (NFC) enabled cellphone that "is equipped with an RFID interface (e.g., ISO 14443)").

159. Additionally, Koh is pertinent to the alleged problems addressed by the '053 including incorporating contactless communication functionality, including smartcard functionality, into a mobile phone. *See, e.g.,* Koh, Koh [0002] ("present invention is related to electronic purses that can be advantageously used in portable

devices configured for…mobile commerce"), [0003]-[0006] (noting the desire to expand "contactless smart card technology" such as "MIFARE" "into other areas such as e-commerce and m[obile]-commerce), [0012] ("one of the objects of the present inventions is to provide a mechanism to be embedded in devices, especially portable devices, to function as an electronic purpose (e-purse) to be to conduct transactions over an open network with a payment server without compromising security"), [0032] ("a smart card has a preloaded smart card operation system that provides security framework to control the access to the smart card"), [0033] ("An example of [a cellphone embedded with a smartcard module] is a near field communication (NFC) enabled cellphone that includes a Smart MX (SMX) module.").

160. A person of ordinary skill in the art would have been motivated to apply Koh's smartcard controller teachings to Bangs' NFC-enabled mobile phone to advantageously eliminate the user's need to carry a separate smartcard device to use smartcard functionality. Users regularly engage in secure transactions requiring authentication and regularly carry a mobile phone. *See* Ex. 1015, 468. Instead of carrying a separate device for authentication, *e.g.,* a credit card, access card, or ID card, storing and managing security data and applications on a smartcard controller hosted on a mobile phone provides the same authentication services through applications on a single device—the mobile terminal. *See* Ex. 1015, 468 (explaining

that smartcard integration in mobile phones "exploits two basic principles of modern society: everyone needs to pay for products and everyday services and just about everyone carries a phone"). Moreover, a person of ordinary skill in the art would have further been motivated to include smartcard functionality in a mobile phone because it allows a user to view information about the smartcard and update information stored in the smartcard using the phone functionality. Ex.1023, 2:21-29 (explaining integration of smartcard functionality provides "the ability to read and access information stored within the smartcard by utilizing the cellular telephone display" and "the ability to update/change information stored within the smartcard by utilizing the cellular telephone functions").

161. Because Bangs already teaches that controller 107 performs generic controller functions, including "processing" requests received from another component and accessing "store[d] data" to provide a "response" (Bangs [0049]–[0051]), it would have been straightforward to apply Koh's smartcard controller teachings to Bangs' mobile device. *See* Bangs [0049], [0067]. Koh's SmartMX smartcard controller "stor[es] values" and "run[s] Java applets" effecting smartcard functionality. Koh [0033]. Similar to Bangs' controller, which processes requests and provides responses, Koh teaches a smartcard controller likewise processes requests and provides responses, and does so for smartcard applications, *e.g.,* to effect mobile payments. Bangs [0049], [0067]; Koh [0053]. A person of ordinary

skill in the art would have understood, and at a minimum found it obvious, to implement Bangs' controller 107 with application specific smartcard functions, as taught by Koh. As such, a person of ordinary skill in the art would have found it straightforward and advantageous to apply Koh's smartcard controller teachings to Bangs' NFC-enabled mobile phone and would have known such a combination (yielding the claimed limitations) would predictably work and provide the expected functionality.

162. A person of ordinary skill in the art would have further been motivated to implement Bangs' NFC-enabled mobile phone such that it interacts with an NFC reader, as taught by Koh. Doing so would advantageously enable the phone's use in various NFC applications. For example, Bangs states NFC communicators "need to be compatible with existing RFID readers" and identifies "payment systems" as an example application for NFC. Bangs [0006], [0009], [0014], [0098]. Koh provides further detail on the interaction between an NFC-enabled cellphone and a reader to complete a payment in such a system using an "e-purse applet…residing in the cellphone." Koh [0035], [0041].

163. Because Bangs already teaches its NFC-enabled phone interacts with other NFC communicators (Bangs [0039]), applying Koh's external NFC reader teachings to Bangs' NFC-enabled phone would have been straightforward. For example, Bangs' NFC-enabled phone is "compatible" with "protocols set out

in…ISO/IEC 14443." Bangs [0052]. Koh teaches reader 310 communicates with an NFC-enabled phone over ISO 14443. [0033]. Thus, a person of ordinary skill in the art would have found it straightforward and advantageous to apply Koh's NFC reader interaction teachings to Bangs' NFC-enabled mobile interactions and would have known such a combination (yielding the claimed limitations) would predictably work and provide the expected functionality.

D. GROUNDS 4–6: GROUNDS 1–3 IN FURTHER VIEW OF FISHER RENDERS OBVIOUS CLAIMS 2–4 AND 19–20

164. To the extent Patent Owner argues further disclosure is required for [2] and [19] (Sections IX.A.2.f and s), Fisher discloses **ticketing information for a mass transit system** (*e.g.,* transmitted "total amount…stored on the smart card of wireless mobile device" to allow a "bus fare [to be] deducted from" a "smart card").

165. Fisher discloses "known" transactions that leverage NFC include mobile payment transactions and purchasing transit tickets. Fisher [0006]–[0007]. In the mass transit example, a user purchases a bus ticket "by simply waving the wireless mobile device near a reader on the bus, so that the bus fare is deducted from" a "total amount" that is "stored on the smart card of the wireless mobile device." [0006]. A person of ordinary skill in the art would have understood, and at minimum found it obvious, that the NFC-enabled mobile device obtains information confirming the available funds "stored on the smart card of the wireless mobile device" to allow the reader on the bus to confirm that the funds on the smart

card are sufficient to pay for the bus ticket. [0006]. In addition, Fisher further discloses sending an "RFID for identification purposes" to the bus reader, which the reader forwards to a server, which in turn identifies the "identification code of the particular RFID," and uses this information to "charge the user." [0006]. The RFID is "ticketing information" because it identifies the account associated with the ticket, allowing the system to deduct the fare from the associated account.

166. Moreover, to the extent Patent Owner argues further disclosure is required for [3]-[4] and [20] (Sections IX.A.2.g, h, and t), **Fisher discloses transmitted data** (*e.g.,* "transmit[ted]…transaction request signal") **includes transaction information for a mobile payment** (*e.g.,* "include[s] identification code associated with the user, as well as information relative to the transaction") as recited in [3] and [20] (Sections IX.A.2.g and t), and **a point-of-sale reader** (*e.g.,* "point of sale terminal reader" using "NFC communications") as recited in [4] (Section IX.A.2.h).

167. Fisher discloses transmitting information between the NFC-enabled mobile device and "point-of-sale terminal" to complete a transaction. Fisher [0025], [0009]. The mobile device transmits a "transaction request signal" to a point-of-sale terminal, and the point-of-sale terminal forwards the signal to a remote server that "verifies the transaction," "identifies the user," and "provides…a first transaction response signal." [0025]. Fisher further explains the transaction request signal

transmitted from the mobile device includes an "identification code associated with the user" and "information relative to the transaction, such as item, quantity, vendor." [0033].

168. Fisher further discloses the point-of-sale terminal is a "reader…includ[ing] the provision for NFC communications." Fisher [0039]. The terminal "has the capability of electronically reading" information from an NFC-enabled mobile device and "simply bringing…the NFC transceiver" of a mobile device near the point-of-sale "will cause initiation of a transaction." [0039].

169. Like Bangs, Kerdraon, and Koh, Fisher is analogous art, because it is in the same field as the '053 patent, which includes contactless communications devices, and is reasonably pertinent to the alleged problems identified in the '053 patent, including incorporating contactless communication and smartcard functionality into a mobile device. *See* Sections IX.B and IX.C, *e.g.*, Fisher, [0006]–[0007], [0009], [0024], [0033].

170. For example, like Bangs, Fisher discusses contactless communications devices, such as NFC-enabled devices. *See, e.g.*, Fisher, [0006] ("[W]ireless mobile devices that include a near field communication (NFC) device."), [0009] ("[A] method and apparatus for completing a transaction using a wireless mobile communication channel and…another communication channel that provides for near field radio channels (NFC).").

171. Additionally, Fisher is pertinent to the alleged problems addressed by the ’053 including, incorporating contactless communication functionality, including smartcard functionality, into a mobile device. *See, e.g.,* Fisher, [0006]-[0007] (“[W]ireless mobile devices that include a near field communication (NFC) device, coupled with…a smartcard…for identification purpoes, allow for debit cards to securely make a simple transaction.”), [0009] (“The present invention provides a method and apparatus for completing a transaction using a wireless mobile communication channel and…another communication channel that provides for near field radio channels (NFC).”), [0024] (“[T]he mobile device…has the functionality to communicate with one of many different a point of sale (POS) terminals 150-1 to 150-*n*, prefereably in a contactless manner.”), [0033] (explaining the mobile device includes a “secure element 130 being commonly known as a smart card”).

172. A person of ordinary skill in the art would have been motivated to apply Fisher’s bus ticket purchase teachings in implementing Bangs’ NFC-enabled mobile phone (as optionally modified by Kerdraon’s or Koh’s teachings). While Bangs teaches NFC “areas of application” include “payment systems” and “ticketing systems” for mass transit (Bangs [0006]), Bangs is silent on the data that is transmitted to complete transactions in these applications. A person of ordinary skill in the art would have looked to Fisher for such implementation details. For example,

a person of ordinary skill in the art would have been motivated to apply Fisher's teachings of sending an identification code in implementing Bangs' NFC-enabled mobile phone communication (as optionally modified by Kerdraon's or Koh's teachings) to advantageously facilitate access control in a mass transit system using a mobile phone and eliminate the need to carry a separate transit card. *See, e.g.,* Ex. 1036, *17 (stating "the use of…mobile phones with contact-less card interfaces (NFC) make" "public transport" "systems even more convenient and popular" and "offers flexibility, fraud reduction, speed"). A person of ordinary skill in the art also would have been motivated to apply Fisher's transaction request signal teachings to advantageously facilitate payment transactions using Bangs' mobile phone and eliminate the need to carry a separate payment device, *e.g.,* a credit card.

173. A person of ordinary skill in the art would have further been motivated to apply Fisher's interaction with an NFC point-of-sale reader teachings to Bangs' NFC-enabled mobile phone (as optionally modified by Kerdraon's or Koh's teachings). Bangs teaches leveraging NFC in payment systems but is silent on the types of reader devices used to complete payment transactions. A person of ordinary skill in the art would have looked to Fisher for such implementation detail. For example, a person of ordinary skill in the art would have been motivated to apply Fisher's NFC point-of-sale reader interaction teachings to advantageously allow a user to purchase items without the need to carry cash or credit cards.

174. Because Bangs (as optionally modified by Kerdraon's or Koh's teachings) already teaches an NFC-enabled mobile phone that interacts with a reader to complete various NFC transactions, a person of ordinary skill in the art would have had a reasonable expectation of success applying Fisher's teachings of transmitting data for facilitating bus ticket purchases and point-of-sale reader teachings to Bangs' NFC-enabled mobile device.

175. Thus, a person of ordinary skill in the art would have found it straightforward and advantageous to apply Fisher's bus ticket purchase and NFC point-of-sale teachings to Bangs' NFC-enabled mobile phone (as optionally modified by Kerdraon's or Koh's teachings) and would have known such a combination (yielding the claimed limitations) would predictably work and provide the expected functionality.

X. SECONDARY CONSIDERATIONS

176. The Challenged Claims of the '053 patent are anticipated by and/or rendered obvious by the grounds presented herein. The strength of these grounds that I discuss above cannot be overcome by any alleged objective indicia.

177. There is no evidence in the '053 patent's prosecution history or elsewhere supporting any secondary considerations arguments, or evidence of nexus to any challenged Claim. *See generally* '053 File History. Indeed, as demonstrated

by the prior art referenced herein, any purported solutions to problems or unexpected results in the ’053 patent were already well known.

178. To the extent that Patent Owner contends that the accused products in the Texas Case are infringing and thus demonstrate commercial success, any such allegations would fail to provide any indication that the Claims are non-obvious. Such assertions would not demonstrate that Samsung’s products infringe, let alone show any nexus between any alleged commercial success and the Claims, or that any alleged success is due to an allegedly claimed component instead of the many unclaimed features of the accused products.

179. To the extent Patent Owner asserts the existence of any additional secondary considerations in its responses, or presents additional evidence or arguments, I reserve my right to address any such evidence.

XI. CONCLUSION

180. In summary, I have concluded that the Challenged Claims are anticipated by and/or rendered obvious over the prior art references as I have discussed above. Specifically, in my opinion, for at least the reasons above, the Challenged Claims of the ’053 patent are anticipated and/or obvious.

181. To the extent it is argued that any further disclosure is required for an element in the Challenged Claims that I have identified as being disclosed, a person of ordinary skill in the art would certainly have found that element obvious to include

based on the sample explicit disclosure or inherent disclosures and analysis I have identified above.

182. I reserve the right to supplement my opinions in the future to respond to any arguments that Patent Owner or its expert(s) may raise and to take into account new information as it becomes available to me.

183. In signing this declaration, I recognize that the declaration will be filed as evidence in a contested case before the Patent Trial and Appeal Board of the United States Patent and Trademark Office. I also recognize that I may be subject to cross-examination in the case and that cross-examination will take place within the United States. If cross-examination is required of me, I will appear for cross-examination within the United States during the time allotted for cross-examination.

184. I hereby declare that all statements made herein of my own knowledge are true and that all statements made on information and belief are believed to be true; and further that these statements were made with the knowledge that willful false statements and the like so made are punishable by fine or imprisonment, or both, under Section 1001 of Title 18 of the United States Code.

185. Executed this 11th day of March 2025, in Atlanta, Georgia.

Dr. Emmanouil Tentzeris

APPENDIX A

MANOS (EMMANOUIL) M. TENTZERIS
Ed and Pat Joy Chair Professor
Georgia Institute of Technology,
School of Electrical and Computer Engineering
14 January 2025

I: EARNED DEGREES

• Ph.D., University of Michigan, Ann Arbor, 1998 (Graduate Advisor: Prof. Linda P.B.Katehi)

• M.Sc., University of Michigan, Ann Arbor, 1994

• B.S.E.E. (Diploma-"Summa Cum Laude") National Technical University of Athens, GREECE, 1992

II: EMPLOYMENT HISTORY

- Ed and Pat Joy Chair Professor in antennas, School of Electrical and Computer Engineering, Georgia Tech, 2023-Present
- Ken Byers Professor in flexible electronics, School of Electrical and Computer Engineering, Georgia Tech, 2016-2023
- Professor, School of Electrical and Computer Engineering, Georgia Tech, 2009-2016
- Humboldt Guest Professor, FAU, Nuremberg, GERMANY, 8/19-12/19.
- MediaTek Visiting Professor, NTU, Singapore, 1/18-12/18.
- Finland Distinguished Professor (Fi.Di.Pro.), TUT, 8/12-12/16
- Distinguished Visiting Professor, LAAS, Toulouse, 5/12-8/12
- Visiting Professor, GTRI-Ireland, Athlone, Ireland, 5/09-7/09
- Associate Professor, School of Electrical and Computer Engineering, Georgia Tech, 2004-2009
- Invited Professor, School of Electrical and Computer Engineering, Technical University of Munich, Germany, 5/02-8/02
- Assistant Professor, School of Electrical and Computer Engineering, Georgia Tech, 1998-2004
- Research Assistant, Radiation Laboratory, University of Michigan, Ann Arbor, MI, 1992-1998
- Research Assistant, Microwave Lab, National Technical University of Athens, Greece, 1991-1992

III: HONORS AND AWARDS

- IEEE Fellow
- IEEE EPS Distinguished Lecturer
- IEEE MTT-S Distinguished Microwave Lecturer (2010-2012)
- Origami RF research was featured in a publication in the Proceedings of National Academy of Science (PNAS) in November 2018.
- Listed among the Top-25 Downloaded IEEE Sensor Papers in November 2013 and in December 2011.
- Listed among the 99th percentile of Scientific Reports with 126,000+ article accesses since 1/2021.

- Listed among the 25 featured “Science@Microsoft” Technologies highlighting the most significant achievements of Microsoft Reseach over its 20 years of activities [http://www.microsoft.com/en-us/researchconnections/science/stories/anti-counterfeit.aspx]
- “5G as a Wireless Grid Technology” was listed among the Top 10 emerging technologies of 2021 published by Scientific American and The World Economic Forum [https://www.scientificamerican.com/page/contributors-to-top-10-emerging-technologies-of-2021/]
- 2024 Georgia Tech Outstanding Achievement in Research Innovation Award
- 2024 IEEE International Microwave Symposium (IMS) Best Student Paper Award
- 2024 IEEE Conference on RFID Technologies and Applications (RFID-TA) Best Student Paper Award
- 2023 Proceedings of IEEE Best Paper Award
- 2023-2027 IEEE EPS Distinguished Lecturer
- 2023 IEEE Wireless Power Technology Conference & Expo (WPTCE) Second Best Contibution Award
- 2022 Georgia Tech Outstanding Doctoral Thesis Advisor Award
- 2021 IEEE Antennas and Propagation Symposium (APS) Best Student Paper Award
- 2019 Humboldt Research Prize
- 2016-2022 IEEE CRFID (RFID Council) Distinguished Lecturer
- 2018 IEEE ECTC Intel Best Student Paper Award
- 2018 ISAP Second Best Paper Award
- 2017 IMAPS Best Student Paper Award
- 2017 SRC TECHCON Best-in-Session Award
- 2017 Georgia Tech Outstanding Achievement in Research Program Development Award
- 2017 Archimedes IP Salon Gold Medal
- 2016 Bell Labs Prize Third Award
- 2016 GOMACTech Best Poster Paper Award
- 2016 Georgia Tech Capstone Design Expo Best Overall Project ECE, December 2016
- 2015 IET Microwaves, Antennas and Propagation Premium Award
- 2014 Georgia Tech ECE Distinguished Faculty Achievement Award
- 2014 IEEE Conference on RFID Technologies and Applications (RFID-TA) Best Student Paper Award
- 2013 IET Microwaves, Antennas and Propagation Premium Award
- 2013 IEEE Wireless Power Transfer Conference (WPTC) Second Best Paper Award
- 2012 FiDiPro [Finland Distinguished Professor] Award from the Academy of Finland
- 2012 iCMG Architecture Award of Excellence
- Selected by NSF to represent US as a member of a team of 5 US prominent researchers, that participated in the US-Ireland R&D Partnership Telecommunications Workshop, hold in 11/2011 in Dublin, Ireland, and focusing on Millimeter-wave and sub-THz communication systems.

- Prof. Tentzeris' research activity in electromagnetic energy scavenging has been highlighted in CBS, NSF Homepage, MSNBC, CNN, Yahoo, Discovery Channel, Boston Globe, IEEE The Institute and 500+ top High-Tech sites (e.g. engagdget.com) as well as in numerous international newspapers (e.g. Asahi Shibun, Vima, Kathimerini, …) as one of the major technical inventions of 2011.
- Selected by SRC and NSF to be part of the 25-member US team to participate in the SRC/NSF/SFI Forum on Integrated Sensors for Cybersystems (FISC-2030) that took place in Ireland in 3/2012 aiming in identifying the critical ultra-low-power (low-frequency, UHF, RF and millimeter-wave) sensor technologies by 2030 and define global guidelines.
- Member of the first Oustanding U.S. Alumni Class of Alexander von Humboldt Foundation/German Research Foundation (DFG)
- 2011 International Workshop on Structural Health Monitoring Best Student Paper Award
- 2010 IEEE Antennas and Propagation Society Piergorgio L. E. Uslenghi Letters Prize Paper Award
- 2010 Georgia Tech Senior Faculty Outstanding Undergraduate Research Mentor Award
- 2010 World-Wide Distinguished Professor Award from the State Administration of Foreign Experts Affairs of China
- 2009 IEEE Transactions on Components and Packaging Technologies Best Paper Award
- 2009 IEEE Antennas and Propagation Symposium (APS) Second Best Student Paper Award
- 2009 E.T.S. Walton Award from Science Foundation Ireland (SFI)
- 2000 NSF CAREER Award
- 2008 IEEE International Microwave Symposium (IMS) Honorable Mention Student Paper Award.
- 2007 IEEE Antennas and Propagation Symposium (APS) Best Student Paper Award.
- 2007 IEEE International Microwave Symposium (IMS) Third Best Student Paper Award.
- 2007 IEEE International Symposium on Antennas and Propagation (ISAP) Poster Presentation Award.
- 2006 Asian-Pacific Microwave Conference (APMC) Award.
- 2006 IEEE Microwave Theory and Techniques (MTT) Society Outstanding Young Engineer Award.
- 2003 IEEE Components, Packaging and Materials' Technology (CPMT) Society Outstanding Young Engineer Award.
- 2004 IBA International Educator of the Year Award.
- 2004 IEEE Transactions on Advanced Packaging Commendable Paper Award.
- 2003 NASA Godfrey "Art" Anzic Collaborative Distinguished Publication Award.
- Best Paper Award by the International Symposium in Microwave and Millimeter-Wave Technology, Beijing, CHINA, August 2002.
- 2002 Outstanding Junior Faculty Award, School of ECE, Georgia Tech.
- Best Paper Award by the Advanced Computational Electromagnetics Society (ACES), ACES Conference, Monterey, CA, March 2001.

- • Listed at ”Who-is-Who in America”, Marquis Eds., 2002-2011 and at ”Who-is-Who in the World”, Marquis Eds.,2003-2011.
- Best Paper Award by the International Hybrid Microelectronics and Packaging Society, ISHM, Philadelphia, PA, October 1997.
- Greek Government Academic Excellence Fellowships, 1988-1992.
- Papastavridios Greek Mathematics Excellence Fellowship, 1989.

TEACHING

III.A : INDIVIDUAL STUDENT GUIDANCE

III.A.1. Research Personnel

1. R.Li, Research Scientist II, “Design and Optimization of Compact/Multiband Antennas for Broadband Wireless Applications (PCS, GSM,WLAN, LMDS, UWB, mm-wave)”, Period of Collaboration: Summer 2001 – Fall 2011.
2. Y.Fang, Research Scientist, ”Nanotechnology-Based Gas, Chemical and Biological Wireless Sensors”, Period of Collaboration: 2014 – now.
3. Xiaoqiang Zhang, ‘Railway applications of RFID’s”, Visiting Professor, Period of Collaboration: Spring 2010-Spring 2011
4. Min Jin, “Smart skin configurations”, Visiting Professor, Period of Collaboration: Spring 2010-Spring 2011
5. D.Staiculescu, Research Engineer II, “Design and Optimization of SOP Multilayer Wireless Modules Using Statistical and Genetic Algorithms for Biosensing Applications”, Period of Collaboration: Fall 2003 - 2009.
6. G.Jin, “Inkjet-Printed Wideband Baluns for Wearable RF Modules”, Visiting Professor, Period of Collaboration: Summer 2011-Summer 2012.
7. Y.Kawahara, “RF Power Scavenging Modules for Internet of Things Applications”, Visiting Professor, Period of Collaboration: Fall 2011-Fall 2013.
8. H.R.Ahn, “Broadband Couplers for Arbitrarily High Coupling Ratios”, Visiting Scientist, Period of Collaboration: Summer 2015-Summer 2016.

III.A.2. Postdoctoral Fellows

1. N.Bushyager, “Application of Fluid-Dynamics Computational Techniques to the Design of Compact Wireless Modules”, Period of Collaboration: Spring 2005 - Spring 2006.
2. C.You, “Hybrid Electromagnetic/Mechanical Modeling, Design and Optimization of Antenna Arrays on Composite Materials”, Period of Collaboration: Fall 2005 - Fall 2007.
3. D.Anagnostou, “Design of Large Antenna Arrays on Flexible Organics for Space Applications”, Period of Collaboration: Fall 2005 - Fall 2006.

III.A.2.2 Visiting Scholars

1. Masaya Ote (Japan Patent Office) [7/19-2/20]
2. Dr. Eva Antonino Daviu, Profesora Titular de Universidad, Universitat Politecnica de Valencia, Spain [4/19-7/19]
3. Dr. Sungjoon Lim, Professor, School of Electrical and Electronics Engineering, Chung-Ang University, Seoul, Republic of Korea [7/18-2/20]
4. Dr. Wang-Sang Lee, Associate Professor, Department of Electronic Engineering, Gyeongsang National University, Gyeongnam, Republic of Korea [7/18-8/19]
5. Dr. Hyoungsuk Yoo, Associate Professor, University of Ulsan, Republic of Korea [7/17-8/18]
6. Dr. Apostolos Georgiadis, Associate Professor, Heriot-Watt University, UK / Marie Curie Global Fellow [2/16-9/17]
7. Dr. Yoshihiro Kawahara, Assistant Professor/Lecturer, The University of Tokyo [10/11-9/13]
8. Dr. Wolfgang Hoefer, Professor, University of Victoria, Canada [3/05-4/05]

III.A.3. Ph.D. Students

III.A.3.1. Graduated Ph.D. Students

1. N.Bushyager, "Novel Adaptive Time-Domain Techniques for the Analysis and Design of Complex RF and Wireless Structures", Period Advised: Fall 1999 - Fall 2004, GRADUATED: December 2004, Current Employer: Northrop-Grumman.
2. D.Thompson, "Novel Microwave Structures on Organic and Liquid Crystal Polymer (LCP) Substrates", (Main advisor; co-advisor: Prof. J.Papapolymerou), Period Advised: Fall 2002 – Spring 2006, GRADUATED: April 2006, Current Employer: Ansoft.
3. G.DeJean, "Multilayer Multiband Compact Antennas for Wireless/WLAN Applications", Period Advised: Fall 2001 - Fall 2006, GRADUATED: January 2007, Current Employer: Microsoft Research Center.
4. I.-K.Kim, "Design of Fractal-based Filters and Compact Endfire Antennas in Organic and Ceramic Multilayer Technologies", Period Advised: Spring 2004 - Spring 2006, GRADUATED: April 2006. (Yonsei University, KOREA, co-advisor: Prof. J.-G.Yook), Current Employer: Samsung. Dr.Kim spent significant amount of time (aggregate of 2 years) at GEDC covering the 80% of the design and all fabrication and experiments for his Ph.D. Thesis; the effort culminated in 2 Journal and 3 Conference Publications
5. J.H.Lee, "Hybrid EM and Circuit Optimization of RF Devices Built on Si, GaAs and Multilayer Ceramic (LTCC) and Organic Substrates", Period Advised: Fall 2001 - Fall 2006, GRADUATED: June 2007, Current Employer: Skyworks.
6. S.Nikolaou, "UWB Antennas and Integrated Modules on Silicon Substrates", (Main advisor; coadvisor: Prof. J.Papapolymerou), Period Advised: Fall 2003 - Summer 2007, GRADUATED: June 2007, Current Employer: Frederick University (Cyprus).
7. L.Martin, "Nanomagnetic Materials for Miniaturized UHF/VHF Antennas", (Main advisor; coadvisor: Prof. C.P.Wong), Period Advised: Fall 2003 - Spring 2008, GRADUATED: March 2008, Current Employer: Motorola.

8. Bo Pan, “Ultrawideband Antennas and Ultra-Low-Loss Transitions on Micromachined Silicon and Glass Substrates for Millimeter-Wave Applications”, (Equal advising load with co-advisor: Prof. J.Papapolymerou), Period Advised: Fall 03 - Spring 2008, GRADUATED: Spring 2008, Current Employer: Wionics.
9. V.Palazzari, “Design of Novel Filters in LCP Multilayer Structures”, Period Advised: Spring 2003 -Fall 2003, Ph.D.; GRADUATED: 11/2003 (University of Perugia, ITALY; Equal advising load with co-advisor: Prof. L.Roselli), Current Employer: W.I.S. (Italy) Dr. Palazzari spent the 11-month period from January-November 2003 in GEDC putting together the last 2 chapters of her PhD Thesis and performing most of the experimental work required for her PhD Thesis; Prof. Tentzeris started co-advising her during his trip to University of Perugia in September 2001; the effort culminated in 2 Journal and 2 Conference Publications.
10. Li Yang, “Inkjet-Printed Paper-Based RFID’s”, Period Advised: Fall 2005-Fall 2009, Ph.D., GRADUATED: 9/2009, Current Employer: Texas Instruments.
11. A.Rida, “Multiband and Wideband Antennas for Applications up to mmW”, Period Advised: Fall 2006-Spring 2011, GRADUATED: 3/2011, Current Employer: Northrop Gruman.
12. T.Wu, “Integrated Antennas for Communication and Sensing Applications”, Period Advised: Fall 2006-Spring 2011, GRADUATED: 4/2011, Current Employer: Direct TV
13. S.Kim, “Energy-Optimized Design Techniques for Wireless Communication and Ubiquitous Sensing Nodes”, Period Advised: Fall 2009-Fall 2011, PhD Proposal: 1/2011, GRADUATED: 11/2011, Current Employer: Intel.
14. S.Beck, “An Interference-Cancellation Receiver for Multi-Band and Multi-Standard Wireless Communication Systems”, Period Advised: Fall 2009-Summer 2011, PhD Proposal Exam: 9/2010, GRADUATED: 6/2011, Current Employer: Texas Instruments..
15. V.Lakafosis, “A hardware-Enabled Certificate of Authenticity System with Intrinsically High Entropy”, Period Advised: Fall 2007 -Present, passed Preliminary Exam: Fall 2007, GRADUATED: Spring 2013, Current Employer: CISCO.
16. H.Lee, “Inkjet-printed RF Modules for Sensing and Communication Applications”, period Advised: Fall 2009-Present, GRADUATED: Summer 2013, Current Employer: Southern Polytechnic State University (SPSU)
17. T.Thai, “Design and Development of Novel RF Sensors based on Far-Field and Near-Field Principles”, Period Advised: Spring 2007-Present, passed Preliminary Exam: Fall 2008, PhD Proposal Exam: Spring 2013, GRADUATED: Fall 2013, Current Employer: GE Global Research *Microsoft Fellowship Recipient*
18. R.Vyas, “An Embedded Wireless Energy Harvesting Platform (E-WEHP) for Powering Sensors using Existing Ambient Wireless Signals”, Period Advised: Fall 2006-Present, Passed Preliminary Exam: Fall 2007, Ph.D.Proposal: Spring 2013, GRADUATED: Spring 2014, Current Employer: University of Calgary, CANADA

19. J.Cooper, “A Novel Topology for Wireless Sensors Incorporating an Isotropic Radiator on an EBG Material”, Period Advised: Summer 2010-Present, Passed Preliminary Exam: Spring 2011, Ph.D.Proposal: Summer 2013, Expected GRADUATED: Spring 2014, Current Employer: Curo Corporation ***NSF Graduate Fellowship Recipient***

20. S.Kim, “Integrated Inkjet-Printed Sensors and Via-Enabled Structures for WSN and RFID-based Autonomous Wireless Sensor Platforms”, Period Advised: Fall 2010-Present, Passed Preliminary Exam: Fall 2010, Ph.D.Proposal: Fall 2013, GRADUATED: Fall 2014, Current Employer: Qualcomm
21. A.Traille, “Inkjet-Printed Ground-Penetrating Radar Systems”, Period Advised: Fall 2011-Present (LAAS-CNRS, France; Co-Advisor: Prof. H.Aubert), GRADUATED: Fall 2014.
22. B.Cook, “Vertical Integration of Inkjet-Printed RF Circuits and Systems”, Period Advised: Spring 2012-Present, Ph.D.Proposal: Fall 2013, GRADUATED: Summer 2014, Current Employer: Texas Instruments-Kilby Labs
23. T.Le, “Inkjet-Printed Graphene/CNT-Based Ultrasensitive Wireless Gas Sensors”, Period Advised: Spring 2012-Present, Passed Preliminary Exam: Fall 2013, GRADUATED: Fall 2016.
24. J.Bito, "Energy Harvesting and Wireless Power Transfer Systems", Period Advised: Fall 2013 – Fall 2017, Passed Preliminary Exam: Spring 2014, Expected GRADUATED: Fall 2017, Current Employer: Texas Instruments-Kilby Labs.
25. J.Kimionis, “Software-Defined-Radio Readers for RFID Applications”, Period Advised: Fall 2013-Fall 2017,GRADUATED: Fall 2017, Current Employer: Bell Labs.
26. W.Su, "Additively Manufactured Reconfigurable Microwave Components Based on Microfluidics for Wireless Sensing and Internet-of-Things Applications", Period Advised: Fall 2013 – Spring 2018, Passed Preliminary Exam: Spring 2014, GRADUATED: Spring 2018, Current Employer: Meta.
27. J.Hester, "Low-Cost Printed, Flexible and Energy Autonomous Van Atta and Carbon Nanotubes Based mm-Wave RFID Gas Sensors for Ultra-Long Range Ubiquitous IoT and 5G Implementations”, Period Advised: Fall 2013 – Summer 2019, Passed Preliminary Exam: Spring 2015, GRADUATED: Summer 2019, Current Employer: Atheraxon (Founder).
28. A.Nauroze, "Origami-Inspired Tunable RF Structures", Period Advised: Fall 2014-Fall 2019, GRADUATED: Fall 2019, Current Employer: Amazon.
29. S.Alotaibi, “Ultrasensitive Microwave Planar Metamaterial Sensors for Materials Characterization”, Period Advised: Spring 2016-2020, GRADUATED: February 2020, Current Employer: Aramco.
30. S.Jeong, "Applications of Machine Learning Strategy for Wireless Power Transfer and Identification", Period Advised: Fall 2014-2020, GRADUATED: April 2020, Current Employer: Qorvo.
31. Tong-Hong Lin, “Applications of Additive Manufacturing Technologies to Ambient Energy Harvesters for Microwave and Millimeter-Wave Autonomous Wireless Sensing Networks and 3D Packaging Integration”, Period Advised: Spring 2016-2020, GRADUATED: September 2020, Current Employer: Apple.

32. B.Tehrani, “Additive Manufacturing Solutions for Application-specific Millimeter-Wave Wireless System Design and Packaging”, Period Advised: Summer 2013-2020, GRADUATED: December 2020, Current Employer: Analog Devices.
33. R.Bahr, “Additive Manufacturing for High-Performance 3D Printed Millimeter-Wave Devices”, Period Advised: Spring 2015-2020, GRADUATED: December 2020, Current Employer: Dujud.
34. Xuanke He, “Additively Manufactured RF Components, Packaging, Modules and Flexible Modular Phased Arrays enabling widespread massively scalable mmWave/5G Applications”, Period Advised: Spring 2017-2021, GRADUATED: July 2021, Current Employer: Skyworks.
35. E.M.Jung, “Wideband, Quasi isotropic, km range RF Energy Harvesters for Perpetual IoT”, Period Advised: Fall 2018-2021, GRADUATED: December 2021, Current Employer: PowerCast.
36. A.Eid, “Novel Low-Cost Power-Autonomous mm-Wave RFID Architectures for IoT Implementations”, GRADUATED: December 2021, Current Employer: University of Michigan, Ann Arbor (Assistant Professor).
37. A.Alreshaid, “MM-wave Reconfigurable Antenna Systems for 5G Applications”, GRADUATED: January 2022, Current Employer: KFUPM (Assistant Professor)
38. Y.Cui, “Additively Manufactured Shape-changing RF Devices Enabled by Origami-inspired Structures”, GRADUATED: August 2022, Current Employer: Apple.
39. A.Adeyeye, “Novel RFID Systems and Techniques for Localization, Positioning and Sensing Applications”, GRADUATED: August 2022, Current Employer: Apple.
40. C.Lynch, “High Fidelity Localization of Energy Autonomous mmIDs for Future Cyber-Physical Systems”, Period Advised: Fall 2019-Present, Graduated: November 2023 , Current Employer: Apple.
41. K.Hu, “Additively Manufactured Flexible Hybrid Electronics (FHE) Enabled On-Package Phased Arrays for 5G/mmWaveWearable and Conformal Applications”, Period Advised: Spring 2020-Summer 2024, Graduated: August 2024, Current Employer: Analog Devices.

*. H.Kim, “CMOS Radio-Frequency Power Amplifiers for Multi-Standard Wireless Communications”, Period Advised: Spring 2010-Summer 2011, GRADUATED: 5/2011. [Academic Advisor]

*. K.-H.Lee, “Design of Signal Integrity Enhancement Circuits”, Period Advised: Summer 2010-Fall 2010, GRADUATED: 11/2010. [Academic Advisor]

*. S.Woo, “Low Noise RF CMOS Receiver Integrated Circuits”, Period Advised:Summer 2010-Fall 2010, GRADUATED: 10/2010. [Academic Advisor]

*. J.Cha, “A CMOS Radio-Frequency Front-End for Multi-Standatd Wireless Communications”, Period Advised: Summer 2010, GRADUATED: 8/2010. [Academic Advisor]

*. J.Choi, “Fully-Integrated DLL/PLL-Based CMOS Frequency Snthesizer for Wireless Systems”, Period Advised: Summer 2010, GRADUATED: 7/2010. [Academic Advisor]

*. H.-W.Kim, “CMOS RF Transmitter Front-End Module for High-Power Mobile Applications “, Period Advised: Spring 2010-Present, PhD Proposal Exam: 8/2011, GRADUATED: Spring 2012 [Academic Advisor], Current Employer: RFMD

III.A.3.2. Current Ph.D. Students

1. G.S.V.Angulo, “Printed Wireless Sensors for Space and Gas Detection Applications”, Period Advised: Fall 2021-Present, Expected Graduation: Fall 2025.
2. L.Smith, “Origami Reconfigurable Energy Harvesters”, Period Advised: Fall 2021-Present, Expected Graduation: Fall 2025.
3. I.-T.Chen, “Wireless Power Transfer and Zero-Power RF Components for Reconfigurable Intelligent Surfaces”, Period Advised: Fall 2021-Present, Expected Graduation: Fall 2025.
4. H.Al Jamal, “Self-Calibrated Tile-Based Antenna Arrays Using Computer Vision Techniques”, Period Advised: Fall 2022-Present, Expected Graduation: Fall 2026.
5. M.Joshi, “Multiband flexible RF enhanced-accuracy localization systems”, Period Advised: Fall 2022-Present, Expected Graduation: Fall 2026.
6. W.Callis, “Additively manufactured wireless bio/chemical sensors”, Period Advised: Fall 2022-Present, Expected Graduation: Fall 2026.
7. C.H.Hu, “Novel System-on-Package mmW and sub-THz structure”, Period Advised: Summer 2024-Present, Expected Graduation: Fall 2028.

III.A.3.3. Visiting Ph.D. Students

1. Francesco Positano (PhD student from LEAT@ Université côte d’Azur, France) [March-May 2024]
2. Myeongha Hwang (PhD student from Pusan National University, South Korea) [April 2024-Present]
3. Gaoya Dong (PhD student from Beijing University of Posts and Telecommunications (BUPT), Beijing, China) [Oct 2018-Oct 2019]
4. Yangyang Guan (PhD student from Beijing University of Posts and Telecommunications (BUPT), Beijing, China) [Jan 2018-Jan 2019]
5. Spyridon Daskalakis (Doctoral Fellow from University of Southampton, UK) [Nov 2018-Mar 2019]
6. Valentina Palazzi (PhD student from University of Perugia, Italy) [Dec 2016-Apr 2017]
7. Chiara Mariotti (PhD student from University of Perugia, Italy) [Nov 2013-Apr 2014 and Apr 2015-Jun 2015]
8. Luca Aluigi (PhD student from University of Perugia, Italy) [Jun 2011 – Dec 2011]
9. Cecilia Occhiuzzi (PhD student from Universita di Roma Tor Vergata, Italy) [Aug 2010-Dec 2010]
10. Giulia Orecchini (PhD student from University of Perugia, Italy) [2009-2010]
11. Luca Marcaccioli (PhD student from University of Perugia, Italy) [2004-2005]

III.A.4. M.Sc. Students

III.A.4.1. Graduated M.Sc. Students

1. B.McGarvey, "Efficient Numerical Coupling of FDTD and Solid-State Equations for 1D-circuits", Period Advised: Summer 2002 - Fall 2007, Graduation Date: Fall 2007, Current Employer: DoD-NSA.
2. S.Bassat, "Design and Optimization of RFID Compact Antennas", Period Advised: Fall 2003- Fall 2006, GRADUATED: Fall 06, Current Employer: Motorola.
3. N.Tavassolian, "UWB Antennas and Integrated Modules for Breast Cancer Detection Applications", Period Advised: Fall 2006-Summer 2007.
4. B.Kim, "Reconfigurable Multiband Antennas for mm-wave Applications", Period Advised: Summer 2005 - Fall 2006, Graduation Date: Fall 06 (Korea University, KOREA), Current Employer: Samsung.
5. L.Ward, "FDTD Modeling of the Crosstalk between Closely Spaced Microstrip Lines on Silicon Substrates", Period Advised: Summer 2000 - Winter 2000, Graduation Date: Winter 2000, Current Employer: Argon Labs.
6. E.Tsai, "Adaptive Modeling of Novel Micromachined Antennas on High-Resistivity Si Substrates", Period Advised: Spring 2001 - Fall 2002, Graduation Date: Fall 2002, Current Employer: Northrop-Grumman Corporation.
7. Y.Zhang, "Dual-Band Antenna Arrays for Conformal Space Applications", Period Advised: Fall 2007-Fall 2009 (UoLille/France; co-advisor: Prof.Pavlidis).
8. N. Chaisilwattana, "Novel UHF RFID Antennas for Automotive and Container Applications", Period Advised: Fall 2007-Fall 2009.
9. C.Kruesi, "3D Conformal Antennas for Supply-Chain and Inventory Tracking Applications", Period Advised: Fall 2007-Spring 2009.
10. J.Pan, "Compact RFID's on Metallic Structures", Period: Fall 2008-Fall 2009.
11. S.Mukala, "Wearable antennas integration with smart clothing", Period Advised: Fall 2009-Fall 2010.
12. A.Harrabi, "Novel RFID's for Agricultural Applications", Period Advised: Fall 2010-Fall 2011 (Faculty of Sciences in Tunis, Tunisia; co-advisor: Prof.Gharsallah)
13. Diapa Sanogo, "Broadband Harvesting Systems", Period Advised: Fall 2011
14. Guillaume Caillet, "RF Characterization of inkjet-printed CNT films and transmission lines", Thesis MSc Visiting Student from UoLille, FRANCE, Period Advised: Spring 2011-Fall 2011
15. Sebastien Mauzole, "Doubler implementations on ultralow-cost flexible materials for wireless crack detection", Thesis MSc Visiting Student from UoLille, FRANCE, Period Advised: Spring 2011-Fall 2011
16. S.Palacios, "Inkjet Printed Smart Wireless Integrated Modules (SWIM)", Period Advised: Fall 2012-Fall 2013

17. R.Herre, “Novel Inkjet printed Humidity Sensors”, Period Advised: Summer 2013-Fall 2013 (performed his MS Thesis Research as an Exchange Student from University of Erlangen-Nuremberg)
18. C.Saintsing, “Origami Foldable Structures for RF Sensing Applications”, Period Advised: Fall 2013-Fall 2014.
19. R.Bahr, "Inkjet Printed Wearable Motion Sensors", Period Advised: Summer 2014-Fall 2015
20. K.Nate, "3D Printed Origami Antennas", Period Advised: 2014-2015
21. M.Holda, ““Magic Cube” Platforms for Fully Integrated Wireless Sensing Nodes”, Period Advised: Summer 2022-Fall 2023.
22. N.Wille, “Interconnect Design and System Integration For 3D RF Reconfigurable Structures in Communications Applications”, Period Advised: Fall 2022-Spring 2024.
23. D.Dimitrova, “Wireless Power Grid Applications”, Period Advised: Summer 2024-Present.
24. W.Samo, “Submicron-Accuracy Additively Manufactured RF Structures”, Period Advised: Fall 2024-Present.

III.A.4.2 Visiting/Current M.Sc. Students

1. Shicong Wang, MS Student, Tongji University, Shanghai, China (10/17-9/19)

III.A.5. M.Sc./Ph.D. Special Problems Students

1. N.Vasiloglou, “Fractal Antennas for WiFi Modules”, Period Advised: Summer 2003 - Summer 2004.
2. F.Caliskan, “MPI Parallelization of FEM Algorithms”, Period Advised: Spring 2001.
3. K.Madidmanana, “Survey of Carbon Nanotube Fabrication Techniques for Semiconductive and Metal Surfaces”, Period Advised: Fall 2006 - Summer 2007.
4. U.Onyewuchi, “Development of WiMax Miniaturized Antenna Arrays for Base Stations”, Advised: Fall 2006 - Spring 2007

III.A.6. Undergraduate UROP/Special Problems Students

1. B.McGarvey, “Numerical Modeling of Cascaded Transmission Line Interfaces through the Use of Bounce Diagrams”, Period Advised: Winter 1999 - Fall 1999, UROP, Graduation Date: Fall 1999.
2. M.Delwar, “Numerical Modeling of Wire Antennas Using FDTD”, Period: Winter 1999 – Spring 1999, UROP, Graduation Date: Summer 1999.
3. T.Owens, “Numerical Design of a Coupled-Line Planar Filter”, Period: Winter 1999, UROP, Graduation Date: N/A.
4. M.Rutledge, “Study of Crosstalk Effects in Planar Transmission Lines”, Period: Winter 1999, UROP, Graduation Date: N/A.

5. M.Fisher, “Numerical Design of Interdigitated Filters”, Period: Fall 1998 - Summer 1999, UROP, Graduation Date: Fall 1999.
6. L.Compton, “Planar Antennas Analysis Using FDTD”, Period: Fall 1998 -Winter 1999, Independent Research, Graduation Date: Spring 1999.
7. Q.Yasser, “Review of Commonly Used High-Frequency Packaging Geometries”, Period: Winter 1999, Special Topics, Graduation Date: Spring 1999.
8. D.Gauthier, “Review of Amplifier Topologies Used in Wireless Communication Systems”, Period: Winter 1999, Special Topics, Graduation Date: Spring 1999.
9. K.Browse, “Preliminary Models of Finite-Ground Coplanar Waveguides”, Period: Fall 1999, Special Topics, Graduation Date: Summer 2000.
10. A. Awa, “Estimation of Health Effects Caused by Radiation of Handheld Unit Antennas”, Period: Fall 1999 - Summer 2000, Special Topics, Graduation Date: Summer 2000.
11. D.Feren, “Preliminary Design of a PCB for Monitoring the Beowulf Cluster”, Period: Spring 2000 -Summer 2000, Special Topics.
12. R.Myers, “Benchmarking of a Beowulf Cluster Using LINUX with MPI/PVM Interfaces”, Period: Fall 1999 - Fall 2000, Special Topics..
13. W.Frishe, “Development of GUIs for Commercial EM Simulators in Time-Domain”, Period: Spring 1999 - Fall 2001, UROP.
14. R.Cicconetti, C.Pearson, B.Moudry and S.McCord, “Development of Monitoring and Geometry Acquisition Tools and Parallelization of ATHENA Adaptive EM Simulation Tool using a BEOWULF Cluster”, Period: Summer 1999 - Fall 2001, Special Topics, Graduation Date: N/A.
15. S.Owens, “Gridding and Modeling of a Novel Wideband Vialess CPW-to-Mstrip Transition”, Period: Fall 2001, Special Topics, Graduation Date: Spring 2002.
16. S.Bassat, “Design Rules for the Minimization of Crosstalk for Finite-Ground Microstrip Lines in Space Applications”, Period: Spring 2002 - Fall 2003, Special Topics, Graduation Date: Fall 2003, ***President’s Undergraduate Research Award (PURA) recipient, School of ECE Undergraduate Research 2nd Place***.
17. S.Kulkarni, “Study of Nonsymmetrical Coplanar Waveguides that Are Embedded in Low-Resistivity Si Layers”, Period: Spring 2002 - Spring 2003, Special Topics, Graduation Date: Spring 2003, ***President’s Undergraduate Research Award (PURA) recipient*.**
18. J.Vickers, “Design and Modeling of LTCC Vertically-integrated Baluns in Microstrip and CPW Configurations”, Period: Spring 2002 - Fall 2002, Special Topics, Graduation Date: Fall 2002.
19. T.Cervantes, “Code Optimization for RF-MEMS Numerical Hubrid Simulators”, Period: Fall 2002 -Spring 2003, Special Topics, Graduation Date: Fall 2003.

20. G.Schumann, Anya Traille, C.Sanders, B.-C.Nguyen, “Setup of a new anechoic chamber up to 40 GHz/Modeling of Metamaterial-Based Circuits”, Period: Fall 2003-Spring 2004, Special Topics.
21. G.Doney, “Fabrication of 3D Metamaterial Structures”, Period: Spring 2005, Special Topics.
22. A.Rida, “Modeling of Micromachined Monopole Antennas”, Period: Spring 2005-Summer 2006, Special Topics, ***2006 IEEE MTT-S Undergraduate/Pre-graduate Scholarship Recipient.***
23. L.Nisonov, “Modeling and Design of Metamaterial/Loaded Transmission Lines”, Period: Spring 2005, Special Topics.
24. Q.Xu, “Development of RFID Antennas for Embedded Tire Applications”, Period: Spring 2005, Special Topics.
25. A.Sharpe, “60GHz Filters Using 3D resonators in LTCC Technologies”, Period: Spring 2005, Special Topics.
26. E.Tsai, “60GHz Yagi-Uda Antennas and Integration with Nanostructures”, Period: Summer 2005 -Fall 2005, Special Topics.
27. T.Ferrer, “HF and UHF RFID Characterization”, Period: Fall 2005 - Fall 2006, Special Topics, ***President’s Undergraduate Research Award (PURA) recipient.***
28. F.Falcon, “RFID’s for Container Tracking Applications”, Period: Fall 2005 - Fall 2006, Special Topics.
29. M.Pichkhadze, “Authentication Algorithms for RFIDs”, Period: Spring 2007, Special Topics.
30. D.Compston, “Modeling of Carbon-NanoTube Ultrasensitive Chemical Sensors”, Period: Spring 2007-Fall 2007, Special Topics.
31. T.Thai, “Nanoengineering Thermal Solutions on Graphene”, Period: Fall 2006-Fall 2007, Special Topics, ***President’s Undergraduate Research Award (PURA) recipient, 2007 Georgia Tech School of ECE Undergraduate Research Award recipient, 2007 IEEE MTT-S Undergraduate/Pre-graduate Scholarship recipient, 2007 SAIC Student Paper Award recipient.***
32. R.Moussounda, “Adhesives for Paper-Printed Electronics”, Period: Spring 2008-Fall 2008, Special Topics.
33. J.Pan, “Compact RFID’s on Metallic Structures”, Period: Spring 2008, Special Topics.
34. N.Gorheski, “Automotive Passive RFID’s with Enhanced Range”, Period: Spring 2008, Special Topics.
35. S.Travis, “Miniaturized Wideband/Dual-Band UHF Antennas”, Period: Fall 2007-Spring 2008, Special Topics.
36. J.Ratner, “Nanotechnology and Plasmonis RF Applications”, Period: Fall 2008-Spring 2009, Special Topics

37. Dora Ahbe, “Miniaturized Antennas for Smart-Skin Sensing Applications”, Period: Spring 2011-Summer 2011, ***Diploma Visiting Student*** from TU Karlsruhe, GERMANY
38. A.Amaya, “Inkjet-printed CNT-based Wireless Sensors”, Period: Fall 2009-Summer 2010, ORS/Special Topics**,** ***President’s Undergraduate Research Award (PURA) recipient.***
39. S.Palacios, “Conformal Automotive Radars”, Period: Fall 2009-Present, ORS/Special Topics**,** ***President’s Undergraduate Research Award (PURA) recipient, 2012 Georgia Tech School of ECE Undergraduate Research Award recipient, 2012 Georgia Tech College of Engineering Undergraduate Research Award recipient.***
40. S.Y.Lee, “Inkjet-printed Antennas for Power scavenging applications”, Period: Summer 2011-Fall 2011.
41. W.J.Hwang, “ Circuit design for doublers and scavenging modules”, Period” Summer 2011-Fall 2011.
42. R.Roca, “Inkjet-Printed CNT-based Gas Sensors”, Period: Fall 2010-Spring 2011, GT-ORS, ***IEEE MTT-S Undergraduate/Pre-Graduate Fellowship***
43. S.Elia, “Inkjet-Printed Integrated Wireless Sensor Modules”, Period: Summer 2011-2012, GT-ORS Student.
44. J.T.Brock, “Zero-Power Wireless Sensors”, Period: Fall 2011-2012.
45. S.Wilson, “Investigation of Chemical Mechanisms for the Ultrasensitive Gas Detection”, Period: Summer 2011-2012, GT-ORS Student.
46. Aisha Jackson, Emily Pitts, Eric Rafalovsky, Hans Webster, “Sense for Cents”, Period: 2015-2016, GT-ORS Students
47. Michael Ferrans, Sho Ko, Nyaire Najieb, Period: 2017-2018, GT-ORS Students (PhD Mentor: Ryan Bahr)
48. Will Scott, Denden Mussie, “Printable RF Circuits”, Period: 2018-2019, GT-ORS Students (PhD Mentor: Aline Eid)
49. Daniel Wang, “Printable RF Circuits”, Period:2018-2019, GT-ORS Student (PhD Mentor: Aline Eid) ***TECHCON 2019 Conference 1st place student research presentation award, September 2019, Austin, TX.***
50. Samantha Van Rijs, “3D Printed Lenses for Positioning Applications and Fully Inkjet Printed Dual-Pol Broadband Tuneable FSS Using Origami Eggbox Structures”, Period: 2019-2020, Visiting Undergraduate Researcher.
51. Cynthia Wang, “Peak Finding Algorithm for Real-Time mmWave FMCW Radar and mmID Tag Tracking Systems”, Period: 2021-2022, GT-ORS Student (PhD Mentor: Charles A. Lynch) ***1st place in the Joint University Microelectronics Program (JUMP) Undergraduate Research Initiative (URI) Poster Competition at Semiconductor Research Corporation (SRC) TECHCON 2022, September 2022, Austin, TX.***
52. Hanna Khor, ‘‘Additive Manufactured 6-to-1 Cascaded Wilkinson Power Combiner for 5G Internet of Things Backscattering Communications’’, Period:

2022-2023, GT-ORS Student (PhD Mentor: Charles A. Lynch) ***TECHCON 2023 Conference 1st place student research presentation award, September 2023, Austin, TX.***

III.A.6.2 Undergraduate Capstone/Culminating/Senior Design Students

1. 1.Jorge Juarez, Bryan Dahlqvist, Jesse Baker, George Tzintzarov and Ashley Hrebik, "Raising the Steaks", Fall 2016 **Winner of the ECE price at the Fall 2016 Capstone Design Expo**
2. Bruno Maia Nicolato Correa, Yotam Ghebre, Phillip Yamin, David Shoneye, Brice Nsiangani, "Running-X", Create-X, Spring 2019.
3. Brian Kaplan, Adam Elghor, Soham Gadgil, Vladislav Markov, "Automatic Bartending Cocktail Machine", Create-X, Spring 2019.
4. Austin Allen, Chris Vanchev, Jordan Gross, Alejandro Campos, "PhotoBooth: Print Sprint/Project Title: Increasing the Accessibility and Ease of Smart Phone Photo Capturing and Printing", Create-X/Capstone, Spring 2020.
5. Coleman Alfaro, Henri Bouchard, Thomas James, Sam Lovejoy, Alex McQuilkin, Derek Yu, "TapioBox/Boba Automation", Create-X/Capstone, Spring 2020.
6. Alicia Molina, Amira Tobasi, Justine Powell, Michael Chan, Neha Pasricha, Raj Shiddapur, "Sousie/Smart Kitchen Helper", Create-X/Capstone, Spring 2020.
7. Dalton Crowe, Emily Hasler, Subhachote Pornprinya, Andrew Gauker, Tyler Lizzo, "AN-Dee/Autonomous Nameplate Detection and Capture/International Paper", ECE4723/Spring 2022.
8. Madeline Holda, Vishva Patel, Michael Goldstein, Olivia Plumb, Sangjin Lee, Bill Huang, "Solar Folder", ECE4723/Spring 2022.
9. Khoa Nguyen, John Choi, Hung Nguyen, Cong Wu and Luke Fink, "Hydro Homies", ECE4872/Fall 2022.
10. Chenhao Howard Hu, Lizhe Zhang, Yanlin Bai, Jiacheng Zhang, Boshou Lu, "Parking Deck Navigation/Find Your Spot", ECE4872/Fall 2023.
11. Dylan Frausto, Jason Allen, Kameron Hughes, Logan Starr, "Boeing Boys/Security Assessment", ECE4872/Fall 2023.
12. Kallen Cunningham, Anson Chau, Adrian Poss, Vinh Ly, Oluwatomi Ajayi, "REMBRANT", ECE4872/Spring 2024.

III.B: OTHER TEACHING ACTIVITIES

1. Development of home pages for EE3310 [Electromagnetics II], ECE3065 [Electromagnetic Applications] (http://www.ece.gatech.edu/ etentze/3065f08.html), ECE4390 [Radar and Electromagnetic Sensing], ECE6261 [Numerical Methods for Electromagnetics] and ECE6380 [Numerical Methods for Electromagnetics] (http://www.ece.gatech.edu/ etentze/6380f08.html) Courses. Through the use of these home pages (Summer 1998-Fall 2010), undergraduate and graduate students can obtain previous homeworks and solutions, as well as important information concerning textbook typos and deadlines. Additional examples have been added in .pdf format and an easy-to-use Course Schedule is available.

2. Development of a Preliminary Graphical User Interface (GUI) for the full-wave FDTD modeling of Transmission Lines, Filters and Antennas. This CAD tool could be used as a means for a comprehensive demonstration and the visualization of high-frequency effect in the semester format Electromagnetics courses (ECE3025 [Electromagnetics], ECE3065 [Electromagnetic Applications]).

3. Development of a Beowulf Parallel-Processor Cluster with 8 dual nodes, that is currently extended to 24 dual nodes. This cluster could be used as a testbed for the demonstration

of the principles of code parallelization for the simulations of complex wireless structures (ECE6380 [Numerical Techniques for Electromagnetics]).
4. Development of a new senior-level course on RFID Technologies (ECE4803A) in collaboration with Prof. Durgin. This proposal was approved from the Electromagnetics-TIG and School of ECE and the course has been already taught twice (Spring 2009, Spring 2010).

IV:SCHOLARLY ACCOMPLISHMENTS

IV.A: PUBLISHED BOOKS AND PARTS OF BOOKS

1. L.P.B.Katehi, J.F.Harvey and E.Tentzeris, "Time-Domain Analysis Using Multiresolution Expansions", Chapter in the book: Advances in Computational Electrodynamics, edited by A.Taflove, pp.111-162, Artech House, 1998.
2. E.M.Tentzeris, "Numerical Techniques in RF and Microwave Design", Section for the Book: The RF and Microwave Handbook, edited by M.Golio, pp.8.13-8.34, CRC Press, 2000.
3. J.Laskar, E.M.Tentzeris, J.Schutt-Aine and R.Tummala, "Fundamentals of RF Packaging", Chapter in the book: Fundamentals of Microsystems Packaging, edited by R.Tummala, pp.500-541, McGraw- Hill, 2001.
4. E.M.Tentzeris, "Full-Wave Methods for the Analysis, Modeling and Design of RF and Microwave Geometries", Section for the Book: The RF/Microwave Applications: Challenges and Solutions, edited by M.Golio, pp.18.1-18.32, CRC Press, June 2003.
5. E.M.Tentzeris and N.Bushyager, "Electromagnetics: Time-Domain Techniques," Chapter for the Book: Encyclopedia of RF and Microwave Engineering, edited by K.Chang, Wiley Eds., June 2004.
6. E.M.Tentzeris, K.Lim, S.Pinel and J.Laskar, "RF/Wireless Packaging," Chapter for the Book: Encyclopedia of RF and Microwave Engineering, edited by K.Chang, Wiley Eds., June 2004.
7. J.Goswami, E.M.Tentzeris and N.Bushyager, "Application of Wavelets to Electromagnetics," Chapter for the Book: Encyclopedia of RF and Microwave Engineering, edited by K.Chang, Wiley Eds., June 2004.
8. E.M.Tentzeris and R.L.Li, "Wideband Antennas on Silicon," Chapter for the Book: The Silicon Heterostructure Handbook, edited by J.D.Cressler, pp.1099-1118, Marcel-Dekker Eds., December 2005.
9. N.Bushyager and M.M.Tentzeris, "MRTD (MultiResolution Time-Domain) Method in Electromagnetics", Synthesis Lectures on Computational Electromagnetics, Morgan and Claypool Editions, November 2005.
10. E.M.Tentzeris,L.Yang, A.Rida and S.Basat "RFID: Beyond the Basics", Chapter for the Book: RFID Applied, edited by J.Banks, D.Hanny, M.Pachano and L.Thompson, pp.95-123, J.Wiley and Sons Eds., June 2007.

11. E.M.Tentzeris,L.Yang, A.Rida and S.Basat "RFID: Issues of Security and Privacy", Chapter for the Book: RFID Applied, edited by J.Banks, D.Hanny, M.Pachano and L.Thompson, pp.269-296, J.Wiley and Sons Eds., June 2007.
12. J.-H.Lee and M.M.Tentzeris, "Three-Dimensional Integration and Modeling: A Revolution in RF and Wireless Packaging", Synthesis Lectures on Computational Electromagnetics, Morgan and Claypool Editions, December 2007.
13. E.M.Tentzeris, "Numerical Techniques for the Analysis and Design of RF/Microwave Structures", Section for the Book: RF and Microwave Circuits, Measurements and Modeling, edited by M.Golio, pp.28.1-28.34, CRC Press, January 2008.
14. B.Pan, J.Papapolymerou and E.M.Tentzeris, "MEMS for Antennas", Chapter for the Book: "Modern Antenna Handbook", edited by C.Balanis, pp.829-865, J.Wiley and Sons Eds., July 2008.
15. M.M.Tentzeris, B.Pan and R.L.Li, "Multiband Planar Wire Antennas", Chapter for the Book: "Multiband Integrated Antennas for 4G Terminals", edited by D.Sanchez-Hernandez, pp.53-94, Artech House Eds., August 2008.
16. J.Papapolymerou, M.M.Tentzeris, J.Laskar and S.Bhattacharya, "Radio-Frequency System-on-Package (RF SOP)", Chapter for the Book: Introduction to System-On-Package (SOP): Miniaturization of the Entire System, edited by R.R.Tummala and M.Swaminathan, McGraw-Hill, August 2008.
17. S.Chakraborty, J.Laskar and E.M.Tentzeris, "Mixed-Signal Design and Packaging of RF and Wireless Microsystems", J.Wiley and Sons Eds., January 2009.
18. L.Yang, A.Rida and M.M.Tentzeris, "Design and Development of RFID's and RFID-enabled Sensors on Flexible Low-Cost Substrates", Synthesis Lectures on Computational Electromagnetics, Morgan and Claypool Editions, June 2009.
19. V.Lakafosis, R.Vyas and M.M.Tentzeris, "Enabling Localization Services in Single- and Multihop Wireless Networks", Chapter for the Book: Handbook on Smart Antennas for RFID Systems, edited by N. Karmakar, Wiley Eds., July 2010.
20. A.Rida, L.Yang and M.M.Tentzeris, "RFID-Enabled Sensor Design and Applications", Artech House Publishers, February 2010.
21. M.M.Tentzeris, L.Yang, A.Traille and A.Rida, " "Green" Inkjet-Printed Wireless Sensor Nodes on Low-Cost Paper, Liquid and Flexible Organic Substrates", Chapter for the Book: Electromagnetics and Network Theory and Their Microwave Technology Applications: A Tribute to Peter Russer, edited by S.Lindenmeier and R.Weigel, Springer Eds., July 2011.
22. V.Lakafosis, R.Vyas, C.Mariotti, T.Le and M.M.Tentzeris, "Integrating Tiny RFID and NFC Based Sensors With the Internet", Chapter for the Book: Green RFID Systems, Cambridge University Press, 2014.

23. M.M.Tentzeris, S.Kim, A.Traille, B.S.Cook and T.Le, “Materials for Substrates”, Chapter for the Book: Green RFID Systems, Cambridge University Press, 2014.
24. M.M.Tentzeris, R.Vyas, W.Wei, Y.Kawahara, L.Yang, S.Georgakopoulos, V.Lakafosis, S.Kim, H.Lee, T.Le, S.Mukala and A.Traille, “Power Issues in Biomedical Telemetry”, Chapter in Handbook of Biomedical Telemetry, edited by K.S.Nikita, Wiley-IEEE Press, August 2014.
25. M.M.Tentzeris, S.Kim, V.Lakafosis, H.Lee, T.Le, R.Vyas, S.Mukala and A.Traille, “Advanced Material-Based Sensing Structures”, Chapter in Handbook of Biomedical Telemetry, edited by K.S.Nikita, Wiley-IEEE Press, August 2014.
26. B.S.Cook, B.Tehrani, J.R.Cooper, S.Kim and M.M.Tentzeris, “Inkjet Printing Technology for 2D/3D Flexible Electronic Systems”, Chapter in Handbook of Flexible Organic Electronics, Materials, Manufacturing and Applications, edited by S.Logothetidis, Woodhead Publishing, December 2014.
27. S.Kim, B.Cook, J.Cooper and M.M.Tentzeris, “Inkjet-Printed Artificial Magnetic Conductor (AMC) Plane for Wearable Antennas”, Chapter for the Book: Innovation in Wearable and Flexible Antennas, edited by H.Khaleel, WIT Press, 2015.
28. J.Kimionis, B.Tehrani, J.G.D.Hester, W.Su, J.Bito and M.M.Tentzeris, “Inkjet-Printed Wearable “Smart Skins” “, Chapter for the Book: Electromagnetics of Body-Area Networks: Antennas, Propagation and RF Systems, edited by D.Werner and Z.Jiang, Wiley Eds. 2015.
29. B.K.Tehrani, J.Hester, J.Bito, W.Su, R.Bahr, B.S.Cook and M.M.Tentzeris, “Advanced Antenna Fabrication Processes (MEMS/LTCC/LCP/Printing)”, Chapter for the Book: Handbook of Antenna Technologies, edited by Z.N.Chen, D.Liu, H.Nakano, X.Qing and Th.Zwick, Springer Eds., 2016.
30. Tong-Hong Lin; Ryan A. Bahr; Manos M. Tentzeris, "Additive Manufacturing AiP Designs and Applications", Chapter for the Book “Antenna-in-Package Technology and Applications” , Wiley-IEEE, 2020, pp.267-291, doi: 10.1002/9781119556671.ch9
31. M.M.Tentzeris, A.Eid, T.-H.Lin, J.G.D.Hester, Y.Cui, A.Adeyeye, B.Tehrani and S.A.Nauroze, “Inkjet-/3D-/4D-Printed Nanotechnology-Enabled Radar, Sensing, and RFID Modules for Internet of Things, “Smart Skin,” and “Zero Power” Medical Applications”, Chapter for the Book: “Antenna and Sensor Technologies in Modern Medical Applications”, edited by Y.Rahmat-Samii and E.Topsakal, Wiley – IEEE Press, 2021, pp.399-434, doi: 10.1002/9781119683285.ch11 .
32. A.Georgiadis, A.Collado and M.M.Tentzeris, “Enery Harvesting: Technologies, Systems and Challenges”, Cambridge University Press, 2021.
33. Y.Cui, E.Min Jung, A.Adeyeye, C.Lynch, X.He and M.Tentzeris, “Additively Manufactured RF Devices for 5G, IoT, RFID, WSN and Smart City Applications”, Chapter for the Book: “Nanotechnology for Electronics, Biosensors, Additive Manufacturing and Emerging Systems Application”, edited by C.Broadbridge, F.C.Jain, H.Tang and M.Gherasimova, World Scientific Publishing Company, 2021.
34. Y.Cui, S.A.Nauroze and M.M.Tentzeris, “Origami-inspired 4D tunable RF and wireless structures and modules”, Chapter for the Book: Smart Materials in Additive Manufacturing, Vol.2: 4D Printing mechanics, modeling and advanced

engineering applications", edited by M.Bodaghi and A.Zolfagharian, Elsevier Press, 2022.

35. David A. Sanchez-Hernandez; Steven R. Best; Manos M. Tentzeris; Sungtek Kahng; Gert F. Pedersen, "Smart Antennas for 5G+" , Wiley/IEEE Press, 2024, doi: 10.1002/9781394210510

IV.B: REFEREED PUBLICATIONS [Google Scholar h-factor=86 / 31,032 citations]

IV.B.1. Refereed Journal Publications

1. G.Ponchak, E.Tentzeris and L.P.B.Katehi, "Characterization of Finite Ground Coplanar Waveguide with Narrow Ground Planes", Int. Journ. of Microcircuits and Electronic Packaging, Vol. 20, No. 2, pp. 167-173, Second Quarter, 1997.
2. G.Ponchak, E.Tentzeris and L.P.B.Katehi, "Characterization of the Coupling Between Adjacent Finite Ground Coplanar (FGC) Waveguides", Int. Journ. of Microcircuits and Electronic Packaging, Vol. 20, No. 4, pp. 587-592, Fourth Quarter, 1997.
3. T.P.Budka, E.Tentzeris, S.Waclawik, N.Dib, L.P.B.Katehi and G.M.Rebeiz, "Near-Field Mapping Above a Coupled-Line Filter and a MMIC", Microwave Journal, Vol.41, No.3, pp.94-106, March 1998.
4. E.Tentzeris, M.Krumpholz, N.Dib, J.-G.Yook and L.P.B.Katehi, "FDTD Characterization of Waveguide Probe Structures", IEEE Transactions on Microwave Theory and Techniques, Vol.46, No.10, pp.1452-1460, October 1998.
5. R.L.Robertson, E.Tentzeris and L.P.B.Katehi, "Modelling of Dielectric-Loaded Cavities using MRTD", Int. Journal of Numerical Modeling, Special Issue on Wavelets in Electromagnetics, Vol.11, pp.55-68, 1998.
6. E.Tentzeris, J.Harvey and L.P.B.Katehi, "Time Adaptive Time-Domain Techniques for the Design of Microwave Circuits", IEEE Microwave and Guided Wave Letters, Vol.9, No.3, pp.96-98, 1999.
7. E.Tentzeris, R.Robertson, J.Harvey and L.P.B.Katehi, "Stability and Dispersion Analysis of Battle-Lemarie Based MRTD Schemes", IEEE Transactions on Microwave Theory and Techniques, Vol.47, No.7, pp.1004-1013, July 1999.
8. E.Tentzeris, R.Robertson, J.Harvey and L.P.B.Katehi, "Application of the PML Absorber to MRTD Battle-Lemarie Schemes", IEEE Transactions on Antennas and Propagation, Vol.47, No.11, pp.1709-1715, November 1999.
9. D.Staciulescu, J.Laskar and E.M.Tentzeris, "Design Rule Development for Microwave Flip-Chip Applications", IEEE Transactions on Microwave Theory and Techniques, Vol.48, No.9, pp.1476-1481, September 2000.
10. A.Sutono, G.Cafaro, J.Laskar and M.Tentzeris, "Experimental modeling, repeatability investigation and optimization of microwave bond wire interconnects", IEEE Transactions on Advanced Packaging, Vol.24, No.2, pp.595-603, November 2001.

11. M.Tentzeris, “3G/4G Wireless Systems: Challenges of the Future” (in Greek), ”Pyrforos” National Technical Review of National Technical University of Athens, Vol.12 (2001), No.4, pp.24-40, November 2001.
12. E.Tentzeris, A.Cangellaris, L.P.B.Katehi and J.Harvey “Multiresolution Time-Domain (MRTD) Adaptive Schemes Using Arbitrary Resolutions of Wavelets”, IEEE Transactions on Microwave Theory and Techniques, Vol.50, No.2, pp.501-516, February 2002.
13. K.Lim, S.Pinel, M.Davis, A.Sutono, C.-H.Lee, D.Heo, A.Obateyinbo, J.Laskar, E.M.Tentzeris and R.Tummala, “RF-System-On-Package (SOP) for Wireless Communications”, IEEE Microwave Magazine, Vol.3, No.1, pp.88-99, March 2002.
14. N.Bushyager, B.McGarvey and E.M.Tentzeris, “Introduction of an Adaptive Modeling Technique for the Simulation of RF Structures Requiring the Coupling of Maxwell’s, Mechanical and Solid-State Equations”, Applied Computational Electromagnetics Society Journal, Vol.17, No.1, pp.104-111, March 2002.
15. M.F.Davis, A.Sutono, S.-W.Yoon, S.Mandal, N.Bushyager, C.-H.Lee, L.Lim, S.Pinel, M.Maeng, A.Obatoyinbo, S.Chakraborty, J.Laskar, M.Tentzeris, T.Nonaka and R.R.Tummala, “Integrated RF Architectures in Fully-Organic SOP Technology”, IEEE Transactions on Advanced Packaging, Vol.25, No.2, pp.136-142, May 2002.
16. R.Li, E.M.Tentzeris, J.Laskar, V.F.Fusco and R.Cahill,“Broadband Loop Antenna for DCS-1800/IMT-2000 Mobile Phone Handsets”, IEEE Microwave and Wireless Components Letters, Vol.12, No.8, pp.305-307, August 2002.
17. G.Ponchak and E.M.Tentzeris, “Finite Ground Coplanar Waveguide (FGC) Low Loss, Low Coupling 90-Degree Crossover Junctions”, IEEE Transactions on Advanced Packaging, Vol.25 No.3, pp.385-392, August 2002.
18. C.H.Lee, A.Sutono, S.Han, K.Lim, S.Pinel, J.Laskar and E.M.Tentzeris, “A Compact LTCC-based Ku-band Transmitter Module”, IEEE Transactions of Advanced Packaging, Vol.25 No.3, pp.374-384, August 2002.
19. D.Staiculescu, J.Laskar and E.M.Tentzeris, “Design of Experiments Technique (DOE) for Microwave/Millimeter Wave Flip-Chip Optimization”, International Journal of Numerical Modeling, Vol.16, pp.97-103, January 2003.
20. G.Zheng, J.Papapolymerou and M.M.Tentzeris, “Wideband Coplanar Waveguide RF Probe Pad to Microstrip Transitions without Via Holes”, IEEE Microwave and Wireless Components Letters, pp.544-546, December 2003.
21. G.E.Ponchak, M.M.Tentzeris and J.Papapolymerou, “Coupling Between Microstrip Lines Embedded in Polyimide Layers for 3D-MMIC’s on Si”, IEE Proceedings, H Microwaves, Antennas, and Propagation, Vol. 150, No. 5, pp.344-350, October 2003.
22. K.Kawano, N.Miura, M.Kuroda and M.M.Tentzeris, “A Novel Numerical Approach for the Analysis of MEMS-Based Variable Capacitors with Moving Metallic Plates”-

in Japanese, The IEICE Transaction on Electronics, Vol. J87-C, No.1, pp32-38, January 2004.

23. R.L.Li, G.DeJean, J.Laskar and M.M.Tentzeris, “Development and Analysis of a Folded Shorted-Patch Antenna with Reduced Size”, IEEE Transactions on Antennas and Propagation, Vol.52, No.2, pp.555-562, February 2004.
24. R.L.Li, G.DeJean, J.Papapolymerou, J.Laskar and M.M.Tentzeris, “FDTD Analysis of Microstrip Patch Antennas and Arrays on High Dielectric-Constant Substrate Surrounded by a Soft-and-Hard Surface”, IEEE Transactions on Magnetics, Vol.40, No.2, pp.1444-1447, March 2004.
25. M.Kuroda, N.Miura and M.M.Tentzeris, “A Novel Numerical Approach for the Analysis of 2D MEMS-Based Variable Capacitors Including the Effect of Arbitrary Motions”, Applied Computational Electromagnetics (ACES) Society Journal, Vol.19, No.1b, pp.133-138, March 2004.
26. J.Papapolymerou, G.Ponchak, E.Dalton, A.Bacon and M.M.Tentzeris, “Crosstalk Between Finite Ground Coplanar Waveguides over Polyimide Layers for 3D-MMIC’s on Si Substrates”, IEEE Transactions on Microwave Theory and Techniques, Vol.52, No.4, pp.1292-1301, April 2004.
27. D.C.Thompson, O.Tantot, H.Jallageas, G.E.Ponchak, M.M.Tentzeris and J.Papapolymerou, “Characterization of Liquid Crystal Polymer (LCP) Material and Transmission Lines on LCP Substrates from 30-110 GHz”, IEEE Transactions on Microwave Theory and Techniques, Vol.52, No.4, pp.1343-1352, April 2004.
28. M.M.Tentzeris, J.Laskar, J.Papapolymerou, D.Thompson, S.Pinel, R.L.Li, J.H.Lee, G.DeJean, S.Sarkar, R.Pratap, R.Bairavasubramanian and N.Papageorgiou, “RF SoP for Multi-band RF and Millimeter-wave Systems”, Advanced Packaging Magazine, pp.15-16, April 2004.
29. N.Bushyager, E.Dalton and M.M.Tentzeris, “Modeling of Complex RF/Wireless Structures Using Computationally Optimized Time-Domain Techniques”, International Journal of Numerical Modeling, Vol.17, No.3, pp.223-236, May 2004.
30. R.R.Tummala, M.Swaminathan, M.M.Tentzeris, J.Laskar, G.-K.Chang, S.Sitaraman, D.Keezer, D.Guidotti, Z.Huang, K.Lim, L.Wan, S.K.Bhattacharya, V.Sundaram, F.Liu and P.M.Raj, “The SOP for Miniaturized, Mixed-Signal Computing, Communication and Consumer Systems of the Next Decade”, IEEE Transactions on Advanced Packaging, Vol.27 No.2, pp.250-267, May 2004.
31. M.M.Tentzeris, J.Laskar, J.Papapolymerou, S.Pinel, V.Palazzari, R.Li, G.DeJean, N.Papageorgiou, D.Thompson, R.Bairavasubramanian, S.Sarkar and J.-H.Lee, “3D Integrated RF and Millimeter-Wave Functions and Modules Using Liquid Crystal Polymer (LCP) System-on-Package Technology”, IEEE Transactions on Advanced Packaging, Vol.27 No.2, pp.332-340, May 2004.
32. J.-H.Lee, N.Bushyager and M.M.Tentzeris, “Comparative Evaluation of DSP Techniques Coupled with EM Time-Domain Simulators for the Efficient Modeling and Design of Highly Resonant RF-MEMS Structures”, IEEE Microwave and Wireless Components Letters, Vol.14, No.7, pp.361-363, July 2004.

33. R.L.Li, G.DeJean, K.Lim, M.M.Tentzeris and J.Laskar, “Design of Compact Stacked-Patch Antennas in LTCC Multilayer Packaging Modules for Wireless Applications”, IEEE Transactions on Advanced Packaging, Vol.27, No.4, pp.581-589, November 2004.
34. R.L.Li, G.DeJean, J.Papapolymerou, J.Laskar and M.M.Tentzeris, “Radiation-Pattern Improvement of Patch Antennas on a Large-Size Substrate Using a Compact Soft Surface Structure and its Realization on LTCC Multilayer Technology”, IEEE Transactions on Antennas and Propagation, Vol.53, No.1, pp.200-208, January 2005.
35. G.DeJean, R.Bairavasubramanian, D.Thompson, G.E.Ponchak, M.M.Tentzeris and J.Papapolymerou, “Liquid Crystal Polymer (LCP): A New Organic Material for the Development of Multilayer Dual Frequency/Dual Polarization Flexible Antenna Arrays”, IEEE Antennas and Wireless Propagation Letters, Vol.4, No.1, pp.22-26, January 2005.
36. R.L.Li, D.Thompson, M.M.Tentzeris, J.Laskar and J.Papapolymerou, “Development of a Wideband Short Backfire Antenna Excited by an Unbalance-Fed H-Shaped Slot”, IEEE Transactions on Antennas and Propagation, Vol.53, No.2, pp.662-671, February 2005.
37. G.E.Ponchak, J.Papapolymerou and M.M.Tentzeris, “Excitation of Coupled Slotline Mode in Finite-Ground CPW with Unequal Ground-Plane Widths”, IEEE Transactions on Microwave Theory and Techniques, Vol.53, No.2, pp.713-717, February 2005.
38. V.Palazzari, S.Pinel, J.Laskar, L.Roselli and M.M.Tentzeris, “Asymmetrical Dual-Band WLAN Filter in Liquid Crystal Polymer System-on-Package Technology”, IEEE Microwave and Wireless Components Letters, Vol.15, No.3, pp.165-167, March 2005.
39. G.E.Ponchak, E.Dalton, M.M.Tentzeris and J.Papapolymerou, “Coupling Between Microstrip Lines with Finite Width Ground Plane Embedded in Thin Film Circuits”, IEEE Transactions on Advanced Packaging, Vol.28, No.2, pp.320-327, May 2005.
40. D.Staiculescu, N.Bushyager, A.Obatoyinbo, L.Martin and M.M.Tentzeris, “Design and Optimization of 3D Compact Stripline and Microstrip Bluetooth/WLAN Balun Architectures using the Design of Experiments Technique”, IEEE Transactions on Antennas and Propagation, Vol.53, No.5, pp.1805-1812, May 2005.
41. J.-H.Lee, G.DeJean, S.Sarkar, S.Pinel, K.Lim, J.Papapolymerou, J.Laskar and M.M.Tentzeris, “Highly Integrated Millimeter-Wave Passive Components Using 3-D LTCC System-on-Package (SOP) Technology”, IEEE Transactions on Microwave Theory and Techniques, Vol.53, No.6, pp.2220-2229, June 2005.
42. J.-H.Lee, L.Marcaccioli, G.DeJean, C.Lugo, S.Pinel, J.Papapolymerou, J.Laskar, R.Sorrentino and M.M.Tentzeris, “Advanced System-on-Package (SOP) Front-End Passive Solutions for RF and Millimeter-Wave Wireless Systems”, European Microwave Association Magazine, Vol.1, No.2, pp.130-139, June 2005.

43. R.L.Li, D.Thompson, J.Papapolymerou, J.Laskar and M.M.Tentzeris, "A New Excitation Technique for Wideband Short Backfire Antennas", IEEE Transactions on Antennas and Propagation, Vol.53, No.7, pp.2313-2320, July 2005.
44. N.Bushyager, J.Papapolymerou and M.M.Tentzeris, "A Composite-Cell Multiresolution Time-Domain Technique for the Design of Antenna Systems Including Electromagnetic Band Gap and Via-Array Structures", IEEE Transactions on Antennas and Propagation, Vol.53, No.8, Part 2, pp.2700-2710, August 2005.
45. I.-K.Kim, N.Kingsley, M.Morton, R.Bairavasubramanian, J.Papapolymerou, M.M.Tentzeris and J.-G.Yook, "Fractal Shaped Microstrip Coupled Line Bandpass Filters for Suppression of the 2nd Harmonic", IEEE Transactions on Microwave Theory and Techniques, Vol.53, No.9, pp.2943-2948, September 2005.
46. D.C.Thompson, J.Papapolymerou and M.M.Tentzeris, "High Temperature Dielectric Stability of Liquid Crystal Polymer at mm-Wave Frequencies", IEEE Microwave and Wireless Components Letters, Vol.15, No.9, pp.561-563, September 2005.
47. R.L.Li, J.Laskar and M.M.Tentzeris, "Wideband Probe-Fed Circularly Polarized Circular Loop Antennas", Electronics Letters, Vol.41, No.18, pp.997-999, September 2005.
48. A.Raghavan, E.Gebara, M.M.Tentzeris and J.Laskar, "Analysis and Design of an Interference Canceller for Collocated Radios", IEEE Transactions on Microwave Theory and Techniques, Vol.53, No.11, pp.3498-3508, November 2005.
49. R.L.Li, G.DeJean, J.Laskar and M.M.Tentzeris, "Investigation of Circularly Polarized Loop Antennas with a Parasitic Element for Bandwidth Enhancement", IEEE Transactions on Antennas and Propagation, Vol.53, No.12, pp.3930-3939, December 2005.
50. R.L.Li, N.A.Bushyager, J.Laskar and M.M.Tentzeris, "Determination of Reactance Loading for Circularly-Polarized Circular-Loop Antennas with a Uniform Travelling-Wave Current Distribution", IEEE Transactions on Antennas and Propagation, Vol.53, No.12, pp.3920-3929, December 2005.
51. J.-H.Lee, S.Pinel, J.Papapolymerou, J.Laskar and M.M.Tentzeris, "Low-Loss LTCC Cavity Filters Using System-on-Package Technology at 60 GHz", IEEE Transactions on Microwave Theory and Techniques, Vol.53, No.12, pp.3817-3824, December 2005.
52. J.-H.Lee, B.G.Perumana, S.Nikolaou, Y. Park, R. Mukhopadhay, C.-H. Lee, K. Lim, J.Laskar and M.M.Tentzeris, "Advanced Integrated RF Front-End Solutions for Low-Power and UWB Wireless Systems", European Microwave Association Magazine, Vol.1, No.4, pp.272-280, December 2005.
53. R.L.Li, J.Laskar and M.M.Tentzeris, "Broadband Circularly Polarized Rectangular Loop Antenna with Impedance Matching", IEEE Microwave and Wireless Components Letters, Vol.16, No.1, pp.52-54, January 2006.

54. S.Nikolaou, R.Bairavasubramanian, C.Lugo, I.Carasquillo, D.Thompson, G.E.Ponchak, J.Papapolymerou, and M.M.Tentzeris, “Pattern and Frequency Reconfigurable Annular Slot Antenna using PIN Diodes”, IEEE Transactions on Antennas and Propagation, Vol.54, No.2-I, pp.439-448, February 2006.
55. R.L.Li, D.Thompson, J.Papapolymerou, J.Laskar and M.M.Tentzeris, “A Circularly Polarized Short Backfire Antenna Excited by an Unbalance-Fed Cross Aperture”, IEEE Transactions on Antennas and Propagation, Vol.54, No.3, pp.852-859, March 2006.
56. S.Nikolaou, G.Ponchak, J.Papapolymerou, and M.M.Tentzeris, “Conformal Double Exponentially Tapered Slot Antenna (DETSA) on LCP for UWB Applications”, IEEE Transactions on Antennas and Propagation, Vol.54, No.6, pp.1663-1669, June 2006.
57. R.L.Li, S.Basat, A.Traille, J.Laskar and M.M.Tentzeris, “Development of Wideband Circularly Polarized Square- and Rectangular-Loop Antennas”, IEE Proc. Microwave, Antennas and Propagation, Vol.153, No.3, pp.293-300, June 2006.
58. J.-H.Lee, N.Kidera, G.DeJean, S.Pinel, J.Laskar, and M.M.Tentzeris, “A V-Band Front-End with 3D Integrated Cavity Filters/Duplexers and Antenna in LTCC Technologies”, IEEE Transactions on Microwave Theory and Techniques, Vol.54, No.7, pp.2925-2936, July 2006.
59. D.C.Thompson, M.M.Tentzeris and J.Papapolymerou, “Packaging of MMIC’s in Multilayer LCP Substrates”, IEEE Microwave and Wireless Components Letters, Vol.16, No.7, pp.410-412, July 2006.
60. I.-K.Kim, N.Kidera, S.Pinel, J.Papapolymerou, J.Laskar, J.-G.Yook, and M.M.Tentzeris, “Linear Tapered Cavity-Backed Slot Antenna for millimeter-wave LTCC Modules”, IEEE Antennas and Wireless Propagation Letters, Vol.5, pp.175-178, December 2006.
61. R.L.Li, A.Traille, J.Laskar and M.M.Tentzeris, “Bandwidth and Gain Improvement of a Circularly Polarized Dual-Rhombic Loop Antenna”, IEEE Antennas and Wireless Propagation Letters, Vol.5, pp.84-87, December 2006.
62. B.Pan, Y.-K.Yoon, G.E.Ponchak, M.G.Allen, J.Papapolymerou and M.M.Tentzeris, “Analysis and Characterization of a High Performance Ka-Band Surface Micromachined Elevated Patch Antenna”, IEEE Antennas and Wireless Propagation Letters, Vol.5, pp.511-514, December 2006.
63. I.-K.Kim, N.Kingsley, M.A.Morton, S.Pinel, J.Papapolymerou, M.M.Tentzeris, J.Laskar, J.-G.Yook, “Koch Fractal Shape Microstrip Bandpass Filters on High Resistivity Silicon for the Suppression of the 2nd Harmonic” [Abstract in Korean], Journal of the Korean Electromagnetic Engineering Society, Vol.6, No.4, December 2006.
64. J.-H.Lee, N.Kidera, S.Pinel, J.Papapolymerou, J.Laskar, and M.M.Tentzeris, “Comparative Study of Feeding Techniques for 3D Cavity Resonators”, IEEE Transactions on Advanced Packaging, Vol.30, No.1, pp.115-123, February 2007.

65. G.DeJean and M.M.Tentzeris, “A New High-Gain Microstrip Yagi Antenna Array with a High Front-to-Back (F/B) Ratio for WLAN and Millimeter-Wave Applications”, IEEE Transactions on Antennas and Propagation, Vol.55, No.2, pp.298-304, February 2007.
66. C.You, M.M.Tentzeris and W.Hwang, “Multilayer Effects on Microstrip Antennas for their Integration with Mechanical Structures”, IEEE Transactions on Antennas and Propagation, Vol.55, No.4, pp.1051-1058, April 2007.
67. R.L.Li, B.Pan, J.Laskar and M.M.Tentzeris, “A Compact Broadband Planar Antenna for GPS, DCS-1800, IMT-2000, and WLAN Applications”, IEEE Antennas and Wireless Propagation Letters, Vol.6, pp.25-27, April 2007.
68. J.H.Lee, N.Kidera, S.Pinel, J.Laskar and M.M.Tentzeris, “Fully Integrated Passive Front-End Solutions for a V-band LTCC Wireless Systems”, IEEE Antennas and Wireless Propagation Letters, Vol.6, pp.285-288, April 2007.
69. G.DeJean, T.T.Thai, S.Nikolaou and M.M.Tentzeris, “Design and Analysis of Microstrip Bi-Yagi and Quad-Yagi Antenna Arrays for WLAN Applications”, IEEE Antennas and Wireless Propagation Letters, Vol.6, pp.244-248, April 2007.
70. R.L.Li, B.Pan, J.Papapolymerou, J.Laskar, M.M.Tentzeris, “Broadand Low-profile Antennas for Wireless Applications”, IET Microwaves, Antennas and Propagation, Vol.1, No.2, pp.396-400, April 2007.
71. R.L.Li, B.Pan, J.Laskar, M.M.Tentzeris, “A Very-Low-Profile Broadband Planar Antenna for DCS-1800 and IMT-2000 Applications”, Microwave and Optical Technology Letters, Wiley Eds., Vol.49, No.7, pp.1679-1681, July 2007.
72. R.L.Li, B.Pan, J.Laskar, M.M.Tentzeris, “A Low-Profile Broadband Planar Antenna for DVB-H Terminals”, Microwave and Optical Technology Letters, Wiley Eds., Vol.49, No.7, pp.1630-1633, July 2007.
73. R.L.Li, G.DeJean, M.M.Tentzeris and J.Laskar, “Development of Multi-Broadband Planar Wire Antennas for Wireless Applications”, Wireless Personal Communications, Springer Eds., Vol.42, pp.1-11, 2007.
74. B.Pan, Y.Li, M.M.Tentzeris and J.Papapolymerou, “A High-Q Millimeter-Wave Air-Lifted Cavity Resonator on Lossy Substrates”, IEEE Microwave and Wireless Components Letters, Vol.17, No.8, pp.571-573, August 2007.
75. D.C.Thompson, M.M.Tentzeris and J.Papapolymerou, “Experimental Analysis of the Water Absorption Effects on RF/mm-wave Active/Passive Circuits Packaged in Multilayer Organic Substrates”, IEEE Transactions on Advanced Packaging, Vol.30, No.3, pp.pp.551-557, August 2007.
76. J.-H.Lee, S.Pinel, J.Laskar, and M.M.Tentzeris, “Design and Development of Advanced Cavity-Based Dual-Mode Filters Using Low-Temperature Co-Fired Ceramic Technology for V-band Gigabit Wireless Systems”, IEEE Transactions on Microwave Theory and Techniques, Vol.55, No.9, pp.1869-1879, September 2007.

77. G.DeJean and M.M.Tentzeris, “The Application of Lumped Element Equivalent Circuits Approach to the Design of Single-Port Microstrip Antennas”, IEEE Transactions on Antennas and Propagation, Vol.55, No.9, pp.2468-2472, September 2007.
78. N.Kingsley, D.E.Anagnostou, M.M.Tentzeris and J.Papapolymerou, “RF MEMS Sequentially Reconfigurable Sierpinski Antenna on a Flexible Organic Substrate With Novel DC-Biasing Tuning”, IEEE Journal of Microelectromechanical Systems, Vol.16, No.5, pp.1185-1192, October 2007.
79. S.Horst, R.Bairavasubramanian, M.M.Tentzeris and J.Papapolymerou, “Modified Wilkinson Power Dividers for Millimeter-Wave Integrated Circuits”, IEEE Transactions on Microwave Theory and Techniques, Vol.55, No.11, pp.2439-2446, November 2007.
80. Y.Li, B.Pan, C.Lugo, M.M.Tentzeris and J.Papapolymerou, “Design and Characterization of a W-Band Transition from CPW Feeding Lines”, IEEE Transactions on Microwave Theory and Techniques, Vol.55, No.12, Part 2, pp.2902-2910, December 2007.
81. L.Yang, A.Rida, R.Vyas and M.M.Tentzeris, “RFID Tag and RF Structures on Paper Substrates using Inkjet-Printing Technology”, IEEE Transactions on Microwave Theory and Techniques, Vol.55, No.12, Part 2, pp.2894-2901, December 2007.
82. A.Rida, L.Yang, R.Vyas, D.Staiculescu and M.M.Tentzeris, “Novel Miniaturized Inkjet-printed Paper-Based UHF Components for RFID Applications”, European Microwave Association Magazine, Special Issue on RFID’s, Vol.3, No.4, pp.336-340, December 2007.
83. R.L.Li, B.Pan, A.Traille, J.Papapolymerou, J.Laskar and M.M.Tentzeris, “Development of a Cavity-Backed Broadband Circularly Polarized Slot/Strip Loop Antenna with a Simple Feeding Structure”, IEEE Transactions on Antennas and Propagation, Vol.56, No.2, pp.312-318, February 2008.
84. B.Kim, B.Pan, S.Nikolaou, Y.-S.Kim, J.Papapolymerou and M.M.Tentzeris, “A Novel Single-Feed Circular Microstrip Antenna with Reconfigurable Polarization Capability”, IEEE Transactions on Antennas and Propagation, Vol.56, No.3, pp.630-638, March 2008.
85. R.L.Li, B.Pan, J.Laskar and M.M.Tentzeris, “A Novel Low-Profile Broadband Dual-Frequency Planar Antenna for Wireless Handsets”, IEEE Transactions on Antennas and Propagation, Vol.56, No.4, pp.1155-1162, April 2008.
86. B.Pan, Y.Li, M.M.Tentzeris and J.Papapolymerou, “Surface Micromachining Polymer-Core-Conductor Approach for High-Performance Millimeter-Wave Air-Cavity Filters Integration”, IEEE Transactions on Antennas and Propagation, Vol.56, No.4, pp.959-970, April 2008.
87. T.T.Thai, G.R.DeJean and M.M.Tentzeris, “Design and Development of a Novel Compact Soft-Surface Structure for the Front-to-Back Ratio Improvement and Size

Reduction of a Microstrip Yagi Array Antenna", IEEE Antennas and Wireless Propagation Letters, Vol.7, pp.369-373, June 2008.

88. D.E.Anagnostou, J.Papapolymerou, M.M.Tentzeris and C.G.Christodoulou, "A Printed Log-Periodic Koch-Dipole Array (LPKDA)", IEEE Antennas and Wireless Propagation Letters, Vol.7, pp.456-460, June 2008
89. B.Pan, Y.Li, G.E.Ponchak, M.M.Tentzeris and J.Papapolymerou, "A Low-Loss Substrate-Independent Approach for 60-GHz Transceiver Front-End Integration Using Micromachining Technologies", IEEE Transactions on Microwave Theory and Techniques, Vol.56, No.12-1, pp.2779-2788, December 2008.
90. J.Laskar and M.M.Tentzeris, "Guest Editorial", IEEE Transactions on Microwave Theory and Techniques, Vol.56, No.12-2, pp.3015-3015, December 2008.
91. L.Yang, L.J.Martin, D.Staiculescu, C.P.Wong and M.M.Tentzeris, "Conformal Magnetic Composite RFID for Wearable RF and Bio-Monitoring Applications", IEEE Transactions on Microwave Theory and Techniques, Vol.56, No.12-2, pp.3223-3230, December 2008.
92. B.Pan, Y.Li, G.E.Ponchak, J.Papapolymerou and M.M.Tentzeris, "A 60-GHz CPW-Fed High-Gain and Broadband Integrated Horn Antenna", IEEE Transactions on Antennas and Propagation, Vol.57, No.4-II, pp.1050-1056, April 2009.
93. M.M.Tentzeris, H.Witschnig and E.Leitgeb, "Guest Editorial – Special Issue on RFID Technologies", IEEE Transactions on Microwave Theory and Techniques, Vol.57, No.5-II, pp.1265-1267, May 2009.
94. R.Vyas, V.Lakafosis, A.Rida, N.Chaisilwattana, S.Travis, J.Pan and M.M.Tentzeris, "Paper-Based RFID-Enabled Wireless Platforms for Sensing Applications", IEEE Transactions on Microwave Theory and techniques, Vol.57, No.5-II, pp.1370-1382, May 2009.
95. A.Rida, L.Yang, R.Vyas and M.M.Tentzeris, "Conductive Inkjet-Printed Antennas on Flexible Low-Cost Paper-Based Substrates for RFID and WSN Applications", IEEE Antennas and Propagation Magazine, Vol.51, No.3, pp.13-23, June 2009.
96. A.Rida, L.Yang, R.Vyas, D.Staiculescu and M.M.Tentzeris, "UHF RFID Antennas on Ultra Low-Cost Paper-Based Substrates", accepted for publication to the International Journal on Wireless and Optical Communications on 5/3/08.
97. L.Martin, L.Yang, D.Staiculescu, H.Li, S.L.Ooi, C.P.Wong and M.M.Tentzeris, "Investigation of the Impact of Magnetic Permeability and Loss of Magnetic Composite Materials on RFID Miniaturization for Conformal Medical Applications", accepted for publication to the International Journal on Numerical Modeling on 5/11/08.
98. L.Yang, R.Zhang, D.Staiculescu, C.P.Wong and M.M.Tentzeris, "A Novel Conformal RFID-Enabled Module Utilizing Inkjet-Printed Antennas and Carbon Nanotubes for Gas Detection Applications", IEEE Antennas and Wireless

Propagation Letters, Vol.8, pp.653-656, June 2009. ***2010 IEEE Antennas and Propagation Society Piergiorgio L. E. Uslenghi Letters Prize Paper Award***

99. X.He, S.Hong, H.Xiong, Q.Zhang and M.M.Tentzeris, "Design of a Novel High-Gain Dual-Band Antenna for WLAN Applications", IEEE Antennas and Wireless Propagation Letters, Vol.8, pp.798-801, June 2009.
100. R.L.Li, T.Wu, B.Pan, K.Lim, J.Laskar and M.M.Tentzeris, "Equivalent-Circuit Analysis of a Broadband Printed Dipole with Adjusted Integrated Balun and an Array for Base Station Applications', IEEE Transactions on Antennas and Propagation, Vol.57, No.7, pp.2180-2184, July 2009.
101. S.Nikolaou, N.D.Kingsley, G.E.Ponchak, J.Papapolymerou and M.M.Tentzeris, "UWB Elliptical Monopoles with a Reconfigurable Band Notch Using MEMS Switches Activated without Bias Lines", IEEE Transactions on Antennas and Propagation, Vol.57, No.8, pp.2242-2251, August 2009.
102. C.M.Kruesi, R.J.Vyas and M.M.Tentzeris, "Design and Development of a Novel 3D Cubic Antenna for Wireless Sensor Networks (WSNs) and RFID Applications", IEEE Transactions on Antennas and Propagation, Vol.57, No.10-II, pp.3293-3299, October 2009.
103. A.H.Rida, L.Yang, S.Basat, A.Ferrer-Vidal, S.Nikolaou and M.M.Tentzeris, "Design, Development and Integration of Novel Antennas for Miniaturized UHF RFID Tags", IEEE Transactions on Antennas and Propagation, Vol.57, No.11, pp.3450-3457, November 2009.
104. L.J.Martin, S.OOi, D.Staiculescu, M.D.Hill, C.P.Wong and M.M.Tentzeris, "Effect of Permittivity and Permeability of a Flexible Magnetic Composite Material on the Performance and miniaturization Capability of Planar Antennas for RFID and Wearable Wireless Applications", IEEE Transactions on Components and Pakaging Technologies, Vol.32, No.4, pp.849-858, December 2009. ***2009 IEEE Transactions on Components and Packaging Technologies Best Paper Award***
105. V.Lakafosis and M.M.Tentzeris, "From Single- to Multi-hop: The Status of Wireless Localization', IEEE Microwave Magazine, Vol.10, No.7-Supplement, pp.34-41, December 2009.
106. T.Wu, R.L.Li, S.Y.Eom, S.S.Myoung, K.Lim, J.Laskar, S.I.Jeon and M.M.Tentzeris, "Switchable Quad-band Antennas for Cognitive Radio Base Station Applications", IEEE Transactions on Antennas and Propagation, Vol.58, No.5, pp.1468-1476, May 2010.
107. V.Lakafosis, A.Rida, R.Vyas, L.Yang, S.Nikolaou and M.M.Tentzeris, "Progress Towards the First Wireless Sensor Networks Consisting of Inkjet-Printed Paper-Based RFID-Enabled Sensor Tags", Proceedings of the IEEE, Vol.98, No.9, pp.1601-1609, September 2010.
108. A.Rida, A.Margomenos, J.S.Lee, P.Schmalenberg, S.Nikolaou and M.M.Tentzeris, "Integrated Wideband 2D and 3D Transitions for Millimeter-Wave

RF Front-Ends", IEEE Antennas and Wireless Propagation Letters (AWPL), Vol.9, pp.1080-1083, June 2010.

109. Y.Qi, J.Miao, S.Hong and M.M.Tentzeris, "Characterization of Extraordinary Transmission for a Single Subwavelength Slit: A Fabry-Perot-Like Formula Model", IEEE Transactions on Microwave Theory and Techniques, Vol.58, No.12-1, pp.3657-3665, December 2010.

110. V.Lakafosis, A.Traille, H.Lee, E.Gebara, M.M.Tentzeris, G.R.DeJean and D.Kirovski, "RF Fingerprinting Physical Objects for Anticounterfeiting Applications", IEEE Transactions on Microwave Theory and Techniques, Vol.59, No.2, pp.504-514, February 2011.

111. F.Alimenti, M.Virili, G.Orecchini, P.Mezzanotte, V.Palazzari, M.M.Tentzeris and L.Roselli, "A New Contactless Assembly Method for Paper Substrate Antennas and UHF RFID Chips", IEEE Transactions on Microwave Theory and Techniques, Vol.59, No.3, pp.627-637, March 2011.

112. T.T.Thai, L.Yang, G.DeJean and M.M.Tentzeris, "Nanotechnology Enables Wireless Gas Sensing", IEEE Microwave Magazine, Vol.12, No.4, pp.84-95, April 2011.

113. T.Wu, R.L.Li and M.M.Tentzeris, "A Scalable Solar Antenna for Autonomous Integrated Wireless Sensor Nodes", IEEE Antennas and Wireless Propagation Letters (AWPL), Vol.10, pp.510-513, June 2011.

114. G.Shaker, S.Safavi-Naeini, N.Sangary and M.M.Tentzeris, " Inkjet Printing of Ultrawideband (UWB) Antennas on Paper-Based Substrates", IEEE Antennas and Wireless Propagation Letters (AWPL), Vol.10, pp.111-114, June 2011.

115. G.Orecchini, F.Alimenti, V.Palazzari, A.Rida, M.M.Tentzeris and L.Roselli, "Design and Fabrication of Ultra-Low-Cost Radio Frequency Identification Antennas and Tags Exploiting Paper Substrates and Inkjet Printing Technology", IET Microwaves, Antennas and Propagation, Vol.5, No.8, pp.993-1001, August 2011.

116. T.Zhang, R.L.Li, G.Jin, G.Wei and M.M.Tentzeris, "A Novel Multiband Planar Antenna for GSM/UMTS/LTE/Zigbee/RFID Mobile Devices, IEEE Transactions on Antennas and Propagation, Vol.59, No.11, pp.4209-4214, November 2011.

117. C.Occhiuzzi, A.Rida, G.Marrocco and M.M.Tentzeris, " A Novel RFID Passive Gas Sensor Integrating Carbon Nanotubes", IEEE Transactions on Microwave Theory and Techniques, Vol.59, No.10-II, pp.2674-2684, October 2011, **Special Issue on Nanotechnology**.

118. H.Lee, G.Shaker, K.Naishadham, X.Song, M.McKinley, B.Wagner and M.M.Tentzeris,, "Carbon-Nanotube Loaded Antenna-Based Ammonia Gas Sensor", IEEE Transactions on Microwave Theory and Techniques, Vol.59, No.10-II, pp.2665-2673, October 2011, **Special Issue on Nanotechnology**.

119. S.T.Kim, J.Choi, K.Chae, S.Beck, S.-H.Kim, F.Bien, C.-H.Lee, K.Lim, J.Laskar and M.M.Tentzeris, "A Non-Interruptive Link-Variation Monitoring Circuit for Wireless Sensor Applications", IEEE Microwave and Wireless Components Letters, Vol.21, No.12, pp.691-693, December 2011.
120. R.Vyas, V.Lakafosis, H.Lee, G.Shaker, L.Yang, G.Orecchini, A.Traille, M.M.Tentzeris and L.Roselli, "Inkjet-Printed Self-Powered Wireless Sensors for Environmental, Gas and Authentication Based Sensing", IEEE Journal on Sensors, Vol.11, No.12, pp.3139-3152, **10th Anniversary Special Issue**, ***Listed among the Top-25 IEEE Sensors Downloaded Papers in December 2011***.
121. D.Ahbe, S.Beer, T.Zwick, Y.Wang and M.M.Tentzeris, ``Dual-Band Antennas for Frequency-Doubler-Based Wireless Strain Sensing", IEEE Antennas and Wireless Propagation Letters, Vol.11, pp.216-219, 2012.
122. X.L.Quan, R.L.Lin, Y.H.Cui and M.M.Tentzeris, ``Analysis and Design of a Compact Dual-Band Directional Antenna", IEEE Antennas and Wireless Propagation Letters, Vol.11, pp.547-550, 2012.
123. J.R.Cooper, S.Kim, and M.M.Tentzeris, ``A Novel Polarization-Independent, Free-Space, Microwave Beam Splitter Utilizing an Inkjet-Printed, 2-D Array Frequency Selective Surface", IEEE Antennas and Wireless Propagation Letters, Vol.11, pp.686-688, 2012.
124. S.Kim, Y.-J.Ren, H.Lee, A.Rida, S.Nikolaou and M.M.Tentzeris, ``Monopole Antenna With Inkjet-Printed EBG Array on Paper Substrate for Wearable Applications", IEEE Antennas and Wireless Propagation Letters, Vol.11, pp.663-666, 2012.
125. C.-P.Deng, X.-Y.Liu, Z.-K.Zhang and M.M.Tentzeris, ``A Miniascape-Like Triple-Band Monopole Antenna for WBAN Applications", IEEE Antennas and Wireless propagation Letters, Vol.11, pp.1330-1333, 2012.
126. O.Jonah, S.V.Georgakopoulos and M.M.Tentzeris, ``Optimal Design Parameters for Wireless Power Transfer for Magnetic Resonance", IEEE Antennas and Wireless Propagation Letters, Vol.11, pp.1390-1393, 2012.
127. S.Bouaziz, F.Chebila, A.Traille, P.Pons, H.Aubert and M.M.Tentzeris, ``Novel Micro-fluidic Structures for Wireless Passive Temperature Telemetry Medical Systems Using Radar Interrogation Techniques in Ka-band", IEEE Antennas and Wireless Propagation Letters, Vol.11, pp.1706-1709, 2012.
128. R.L.Li, X.L.Quan, Y.H.Cui and M.M.Tentzeris, ``Directional Triple-Band Planar Antenna for WLAN/WiMax Access Points", Electronics Letters, Vol.48, No.6, pp.305-306, June 2012.
129. T.T.Thai, J.M.Mehdi, F.Chebila, H.Aubert, P.Pons, G.R.DeJean, M.M.Tentzeris and P.Plana, ``Design and Development of a Novel Passive Wireless Ultrasensitive RF Temperature Transducer for Remote Sensing", IEEE Sensors Journal, Vol.12, No.9, pp.2756-2766, September 2012.
130. B.S.Cook, A.Shamim and M.M.Tentzeris, ``Passive Low-Cost Inkjet-Printed Smart Skin Sensor for Structural Health Monitoring", Vol.6, No.14, pp.1536-1541, IET Microwaves, Antennas and Propagation, November 2012.
131. S.Kim, A.Georgiadis, A.Collado and M.M.Tentzeris, ``An Inkjet-Printed Solar-Powered Wireless Beacon on Paper for Identification and Wireless Power

Transmission Applications", IEEE Transactions on Microwave Theory and Techniques, Vol.60, No.12-2, pp.4178-4186, December 2012.

132. K.Naishadham, R.L.Li, L.Yang, T.Wu, W.Hunsicker and M.Tentzeris, ``A Shared-Aperture Dual-Band Planar Array with Self-Similar Printed Folded Dipoles", IEEE Transactions on Antennas and Propagation, Vol.61, No.2, pp.606-613, February 2013.

133. T.T.Thai, H.Aubert, P.Pons, G.DeJean, M.M.Tentzeris and R.Plana, ``Novel Design of a Highly Sensitive RF Strain Transducer for Passive and Remote Sensing in Two Dimensions", IEEE Transactions on Microwave Theory and Techniques, Vol.61, No.3, pp.1385-1396, March 2013.

134. X.Quan, R.L.Li, G.Jin and M.M.Tentzeris, ``Development of a Directional Dual-Band Planar Antenna for Wireless Applications", IET Transactions on Microwaves, Antennas and Propagation, Vol.7, No.4, pp.245-250, April 2013.

135. X.Quan, R.L.Li and M.M.Tentzeris, ``A Broadband Omnidirectional Circularly Polarized Antenna", IEEE Transactions on Antennas and Propagation, Vol.61, No.5, pp.2363-2370, May 2013.

136. B.S.Cook, T.Le, S.Palacios, A.Traille and M.M.Tentzeris, ``Only Skin Deep: Inkjet-printed Zero-Power Sensors for Large-Scale RFID-Integrated Smart Skins", IEEE Microwave Magazine, Vol.14, No.3, pp.103-114, May 2013.

137. J.Virtanen, J.Virkki, L.Sudanheimo, M.Tentzeris and L.Ukkonen, ``Automated Identification of Plywood Using Embedded Inkjet-Printed Passive UHF RFID Tags", IEEE Transactions on Automation Science and Engineering, Vol.10, No.3, pp.796-806, March 2013.

138. B.S.Cook, Y.Fang, S.Kim, T.Le, B.Goodwin, K.H.Sandhage and M.M.Tentzeris, ``Inkjet Catalyst Printing and Electroless Copper Deposition for Low-Cost Patterned Microwave Passive Devices on Paper", Electronic Materials Letters, accepted for publication.

139. R.Shigeta, T.Sasaki, M.Quan, Y.Kawahara, R.J.Vyas, M.M.Tentzeris and T.Asami, ``Ambient RF Energy Harvesting Sensor Device with Capacitor-Leakage-Aware Duty Cycle Control", IEEE Sensors Journal, Vol.13, No.8, pp.2973-2983, August 2013. ***Listed among the Top-25 IEEE Sensors Downloaded Papers***

140. R.J.Vyas, B.Cook, Y.Kawahara and M.M.Tentzeris, ``E-WEHP: A Batteryless Embedded Sensor Platform Wirelessly Powered from Ambient Digital-TV Signals", IEEE Transactions on Microwave Theory and Techniques, Vol.61, No.6, pp.2491-2505.

141. S.Kim, C.Mariotti, F.Alimenti, P.Mezzanote, A.Georgiadis, A.Collado, L.Roselli and M.M.Tentzeris, ``No Battery Required: Perpetual RFID-Enabled Wireless Sensors for Cognitive Intelligence Applications", IEEE Microwave Magazine, Vol.14, No.5, pp.66-77, May 2013.

142. R.Moro, S.Kim, M.Bozzi and M.Tentzeris, "Inkjet-printed Paper-Based Substrate-Integrated Waveguide (SIW) Components and Antennas", International Journal of Microwave and Wireless Technologies, Vol.5, No.3, pp.197-204, June 2013.

143. A.Vena, A.A.Babar, L.Sydanheimo, M.M.Tentzeris and L.Ukkonen, ``A Novel Near-Transparent ASK-Reconfigurable Inkjet-Printed Chipless RFID Tag", IEEE Antennas and Wireless Propagation Letters, Vol.12, pp.753-756, June 2013.
144. M.Hasani, A.Vena, L.Sydanheimo, L.Ukkonen and M.M.Tentzeris, ``Implementation of a Dual-Interrogation-Mode Embroidered RFID-Enabled Strain Sensor", IEEE Antennas and Wireless Propagation Letters, Vol.12, pp.1272-1275, June 2013.
145. B.S.Cook, B.Tehrani and M.M.Tentzeris, ``Multi-Layer Inkjet Printing of Milimeter-Wave Proximity-Fed Patch Arrays on Flexible Substrates", IEEE Antennas and Wireless Propagation Letters, Vol.12, pp.1351-1354, June 2013.
146. B.S.Cook, J.R.Cooper and M.M.Tentzeris, ``Multi-Layer RF Capacitors on Flexible Substrates Utilizing Inkjet Printed Dielectric Polymers", IEEE Microwave and Wireless Components Letters, Vol.23, No.7, pp.353-355, July 2013.
147. S.Kim, B.Cook, T.Le, J.Cooper, H.Lee, V.Lakafosis, R.Vyas, R.Moro, M.Bozzi, A.Georgiadis, A.Collado and M.M.Tentzeris, ``Inkjet-Printed Antennas, Sensors and Circuits on Paper Substrate", IET Microwaves, Antennas and Propagation, Vol.7, No.10, pp.858-868, October 2013.
148. A.Vena, K.Koski, E.Moradi, A.Babar, L.Sydanheimo, L.Ukkonen and M.M.Tentzeris, ``An Embroidered 2-Dimensional Chipless Strain Sensor for Wireless Structural Deformation Monitoring", IEEE Sensors Journal, Vol.13, No.12, pp.4627-4637, December 2013.
149. B.S.Cook, J.R.Cooper and M.M.Tentzeris, ``An Inkjet-Printed Microfluidic RFID-Enabled Platform for Wireless Lab-On-Chip Applications", IEEE Transactions on Microwave Theory and Techniques, Vol.61, No.12-2, pp.4714-4723, December 2013.
150. O.Jonah, A.Merwaday, S.V.Georgakopoulos and M.M.Tentzeris, "Spiral resonators for optimally efficient strongly coupled magnetic resonant systems", Journal on Wireless Power Transfer, Vol.1, No.1, pp.21-26, March 2014.
151. H.Saghlatoon, L.Sydanheimo, L.Ukkonen and M.M.Tentzeris, ``Optimization of Inkjet Printing of Patch Antennas on Low-Cost Fibrous Substrates", IEEE Antennas and Wireless Propagation Letters, Vol.13, pp.915-918, June 2014
152. B.S.Cook, R.Vyas, S.Kim, T.Thai, T.Le, A.Traille, H.Aubert and M.M.Tentzeris, "RFID-Based Sensors for Zero-Power Autonomous Wireless Sensor Networks", IEEE Sensors Journal, Vol.14, No.8, pp.2419-2431, August 2014, ***Listed among Top-25 Downloaded Papers***
153. S.H.Zheng, X.Y.Liu and M.M.Tentzeris, ``Optically Controlled Reconfigurable Band-Notched UWB Antenna for Cognitive Radio Applications", Electronics Letters, Vol.50, No.21, pp.1502-1504, October 2014.
154. S.Kim, R.Vyas, J.Bito, K.Niotaki, A.Collado, A.Georgiadi and M.M.Tentzeris, "Ambient RF Energy-Harvesting Technologies for Self-Sustainable Standalone Wireless Sensor Platforms", Proceedings of the IEEE, Vol.102, No.11, pp.1649-1666, November 2014.
155. M.M.Tentzeris, A.Georgiadis and L.Roselli, "Energy Harvesting and Scavenging [Scanning the Issue]", Proceedings of IEEE, Vol.102, No.11, pp.1644-1648, November 2014.

156. K.Niotaki, A.Collado, A.Georgiadis, S.Kim and M.M.Tentzeris, "Solar/Electromagnetic Energy Harvesting and Wireless Power Transmission", Proceedings of the IEEE, Vol,102, No,11, pp.1712-1722, November 2014.
157. J.Kimionis, A.Georgiadis, A.Collado and M.M.Tentzeris, "Enhancement of RF Tag Backscatter Efficiency With Low-Power Reflection Amplifiers", IEEE Transactions on Microwave Theory and Techniques, Vol.62, No.12-2, pp.3562-3571, December 2014.
158. S.H.Zheng, X.Liu and M.M.Tentzeris, "Optically controlled reconfigurable band-notched UWB antenna for cognitive radio systems", Electronics Letters, Vol.50, No.21, pp.1502-1504, 2014.
159. C.Mariotti, B.S.Cook, L.Roselli and M.M.Tentzeris, "State-of-the-Art Inkjet-Printed Metal-Insulator-Metal (MIM) Capacitors on Silicon Substrate", IEEE Microwave and Wireless Components Letters, Vol.25, No.1, pp.13-15, January 2015.
160. A.Vena, L.Sydanheimo, M.M.Tentzeris and L.Ukkonen, ``A Fully Inkjet-Printed Wireless and Chipless Sensor for CO2 and Temperature Detection", IEEE Sensors Journal, Vol.15, No.1, pp.89-99, January 2015.
161. Z.Li, T.Le, Z.Wu, Y.Yao, L.Li, M.Tentzeris, K.-S.Moon and C.P.Wong, ``Rational Design of a Printable, Highly Conductive Silicone-based Electrically Conductive Adhesive for Stretchable Radio-Frequency Antennas", Advanced Functional Materials, Wiley Eds., Vol.25, No.3, pp.464-470, January 2015.
162. K.Ling, M.Yoo, W.Su, K.Kim, B.Cook, M.M.Tentzeris and S.Lim,``Microfluidic Tunable Inkjet-Printed Absorber on Paper", OSA Optics Express, pp.110-120, Vol.23, No.1, January 2015.
163. S.Choi, W.Su, M.M.Tentzeris and S.Lim, ``A Novel Fluid-Reconfigurable Advanced and Delayed Phase Line Using Inkjet-Printed Microfluidic Composite Right/Left-Handed Transmission Lines", IEEE Microwave and Wireless Components Letters, Vol.25, No.2, pp.142-144, February 2015.
164. J.G.Hester, S.Kim, J.Bito, T.Le, J.Kimionis, D.Revier, C.Saintsing, W.Su, B.Tehrani, A.Traille, B.S.Cook and M.M.Tentzeris, ``Additively Manufactured Nanotechnology and Origami-Enabled Flexible Microwave Electronics", Proceedings of IEEE, Vol.103, No.4, pp.583-606, April 2015.
165. H.Saghlatoon, T.Bjorninen, L.Sydanheimo, M.M.Tentzeris and L.Ukkonen, ``Inkjet-Printed Wideband Planar Monopole Antenna on Cardboard for RF Energy-Harvesting Applications", IEEE Antennas and Wireless Propagation Letters, Vol.14, pp.325-328, June 2015.
166. X.Y.Liu, Y.Liu and M.M.Tentzeris, ``A Novel Circularly Polarized Antenna With Coin-Shaped Patches and a Ring-Shaped Strip for Worldwide UHF RFID Applications", IEEE Antennas and Wireless Propagation Letters, Vol.14, No.707-710, June 2015.
167. S.Kim, Y.Kawahara, A.Georgiadis, A.Collado and M.M.Tentzeris, ``Low-Cost Inkjet-Printed Fully Passive RFID Tags for Calibration-Free Capacitive/Haptic Sensor Applications", IEEE Sensors Journal, Vol.15, No.6, pp.3135-3145, June 2015.
168. C.Mariotti, W.Su, B.S.Cook, L.Roselli and M.M.Tentzeris, ``Development of Low-Cost Wireless Inkjet-Printed Microfluidic RF Systems and Devices for Sensing or Tunable Electronics", IEEE Sensors Journal, Vol.15, No.6, pp.3156-3163, June 2015.
169. T.Le, Z.Lin, C.P.Wong and M.M.Tentzeris, ``Smart Skins: Could they be the ultimate sensing tool?", IEEE Nanotechnology Magazine, Vol.9, No.2, pp.4-10, June 2015.

170. M.Hasani, A.Vena, L.Sydanheimo, M.M.Tentzeris and L.Ukkonen, ``A Novel Enhanced-Performance Flexible RFID-Enabled Embroidered Wireless Integrated Module for Sensing Applications", IEEE Transactions on Components, Packaging and Manufacturing Technology, Vol.5, No.9, pp.1244-1252, September 2015.
171. S.Moscato, R.Bahr, T.Le, M.Pasian, M.Bozzi, L.Perregrini and M.M.Tentzeris, ``Additive Manufacturing of 3D Substrate Integrated Waveguide Components", Electronics Letters, Vol.51, No.18, pp.1426-1428, September 2015.
172. X.Yi, T.Wu, Y.Wang and M.M.Tentzeris, "Sensitivity Modeling of an RFID-Based Strain-Sensing Antenna with Dielectric Constant Change", IEEE Sensors Journal, Vol.15, No.11, pp.6147-6155, November 2015.
173. J.Kimionis, M.Isakov, B.S.Koh, A.Georgiadis and M.M.Tentzeris, ``3D-Printed Origami Packaging with Inkjet-Printed Antennas for RF Harvesting Sensors", IEEE Transactions on Microwave Theory & Techniques, Vol.63, No.12, pp.4521-4532, December 2015.
174. J.Bito, J.G.Hester and M.M.Tentzeris, ``Ambient RF Energy Harvesting From a Two-Way Talk Radio for Flexible Wearable Wireless Sensor Devices Utilizing Inkjet Printing Technologies", IEEE Transactions on Microwave Theory & Techniques, Vol.63, No.12, pp.4533-4543, December 2015.
175. Y.He, Z.Pan, X.Cheng, J.Qiao and M.M.Tentzeris, ``A Novel Dual-Band, Dual-Polarized, Miniaturized and Low-Profile Base Station Antenna",, IEEE Transactions on Antennas and Propagation, Vol.63, No.12, pp.5399-5408, December 2015.
176. X.Liu, S.Yao, B.S.Cook, M.M.Tentzeris and S.V.Georgakopoulos, ``An Origami Reconfigurable Axial-Mode Bifilar Helical Antenna",, IEEE Transactions on Antennas and Propagation, Vol.63, No.12, pp.5897-5903, December 2015.
177. R.Goncalves, S.Rima, R.Magueta, P.Pinho, A.Collado, A.Georgiadis, J.Hester, N.Carvalho and M.M.Tentzeris, ``RFID-Based Wireless Passive Sensors Utilizing Cork Materials",, IEEE Sensors Journal, Vol.15, No.12, pp.7242-7251, December 2015.
178. P.Vryonides, S.Nikolaou, S.Kim and M.M.Tentzeris, “Reconfigurable dual-mode band-pass filter with switchable bandwidth using PIN diodes”, International Journal of Microwave and Wireless Technologies, Vol.7, No.6, pp.655-660, December 2015.
179. J.Bito, S.Jeong and M.M.Tentzeris, “A Real-Time Electrically Controlled Active Matching Circuit Utilizing Genetic Algorithms for Wireless Power Transfer to Biomedical Implants”, IEEE Transactions on Microwave Theory and Techniques, Vol.64, No.2, pp.365-374, February 2016.
180. S.Kim, A.Shamim, A.Georgiadis, H.Aubert and M.M.Tentzeris, “Fabrication of Fully Inkjet-Printed Vias and SIW Structures on Thick Polymer Substrates”, IEEE Transactions on Components, Packaging and Manufacturing Technology, Vol.6, No.3, pp.486-496, March 2016.
181. X.Liu, Y.Di, H.Liu, Z.Wu and E.Tentzeris, ``A Planar Windmill-like Broadband Antenna Equipped with Artificial Magnetic Conductor for Off-Body Communications", IEEE Antennas and Wireless Propagation Letters, Vol.15, pp.64-67, June 2016.
182. H.Lee, B.S.Cook, K.P.Murali, M.Raj and M.M.Tentzeris, “Inkjet Printed High-Q RF Inductors on Paper Substrate with Ferromagnetic Material”, IEEE Microwave and Wireless Components Letters, Vol.26, No.6, pp.419-421, June 2016.

183. W.Su, B.S.Cook and M.M.Tentzeris, “Additively Manufactured Microfluidics-Based “Peel-and-Replace” RF Sensors for Wearable Applications”, IEEE Transactions on Microwave Theory and Techniques, Vol.64, No.6, pp.1928-1936, June 2016.
184. Q.Liu, T.Le, S.He and M.M.Tentzeris, “Button-Shaped Radio-Frequency Identification Tag Combining Three-Dimensional and Inkjet-Printing Technologies”, IET Microwaves, Antennas & Propagation, Vol.10, No.7, pp.737-741, July 2016.
185. S.Moscato, R.Bahr, T.Le, M.Pasian, M.Bozzi, L.Perregrini and M.M.Tentzeris, ``Infill Dependent 3D-Printed Material Based on NinjaFlex Filament for Antenna Applications", IEEE Antennas and Wireless Propagation Letters, Vol.15, pp.1506-1509, June 2016.
186. B.K.Tehrani, B.S.Cook and M.M.Tentzeris, ``Inkjet Printing of Multilayer Millimeter-Wave Yagi-Uda Antennas on Flexible Substrates", IEEE Antennas and Wireless Propagation Letters, Vol.15, pp.143-146, June 2016.
187. Y.Fang, J.Hester, B.Deglee, C.-C.Tuan, P.Brooke, T.Le, C.P.Wong, M.M.Tentzeris and K.H.Sandhage, ``A Novel, Facile, Layer-by-Layer Substrate Surface Modification for the Fabrication of All-Inkjet-Printed Flexible Electronic Devices on Kapton", Journal of Materials Chemistry C, (4), pp.7052-7060, July 2016.
188. A.Georgiadis and M.M.Tentzeris, "Guest Editorial for the Special Issue on Radio-Frequency Identification (RFID), Sensing and Imaging" IEEE Transactions on Microwave Theory and Techniques, Vol.64, No.7, pp.2292-2293, July 2016.
189. C.Cho, X.Yi, D.Li, Y.Wang and M.M.Tentzeris, ``Passive Wireless Frequency Doubling Antenna Sensor for Strain and Crack Sensing", IEEE Sensors Journal, Vol.16, No.14, pp.5725-5733, July 2016.
190. A.Farid, N.J.Laurita, B.Tehrani, J.G.Hester, M.M.Tentzeris and N.P.Hermitage, ``Inkjet Printed Wire-Grid Polarizers for the THz Frequency Rangeâ€□, Journal of Infrared, Millimeter and Terahertz Waves, October 2016.
191. W.Su, B.S.Cook, Y.Fang and M.M.Tentzeris, ``Fully Inkjet-Printed Microfluidics: A Solution to Low-Cost Rapid Three-Dimensional Microfluidics Fabrication with Numerous Electrical and Sensing Applicationsâ€□, Nature Scientific Reports, No.6:35111, October 2016.
192. S.Choi, S.Eom, M.M.Tentzeris and S.Lim, ``Inkjet-Printed Electromagnet-Based Touchpad Using Spiral Resonators", IEEE Journal of Microelectromechanical Systems, Vol.25, No.5, pp.947-953, October 2016.
193. J.Hester and M.M.Tentzeris, ``Inkjet-Printed Flexible mm-Wave Van-Atta Reflectarrays: A Solution for Ultralong-Range Dense Multitag and Multisensing Chipless RFID Implementations for IoT Smart Skinsâ€□, IEEE Transactions on Microwave Theory and Techniques, Vol.64, No.12, pp.4763-4773, December 2016.
194. J.Kimionis and M.M.Tentzeris, ``Pulse Shaping: The Missing Piece of Backscatter Radio and RFID, IEEE Transactions on Microwave Theory and Techniques, Vol.64, No.12, pp.4774-4788, December 2016.
195. Y.Fang, J.G.D.Hester, W.Su, J.H.Chow, S.K.Sitaraman and M.M.Tentzeris, ``A bio-enabled maximally mild layer-by-layer Kapton surface modification approach for the fabrication of all-inkjet-printed flexible electronic devices", Nature Scientific Reports, No.6:39909, December 2016.
196. C.Mariotti, F.Alimenti, L.Roselli and M.M.Tentzeris, ``High-Performance RF Devices and Components on Flexible Cellulose Substrate by Vertically

Integrated Additive Manufacturing Technologies", IEEE Transactions on Microwave Theory and Techniques, Vol.65, No.1, pp.62-71, January 2017.

197. C.Cho, X.Yi, D.Li, Y.Wang and M.M.Tentzeris, ``An Eigenvalue Perturbation Solution for the Multiphysics Simulation of Antenna Strain Sensors", IEEE Journal of Multiscale and Multiphysics Computational Techniques, Vol.2, pp.49-57, February 2017.

198. H.-R.Ahn and M.M.Tentzeris, ``Novel Generic Assymetric and Symmetric Equivalent Circuits of 90o Coupled Transmission-Line Sections Applicable to Marchand Baluns", IEEE Transactions on Microwave Theory and Techniques, Vol.65, No.3, pp.746-760, March 2017.

199. S.A.Nauroze, J.G.Hester, B.Tehrani, W.Su, J.Bito, R.Bahr, J.Kimionis and M.M.Tentzeris, "Additively Manufactured RF Components and Modules: Toward Empowering the Birth of Cost-Efficient Dense and Ubiquitous IoT Implementations", Proceedings of the IEEE, Vol.105, No.4, pp.702-722, April 2017.

200. J.Bito, S.Jeong and M.M.Tentzeris, "A Novel Heuristic Passive and Active Matching Circuit Design Method for Wireless Power Transfer to Moving Objects", IEEE Transactions on Microwave Theory and Techniques, Vol.65, No.4, pp.1094-1102, April 2017.

201. J.G.D.Hester, J.Kimionis and M.M.Tentzeris, "Printed Motes for IoT Wireless Networks: State of the Art, Challenges and Outlooks", IEEE Transactions on Microwave Theory and Techniques, Vol.65, No.5, pp.1819-1830, May 2017.

202. J.Bito, R.Bahr, J.G.Hester, S.A.Nauroze, A.Georgiadis and M.M.Tentzeris, ``A Novel Solar and Electromagnetic Energy Harvesting System with a 3D Printed Package for Energy Efficient Internet-of-Things Wireless Sensors", IEEE Transactions on Microwave Theory and Techniques, Vol.65, No.5, pp.1831-1842, May 2017.

203. H.-R.Ahn and M.M.Tentzeris, ``A Novel Wideband, Compact, Microstrip Coupled-Line Ring Hybrid for Arbitrarily High Power-Division Ratios", IEEE Transactions on Circuits and Systems II, Vol.64, No.6, pp.630-634, June 2017.

204. X.Liu, Z.Wu, Y.Fan and M.M.Tentzeris, "A Miniaturized CSRR Loaded Wide-Beamwidth Circularly Polarized Implantable Antenna for Subcutaneous Real-Time Glucose Monitoring", IEEE Antennas and Wireless Propagation Letters, Vol.16, pp.577-580, June 2017.

205. S.I.H.Shah, D.Lee, M.M.Tentzeris and S.Lim, "A Novel High-Gain Tetrahedron Origami," IEEE Antennas and Wireless Propagation Letters, Vol.16, pp.848-851, June 2017.

206. Y.Fang, M.Akbari, J.G.D.Hester, L.Sydanheimo, L.Ukkonen and M.M.Tentzeris, ``Sensitivity Enhancement of Flexible Gas Sensors Via Conversion of Inkjet-Printed Silver Electrodes Into Porous Gold Counterparts□," **Nature** Scientific Reports, No.7:8988, August 2017.

207. W.Su and M.M.Tentzeris, "Smart Test Strips: Next-Generation Inkjet-Printed Wireless Comprehensive Liquid Sensing Platforms," IEEE Transactions on Industrial Electronics, Vol.64, No.9, pp.7359-7367, September 2017.

208. J.Kimionis, A.Collado, M.M.Tentzeris and A.Georgiadis, "Octave and Decade Printed UWB Rectifiers Based on Nonuniform Transmission Lines for Energy Harvesting," IEEE Transactions on Microwave Theory and Techniques, Vol.65, No.11, pp.4326-4334, November 2017.

209. S.N.Daskalakis, J.Kimionis, A.Collado, G.Goussetis, M.M.Tentzeris and A.Georgiadis, "Ambient Backscatterers Using FM Broadcasting for Low Cost and Low Power Wireless Applications," IEEE Transactions on Microwave Theory and Techniques, Vol.65, No.12, pp.5251-5262, December 2017.

210. D.Henry, J.G.D.Hester, H.Aubert, P.Pons and M.M.Tentzeris, "Long-Range Wireless Interrogation of Passive Humidity Sensors Using Van-Atta Cross-Polarization Effect and Different Beam Scanning Techniques", IEEE Transactions on Microwave Theory and Techniques, Vol.65, No.12, pp.5345-5354, December 2017.
211. T.-H.Lin, J.Bito, J.G.D.Hester, J.Kimionis, R.A.Bahr and M.M.Tentzeris, "On-Body Long-Range Wireless Backscattering Sensing System Using Inkjet-/3D-Printed Flexible Ambient RF Energy Harvesters Capable of Simultaneous DC and Harmonics Generation", IEEE Transactions on Microwave Theory and Techniques, Vol.65, No.12, pp.5389-5400, December 2017.
212. V.Palazzi, J.Hester, J.Bito, F.Alimenti, C.Kalialakis, A.Collado, P.Mezzanotte, A.Georgiadis, L.Roselli and M.M.Tentzeris, "A Novel Ultra-Lightweight Multiband Rectenna on Paper for RF Energy Harvesting in the Next Generation LTE Bands ," IEEE Transactions on Microwave Theory and Techniques, Vol.66, No.1, pp.366-379, January 2018.
213. R.Bahr, B.Tehrani and M.M.Tentzeris, "Exploring 3-D Printing for New Applications: Novel Inkjet- and 3D-Printed Millimeter-Wave Components, Interconnects, and Systems", IEEE Microwave Magazine, Vol.19, No.1, pp.57-66, January 2018.
214. S.I.H.Shah, M.M.Tentzeris and S.Lim, "Planar quasi-isotropic antenna for drone communications",Microwave and Optical Technology Letters, Vol.60, No.5, pp.1290-1295, April 2018.
215. Y.Yoon, D.Lim, M.M.Tentzeris and S.Lim, "Low-cost metamaterial absorber using a three-dimensional circular truncated cone", Microwave and Optical Technology Letters, Vol.60, No.7, pp.1622-1630, May 2018.
216. J.Kimionis, W.Su, J.Hester, J.Bito, X.He, T.-H.Lin and M.M.Tentzeris, "Zero-Power Sensors for Smart Objects: Novel Zero-Power Additively Manufactured Wireless Sensor Modules for IoT Applications", IEEE Microwave Magazine, Vol.19, No.6, pp.32-47, June 2018.
217. S.Kim and M.M.Tentzeris, “Parylene coated waterproof washable inkjet-printed dual-band antenna on paper substrate”, International Journal of Microwave and Wireless Technologies, Vol.10, No.7, pp.814-818, September 2018.
218. S.N.Daskalakis, G.Goussetis, S.D.Assimonis, M.M.Tentzeris and A.Georgiadis, "A uW Backscatter-Morse-Leaf Sensor for Low-Power Agricultural Wireless Sensor Networks", IEEE Sensors Journal, Vol.18, No.19, pp.7889-7898, October 2018.
219. S.A.Nauroze, L.S.Novelino, M.M.Tentzeris and G.H.Paulino, ``Continuous-Range Tunable Multilayer Frequency-Selective Surfaces Using Origami and Inkjet Printing", **Proceedings of the National Academy of Sciences**, Vol.115, No.52, pp.13210-13215, December 2018.
220. M.Ali, F.Liu, A.Watanabe, P.M.Raj, V.Sundaram, M.M.Tentzeris and R.R.Tummala, "First Demonstration of Compact, Ultra-Thin Low-Pass and Bandpass Filters for 5G Small-Cell Applications", IEEE Microwave and Wireless Components Letters, Vol.28, No.12, pp.1110-1112, December 2018.
221. S.N.Daskalakis, R.Correia, G.Goussetis, M.M.Tentzeris, N.B.Carvalho and A.Georgiadis, "Four-PAM Modulation of Ambient FM Backscattering for Spectrally Efficient Low-Power Applications", IEEE Transactions on Microwave Theory and Techniques, Vol.66, No.12, pp.5909-5921, December 2018.
222. A.Eid, J.Hester, Y.Fang, B.Tehrani, S.A.Nauroze, R.Bahr and M.M.Tentzeris, "Nanotechnology-Empowered Flexible Printed Wireless

Electronics: A Review of Various Applications of Printed Materials", IEEE Nanotechnology Magazine, Vol.13, No.1, pp.18-29, January 2019.

223. S.I.H.Shah, M.M.Tentzeris and S.Lim, "A Deployable Quasi-Yagi Monopole Antenna Using Three Origami Magic Spiral Cubes", IEEE Antennas and Wireless Propagation Letters, Vol.18, No.1, pp.147-151, January 2019.

224. H.-R.Ahn and M.M.Tentzeris, "Wideband and Compact Impedance-Transforming 90deg DC Blocks With Symmetric Coupled Transmission-Line Sections", IEEE Transactions on Components, Packaging and Manufacturing Technology, Vol.9, No.1, pp.80-87, January 2019.

225. M.Kheir, M.M.Tentzeris, A.Abdelgawad and I.You, Guest Editorial: Special Issue on Intrinsic Hardware Security for Internet of Things Infrastructure, IEEE Internet of Things Journal, Vol.6, No.1, pp.320-324, February 2019.

226. D.-G.Seo, J.-H.Kim, M.M.Tentzeris and W.-S.Lee, "A Quadruple-Polarization Reconfigurable Feeding Network for UAV RF Sensing Antennas", IEEE Microwave and Wireless Components Letters, Vol.29, No.3, pp.183-185, March 2019.

227. H.-R.Ahn and M.M.Tentzeris, "Arbitrary Power-Division Branch-Line Hybrids for High-Performance, Wideband and Selective Harmonic Suppressions from 2fo", IEEE Transactions on Microwave Theory and Techniques, Vol.67, No.3, pp.978-987, March 2019.

228. Y.Kim, D.Lim, E.Park, M.M.Tentzeris and S.Lim, "Wide frequency switchable microwave resonator by injecting eutectic gallium indium into microfluidic defected ground structure", Microwave and Optical Technology Letters, Vol.61, No.10, pp.2405-2409, June 2019.

229. S.N.Daskalakis, A.Georgiadis, G.Goussetis and M.M.Tentzeris, "A Rectifier Circuit Insensitive to the Angle of Incidence of Incoming Waves Based on a Wilkinson Power Divider", IEEE Transactions on Microwave Theory and Techniques, Vol.67, No.7, pp.3210-3218, July 2019.

230. H.-R.Ahn and M.M.Tentzeris, "Balanced-to-Unbalanced Power Dividers for Arbitrary Power Division Ratios and For Arbitrary Real Termination Impedances", IET Microwaves, Antennas & Propagation, Vol.13, No.7, pp.904-910, July 2019.

231. H.-R.Ahn and M.M.Tentzeris, "In-Phase T-Junction: Study and Application to Gysel Power Dividers for High Power-Division Ratios Requiring No High-Impedance Transmission-Line Section", IEEE Access, Vol.7, pp.18146-18154, July 2019.

232. H.-R.Ahn and M.M.Tentzeris, "Compact and Wideband General Coupled-Line Ring Hybrids (GCRHs) for Arbitrary Circumferances and Arbitrary Power-Division Ratios", IEEE Access, Vol.7, pp.33414-33423, July 2019.

233. V.Palazzi, W.Su, R.Bahr, S.Bittolo-Bon, F.Alimenti, P.Mezzanotte, L.Valentini, M.M.Tentzeris and L.Roselli, "3D-Printing-Based Selective-Ink Deposition Technique Enabling Complex Antenna and RF Structures for 5G Applications up to 6 GHz", IEEE Transactions on Components, Packaging and Manufacturing Technology, Vol.9, No.7, pp.1434-1447, July 2019.

234. H.-R.Ahn and M.M.Tentzeris, "Complex Impedance Transformers Based on Allowed and Forbidden Regions", IEEE Access, Vol.7, pp.39288-39298, July 2019.

235. W.-S.Lee, S.Park, J.-H.Lee and M.M.Tentzeris, "Longitudinally Misalignment-Insensitive Dual-Band Wireless Power and Data Transfer Systems

for a Position Detection of Fast-Moving Vehicles", IEEE Transactions on Antennas and Propagation, Vol.67, No.8, pp.5614-5622, August 2019.

236. Y.Xu, Y.Kim, M.M.Tentzeris and S.Lim, “Bi-Directional Loop Antenna Array Using Magic Cube Origami”, Sensors, Vol.19, No.18, Article 3911, September 2019.

237. Y.Kim, M.M.Tentzeris and S.Lim, "Optically Transparent Metamaterial Absorber Using Inkjet Printing Technology", Materials, Vol.12, Article 3406, doi:10.3390/ma12203406, October 2019.

238. S.Jeong, J.G.D.Hester, W.Su and M.M.Tentzeris, "Read/Interrogation Enhancement of Chipless RFID's Using Machine Learning Techniques", IEEE Antennas and Wireless Propagation Letters, Vol.18, No.11, pp.2272-2276, November 2019.

239. S.A.Nauroze and M.M.Tentzeris, "A Thermally Actuated Fully Inkjet-Printed Origami-Inspired Multilayer Frequency Selective Surface with Continuous-Range Tunability Using Polyester-Based Substrates", IEEE Transactions on Microwave Theory and Techniques, Vol.67, No.12, pp.4944-4954, December 2019.

240. S.Jeong, T.-H.Lin and M.M.Tentzeris, "A Real-Time Range-Adaptive Impedance Matching Utilizing a Machine Learning Strategy Based on Neural Networks for Wireless Power Transfer Systems", IEEE Transactions on Microwave Theory and Techniques, Vol.67, No.12, pp.5340-5347, December 2019.

241. Y.Guan, Y.Wu and M.M.Tentzeris, "A Bidirectional Absorptive Common-Mode Filter Based on Interdigitated Microstrip Coupled Lines for 5G "Green" Communications", IEEE Access, Vol.8, pp.20759-20769, January 2020, doi: 10.1109/ACCESS.2020.2968931.

242. Y.Fan, H.Liu, X.Y.Liu, Y.Cao, Z.X.Li and M.M.Tentzeris, "Novel Coated Differentially Fed Dual-Band Fractal Antenna for Implantable Medical Devices", IET Microwaves, Antennas & Propagation, Vol.14, No.2, pp.199-208, February 2020.

243. E.M.Jung, Y.Cui, T.-H.Lin, X.He, A.Eid, J.G.D.Hester, G.D.Abowd, T.E.Starner, W.-S.Lee and M.M.Tentzeris, "A Wideband, Quasi-Isotropic, Kilometer-Range FM Energy Harvester for Perpetual IoT", IEEE Microwave and Wireless Components Letters, Vol.30, No.2, pp.201-204, February 2020, doi: 10.1109/LMWC.2019.2957653.

244. H.-R.Ahn, M.M.Tentzeris, T.-H.Lin, B.Tehrani and X.He, "Coupled Lines for Wearable Power Dividers: Coupled Transmission-Line Sections for Power Dividers in Wearable and Flexible RF Electronics", IEEE Microwave Magazine, Vol.21, No.2, pp.5614-5622, February 2020, doi: 10.1109/MMM.2019.2952016.

245. A.O.Watanabe, B.K.Tehrani, T.Ogawa, P.M.Raj, M.M.Tentzeris and R.R.Tummala, "Ultra-Low-Loss Substrate-Integrated Waveguides in Glass-Based Substrates for Millimeter-Wave Applications", IEEE Transactions on Components, Packaging and Manufacturing Technology, Vol.10, No.3, pp.531-533, March 2020, doi: 10.1109/TCPMT.2020.2968305.

246. X.He, J.Zhu, W.Su and M.M.Tentzeris, "RFID Based Non-Contact Human Activity Detection Exploiting Cross Polarization", IEEE Access, Vol.8, pp.46585-46595, March 2020, doi: 10.1109/ACCESS.2020.2979080.

247. A.Adeyeye, Y.Cui, A.Eid, J.Hester and M.M.Tentzeris, "A Winning Backscatter Modulator: A Quarter-gram Ultrahigh-Frequency RFID for On-Metal Operation", IEEE Microwave Magazine, Vol.21, No.3, pp.96-100, March 2020, doi: 10.1109/MMM.2019.2958166.

248. H.Jeong, Y.Kim, M.M.Tentzeris and S.Lim, "Gain-Enhanced Metamaterial Absorber-Loaded Monopole Antenna for Reduced Radar Cross-Section and Back Radiation", Materials, Vol.13, Article 1247, March 2020, doi:10.3390/ma13051247.
249. D.H.Le, Y.Xu, M.M.Tentzeris and S.Lim, “Transformation from 2D meta-pixel to 3D meta-pixel using auxetic kirigami for programmable multifunctional electromagnetic response”, Elsevier Extreme Mechanics Letters, Vol.36, Article 100670, April 2020.
250. W.Su, J.Zhu, H.Liao and M.M.Tentzeris, "Wearable Antennas for Cross-Body Communication and Human Activity Recognition", IEEE Access, Vol.8, pp.58575-58584, April 2020, doi: 10.1109/ACCESS.2020.2982965.
251. A.Eid, J.G.D.Hester, J.Costantine, Y.Tawk, A.H.Ramadan and M.M.Tentzeris, "A Compact Source-Load Agnostic Flexible Rectenna Topology for IoT Devices", IEEE Transactions on Antennas and Propagation, Vol.68, No.4, pp.2621-2629, April 2020, doi: 10.1109/TAP.2019.2955211.
252. Y.Kim, Y.Cui, M.M.Tentzeris and S.Lim, "Additively Manufactured Electromagnetic Based Planar Pressure Sensor Using Substrate Integrated Waveguide Technology", Additive Manufacturing, Vol.34, Article 101225, May 2020.
253. S.A.Alotaibi, Y.Cui and M.M.Tentzeris, "CSRR Based Sensors for Relative Permittivity Measurement With Improved and Uniform Sensitivity Throughout [0.9-10.9] GHz Band", IEEE Sensors Journal, Vol.20, No.9, pp.4667-4678, May 2020, doi: 10.1109/JSEN.2019.2951172.
254. G.Dong, W.Wang, Y.Wu, W.Li, Y.Liu and M.M.Tentzeris, "Dual-Band Balanced Bandpass Filter Using Slotlines Loaded Patch Resonators with Independently Controllable Bandwidths", IEEE Microwave and Wireless Components Letters, Vol.30, No.7, pp.653-656, July 2020, doi: 10.1109/LMWC.2020.2995963.
255. G.Dong, W.Wang, Y.Wu, Y.Liu and M.M.Tentzeris, "Filtering Rat-Race Couplers with Impedance Transforming Characteristics Based on Terminated Coupled Line Structures", IET Microwaves, Antennas & Propagation, Vol.14, No.8, pp.734-742, July 2020.
256. G.Dong, W.Wang, Y.Wu, Y.Liu, Y.Fang and M.M.Tentzeris, "Compact Dual-Band Filtering Power Divider with Independently Controllable Bandwidths Using Shorted Patch Resonators", IET Microwaves, Antennas & Propagation, Vol.14, No.8, pp.759-767, July 2020, doi: 10.1109/LMWC.2020.2995963.
257. X.He, B.K.Tehrani, R.Bahr, W.Su and M.M.Tentzeris, "Additively Manufactured mm-Wave Multichip Modules with Fully Printed "Smart" Encapsulation Structures", IEEE Transactions on Microwave Theory and Techniques, Vol.68, No.7, pp.2716-2724, July 2020, doi: 10.1109/TMTT.2019.2956934.
258. H.-R.Ahn and M.M.Tentzeris, "Complex Impedance Transformers: Their Use in Designing Various Ultracompact and Wideband Power Dividers", IEEE Microwave Magazine, Vol.21, No.12, pp.53-64, September 2020, doi: 10.1109/MMM.2020.2998421.
259. S.Jeong, M.M.Tentzeris and S.Kim, "Machine Learning Approach for Wirelessly Powered RFID-based Backscattering Sensor System", IEEE Journal of Radio Frequency Identification, Vol.4, No.3, pp.186-194, September 2020, doi: 10.1109/JRFID.2020.3004035.
260. M.Ali, A.O.Watanabe, T.-H.Lin, D.Okamoto, M.R.Pulugurtha, M.M.Tentzeris and R.R.Tummala, "Package-Integrated Wideband Power Dividing

Networks and Antenna Arrays for 28-GHz 5G New Radio Bands", IEEE Transactions on Components, Packaging and Manufacturing Technology, Vol.10, No.9, pp.1515-1523, September 2020, doi: 10.1109/TCPMT.2020.3013725.

261. H.Jeong, Y.Cui, M.M.Tentzeris and S.Lim, “Hybrid (3D and inkjet) printed electromagnetic pressure sensor using metamaterial absorber”, Elsevier Additive Manufacturing, Vol.35, Article 101405, October 2020.

262. H.-R.Ahn and M.M.Tentzeris, "A Novel Compact Isolation Circuit Suitable for Ultracompact and Wideband Marchand Baluns", IEEE Transactions on Circuits and Systems II: Express Briefs, Vol.67, No.10, pp.2299-2303, October 2020, doi: 10.1109/TCSII.2019.2960005.

263. A.Eid, J.Hester and M.M.Tentzeris, "Rotman Lens-Based Wide Angular Coverage and High Gain Semi-Passive Architecture for Ultra-Long Range mm-Wave RFIDs", IEEE Antennas and Wireless Propagation Letters, Vol.19, No.11, pp.1943-1947, November 2020, doi: 10.1109/LAWP.2020.3002924.

264. T.-H.Lin, K.Kanno, A.O.Watanabe, P.M.Raj, R.R.Tummala, M.Swaminathan and M.M.Tentzeris, "Broadband and Miniaturized Antenna-in-Package (AiP) Design for 5G Applications", IEEE Antennas and Wireless Propagation Letters, Vol.19, No.11, pp.1963-1967, November 2020, doi: 10.1109/LAWP.2020.3018064.

265. A.Eid, X.He, R.Bahr, T.-H.Lin, Y.Cui, A.Adeyeye, B.Tehrani and M.M.Tentzeris, "Inkjet-/3D-/4D-Printed Perpetual Electronics and Modules: RF and mm-Wave Devices for 5G+, IoT, Smart Agriculture, and Smart Cities Applications", IEEE Microwave Magazine, vol. 21, no. 12, pp. 87-103, Dec. 2020, doi: 10.1109/MMM.2020.3023310

266. A.O.Watanabe, T.-H.Lin, M.Ali, Y.Wang, V.Smet, P.M.Raj, M.M.Tentzeris, R.R.Tummala and M.Swaminathan, "Ultrathin Antenna-Integrated Glass-Based Millimeter-Wave Package With Through-Glass Vias", IEEE Transactions on Microwave Theory and Techniques, Vol.68, No.12, pp.5082-5092, December 2020, doi: 10.1109/IMS30576.2020.9224010.

267. A.Eid, J.G.D.Hester and M.M.Tentzeris, ``5G as a Wireless Power Grid," Nature Scientific Reports, No.11:636, January 2021. **Top 99%-126,000+ Paper Views**

268. V.Palazzi, A.Cicioni, F.Alimenti, P.Mezzanotte, M.M.Tentzeris and L.Roselli, "Compact 3D-Printed 4x4 Butler Matrix Based on Low-Cost and Curing-Free Additive Manufacturing", IEEE Microwave and Wireless Components Letters, Vol.31, No.2, pp.125-128, February 2021, doi: 10.1109/LMWC.2020.3041569.

269. H.Yang, X.Y.Liu, Y.Fan and M.M.Tentzeris, “Flexible Circularly Polarized Antenna with Axial Ratio Bandwidth Enhancement for Off-Body Communications”, Vol.15, No.2, pp. 754-767, March 2021.

270. A.D.Boursianis, M.S.Papadopoulou, S.Koulouridis, P.Rocca, A.Georgiadis, M.M.Tentzeris and S.K.Goudos, “Triple-Band Single-Layer Rectenna for Outdoor RF Energy Harvesting Applications”, MDPI Sensors, Vol.21, No.10, Article 3460, May 2021.

271. A.Adeyeye, C.Lynch, A.Eid, J.Hester and M.Tentzeris, "5.8GHz Low-Power Tunnel-Diode-Based Two-Way Repeater for Non-Line-of-Sight Interrogation of RFIDs and Wireless Sensor Networks", IEEE Microwave and Wireless Components Letters, Vol.31, No.6, pp.794-797, June 2021, doi: 10.1109/LMWC.2021.3064734.

272. J.Kimionis, A.Georgiadis, S.N.Daskalakis and M.M.Tentzeris, ``A Printed Millimetre-Wave and Antenna Array for Backscatter Communications at Gigabit Data Rates," Nature Electronics, Vol.4, pp.439-446, June 2021.
273. F.A.Asadallah, A.Eid, G.Shehadeh, J.Costantine, Y.Tawk and M.M.Tentzeris, "Digital Reconfiguration of a Single Arm Three-Dimensional Bowtie Antenna", IEEE Transactions on Antennas and Propagation, Vol.69, No.7, pp.4184-4188, July 2021, doi: 10.1109/TAP.2020.3044703.
274. Y.Cui, R.Bahr, S.Van Rijs and M.M.Tentzeris, “A novel 4-DOF wide-range tunable frequence selective surface using an origami “eggbox” structure”, International Journal of Microwave and Wireless Technologies, Vol.13, No.7, pp.727-733, September 2021.
275. A.D.Boursianis, M.S.Papadopoulou, S.Nikolaidis, P.Sarigiannidis, K.Psannis, A.Georgiadis, M.M.Tentzeris and S.Goudos, “Novel Design Framework for Dual-Band Frequency Selective Surfaces Using Multi-Variant Differential Evolution”, MDPI Mathematics, Vol.9, No.19, Article 2381, September 2021.
276. T.Cheng, B.Li, Y.Zhang, Y.Li, C.Ramey, E.M.Jung, Y.Cui, S.G.Swaminathan, Y.Do, M.Tentzeris, G.D.Abowd and H.Oh, "Duco: Autonomous Large-Scale Direct-Circuit-Writing (DCW) on Vertical Everyday Surfaces Using A Scalable Hanging Plotter", Proceedings of the ACM on Interactive, Mobile, Wearable and Ubiquitous Technologies, Vol.5, No.3, Article 92, September 2021.

277. R.Torres, R.Correia, N.B.Carvalho, S.Daskalakis, G.Goussetis, Y.Ding, A.Georgiadis, A.Eid, J.Hester and M.M.Tentzeris, “Backscatter Communications”, IEEE Journal of Microwaves, Vol.1, No.4, pp.864-878, October 2021, doi: 10.1109/JMW.2021.3110058
278. E.M.Jung, R.Vyas and M.M.Tentzeris, "A Wideband, Quasi-Isotropic, Ambient RF Energy Harvester Combining UHF-TV and FM", IEEE Antennas and Wireless Propagation Letters, Vol.20, No.10, pp.1854-1858, October 2021, doi: 10.1109/LAWP.2021.3095102.
279. A.Eid, J.Zhu, L.Xu, J.G.D.Hester and M.M.Tentzeris, "Holography-Based Target Localization and Health Monitoring Technique Using UHF Tags Array", IEEE Internet of Things Journal, Vol.8, No.19, pp.14719-14730, October 2021, doi: 10.1109/JIOT.2021.3071693.
280. C.Song, Y.Ding, J.G.D.Hester, X.He, R.Bahr, A.Georgiadis, G.Goussetis and M.M.Tentzeris, “Advances in Wirelessly Powered Backscatter Communications: Antenna/RF Circuitry Design to Printed Flexible Electronics”, Proceedings of IEEE, Vol.110, No.1, pp.171-192, January 2022, doi: 10.1109/JPROC.2021.3125285. ***[2023 Proceedings of IEEE Best Paper Award]***
281. A.D.Papadopoulos, B.K.Tehrani, R.A.Bahr, E.M.Tentzeris and E.N.Glytsis, “Uncertainty Quantification of Printed Microwave Interconnects by Use of the Sparse Polynomial Chaos Expansion Method”, IEEE Microwave and Wireless Components Letters, Vol.32, No.1, pp.1-4, January 2022, doi: 10.1109/LMWC.2021.3115618.
282. V.Palazzi, L.Roselli, M.M.Tentzeris, P.Mezzanotte and F.Alimenti, “Energy-Efficient Harmonic Transponder Based on On-Off Keying Modulation for Both Identification and Sensing”, Sensors, Vol.22, No.2, Article 620, January 2022.

283. X.He, Y.Cui and M.M.Tentzeris, “Tile-Based Massively Scalable MIMO and Phased Arrays for 5G/B5G-Enabled Smart Skins and Reconfigurable Intelligent Surfaces”, Nature Scientific Reports, No.12:2741, February 2022.
284. A.O.Adeyeye, C.Lynch, A.Eid, J.G.D.Hester and M.M.Tentzeris, “Energy Autonomous Two-Way Repeater System for Non-Line-of-Sight Interrogation in Next Generation Wireless Sensor Networks”, IEEE Transactions on Microwave Theory and Techniques, Vol.70, No.3, pp.1779-1788, March 2022, doi: 10.1109/TMTT.2022.3144320.
285. A.Kiourti, A.M.Abbosh, M.Athanasiou, T.Bjorninen, A.Eid, C.Furse, K.Ito, G.Lazzi, M.Manoufali, M.Pastorino, M.M.Tentzeris, K.Tisdale, E.Topsakal, L.Ukkonen, W.G.Whittow, H.Zhang and K.S.Nikita, “Next-Generation Healthcare: Enabling Technologies for Emerging Bioelectromagnetics Applications”, IEEE Open Journal of Antennas and Propagation, Vol.3, pp.363-390, March 2022, 2022, doi: 10.1109/OJAP.2022.3162110 .
286. G.Dong, X.Yang, Y.Fang and M.M.Tentzeris, “Filtering Push-Pull Power Amplifier Based on Multifunctional Impedance Matching Network”, IEEE Microwave and Wireless Components Letters, Vol.32, No.5, pp.422-425, May 2022, doi: 10.1109/LMWC.2021.3136718.
287. S.N.Daskalakis, A.Georgiadis, M.M.Tentzeris, G.Goussetis and G.Deligeorgis, “The New Era of Long-Range “Zero-Interception” Ambient Backscattering Systems: 130m with 130nA Front-End Consumption”, Sensors, Vol.22, No.11, Article 4151, May 2022.
288. X.He, K.Hu, Y.Cui, R.Bahr, B.Tehrani and M.M.Tentzeris, “Additively Manufactured “Smart” RF Packaging Structures: A Quantum-Leap for On-Demand Customizable Integrated 5G and IoT Modules”, IEEE Microwave Magazine, Vol.23, No.8, pp.94-106, August 2022, doi: 10.1109/MMM.2022.3173479.
289. Y.Cui, R.Bahr, S.A.Nauroze, T.S.Almoneef and M.M.Tentzeris, “3D Printed "Kirigami"-Inspired Deployable Bi-Focal Beam-Scanning Dielectric Reflectarray Antenna for mm-Wave Applications”, IEEE Transactions on Antennas and Propagation, Vol.70, No.9, Sensors, Vol.22, No.11, pp.7683-7690, September 2022, doi: 10.1109/TAP.2022.3199501.
290. L.Portilla, K.Loganathan, H.Faber, A.Eid, J.G.D.Hester, M.M.Tentzeris, M.Fattori, E.Cantatore, C.Jiang, A.Nathan, G.Fiori, T. Ibn-Mohammed and T.D.Anthopoulos, “Wirelessly powered large-area electronics for the Internet of Things”, Nature Electronics, https://doi.org/10.1038/s41928-022-00898-5, p.10-17, December 2022.
291. M.Wagih, L.Balocchi, F.Benassi, N.B.Carvalho, J.-C.Chiao, R.Correia, A.Costanzo, Y.Cui, D.Georgiadou, C.Gouveia, J.Grosinger, J.S.Ho, K.Hu, A.Komolafe, S.Lemey, C.Loss, G.Marrocco, P.Mitcheson, V.Palazzi, N.Panunzio, G.Paolini, P.Pinho, J.Preishuber-Pfluegl, Y.Qaragoez, H.Rahmani, H.Rogier, J.R.Lopera, L.Roselli, D.Schreurs, M.M.Tentzeris, R.Torah, R.Torres, P.Van Torre, D.Vital and S.Beeby, “Microwave-Enabled Wearables: Underpinning Technologies, Integration Platforms, and Next-Generation Roadmap”, IEEE Journal on Microwaves, Vol.3, No.1, pp.193-226, January 2023, doi: 10.1109/JMW.2022.3223254.
292. C.Lynch, A.O.Adeyeye, A.Eid, J.G.D.Hester and M.M.Tentzeris, “5G/mm-Wave Fully-Passive Dual Rotman Lens-Based Harmonic mmID for Long Range Microlocalization Over Wide Angular Ranges”, IEEE Transactions on Microwave Theory and Techniques, Vol.71, No.1, pp.330-338, January 2023, doi: 10.1109/TMTT.2022.3227925.

293. W.Choi, A.Georgiadis, M.M.Tentzeris and S.Kim, “Analysis of Exponential Frequency-Diverse Array for Short-Range Beam-Focusing Technology”, IEEE Transactions on Antennas and Propagation, Vol.71, No.2, pp.1437-1447, February 2023, doi: 10.1109/TAP.2022.3226155.
294. K.Niotaki, N.B.Cavalho, A.Georgiadis, X.Gu, S.Hemour, K.Wu, D.Matos, D.Belo, R.Pereira, R.Figueiredo, H.Chaves, B.Mendes, R.Correia, A.Oliveira, V.Palazzi, F.Alimenti, P.Mezzanotte, L.Roselli, F.Benassi, A.Costanzo, D.Masotti, G.Paolini, A.Eid, J.Hester, M.M.Tentzeris and N.Shinohara, “RF Energy Harvesting and Wireless Power Transfer for Energy Autonomous Wireless Devices and RFIDs”, IEEE Journal on Microwaves, Vol.3, No.2, pp.763-782, April 2023, doi: 10.1109/JMW.2023.3255581.
295. M.E.Holda, G.E.Ponchak and E.M.Tentzeris, “Coplanar Stripline Single Pole Single Throw Switch”, IEEE Microwave and Wireless Technology Letters, Vol.33, No.6. pp.671-674, June 2023, doi: 10.1109/LMWT.2023.3240658.
296. K.Hu, T.W.Callis and M.M.Tentzeris, “Additively Manufactured Flexible On-Package Phased Antenna Arrays with Integrated Microfluidic Cooling Channels for 5G/mmWave System-On-Package Designs”, IEEE Microwave and Wireless Technology Letters, Vol.33, No.6, pp.899-902, June 2023, doi: 10.1109/LMWT.2023.3268237.
297. K.Hu, Y.Zhou, S.K.Sitaraman and M.M.Tentzeris, “Additively manufactured flexible on-package phased array antennas for 5G/mmWave wearable and conformal digital twin and massive MIMO applications”, Nature Scientific Reports, No.13:12515, https://doi.org/10.1038/s41598-023-39476-w, August 2023.
298. Y.Fang, H.Zou, S.Peng, G.Dong and M.M.Tentzeris, “Full and In Situ Printing of Nanogenerators that Are Based on an Inherently Viscous Piezoelectric Polymer: An Effort to Minimize “Coffee Ring Effect” and Nonprinting Operations”, ACS Applied Electronic Materials, pp.4157-4167, August 2023.
299. D.P.Lynch, M.M.Tentzeris, V.Fusco and S.D.Assimonis, “Super Realized Gain Antenna Array”, Applied Physics, https://doi.org/10.48550/arXiv.2309.09889, September 2023.
300. M.E.Holda, C.Lynch and M.M.Tentzeris, “Additively Manufactured Magic Cube Platforms for Fully Integrated Wireless Sensing Nodes for Internet of Things Applications”, Nature Scientific Reports, No.13:21736, https://doi.org/10.1038/s41598-023-49130-0, December 2023.
301. C.A.Lynch, G.Soto-Valle, J.G.D.Hester and M.M.Tentzeris, “At the Intersection Between Optics and mmWave Design: An Energy Autonomous 5G-Enabled Multilens-Based Broadbeam mmID for "Smart" Digital Twins Applications”, IEEE Transactions on Microwave Theory and Techniques, Vol.72, No.4, April 2024, doi: 10.1109/TMTT.2023.3344538.
302. C.Lynch, A.Adeyeye, El Mehdi Abbara, A.Umar, M.Alhendi, C.Minnella, J.Iannotti, N.Stoffel, M.Poliks & M.M.Tentzeris, “5G-enabled, Battery-less Smart Skins for Self-monitoring Megastructures and Digital Twin Applications”, Nature Scientific Reports, No.14:10002, https://doi.org/10.1038/s41598-024-58257-7, May 2024.
303. H.Jeong, N.Ha, A.Georgiadis, M.M.Tentzeris and S.Kim, “Polarization Diversity and Transfer Learning-Based Modulation Optimization for High-Speed Dual Channel MIMO Backscatter Communication”, IEEE Journal on Internet of Things, Vol.11, No.12, pp.21857-21871, June 2024, doi: 10.1109/JIOT.2024.3379854.

304. V.Palazzi, F.Alinenti, P.Mezzanotte, M.M.Tentzeris and L.Roselli, “Passive Wireless Vibration Sensors based on the Amplitude Modulation of Harmonic Backscattering”, IEEE Transactions on Microwave Theory and Techniques, Vol.72, No.6, pp.3841-3853, June 2024, doi: 10.1109/TMTT.2023.3330759.
305. E.Celenk, C.Lynch and M.M.Tentzeris, “An Ultra-Wideband All-Textile Metamaterial Absorber for Ku, K and Ka band Applications”, IEEE Antennas and Wireless Propagation Letters, Vol.23, No.6, pp.1789-1793, June 2024, doi: 10.1109/LAWP.2024.3369971.
306. H.Al Jamal, C.Hu, N.Wille, K.Zeng and M.M.Tentzeris, “Beyond Planar: An Additively Manufactured, Origami-Inspired Shape-Changing, and RFIC-Based Phased Array for Near-Limitless Radiation Pattern Reconfigurability in 5G/mm-Wave Applications”, IEEE Microwave and Wireless Technology Letters, Vol.34, No.6, pp.841-844, June 2024, doi: 10.1109/LMWT.2024.3396026.
307. Y. Zhou, J. H. Chow, M. M. Tentzeris and S. K. Sitaraman, "Experimental and Modeling Study of RF Performance of a Screen-Printed Coplanar Waveguide (CPW) up to 20 GHz Under Monotonic Stretching”, IEEE Transactions on Components, Packaging and Manufacturing Technology, vol. 14, no. 7, pp. 1227-1239, July 2024, doi: 10.1109/TCPMT.2024.3409526
308. K. Hu, Y. Zhou, S. K. Sitaraman and M. M. Tentzeris, "Flexible/Conformal Inkjet-Printed 3-D “Ramp” Interconnects for 5G/mmWave System-on-Package Designs and Wearable Applications”, IEEE Transactions on Components, Packaging and Manufacturing Technology, vol. 14, no. 8, pp. 1329-1336, August 2024, doi: 10.1109/TCPMT.2024.3424277
309. T.-H.Lin, W.Su, Y.Cui, R.Bahr and M.M.Tentzeris, “Battery-less long-range wireless fluidic sensing system using flexible additive manufacturing ambient energy harvester and microfluidics”, Nature Scientific Reports, No.14:17787, https://doi.org/10.1038/s41598-024-68616-z, August 2024.
310. Y. Yang, Z.Yin, X.Zhu, H.Al Jamal, X.Lv, K.Hu, M.Joshi, N.Wille, M.Li, B.Zhang, Z.Luo, S.Magdassi and M.Tentzeris, "A Review of Multimaterial Additively Manufactured Electronics and 4-D Printing/Origami Shape-Memory Devices: Design, Fabrication, and Implementation”, Proceedings of the IEEE, vol. 112, no. 8, pp. 954-999, August 2024, doi: 10.1109/JPROC.2024.3471849.
311. V. Palazzi, F.Alimenti, L.Pierantozzi, M.Ribeca, L.Balocchi, L.Valentini, S.B.Bon, P.Mezzanotte, M.M,Tentzeris and L.Roselli, "Room-Temperature Selective-Metallization Processes Applied to 3-D-Printed and Flexible Materials for Wireless Sensing”, Proceedings of the IEEE, vol. 112, no. 8, pp. 1065-1090, August 2024, doi: 10.1109/JPROC.2024.3481315.
312. D. P. Lynch, M. M. Tentzeris, V. Fusco and S. D. Asimonis, "Super Realized Gain Antenna Array", IEEE Transactions on Antennas and Propagation, vol. 72, no. 9, pp. 7030-7040, September 2024, doi: 10.1109/TAP.2024.3437218
313. M. Joshi, C. A. Lynch, K. Hu, G. Soto-Valle and M. M. Tentzeris, "A Fully-Passive Frequency Diverse Lens-Enabled mmID for Precise Ranging and 2-Axis Orientation Detection in Next-Generation IoT and Cyberphysical Systems”, IEEE Journal of Radio Frequency Identification, vol. 8, pp. 788-800, October 2024, doi: 10.1109/JRFID.2024.3477919
314. M. Joshi, K. Hu, C. A. Lynch, Y. Cui, G. Soto-Valle and M. M. Tentzeris, "Computer Vision Enabled Calibration of Additively Manufactured Conformal Phased Arrays Utilizing 3-D Depth Sensing Camera”, IEEE Transactions on Microwave Theory and Techniques, vol. 72, no. 11, pp. 6728-6738, Nov. 2024, doi: 10.1109/TMTT.2024.3396412

315. M. Joshi, K. Hu, C. A. Lynch and M. M. Tentzeris, "Achieving Quasi-Planar Coverage: A Concave Meniscus Lens-Enhanced Rotman Lens Based mmID for Ultra-Long Range IoT Applications", accepted for publication in IEEE Antennas and Wireless Propagation Letters, doi: 10.1109/LAWP.2024.3514914
316. H. Al Jamal, C. Hu, E. Kwao, K. Zeng and M. M. Tentzeris, "Toward 5G/mm-Wave Shape-Changing Origami-Inspired Phased Arrays for Near-Limitless Arbitrarily Reconfigurable Radiation Patterns: Realization, Actuation, and Calibration", IEEE Transactions on Microwave Theory and Techniques, vol.73, no.1, pp.397-411, January 2025, doi: 10.1109/TMTT.2024.3463484
317. I. . -T. Chen, C. A. Lynch, A. Eid, J. G. D. Hester, K. Zeng and M. M. Tentzeris, "Additively Manufactured Semipassive Rotman Lens-Based RIS-Assisted mmID Tag System for Beyond-5G Wireless Networks in Complex Environments", IEEE Transactions on Microwave Theory and Techniques, vol.73, no.1, pp.650-660, January 2025, doi: 10.1109/TMTT.2024.3422386
318. S. A. Alotaibi, Y. Cui and M. M. Tentzeris, "Tapered CSRR Based Sensor for Relative Permittivity Measurement with Application to Biomedical Microfluidic Sensing", accepted for pubication in IEEE Access, doi: 10.1109/ACCESS.2024.3521431

IV.B.2. Selected Refereed Conference Publications

1. E.Tentzeris, N.Dib, L.P.B.Katehi, J.Oswald and P.Siegel, "Time-Domain Characterization of Diode-Mounting Structures", Proc. of the Fifth International Symposium on Space Terahertz Technology, pp.720-727, Ann Arbor, MI, May 1994.
2. T.P.Budka, E.Tentzeris, S.Waclawik, N.Dib, L.P.B. Katehi and G.M.Rebeiz, "An Experimental and Theoretical Comparison of the Electric Fields above a Coupled Line Bandpass Filter", Proc. of the 1995 IEEE Symposium on Microwave Theory and Techniques, pp.1487-1490, Orlando, FL, May 1995.
3. E.Tentzeris, M.Krumpholz, N.Dib, L.P.B. Katehi, "A Waveguide Absorber Based on Analytical Green's Function", Proc. of the 1995 European Microwave Conference, pp.251-254, Bologna, ITALY, September 1995.
4. M.Krumpholz, E.Tentzeris, R.Robertson and L.P.B. Katehi, "Time Domain Analysis of Microwave Structures by MRTD", Proc. of the 1996 ACES (Applied Computational Electromagnetics Society) Symposium, pp.1303-1309, Monterey, CA, March 1996.
5. E.Tentzeris, M.Krumpholz and L.P.B. Katehi, "Application of MRTD to Printed Transmission Lines", Proc. of the 1996 IEEE Symposium on Microwave Theory and Techniques, pp.573-576, San Francisco, CA, June 1996.
6. R.Robertson, E.Tentzeris, M.Krumpholz and L.P.B. Katehi, "MRTD Analysis of Dielectric Cavity Structures", Proc. of the 1996 IEEE Symposium on Microwave Theory and Techniques, pp.1861-1864, San Francisco, CA, June 1996.

7. K.Goverdhanam, E.Tentzeris, M.Krumpholz and L.P.B. Katehi, "An FDTD Multigrid based on Multiresolution Analysis", Proc. of the 1996 IEEE AP-S (Antennas and Propagation Society) Microwave Conference, pp.352-355, Baltimore, MD, July 1996.
8. E.Tentzeris, R.Robertson, M.Krumpholz and L.P.B. Katehi, "Application of the PML Absorber to the MRTD Technique", Proc. of the 1996 IEEE AP-S (Antennas and Propagation Society) Microwave Conference, pp.634-637, Baltimore, MD, July 1996.
9. E.Tentzeris, A.Cangellaris and L.P.B.Katehi, "Space/Time Adaptive Meshing and Multiresolution Time-Domain Techniques", Invited Paper in the 1997 ACES (Applied Computational Electromagnetics Society) Conference, pp.1509-1514, Monterey, CA, March 1997.
10. E.Tentzeris, R.Robertson, A.Cangellaris and L.P.B.Katehi, "Space- and Time-Adaptive Gridding Using MRTD", Proc. of the 1997 IEEE Symposium on Microwave Theory and Techniques, pp.337-340, Denver, CO, June 1997.
11. R.Robertson, E.Tentzeris and L.P.B.Katehi, "Modeling of Membrane Patch Antennas Using MRTD Analysis", Proc. the 1997 IEEE AP-S (Antennas and Propagation Society) Microwave Conference, pp.126-129, Montreal, Canada, July 1997.
12. E.Tentzeris, J.Harvey and L.P.B.Katehi, "Time Adaptive Time Domain Techniques for the Design of Microwave Circuits", Invited Paper in the 1997 IEEE AP-S (Antennas and Propagation Society) Microwave Conference, pp.1476-1479, Montreal, CANADA, July 1997.
13. R.Robertson, E.Tentzeris and L.P.B.Katehi, "Analysis of Antenna Structures by Use of MRTD", Proc. of the 1997 NATO Advanced Study Institute on Applied Computational Electromagnetics, Samos, GREECE, August 1997.
14. E.Tentzeris and L.P.B.Katehi, "Time-Domain Schemes Using Multiresolution Expansion", Invited Paper in the 1997 NATO Advanced Study Institute on Applied Computational Electromagnetics, Samos, GREECE, August 1997.
15. G.Ponchak, E.Tentzeris and L.P.B.Katehi, "Coupling between Adjacent Finite Ground Coplanar Waveguides", Proc. ISHM 1997 Int. Symp. on Microelectronics, pp.7-10, Philadelphia, PA, October 1997. ***Best Paper Award by the International Hybrid Microelectronics and Packaging Society.***
16. K.Goverdhanam, E.Tentzeris and L.P.B.Katehi, "Modelling of Boundary Conditions at the Haar Multigrid", Proc. of the 1998 ACES (Applied Computational Electromagnetics Society) Conference, pp.127-134, Monterey, CA, March 1998.
17. E.Tentzeris, R.Robertson and L.P.B.Katehi, "PML Implementation for the Battle-Lemarie MRTD Schemes", Invited Paper in the 1998 ACES (Applied Computational Electromagnetics) Conference, pp.647-654, Monterey, CA, March 1998.

18. E.Tentzeris and L.P.B.Katehi, “Space Adaptive Analysis of Evanescent Waveguide Filters”, Proc. Of the 1998 IEEE Symposium on Microwave Theory and Techniques, pp.481-484, Baltimore, MD, June 1998.
19. L.Roselli, E.Tentzeris and L.P.B.Katehi, “Nonlinear Circuit Characterization Using a Multiresolution Time-Domain Technique”, Proc. of the 1998 IEEE Symposium on Microwave Theory and Techniques, pp.1387-1390, Baltimore, MD, June 1998.
20. R.Robertson, E.Tentzeris, T.Ellis and L.P.B.Katehi, “Characterization of a MS-CPW Transition for Antenna Applications”, Proc. of the 1998 IEEE AP-S (Antennas and Propagation Society) Conference, pp.1380-1383, Atlanta, GA, June 1998.
21. E.Tentzeris, R.Robertson, J.Harvey and L.P.B.Katehi, “Application of the Multiresolution Time-Domain Technique (MRTD) to Microwave Circuits and Antennas Problems”, Invited Paper in the 1998 European Microwave Conference, Amsterdam, THE NETHERLANDS, October 1998.
22. G.E.Ponchak, L.P.B.Katehi and E.M.Tentzeris, “Finite Ground Coplanar (FGC) Waveguide: Its Characteristics and Advantages for Use in RF and Wireless Communication Circuits”, Invited Paper in the 3rd International Wireless Communications Conference (WCC ’98) Digest, pp.75-83, San Diego, CA, November 1998.
23. R.L.Robertson, E.M.Tentzeris and L.P.B.Katehi, “Analysis of Micromachined Dielectric Transitions using MRTD”, Proc. of the 1999 IEEE International Microwave Symposium, pp.1463-1466, Anaheim, CA, June 1999.
24. L.P.B.Katehi, E.M.Tentzeris and J.Harvey, “Multiresolution-Time Domain Analysis (MRTD) of High-Frequency Circuits Including Non-linear Elements”, Invited Paper in the General Assembly of URSI (International Union of Radio Science) 1999, p.694, Toronto, CANADA, August 1999.
25. E.M.Tentzeris, “Analysis and Design of RF Circuits Including Non-linear Elements, using MRTD”, Proc. of the 54th ARFTG (Automatic RF Techniques Group) Conference, pp.38-40, Atlanta, GA, December 1999.
26. E.M.Tentzeris, “Computational Optimization of MRTD Haar-based Adaptive Schemes used for the Design of RF Packaging Structures”, Invited Paper in the ACES (Applied Computational Electromagnetics) 2000, pp.548-555, Monterey, CA, March 2000.
27. G.E.Ponchak and E.M.Tentzeris, “Development of Finite Ground Coplanar (FGC) Waveguide 90 Degree Crossover Junctions with Low Coupling”, Proc. of the 2000 IEEE IMS (International Microwave Symposium), pp.III.1891-1894, Boston, MA, June 2000.
28. N.Bushyager and E.M.Tentzeris, “Characterization of Micromachined Transmission Lines Using MRTD”, Proc. of the 2000 IEEE IMS (International Microwave Symposium), pp.251-254, Boston, MA, June 2000.

29. A.Sutono, N.G.Cafaro, J.Laskar and E.M.Tentzeris, “Experimental Study and Modeling of Microwave Bond Wire Interconnects”, Proc. of the 2000 IEEE AP-S (Antennas and Propagation) Symposium, pp.IV.2020-2023, Salt Lake City, UT, July 2000.
30. M.Swaminathan and M.Tentzeris, “Design Issues in the Packaging of Heterogeneous Systems”, Proc. of the 2000 IEEE AP-S (Antennas and Propagation) Symposium, pp.II.592-595, Salt Lake, UT, July 2000.
31. B.McGarvey, D.Staiculescu, E.M.Tentzeris and J.Laskar, “Adaptive Modeling of Complex Packaging Geometries Using Haar-based MRTD Algorithms”, Proc. of the 2000 European Microwave Conference, pp.413-416 (Vol.I), Paris, FRANCE, October 2000.
32. J.Laskar, E.M.Tentzeris, A.Sutono, H.Liang, N.Bushyager and K.Lim, “Next Generation Packaging Architectures for Highly Integrated Wireless Systems”, Proc. of the 2000 European Microwave Conference, pp.136-139 (Vol.III), Paris, FRANCE, October, 2000.
33. D.Staiculescu, J.Laskar and E.M.Tentzeris, “Flip Chip Design Rule Development for Multiple Signal and Ground Bump Configurations”, Proc. of the 2000 IEEE Asia-Pacific Microwave Conference, pp.136-139, Sydney, Australia, December 2000.
34. N.Bushyager, B.McGarvey and E.M.Tentzeris, “Adaptive Numerical Modeling of RF Structures Requiring the Coupling of Maxwell’s, Mechanical and Solid-State Equations”, Invited Paper in the 2001 ACES (Applied Computational Electromagnetics Society) Conference, pp.1-6, Monterey, CA, March 2001. ***Best Paper Award ACES 2001***
35. N.Bushyager and M.Tentzeris, “Modeling and Design of RF MEMS Structures Using Computationally Efficient Numerical Techniques”, Proc. of the 2002 IEEE Electronic Components and Technology Conference (ECTC), pp.327-330, Orlando, FL, May 2001.
36. D.Heo, A.Sutono, E.Chen, E.Gebara, S.Yoo, Y.Suh, J.Laskar, E.Dalton and M.Tentzeris, “A High-Efficiency 0.25-umCMOS PA with LTCC Multi-Layer High-Q Integrated Passives for 2.4 GHz ISM Band”, Proc. of the 2001 IEEE International Microwave Symposium, pp.II.915-918, Phoenix, AZ, May 2001.
37. G.E.Ponchak, E.M.Tentzeris and J.Papapolymerou, “Coupling Between Microstrip Lines Embedded in Polyimide Layers for 3D-MMICs on Si”, Proc. of the 2001 IEEE International Microwave Symposium, pp.III.1723-1726, Phoenix, AZ, May 2001.
38. N.Bushyager, E.M.Tentzeris, L.Gatewood and J.DeNatale, “A Novel Adaptive Approach to Modeling MEMS Tunable Capacitors Using MRTD and FDTD Techniques”, Proc. of the 2001 IEEE International Microwave Symposium, pp.2003-2006, Phoenix, AZ, May 2001.

39. N.Bushyager and E.M.Tentzeris, “Modeling and Design of RF MEMS Structures Using Computationally Efficient Numerical Techniques”, Invited Paper in the 2001 Electronic Components and Technology Conference, pp.324-327, Lake Buena Vista, FL, May 2001.
40. N.Bushyager and E.M.Tentzeris, “RF MEMS: Development of Design Rules”, Proc. of the 2001 Interpack (Pacific Rim/International, Intersociety, Electronic Packaging Technical Conference), Kauai, HI, July 2001.
41. N.Bushyager, A.Obatoyinbo, E.M.Tentzeris and J.Laskar, “Multilayer Package Modeling Using the Multiresolution Time-Domain Technique”, Proc. of the 2001 IEEE AP-S (Antennas and Propagation Society) Symposium, pp.IV.806-809, Boston, MA, July 2001.
42. A.Sutono, C.Lee, A.Obatoyinbo, K.Lim, E.M.Tentzeris and J.Laskar, “Development of Highly Integrated 3D Microwave-MillimeterWave Radio Front-End System-on-Package (SOP)”, Invited Paper in the 2001 European GaAs Conference, pp.235-238, London, England, September 2001.
43. B.McGarvey and E.M.Tentzeris, “Coupling of Solid-State and Electromagnetic Equations for Simulation of Wireless Packaged Geometries”, Proc. of the 2001 European Microwave Symposium, pp.I.217-220, London, England, September 2001.
44. G.E.Ponchak, J.Papapolymerou and E.M.Tentzeris, “Coupling Between Finite Ground Coplanar Waveguides Embedded in Polyimide Layers for 3D-MMICs on Si”, Proc. of the 2001 European Microwave Symposium, pp.I.25-28, London, England, September 2001.
45. J.Laskar, A.Sutono, C.-H.Lee, M.Davis, M.Maeng, N.Lal, K.Lim, S.Pinel, M.Tentzeris and A.Obatoyinbo, “Development of Integrated 3D Radio Front-end System-on-Package (SOP)”, Proc. 2001 Gallium Arsenide Integrated Circuit (GaAs IC) Symposium, pp.215-218, Monterey, CA, October 2001.
46. B.McGarvey, R.Cicconetti, N.Bushyager, E.Dalton and E.M.Tentzeris, “Beowulf Cluster Design for Scientific PDE Models”, Proc. of the 2001 Annual Linux Showcase, Oakland, CA, November 2001.
47. N.Bushyager, M.Davis, E.Dalton, J.Laskar and M.Tentzeris, “Q-Factor Prediction and Optimization of Multilayer Inductors for RF Packaging Microsystems Using Time-Domain Techniques”, Proc. of the 2002 IEEE Electronic Components and Technology Conference (ECTC), pp.1718-1721, San Diego, CA, May 2002.
48. N.Bushyager, K.Lange, E.M.Tentzeris and J.Papapolymerou, “Modeling and Optimization of RF-MEMS Reconfigurable Tuners with Computationally Efficient Time-Domain Techniques”, Proc. Of the 2002 IEEE International Microwave Symposium, pp.II.883-886, Seattle, WA, June 2002.
49. M.F.Davis, S.-W.Yoon, S.Mandal, N.Bushyager, M.Maeng, K.Lim, S.Pinel, A.Sutono, J.Laskar, M.Tentzeris, T.Nonaka, V.Sundaram, F.Liu and R.Tummala, “RF/Microwave Multiband Design Solutions for Multilayer Organic System-on-

Package Integrated Passives", Proc. of the 2002 IEEE International Microwave Symposium, pp.III.2217-2220, Seattle, WA, June 2002.

50. S.Pinel, S.Chakraborty, M.Roellig, R.Kunze, S.Mandal, H.Liang, C.-H.Lee, R.Li, K.Lim, G.White, M.Tentzeris and J.Laskar, "3D Integrated LTCC Module Using uBGA Technology for Compact C-band RF Front-end Module", Proc. of the 2002 IEEE International Microwave Symposium, pp.III.1553-1556, Seattle, WA, June 2002.
51. G.E.Ponchak, E.Dalton, E.M.Tentzeris and J.Papapolymerou, "Coupling Between Microstrip Lines with Finite Ground Planes Embedded in Polyimide Layers for 3D-MMICs on Si", Proc. of the 2002 IEEE International Microwave Symposium, pp.III.2221-2224, Seattle, WA, June 2002.
52. J.Papapolymerou, G.E.Ponchak and E.M.Tentzeris, "A Wilkinson Power Divider on a Low-Resistivity Si Substrate with a Polyimide Interface Layer for Wireless Circuits", Proc. of the 2002 IEEE International Microwave Symposium, pp.I.593-596, Seattle, WA, June 2002.
53. A.Bacon, G.E.Ponchak, J.Papapolymerou, N.Bushyager andM.Tentzeris, "Folded CoplanarWaveguide Slot Antenna on Silicon Substrates with a Polyimide Interface Layer", Proc. of the 2002 IEEE Antennas and Propagation Symposium, pp.II.432-435, San Antonio, TX, June 2002.
54. R.L.Li, E.Tsai, G.DeJean, M.Tentzeris and J.Laskar, "Novel Small Folded Shorted-Patch Antennas", Proc. of the 2002 IEEE Antennas and Propagation Symposium, pp.IV.26-29, San Antonio, TX, June 2002.
55. R.L.Li, K.Lim, M.Maeng, E.Tsai, G.DeJean, M.Tentzeris and J.Laskar, "Design of Compact Stacked-Patch Antennas on LTCC Technology for Wireless Communication Applications", Proc. of the 2002 IEEE Antennas and Propagation Symposium, pp.II.500-503, San Antonio, TX, June 2002.
56. G.Zheng, S.Pinel, K.Lim, R.Li, M.Tentzeris, J.Papapolymerou and J.Laskar, "Design of Compact RF Components for Low-Cost High-Performance Wireless Front-Ends", Proc. of the 2002 ICMMT, pp.259-262, Beijing, CHINA, August 2002.
57. S.Pinel, K.Lim, M.Maeng, M.F.Davis, R.Li, M.Tentzeris and J.Laskar, "RF System-on-Package (SOP) Development for Compact Low CostWireless Front-end Systems", Proc. of the 2002 European Microwave Symposium, pp.I.61-64, Milan, ITALY, September 2002.
58. G.E.Ponchak, E.Dalton, A.Bacon, J.Papapolymerou andM.Tentzeris, "Measured Propagation Characteristics of Finite-Ground Coplanar Waveguide on Silicon with a Thick Polyimide Interface Layer", Proc. of the 2002 European Microwave Symposium, pp.I.167-170, Milan, ITALY, September 2002.
59. E.M.Tentzeris, "Adaptive modeling and design of highly integrated 3D microwave-millimeter wave radio front-ends", Proc. 2002 Gallium Arsenide Integrated Circuit (GaAs IC) Symposium, pp.109-112, Monterey, CA, October 2002.

60. M.Tentzeris, N.Bushyager, R.L.Li, K.Lim, M.Davis, S.Pinel, J.Laskar, E.Zheng and J.Papapolymerou, "Analysis of MEMS and Embedded Components in Multilayer Packages Using FDTD/MRTD for System-on-Package Applications", Proc. 2002 Asian-Pacific Microwave Symposium, pp.I.554-557, Kyoto, JAPAN, November 2002.
61. E.Y.Tsai, A.M.Bacon, M.Tentzeris and J.Papapolymerou, "Design and Development of Novel Micromachined Patch Antennas for Wireless Applications", Proc. 2002 Asian-Pacific Microwave Symposium, pp.II.821-824, Kyoto, JAPAN, November 2002.
62. M.Kuroda, N.Miura and M.Tentzeris, "A Novel Time-Domain Technique for the Analysis of MEMS-Based Variable Capacitors with Moving Metallic Parts", Proc. 2002 Asian-Pacific Microwave Symposium, pp.III.1208-1211, Kyoto, JAPAN, November 2002.
63. J.Laskar, M.Tentzeris, K.Lim, S.Pinel, M.Davis, A.Raghavan, M.Maeng, S.-W.Yoon and R.Tummala, "Advanced System-on-Package RF Front-ends for Emerging Wireless Communications", Proc. 2002 Asian-Pacific Microwave Symposium, pp.III.1703-1708, Kyoto, JAPAN, November 2002.
64. N.Bushyager and M.Tentzeris, "Intracell Modeling of Metal/Dielectric Interfaces for EBG/MEMS RF Structures Using the Multiresolution Time-Domain Technique", Invited Paper in the ACES (Applied Computational Electromagnetics) 2003, pp.403-407, Monterey, CA, March 2003.
65. J.Lee, E.T.K.Dalton, N.Bushyager, M.Kunze, W.Heinrich and M.Tentzeris, "Coupling of Electromagnetic Time-Domain Simulators with DSP/Subgridding Techniques for the Adaptive Modeling of Wireless Packaging Structures", Invited Paper in the ACES (Applied Computational Electromagnetics) 2003, pp.579-584, Monterey, CA, March 2003.
66. M.Kuroda, N.Miura and M.M.Tentzeris, "A Novel Numerical Approach for the Analysis of 2D MEMS-Based Variable Capacitors with Motion to Arbitrary Directions", Proc. of the ACES (Applied Computational Electromagnetics) 2003, pp.48-53, Monterey, CA, March 2003.
67. M.Al-Ahmad, F.Coccetti, M.Tentzeris and P.Russer, "Parametric Model Generation Algorithm for Planar Microwave Structures Based on Full-Wave Analysis and Design of Experiment", Proc. of the ACES (Applied Computational Electromagnetics) 2003, pp.751-756, Monterey, CA, March 2003.
68. R.L.Li, G.DeJean, M.Tentzeris and J.Laskar, "Integration of Miniaturized Patch Antennas with High Dielectric Constant Multilayer Packages and Soft-and-Hard Surfaces (SHS)", Proc. of the 2003 IEEE Electronic Components and Technology Conference (ECTC), pp.474-477, New Orleans, LA, May 2003.
69. E.T.K.Dalton, M.Kunze, W.Heinrich and M.M.Tentzeris, "Accurate Modeling of Multilayer Packaging Structures with a Hybrid FDTD Method", Proc. of the 2003 IEEE Electronic Components and Technology Conference (ECTC), pp.1028-1031, New Orleans, LA, May 2003.

70. N.Bushyager, L.Martin, S.Khushrushahi, S.Basat and M.Tentzeris, “Design of RF and Wireless Packages Using Fast Hybrid Electromagnetic/Statistical Methods”, Proc. of the 2003 IEEE Electronic Components and Technology Conference (ECTC), pp.1546-1549, New Orleans, LA, May 2003.
71. D.Thompson, P.Kirby, J.Papapolymerou and M.Tentzeris, “W-Band Characterization of Finite-Ground Coplanar Transmission Lines on Liquid Crystal Polymer (LCP) Substrate”, Proc. of the 2003 IEEE Electronic Components and Technology Conference (ECTC), pp.1652-1655, New Orleans, LA, May 2003.
72. N.Bushyager, M.M.Tentzeris and J.Papapolymerou, “Electromagnetic Band-Gap Structure Design Using a Composite-Cell Multiresolution Time-Domain Technique”, Proc. of the 2003 IEEE-IMS Symposium, pp.2081-2084, Philadelphia, PA, June 2003.
73. M.Fujii, M.M.Tentzeris and P.Russer, “Performance of Nonlinear Dispersive APML in High-Order FDTD Schemes”, Proc. of the 2003 IEEE-IMS Symposium, pp.1129-1132, Philadelphia, PA, June 2003.
74. M.Kuroda, N.Miura, K.Kawano and M.M.Tentzeris, “Numerical Modeling of the Transient Behavior of MEMS Structures Involving Motion in Arbitrary Directions”, Proc. of the 2003 IEEE-APS Symposium, pp.I.359-362, Columbus, OH, June 2003.
75. L.Pierantoni, M.Farina, T.Rozzi, F.Coccetti, P.Russer, N.Bushyager and M.M.Tentzeris, “Comparison of Electromagnetic Solvers for the Analysis of LTCC Components”, Proc. of the 2003 IEEE-APS Symposium, pp.I.733-736 Columbus, OH, June 2003.
76. R.Li, G.DeJean, M.Tentzeris, J.Laskar and J.Papapolymerou, “LTCC Multilayer Based CP Patch Antenna Surrounded by a Soft-and-Hard Surface for GPS Applications”, Proc. of the 2003 IEEE-APS Symposium, pp.II.651-654, Columbus, OH, June 2003.
77. R.Li, G.DeJean, M.Tentzeris and J.Laskar, “Novel Multiband Broadband Planar Wire Antennas for Wireless Communication Handheld Terminals”, Proc. of the 2003 IEEE-APS Symposium, pp.III.44-47, Columbus, OH, June 2003.
78. N.Bushyager and M.M.Tentzeris, “Modeling of intracell metallic elements using the MRTD Technique”, Proc. of the 2003 IEEE-APS Symposium, pp.I.354-355, Columbus, OH, June 2003.
79. M.M.Tentzeris and J.Laskar, “RF System-on-PAkage (SOP) Development for Compact Low-Cost Wireless Front-End Systems”, Proc. of the 2003 Interpack Conference and Exhibition, pp.19-24, Maui, HI, July 2003.
80. D.Thompson, P.Kirby, J.Papapolymerou and M.Tentzeris, “W-Band Characterization of Finite-Ground Coplanar Transmission Lines on Liquid Crystal Polymer Substrates”, Invited Paper, 2003 GHz Interconnect Workshop, pp. 25-29, Sedona, AZ, September 21-24, 2003.

81. S.Pinel, K.Lim, G.DeJean, R.L.Li, C.-H.Lee, M.Maeng, M.F.Davis, M.Tentzeris and J.Laskar, "System-on-package (SOP) Architectures for Compact and Low-cost RF Front-end Modules", Proc. of the 2003 IEEE European Microwave Symposium, pp.I.307-310, Munich, GERMANY, October 2003.
82. G.Zheng, P.Kirby, A.Rodriguez, J.Papapolymerou, M.Tentzeris and L.Dunleavy, "Design and On-Wafer Measurement of a W-Band Via-Less CPW RF Probe Pad to Microstrip Transition", Proc. of the 2003 IEEE European Microwave Symposium, pp.I.443-446, Munich, GERMANY, October 2003.
83. N.Bushyager and M.Tentzeris, "Composite Cell MRTD Method for the Efficient Simulation of Complex Microwave Structures", Proc. of the 2003 IEEE European Microwave Symposium, pp.I.77-80, Munich, GERMANY, October 2003.
84. E.T.K.Dalton, M.Kunze, W.Heinrich and M.Tentzeris, "A Hybrid FDTD Quasistatic Technique for the Accurate Modeling of Complex Integrated RF Structures Including the Effects of Lossy Metals", Proc. of the 2003 IEEE European Microwave Symposium, pp.I.331-334, Munich, GERMANY, October 2003.
85. K.Lim, M.F.Davis, M.Maeng, S.-W.Yoon, S.Pinel, L.Wan, D.Guidotti, D.Ravi, J.Laskar, M.Tentzeris, V.Sundaram, G.White, M.Swaminathan, M.Brooke, N.Jokerst and R.Tummala, "Development of Intelligent Network Communicator for Mixed Signal Communications Using the System-on-a-Package (SOP) Technology", Proc. of the 2003 IEEE Asian Pacific Microwave Conference, pp.TD2-05, Seoul, KOREA, November 2003.
86. S.Pinel, K.Lim, G.DeJean, R.L.Li, C.-H.Lee, M.Maeng, M.F.Davis, M.Tentzeris and J.Laskar, "Advanced 3D Integrated and Low Cost RF Wireless Systems Using System-on-Package (SOP) Architectures", Proc. of the 2003 IEEE Asian Pacific Microwave Conference, pp.WA5-01, Seoul, KOREA, November 2003.
87. J.Lee, K.Lim, S.Pinel, G.DeJean, R.L.Li, C.-H.Lee, M.F.Davis, M.Tentzeris and J.Laskar, "Advanced System-on-Package (SOP)Multilayer Architectures for RF/Wireless Systems up to Millimeter-Wave Frequency Bands", Proc. of the 2003 IEEE Asian Pacific Microwave Conference, pp.FA5-01, Seoul, KOREA, November 2003.
88. N.Bushyager, D.Staiculescu, L.Martin, J.-H.Lee, N.Vasiloglou and M.M.Tentzeris, "Design and Optimization of 3D RF Modules, Microsystems and Packages Using Electromagnetic and Statistical Tools", Proc. of the 2004 IEEE-ECTC Symposium, pp.1412-1415, Las Vegas, NV, June 2004.
89. V.Palazzari, D.Thompson, N.Papageorgiou, S.Pinel, J.-H.Lee, S.Sarkar, R.Pratap, G.DeJean, R.Bairavasubramanian, R.L.Li, M.M.Tentzeris, J.Laskar, J.Papapolymerou and L.Roselli, "Multiband RF and mm-Wave Design Solutions for Integrated RF Functions in Liquid Crystal Polymer System-On-Package Technology", Proc. of the 2004 IEEE-ECTC Symposium, pp.1658-1663, Las Vegas, NV, June 2004.
90. V.Sundaram, R.Tummala, G.White, K.Lim, L.Wan, D.Guidotti, F.Liu, S.Bhattacharya, R.Pulugurtha, I.Abothu, R.Doraiswami, R.Pucha, J.Laskar,

M.M.Tentzeris, G.K.Chang, M.Swaminathan, "System-on-Package (SOP) Substrate and Module with Digital, RF and Optical Integration", Proc. of the 2004 IEEE-ECTC Symposium, pp.17-23, Las Vegas, NV, June 2004.

91. K.Lim, L.Wan, D.Guidotti, V.Sundaram, G.White, F.Liu, S.Bhatacharya, R.Doraiswami, Y.-J.Chang, J.Yu, S.Sarkar, R.Pratap, S.-W.Yoon, M.Maeng, S.Pinel, J.Laskar, M.M.Tentzeris, G.K.Chang, M.Swaminathan and R.Tummala, "System-on-a-Package (SOP) Module Development for Digital, RF and Optical Mixed Signal Integrated System", Proc. of the 2004 IEEE-ECTC Symposium, pp.1693-1697, Las Vegas, NV, June 2004.
92. N.Bushyager and M.M.Tentzeris, "Intracell Modeling of Lumped Elements Using the Composite-Cell MRTD Technique", Proc. of the 2004 IEEE-IMS Symposium, pp.1041-1044, Fort-Worth, TX, June 2004.
93. N.Bushyager, D.Staiculescu, A.Obatoyinbo and M.M.Tentzeris, "Optimization of 3D Multilayer RF Components using the Design of Experiments (DOE) Technique", Proc. of the 2004 IEEE-IMS Symposium, pp.1859-1862, Fort-Worth, TX, June 2004.
94. E.T.K.Dalton and M.M.Tentzeris, "A Hybrid FDTD/Quasistatic Technique for the Accurate Modeling of RF Loss Mechanisms", Proc. of the 2004 IEEE-IMS Symposium, pp.1709-1712, Fort-Worth, TX, June 2004.
95. S.Sarkar, V.Palazarri, G.Wang, N.Papageorgiou, D.Thompson, J.-H.Lee, S.Pinel, M.M.Tentzeris, J.Papapolymerou and J.Laskar, "RF and mm-Wave SOP Module Platform using LCP and RF MEMS Technologies", Proc.of the 2004 IEEE-IMS Symposium, pp.567-570, Fort-Worth, TX, June 2004.
96. B.Pan, Y.Yoon, P.Kirby, J.Papapolymerou, M.M.Tentzeris and M.Allen, "AW-band Surface Micromachined Monopole for Low-cost Wireless Communication Systems", Proc. of the 2004 IEEE-IMS Symposium, pp.1935-1938, Fort-Worth, TX, June 2004.
97. G.DeJean, R.L.Li, M.M.Tentzeris, J.Papapolymerou and J.Laskar, "Radiation-Pattern Improvement of Patch Antennas Using a Compact Soft/Hard Surface (SHS) Structure on LTCC Multilayer Technology", Student Paper Contest Finalist in the 2004 IEEE-APS Symposium, pp.317-320, Monterey, CA, June 2004.
98. R.L.Li, G.DeJean, M.M.Tentzeris and J.Laskar, "Integrable Miniaturized Folded Antennas for RFID Applications", Proc. of the 2004 IEEE-APS Symposium, pp.1431-1434, Monterey, CA, June 2004.
99. G.DeJean and M.M.Tentzeris, "Modeling and Optimization of Circularly-Polarized Patch Antennas Using the Lumped Element Equivalent Circuit Approach", Proc. of the 2004 IEEE-APS Symposium, pp.4432-4435, Monterey, CA, June 2004.
100. K.Kawano, T.Mori, M.Kuroda and M.M.Tentzeris, "Numerical Modeling of MEMS Structures Involving Motion Effected by the Coupling of Maxwell's and Mechanical

Equations", Proc. of the 2004 IEEE-APS Symposium, pp.2843-2846, Monterey, CA, June 2004.

101. N.Bushyager and M.M.Tentzeris, "Metamaterial Modeling Using Composite Cell MRTD Techniques", Proc. of the 2004 URSI Symposium, p.249, Monterey, CA, June 2004.
102. N.Vasiloglou, D.Staiculescu and M.M.Tentzeris, "Investigation of the Effect of Fractal Shapes on the Broadband Behavior of One-Dimensional Optimized Antennas", Proc. of the 2004 URSI Symposium, p.69, Monterey, CA, June 2004.
103. E.Gebara, M.M.Tentzeris and J.Laskar, "An Integrated CMOS Interference Canceller for MIMO Systems", Procs. of the 2004 7th European Conference on Wireless Technology, pp.137-140, Amsterdam, The Netherlands, October 2004, Best Paper Contest Finalist .
104. G.Wang, D.Thompson, M.M.Tentzeris and J.Papapolymerou, "Low Cost RF MEMS Switches Using LCP Substrate", Procs. of the 2004 European Microwave Symposium, pp.1441-1444, Amsterdam, The Netherlands, October 2004.
105. J.-H.Lee, G.DeJean, S.Sarkar, S.Pinel, K.Lim, J.Papapolymerou, M.M.Tentzeris and J.Laskar, "Advanced 3D LTCC System-on-Package (SOP) Architectures for Highly Integrated Millimeter-Wave Wireless Systems", Procs. of the 2004 European Microwave Symposium, pp.II.523-526, Amsterdam, The Netherlands, October 2004.
106. S.Pinel, S.Sarkar, R.Bairavasubramanian, J.-H.Lee, M.M.Tentzeris, J.Papapolymerou and J.Laskar, "Highly Integrated LTCC and LCP Millimeter-Wave Functions for 3D-SOP High Data Rate Wireless Systems", Procs. of the 2004 IEEE Asian Pacific Microwave Conference, New Delhi, INDIA, December 2004.
107. N.Bushyager and M.M.Tentzeris, "Subcell Lumped Element Modeling in MRTD with Applications to Metamaterial Characterization", Procs. of the 2004 IEEE Asian Pacific Microwave Conference, New Delhi, INDIA, December 2004.
108. V.Palazzari, S.Pinel, M.M.Tentzeris, L.Roselli, J.Laskar and F.Alimenti, "Design of WLAN Filters in LTCC and LCP System-On-Package Technologies", Procs. of the 2005 IEEE German Microwave Conference, Ulm, GERMANY, April 2005.
109. N.Bushyager and M.M.Tentzeris, "Practical Considerations in the MRTD Modeling of Microwave Structures", Procs. of the 2005 IEEE/ACES Int. Conf. on Wireless Communications and Applied Computational Electromagnetics, pp.281-284, Honolulu, HI, April 2005.
110. K.Kawano, S.Shahrani, T.Mori, M.Kuroda and M.M.Tentzeris, "Dynamic and Electrical Analysis of MEMS Capacitors with Accelerated Motion Effects", Procs. of the 2005 IEEE/ACES Int. Conf. on Wireless Communications and Applied Computational Electromagnetics, pp.759-762, Honolulu, HI, April 2005.

111. D.Staiculescu, N.Bushyager and M.M.Tentzeris, “Microwave/Millimeter-Wave Metamaterial Development Using the Design of Experiments Technique”, Procs. of the 2005 IEEE/ACES Int. Conf. on Wireless Communications and Applied Computational Electromagnetics, pp.417-420, Honolulu, HI, April 2005.
112. J.Laskar, S.Pinel, C.-H.Lee, S.Sarkar, B.Perumana, J.Papapolymerou and M.M.Tentzeris, “Circuit and Module Challenges for 60 GHz Gb/s Radio”, Procs. of the 2005 IEEE/ACES Int. Conf. on Wireless Communications and Applied Computational Electromagnetics, pp.447-450, Honolulu, HI, April 2005.
113. S.K.Kavadias and E.M.Tentzeris, “To Dillhma toy ekpaideyomenou”, [Greek] Invited Paper in the International Conference on New Technologies and Continuous Education 2005 Digest, pp.20-45, Lamia, GREECE, April 2005.
114. J.-H.Lee, S.Sarkar, S.Pinel, J.Papapolymerou, J.Laskar and M.M.Tentzeris, “3D-SOP Millimeter-Wave Functions For High Data Rate Wireless Systems Using LTCC and LCP Technologies”, Procs. of the 2005 IEEE-ECTC Symposium, pp.764-768, Orlando, FL, June 2005.
115. D.Staiculescu, N.Bushyager, L.Martin and M.M.Tentzeris, “Design of Millimeter-Wave Metamaterials Using Deterministic Full-Wave Electromagnetic Simulators and Patch of Ascent Statistical Optimizer”, Procs. of the 2005 IEEE-ECTC Symposium, pp.1565-1568, Orlando, FL, June 2005.
116. S.Basat, K.Lim, I.Kim, J.Laskar, M.M.Tentzeris, Y.Kim, S.Lim and B.Chung, “Design and Development of a Miniaturized Embedded UHF RFID Tag for Automotive Tire Applications”, Procs. of the 2005 IEEE-ECTC Symposium, pp.867-870, Orlando, FL, June 2005.
117. R.J.Pratap, J.H.Lee, S.Pinel, G.S.May, J.Laskar and M.M.Tentzeris, “MillimeterWave RF Front-End Design Using Neuro-Genetic Algorithms”, Procs. of the 2005 IEEE-ECTC Symposium, pp.1802-1806, Orlando, FL, June 2005.
118. W.J.R.Hoefer, P.P.M.So, D.Thompson and M.M.Tentzeris,“Topology and Design of Wideband 3D Metamaterials made of Periodically Loaded Transmission Line Arrays” , Procs. of the 2005 IEEE-IMS Symposium, pp.313-316, Long Beach, CA, June 2005.
119. N.Bushyager and M.M.Tentzeris, “Haar-MRTD Time and Space Adaptive Grid techniques for Practical RF Structures” , Procs. of the 2005 IEEE-IMS Symposium, pp.1123-1126, Long Beach, CA, June 2005.
120. D.Thompson, N.Kingsley, G.Wang, J.Papapolymerou and M.M.Tentzeris, “RF Characteristics of Thin Film Liquid Crystal Polymer (LCP) Packages for RF MEMS and MMIC Integration” , Procs. of the 2005 IEEE-IMS Symposium, pp.857-860, Long Beach, CA, June 2005.
121. B.Pan, Y.Yoon, Y.Z.Zhao, J.Papapolymerou, M.M.Tentzeris and M.Allen, “A Broadband Surface-Micromachined 15-45 GHz Microstrip Coupler” , Procs. of the 2005 IEEE-IMS Symposium, pp.989-992, Long Beach, CA, June 2005.

122. A.Raghavan, E.Gebara, M.M.Tentzeris and J.Laskar, “An Active Interference Canceller for Multistandard Collocated Radio” , Procs. of the 2005 IEEE-IMS Symposium, pp.723-726, Long Beach, CA, June 2005.
123. Y.-K.Yoon, B.Pan, J.Papapolymerou, M.M.Tentzeris and M.G.Allen, “Surface-micromachinedMillimeter-Wave Antennas” , Procs. of the 13th International Conference on Solid-State Sensors, Actuators and Microsystems (Transducers 2005), Vol.2, pp.2986-1989, Hiltonhead, SC, June 2005.
124. R.L.Li, J.Laskar and M.M.Tentzeris, “Circular Loop Antennas Reactively Loaded for a Uniform Traveling-Wave Current Distribution” , Procs. of the 2005 IEEE-APS Symposium, pp.455-458, vol.3B, Washington, DC, July 2005.
125. B.Pan, Y.Yoon, J.Papapolymerou, M.M.Tentzeris and M.G.Allen, “A High Performance Surface-Micromachined Elevated Patch Antenna” , Procs. of the 2005 IEEE-APS Symposium, pp.397-400, vol.1B, Washington, DC, July 2005.
126. I.-K.Kim, S.Pinel, J.Papapolymerou, M.M.Tentzeris, J.Laskar and J.-G.Yook, “Linear Tapered Slot Antennas on LTCC Substrate for Millimeter-Wave Applications” , Procs. of the 2005 IEEE-APS Symposium, pp.483-486, vol.2A, Washington, DC, July 2005.
127. S.Nikolaou, G.E.Ponchak, J.Papapolymerou and M.M.Tentzeris, “Shorted Annular Slot Antenna (ASA) Matched at Three Different Frequencies” , Procs. of the 2005 IEEE-APS Symposium, pp.541-544, vol.1B, Washington, DC, July 2005.
128. S.Nikolaou, G.E.Ponchak, J.Papapolymerou and M.M.Tentzeris, “Double Exponentially Tapered Slot Antenna (DETSA) on Liquid Crystal Polymer (LCP) for UWB Applications” , Student Paper Contest Finalist in the 2005 IEEE-APS Symposium, pp.623-626, vol.2A, Washington, DC, July 2005.
129. G.DeJean and M.M.Tentzeris, “A Printed Microstrip Yagi Antenna Array for Millimeter-Wave Multi-sector Applications” , Procs. of the 2005 IEEE-APS Symposium, pp.529-532, vol.2A, Washington, DC, July 2005.
130. Y.Yoon, B.Pan, J.Papapolymerou, M.M.Tentzeris and M.G.Allen, “A Vertical W-band Surface-Micromachined Yagi-Uda Antenna” , Procs. of the 2005 IEEE-APS Symposium, pp.594-597, vol.3A, Washington, DC, July 2005.
131. K.Yamagata, M.Kuroda andM.M.Tentzeris, “Numerical Modeling of Antennas with Mechanically/MEMS Enabled Moving Parts” , Procs. of the 2005 IEEE-APS Symposium, pp.429-432, vol.2A,Washington, DC, July 2005.
132. R.Bairavasubramanian, D.Thompson, G.DeJean, G.E.Ponchak, M.M.Tentzeris and J.Papapolymerou, “Development of mm-Wave Dual-Frequency Multilayer Antenna Arrays on Liquid Crystal Polymer (LCP) Substrate” , Procs. of the 2005 IEEE-APS Symposium, pp.393-396, vol.1B, Washington, DC, July 2005.
133. G.DeJean, R.L.Li, J.Laskar and M.M.Tentzeris, “Circularly Polarized Loop Antennas with a Parasitic Element for Bandwidth Enhancement” , Student Paper

Contest Finalist in the 2005 IEEE-APS Symposium, pp.401-404, vol.1B, Washington, DC, July 2005.

134. D.C.Thompson, R.L.Li, J.Papapolymerou, J.Laskar and M.M.Tentzeris, "New Short Backfire Antennas for Wireless Applications" , Procs. of the 2005 IEEE-APS Symposium, pp.371-374, vol.2A, Washington, DC, July 2005.

135. L.J.Martin, D.Staiculescu and M.M.Tentzeris, "Design and Optimization of 3D Multilayer Balun Architectures Using the Design of Experiments Technique" , Procs. of the 2005 IEEE-APS Symposium, pp.93-96, vol.1A, Washington, DC, July 2005.

136. S.S.Basat, K.Lim, J.Laskar and M.M.Tentzeris, "Design and Modeling of Embedded 13.56 MHz RFID Antennas" , Procs. of the 2005 IEEE-APS Symposium, pp.64-67, vol.4B, Washington, DC, July 2005.

137. S.Nikolaou, L.Marcaccioli, G.E.Ponchak, J.Papapolymerou and M.M.Tentzeris, "Conformal Double Exponentially Tapered Slot Antennas (DETSA) for UWB Communication Systems' Front Ends", Procs. of the 2005 IEEE-ICU International Conference on Ultrawideband Technologies, Zurich, Switzerland, September 2005.

138. M.M.Tentzeris and S.El-Ghazaly, "Welcome to the CEM-TD Workshop 2005" , Procs. of the 2005 IEEE CEM-TD Workshop, pp.0.4, Atlanta, GA, September 2005.

139. J.H.Lee, N.Bushyager, M.M.Tentzeris, "Comparative Study of DSP Techniques for the Effective Modeling and Design of Highly Complex RF-MEMS Structures" , Procs. of the 2005 IEEE CEM-TD Workshop, pp.88-91, Atlanta, GA, September 2005.

140. M.Kuroda, K.Yamagata and M.M.Tentzeris, "Numerical Technique for the Analysis of Patch Antennas with MEMS-enabled Moving Parts" , Procs. of the 2005 IEEE CEM-TD Workshop, pp.84-87, Atlanta, GA, September 2005.

141. D.Staiculescu, L.Martin and M.M.Tentzeris, "40 GHz Metamaterial Development using Hybrid Electromagnetic/Statistical Tools" , Procs. of the 2005 IEEE CEM-TD Workshop, pp.110-113, Atlanta, GA, September 2005.

142. I.-K.Kim, N.Kingsley, M.Morton, J.Papapolymerou, M.M.Tentzeris and J.-G.Yook, "Fractal-Shape 40 GHz Microstrip Bandpass Filter on High-Resistivity Si for Suppression of the 2nd Harmonic" , Procs. of the 2005 European Microwave Symposium, Vol.2, pp.825-828, Paris, FRANCE, October 2005.

143. L.Marcacciolli, C.Lugo, M.M.Tentzeris, J.Papapolymerou and R.Sorrentino, "A Novel Reconfigurable Coupler for Intelligent SOP RF Front-Ends" , Procs. of the 2005 European Microwave Symposium, Vol.1, pp., Paris, FRANCE, October 2005.

144. B.Pan, Y.Yoon, J.Papapolymerou, M.M.Tentzeris andM.G.Allen, "Design and Fabrication of Substrate-Independent Integrated Antennas Utilizing Surface

Micromachining Technology" , Procs. of the 2005 Asian-Pacific Microwave Conference, Vol.2, pp., Shuzhou, CHINA, December 2005.

145. J.-H.Lee, N.Kidera, S.Pinel, J.Papapolymerou, J.Laskar and M.M.Tentzeris, "A Highly Integrated 3D Millimeter-Wave Filter Using LTCC System-on-Package (SOP) Technology for V-Band WLAN Gigabit Wireless Systems" , Procs. of the 2005 Asian-Pacific Microwave Conference, Vol.1, pp., Shuzhou, CHINA, December 2005.
146. S.Nikolaou, G.E.Ponchak, J.Papapolymerou and M.M.Tentzeris, "Design and Development of an Annular Slot Antenna (ASA) with a Reconfigurable Radiation Pattern" , Procs. of the 2005 Asian-Pacific Microwave Conference, Vol.5, pp., Shuzhou, CHINA, December 2005.
147. J.Laskar, A.Raghavan, C.-H.Lee, E.Gebara, M.M.Tentzeris and T.Stelliga, "An Active Integrated Circuit Wireless Interference Cancellation Solution" , Procs. of the 2006 IEEE Radio and Wireless Symposium, pp.559-562, San Diego, CA, January 2006.
148. G.E.Ponchak and M.M.Tentzeris, "Multiple Modes on Embedded Inverted Microstrip Lines" , Procs. of the 2006 IEEE SiRF Conference, pp., San Diego, CA, January 2006.
149. R.L.Li, J.Laskar and M.M.Tentzeris, "A Quasi-Planar Miniaturized Broadband Antenna" , Procs. of the 2006 IEEE Int. Workshop on Antenna Technology, Small Antennas and Novel Metamaterials, pp.120-123, Urbana-Champaign, IL, March 2006.
150. S.Basat, M.M.Tentzeris and J.Laskar, "Miniaturized Embedded UHF RFID Tags for Automotive Applications" , Procs. of the 2006 IEEE Int. Workshop on Antenna Technology, Small Antennas and Novel Metamaterials, pp.160-123, Urbana-Champaign, IL, March 2006.
151. S.Horst, S.Bhattacharya, S.Johnston, M.M.Tentzeris and J.Papapolymerou, "Modeling and Characterization of Thin Film Broadband Resistors on LCP for RF Applications", Procs. of the 2006 IEEE-ECTC Symposium, pp.1751-1755, San Diego, CA, June 2006.
152. B.Pan, G.DeJean, J.Papapolymerou, M.M.Tentzeris, Y.Yoon, M.G.Allen, "High-Performance System-on-Package Integrated Yagi-Uda Antennas for W-band Applications and mm-Wave Ultra-Wideband Data Links", Procs. of the 2006 IEEE-ECTC Symposium, pp.1712-1717, San Diego, CA, June 2006.
153. S.Basat, S.Bhattacharya, A.Rida, S.Johnston, L.Yang, M.M.Tentzeris and J.Laskar, "Fabrication and Assembly of a Novel High-Efficiency UHF RFID Tag on Flexible LCP Substrate", Procs. of the 2006 IEEE-ECTC Symposium, pp.1352-1355, San Diego, CA, June 2006.
154. J.-H.Lee, N.Kidera, S.Pinel, J.Laskar and M.M.Tentzeris, "V-band Integrated Filter and Antenna for LTCC Front-End Modules" , Procs. of the 2006 IEEE MTT-

S International Microwave Symposium Digest, pp.978-981, San Francisco, CA, June 2006.

155. D.Staiculescu, C.You, L.Martin, W.Hwang and M.M.Tentzeris, "Hybrid Electrical/Mechanical Optimization Technique Using Time-Domain Modeling, Finite Element Method and Statistical Tools for Composite Smart Structures" , Procs. of the 2006 IEEE MTT-S International Microwave Symposium Digest, pp.288-291, San Francisco, CA, June 2006.
156. D.E.Anagnostou, J.Papapolymerou, C.G.Christodoulou and M.M.Tentzeris, "A Small Planar Log-Periodic Koch-Dipole Antenna (LPKDA)" , Procs. of the 2006 IEEE-APS Symposium, pp.3685-3688, Albuquerque, NM, July 2006.
157. D.Staiculescu, L.Martin and M.M.Tentzeris, "Multilayer Embedded Metamaterial Optimization for 3D Integrated Module Applications" , Procs. of the 2006 IEEE-APS Symposium, pp.4137-4140, Albuquerque, NM, July 2006.
158. G.R.DeJean, T.T.Thai and M.M.Tentzeris, "Design of Microstrip bi-Yagi and Microstrip quad-Yagi Antenna Arrays for WLAN and Millimeter-Wave Applications" , Procs. of the 2006 IEEE-APS Symposium, pp.989-992, Albuquerque, NM, July 2006.
159. C.You, D.Staiculescu, L.Martin, W.Hwang and M.M.Tentzeris, "Efficient Co-Design of Composite Smart Structures (antennas and mechanical structures) Using a Novel Hybrid Optimization Technique" , Procs. of the 2006 IEEE-APS Symposium, pp.569-572, Albuquerque, NM, July 2006.
160. B.Pan, R.L.Li, J.Papapolymerou, J.Laskar and M.M.Tentzeris, "Low-Profile Broadband and Dual-Frequency Two-Strip Planar Monopole Antennas" , Procs. of the 2006 IEEE-APS Symposium, pp.2665-2668, Albuquerque, NM, July 2006.
161. B.Pan, R.L.Li, J.Papapolymerou, J.Laskar and M.M.Tentzeris, "A Cavity-Backed Broadband Circularly Polarized Slot/Strip Loop Antenna with a Simple Feeding Structure" , Procs. of the 2006 IEEE-APS Symposium, pp.2595-2598, Albuquerque, NM, July 2006.
162. B.Kim, S.Nikolaou, G.E.Ponchak, Y.-S.Kim, J.Papapolymerou and M.M.Tentzeris, "A Curvature CPW-fed Ultra-wideband Monopole Antenna on Liquid Crystal Polymer Substrate Using Flexible Characteristics" , Procs. of the 2006 IEEE-APS Symposium, pp.1667-1670, Albuquerque, NM, July 2006.
163. J.-H.Lee, N.Kidera, S.Pinel, J.Laskar and M.M.Tentzeris, "60 GHz High-gain Aperture-coupled Microstrip Antennas Using Soft-surface and Stacked Cavity on LTCC Multilayer Technology", Procs. of the 2006 IEEE-APS Symposium, pp.1621-1624, Albuquerque, NM, July 2006.
164. I.-K.Kim, J.-I.Kim, S.Pinel, J.Laskar, M.M.Tentzeris and J.-G.Yook, "Novel Feeding Topologies for 2nd Harmonic Suppression in Broadband Microstrip Patch Antennas" , Procs. of the 2006 IEEE-APS Symposium, pp.1483-1486, Albuquerque, NM, July 2006.

165. S.Nikolaou, D.E.Anagnostou, G.E.Ponchak, M.M.Tentzeris and J.Papapolymerou, "Compact Ultra Wide-Band (UWB) CPW-fed Elliptical Monopole on Liquid Crystal Polymer (LCP)" , Procs. of the 2006 IEEE-APS Symposium, pp.4657-4660, Albuquerque, NM, July 2006.
166. S.Basat, S.Bhattacharya, L.Yang, A.Rida, M.M.Tentzeris and J.Laskar, "Design of Novel High-Efficiency UHF RFID Antenna on Flexible LCP Substrate with High Read-range Capability" , Procs. of the 2006 IEEE-APS Symposium, pp.1031-1034, Albuquerque, NM, July 2006.
167. L.Yang, S.Basat and M.M.Tentzeris, "Design and Development of Novel Inductively Coupled RFID Antennas" , Procs. of the 2006 IEEE-APS Symposium, pp.1035-1038, Albuquerque, NM, July 2006.
168. A.Ferrer-Vidal, A.Rida, S.Basat, L.Yang and M.M.Tentzeris, "Integration of Sensors and RFID's on Ultra-low-cost Paper-based Substrates for Wireless Sensor Networks" , Procs. of the 2006 2nd Workshop on Wireless Mesh Networks (WiMesh 2006), pp.126-128, Washington, DC, September 2006.
169. D.Staiculescu, L.Martin and M.M.Tentzeris, "Performance capability modeling and Optimization of RF/Millimeter Wave Integrated Functions and Modules Using a Hybrid Statistical/EM Technique that Includes Process Variations", Procs. of the 2006 IEEE-EuMC Symposium, pp.474-477, Manchester, UK, September 2006.
170. J.-H.Lee, N.Kidera, S.Pinel, J.Laskar and M.M.Tentzeris, "A Compact Quasi-Elliptic Dual-Mode Cavity Filter Using LTCC Technology for V-band WLAN Gigabit Wireless Systems", Procs. of the 2006 IEEE-EuMC Symposium, pp.1377-1379, Manchester, UK, September 2006.
171. J.-H.Lee, K.Nobutaka, A.Traille, S.Pinel, J.Laskar and M.M.Tentzeris, "Advanced 3D LTCC Passive Components Using Cavity Structures for 60 GHz Gigabit Wireless Systems", Procs. of the 2006 IEEE-APMC Symposium, pp.356-359, Yokohama, JAPAN, December 2006.
172. S.Nikolaou, B.Kim, Y.-S.Kim, J.Papapolymerou and M.M.Tentzeris, "CPW-fed Ultra Wideband (UWB) Monopoles with Band Rejection Characteristic on Ultra Thin Organic Substrate", Procs. of the 2006 IEEE-APMC Symposium, pp.2010-2013, Yokohama, JAPAN, December 2006.
173. L.Yang, S.Basat, A.Rida and M.M.Tentzeris, "Design and Development of Novel Miniaturized UHF RFID tags on Ultra-low-cost Paper-based Substrates", Procs. of the 2006 IEEE-APMC Symposium, pp.1493-1496, Yokohama, JAPAN, December 2006. ***2006 IEEE-APMC Award***
174. M.M.Tentzeris, "Multilayer (3D)Wireless, RF andMillimeter-Wave Passives andModules Using SOP Technology", Procs. of the 2007 Topical Meeting on SiRF, pp.181-182, Long Beach, CA, January 2007.
175. S.Bhattacharya, M.M.Tentzeris, L.Yang, S.Basat and A.Rida, "Flexible LCP and Paper-based Substrates with Embedded Actives, Passives, and RFIDs", Procs.

of the 2007 6th International Conference on Polymers and Adhesives in Microelectronics and Photonics (Polytronic 2007), pp.159-166, Tokyo, JAPAN, January 2007.

176. A.Rida, R.Vyas, T.Wu, R.L.Li and M.M.Tentzeris, ”Development and Implementation of Novel UHF Paper-Based RFID Designs for Anti-counterfeiting and Security Applications”, Procs. of the 2007 IEEE International Workshop on Anti-counterfeiting, Security and Identification, pp.52-56, Xiamen, CHINA, April 2007.
177. A.Rida, R.Vyas, S.Basat, A.Ferrer-Vidal, L.Yang, S.Bhattacharya and M.Tentzeris, “Paper-Based Ultra Low-Cost Integrated RFID Tags for Sensing and Tracking Applications”, Procs. of the 2007 IEEE-ECTC Symposium, pp.1977-1980, San Diego, CA, May 2007.
178. S.Horst, D.E.Anagnostou, G.E.Ponchak, M.M.Tentzeris and J.Papapolymerou, “Beam-Shaping of Planar Array Antennas Using Integrated Attenuators”, Procs. of the 2007 IEEE-ECTC Symposium, pp.165-168, San Diego, CA, May 2007.
179. A.Rida, L.Yang, R.Vyas, S.Basat, S.Bhattacharya and M.M.Tentzeris, “Novel Manufacturing Processes for Ultra Low-Cost Paper-Based RFID Tags with Enhanced ”Wireless Intelligence” ”, Procs. of the 2007 IEEE-ECTC Symposium, pp.773-776, San Diego, CA, May 2007.
180. S.Horst, S.Bhattacharya, M.M.Tentzeris and J.Papapolymerou, “Monolithic Low-Cost Ka-Band Wilkinson Power Dividers on Flexible Organic Substrates”, Procs. of the 2007 IEEE-ECTC Symposium, pp.1851-1854, San Diego, CA, May 2007.
181. L.Yang andM.M.Tentzeris, “Design and Characterization of Novel Paper-based Inkjet-Printed RFID and Microwave Structures for Telecommunication and Sensing Applications”, Procs. of the 2007 IEEE-IMS Symposium, pp.1633-1636, Honolulu, HI, June 2007. ***Third IMS 2007 Best Student Paper Award***
182. F.Placentino, D.Staiculescu, S.Nikolaou, L.Martin, A.Scarponi, F.Alimenti, L.Roselli and M.M.Tentzeris, “Concurrent Circuit-Level/System-Level Optimization of a 24GHz Mixer for Automotive Applications Using a Hybrid Electromagnetic/Statistical Technique”, Procs. of the 2007 IEEE-IMS Symposium, pp.1217-1220, Honolulu, HI, June 2007.
183. Y.Li, B.Pan, M.M.Tentzeris and J.Papapolymerou, “A Fully Micromachined W-Band Coplanar Waveguide to Rectangular Waveguide Transition”, Procs. of the 2007 IEEE-IMS Symposium, pp.1031-1034, Honolulu, HI, June 2007.
184. A.Rida, L.Yang and M.M.Tentzeris, “Design and Characterization of Novel Paper-based Inkjet-Printed UHF Antennas for RFID and Sensing Applications”, Procs. of the 2007 IEEE-APS Symposium, pp.2749-2752, Honolulu, HI, June 2007. ***Best APS 2007 Student Paper Award***
185. D.J.Chung, D.E.Anagnostou, G.Ponchak, M.M.Tentzeris and J.Papapolymerou, “Integration of a 4x8 Antenna Array with a Reconfigurable 2-bit Phase Shifter Using RFMEMS Switches on Multilayer Organic Substrates”, Procs. of the 2007 IEEE-APS Symposium, pp.93-96, Honolulu, HI, June 2007.

186. L.Yang, A.Rida, T.Wu, S.Basat and M.M.Tentzeris, “Integration of Sensors and Inkjet-Printed RFID Tags on Paper-Based Substrates for UHF Cognitive Intelligence Applications”, Procs. of the 2007 IEEE-APS Symposium, pp.1193-1196, Honolulu, HI, June 2007.
187. R.Vyas, A.Rida, S.Bhattacharya and M.M.Tentzeris, “Liquid Crystal Polymer (LCP): The Ultimate Solution for Low-Cost RF Flexible Electronics and Antennas”, Procs. of the 2007 IEEE-APS Symposium, pp.1729-1732, Honolulu, HI, June 2007.
188. T.T.Thai, G.R.DeJean and M.M.Tentzeris, “Design and Development of a Novel Compact Soft-Surface Structure for the Front-to-Back Ratio Improvement and Size Reduction of Microstrip Yagi Antenna Arrays”, Procs. of the 2007 IEEE-APS Symposium, pp.1381-1384, Honolulu, HI, June 2007.
189. S.Nikolaou, G.E.Ponchak, M.M.Tentzeris and J.Papapolymerou, “Compact Cactus-Shaped Ultra-Wideband (UWB) Monopole on Organic Substrate”, Procs. of the 2007 IEEE-APS Symposium, pp.4637-4640, Honolulu, HI, June 2007.
190. R.L.Li, B.Pan, J.Papapolymerou, J.Laskar and M.M.Tentzeris, “Low-Profile Broadband Planar Antennas for DVB-H, DCS-1800 and IMT-2000 Applications”, Procs. of the 2007 IEEE-APS Symposium, pp.4729-4732, Honolulu, HI, June 2007.
191. D.E.Anagnostou, S.Nikolaou, H.Kim, B.Kim, M.M.Tentzeris and J.Papapolymerou, “Dual Band-Notched UWB Antenna for 802.11a WLAN Environments”, Procs. of the 2007 IEEE-APS Symposium, pp.4621-4624, Honolulu, HI, June 2007.
192. T.Wu, A.Traille, L.Yang, B.Pan, J.Papapolymerou and M.M.Tentzeris, “Novel Substrate-Independent Broadband Micromachined Antennas for mm-wave Cognitive Radio Applications”, Procs. of the 2007 IEEE-APS Symposium, pp.5833-5836, Honolulu, HI, June 2007.
193. G.DeJean, D.Staiculescu, L.Martin, U.Onyewuchi, R.L.Li and M.M.Tentzeris, “Hybrid Statistical/Electromagnetic Optimization and Performance Capability Modeling of an LTCC Compact Soft/Hard Surface Structure”, Procs. of the 2007 IEEE-APS Symposium, pp.5749-5752, Honolulu, HI, June 2007.
194. N.Tavassolian, S.Nikolaou and M.M.Tentzeris, “Microwave Tumor Detection Using a Flexible UWB Elliptical Slot Antenna with a Tuning Uneven U-shape Stub on LCP”, Procs. of the 2007 IEEE-APS Symposium, pp.257-260, Honolulu, HI, June 2007.
195. J.L.Jordan, G.E.Ponchak, N.Tavassolian andM.M.Tentzeris, “Characteristics of a Linearly Tapered Slot Antenna (LTSA) Conformed Longitudinally Around a Cylinder ”, Procs. of the 2007 IEEE-APS Symposium, pp.3848-3851, Honolulu, HI, June 2007.
196. C.You, W.Hwang and M.M.Tentzeris, “Impact Behavior and Radiation Performance of a Structurally Integrated Antenna Array Conformed Around

Cylindrical Bodies", Procs. of the 2007 IEEE-APS Symposium, pp.3844-3847, Honolulu, HI, June 2007.

197. L.Yang and M.M.Tentzeris, "3D Multilayer Integration and Packaging on Organic/Paper Low-cost Substrates for RF and Wireless Applications", Procs. of the 2007 IEEE International Symposium on Signals, Systems and Electronics (ISSSE 2007) Digest, pp.267-270, Ottawa, CANADA, July-August 2007.

198. M.Tentzeris, L.Yang, A.Rida, A.Traille, R.Vyas and T.Wu, "Inkjet-Printed Antennas on Paper: Are they the Ultimate Solution for UHF Ubiquitous Cognitive-Intelligence RFID-enabled Applications?", Procs. 2007 International Symposium on Antennas and Propagation (ISAP 2007), pp.1011-1014, Niigata, JAPAN, August 2007. ***ISAP 2007 Poster Award***

199. A.Traille and M.M.Tentzeris, "Design and Modeling of a Novel Dual-Band Circular-Polarization Antenna for Multi-Standard/Multi-Band "Universal" RFID Readers", Procs. 2007 International Symposium on Antennas and Propagation (ISAP 2007), pp.1142-1145, Niigata, JAPAN, August 2007.

200. L.Yang, A.Rida, J.Li and M.M.Tentzeris, "Antenna Advancement Techniques and Integration of RFID Electronics on Organic Substrates for UHF RFID Applications in Automotive Sensing and Vehicle Security", Digest of the 2007 66th IEEE Vehicular Technology Conference (VTC-2007), pp.2040-2041, Baltimore, MD, September-October 2007.

201. A.Rida, L.Yang, R.Vyas, S.Bhattacharya and M.M.Tentzeris, "Integration of Sensors and Inkjet-Printed RFID Tags on Paper-Based Substrates for UHF Cognitive Intelligence Applications", Procs. of the 2007 European Microwave Conference, pp.724-727, Munich, GERMANY, October 2007.

202. A.Traille, L.Yang, A.Rida, T.Wu and M.M.Tentzeris, "Design and Modeling of Novel Multiband/Wideband Antennas for RFID Tags and Readers Using Time-/Frequency-Domain Simulators", Proc. of the 2007 IEEE CEM-TD Symposium, pp.1-3, Perugia, ITALY, October 2007.

203. L.Martin, D.Staiculescu, H.Li, S.L.Ooi, C.P.Wong and M.M.Tentzeris, "Investigation of the Impact of Magnetic Permeability and Loss of Magnetic Composite Materials on RFID and RF Passives Miniaturization", Proc. of the 2007 IEEE CEM-TD Symposium, pp.1-4, Perugia, ITALY, October 2007.

204. R.Vyas, A.Rida, L.Yang and M.M.Tentzeris, "Design and Development of a Novel Paper-Based Inkjet-Printed FID-Enabled UHF (433.9 MHz) Sensor Node", Proc. of the 2007 IEEE APMC Symposium, Vol.II, pp.1037-1040, Bangkok, THAILAND, December 2007.

205. N.Tavassolian, S.Nikolaou and M.M.Tentzeris, "A Flexible UWB Elliptical Slot Antenna with a Tuning Uneven U-shape Stub on LCP for Microwave Tumor Detection", Proc. of the 2007 IEEE APMC Symposium, Vol.III, pp.1577-1580, Bangkok, THAILAND, December 2007.

206. S. Nikolaou, A. Amadjikpe, J. Papapolymerou and M.M.Tentzeris, "Compact Ultra Wideband (UWB) Elliptical Monopole with Potentially Reconfigurable Band

Rejection Characteristic", Proc. of the 2007 IEEE APMC Symposium, Vol.III, pp.1875-1878, Bangkok, THAILAND, December 2007.

207. M.M.Tentzeris, "Novel Paper-based Inkjet-Printed Antennas and Wireless Sensor Modules", Procs. of the 2008 COMCAS International Conference, Invited Paper, Tel Aviv, ISRAEL, May 2008.

208. A.Rida, L.Yang, N.Chaisilwattana, S.Travis, S.Bhattacharya and M.Tentzeris, "3D Packaging Architecture Using Paper as a Dielectric Medium", Procs. of the 2008 IEEE-ECTC Symposium, pp.371-373, Orlando, FL, May 2008.

209. T.Thai, A.Haque, J.Ratner, M.M.Tentzeris and G.DeJean, "Development of a Fully-Integrated Ultrasensitive Wireless Sensor Utilizing Carbon Nanotubes and Surface Plasmon Theory", Procs. of the 2008 IEEE-ECTC Symposium, pp.436-439, Orlando, FL, May 2008. ***Motorola Award Finalist***

210. L.Yang, R.Vyas, A.Rida, J.Pan and M.Tentzeris, "Wearable RFID-Enabled Sensor Nodes for Biomedical Applications", Procs. of the 2008 IEEE-ECTC Symposium, pp.2156-2159, Orlando, FL, May 2008.

211. A.Traille, L.Yang, A.Rida and M.M.Tentzeris, "A Novel Liquid Antenna for Wearable Biomonitoring", Procs. of the 2008 IEEE IMS Symposium, pp.923-926, Atlanta, GA, June 2008.

212. B.Pan, Y.Li, M.M.Tentzeris and J.Papapolymerou, "A Novel Low-loss Integrated 60 GHz Cavity Filter with Source-load Coupling using Surface Micromachining Technology', Procs. of the 2008 IEEE IMS Symposium, pp.639-642, Atlanta, GA, June 2008.

213. B.McGarvey and M.M.Tentzeris, "An Efficient Method for the Coupling of a Fully-Explicit Time-Domain Solid-State Hydrodynamic simulator with FDTD EM Solvers", Procs. of the 2008 IEEE IMS Symposium, pp.49-52, Atlanta, GA, June 2008.

214. R. Vyas, A. Rida, L. Yang and M.M.Tentzeris, "Design, Integration and Characterization of a Novel Paper-based Wireless Sensor Module", Procs. of the the 2008 IEEE IMS Symposium, pp.1305-1308, Atlanta, GA, June 2008. ***Student Paper Competition Finalist***

215. L.Yang, L.Martin, D.Staiculescu, C.P.Wong and M.M.Tentzeris, "A Novel Flexible Magnetic Composite Material for RFID, Wearable RF and Bio-monitoring Applications", Procs. of the 2008 IEEE IMS Symposium, pp.963-966, Atlanta, GA, June 2008. ***Student Paper Competition Honorable Mention***

216. Y.Zhao, S.Kim, Y.Li, B.Pan, X.Wu, M.M.Tentzeris, J.Papapolymerou and M.G.Allen, "A Micromachined Airflow Sensor Based on RF Evanescent-mode Cavity Resonator", Procs. of the 2008 IEEE IMS Symposium, pp.1199-1202, Atlanta, GA, June 2008.

217. Y.Li, H.Doo, B.Pan, M.M.Tentzeris, Z.L.Zhang and J.Papapolymerou, "Novel Enhanced-Thickness Magnetic Nanoparticle Thin-Films for System-On-Chip

(SOC) Wireless Applications", Procs. of the 2008 IEEE IMS Symposium, pp.97-100, Atlanta, GA, June 2008.

218. R.L.Li, B.Pan, T.Wu, J.Laskar and M.M.Tentzeris, "A Triple-band Low-Profile Planar Antenna for Wireless Applications", Procs. of the 2008 IEEE APS Symposium, San Diego, CA, July 2008.

219. T.Wu, R.L.Li, S.Y.Eom, K.Lim, S.I.Leon, J.Laskar and M.M.Tentzeris, "A Multiband/Scalable Reconfigurable Antenna for Cognitive Radio Base Stations", Procs. of the 2008 IEEE APS Symposium, San Diego, CA, July 2008.

220. L.Yang, L.Martin, D.Staiculescu, C.P.Wong and M.M.Tentzeris, "Design and Development of Compact Conformal RFID Antennas Utilizing Novel Flexible Magnetic Composite Materials for Wearable RF and Biomedical Applications', Procs. of the 2008 IEEE APS Symposium, San Diego, CA, July 2008.

221. T.T.Thai, A.Haque, G.R.DeJean and M.M.Tentzeris, "A Novel Ultrasensitive Gas Detector System Based on Carbon Nanotube Mixtures and Antenna Radiation Variation", Procs. of the 2008 IEEE APS Symposium, San Diego, CA, July 2008.

222. R.L.Li, B.Pan, T.Wu, K.Lim, J.Laskar and M.M.Tentzeris, "A Broadband printed Dipole and a Printed Array for Base Station Applications", Procs. of the 2008 IEEE APS Symposium, San Diego, CA, July 2008.

223. C.Kruesi and M.M.Tentzeris, " "Magic-Cube" Antenna Configurations for Ultra Compact RFID and Wireless Sensor Nodes", procs. of the 2008 IEEE APS Symposium, San Diego, CA, July 2008.

224. S.Hong, H.Chunyu, K.Liu and M.M.Tentzeris, "Combination of Adaptive Modulation and Power Management for the Performance Enhancement of MIMO-OFDM Systems", Procs. of the 2008 IEEE APS Symposium, San Diego, CA, July 2008.

225. A.Traille, L.Yang and M.M.Tentzeris, "A Novel Liquid Ionic Antenna for Bio-Signal Monitoring Applications", Procs. of the 2008 IEEE APS Symposium, San Diego, CA, July 2008. ***Student Paper Competition Finalist***.

226. R.J.Vyas, A.Rida, L.Yang and M.M.Tentzeris, "Design and Development of the First Entirely paper-Based Wireless Temperature-Sensor Module", Procs. of the 2008 IEEE APS Symposium, San Diego, CA, July 2008. ***Student Paper Competition Honorable Mention.***

227. L.Yang, L.Martin, D.Staiculescu, C.P.Wong and M.M.Tentzeris, "Design and Development of Compact Conformal RFID Antennas Utilizing Flexible Magnetic Composite Materials for Wearable and Biomedical Applications", Procs. of the 2008 IEEE APS Symposium, San Diego, CA, July 2008. ***Student Paper Competition Honorable Mention.***

228. M.M.Tentzeris and Y.Kawahara, "Novel Energy Harvesting Technologies for ICT Applications", Procs. of the 2008 SAINT Symposium, pp.373-376, Helsinki, FINLAND, August 2008.

229. L.Marcaccioli, P.Farinelli, M.M.Tentzeris, J.Papapolymerou and R.Sorrentino, "Design of a Broadband MEMS-based Reconfigurable Coupler in Ku-Band", Procs. of the 2008 European Microwave Conference (EuMW 08), Amsterdam, NETHERLANDS, September 2008.
230. A.Rida, R.Vyas, L.Yang, C.Kruesi and M.M.Tentzeris, "Low Cost Inkjet-Printing Paper-based Modules for RFID Sensing and Wireless Applications", Procs. of the 2008 European Microwave Conference (EuMW 08), Amsterdam, NETHERLANDS, September 2008.
231. L.Yang, L.Martin, D.Staiculescu, C.P.Wong and M.M.Tentzeris, "Comprehensive Study on the Impact of Dielectric and Magnetic Loss on Performance of a Novel Flexible Magnetic Composite Material", Procs. of the 2008 European Microwave Conference (EuMW 08), Amsterdam, NETHERLANDS, September 2008.
232. R.L.Li, T.Wu and M.M.Tentzeris, "A Dual-Band Unidirectional Coplanar Antenna for 2.4-5 GHz Wireless Applications', Procs. of the 2008 Asia-Pacific Microwave Conference (APMC 2008), Hong Kong, CHINA, December 2008.
233. M.M.Tentzeris, A.Traille, L.Yang, V.Lakafossis, R.Vyas, A.Rida, A.Haque and D.Staiculescu, "RFID-Enabled Biosensing Wireless Modules", Procs. of the 2009 IEEE Radio and Wireless Symposium (RWS09), pp.131-134, San Diego, CA, January 2009.
234. A.Rida, S.Nikolaou and M.M.Tentzeris, "Broadband UHF RFID/Sensor Modules for Pervasive Cognition Applications", Procs. of the 2009 European Conference on Antennas and Propagation (EuCAP 2009), pp.2344-2347, Berlin, GERMANY, April 2009.
235. Z.Konstas, A.Rida, R.Vyas, K.Katsibas, N.Uzunoglu and M.M.Tentzeris, "A Novel "Green" Inkjet-Printed Z-Shaped Monopole Antenna for RFID Applications", Procs. of the 2009 European Conference on Antennas and Propagation (EuCAP 2009), pp.2340-2343, Berlin, GERMANY, April 2009.
236. S.Hong, H.Xiong, K.Liu, Q.Chang, Q.Zhang, Y.Liu, X.He and M.M.Tentzeris, "Application of Bridge Function Sequences in Passive Beamformer", Procs.of the 2009 International Conference on Networks Security, Wireless Communications and Trusted Computing (NSWCTC 2009), Vol.1, pp.637-640, Wuhan, CHINA, April 2009.
237. T.Thai, J.Ratner, W.Chen, G.DeJean and M.M.Tentzeris, "Characterization and Testing of Novel Polarized Nanomaterial Textiles for Ultrasensitive Wireless Gas Sensors", Procs. of the 2009 IEEE ECTC Conference, pp.1049-1052, San Diego, CA, May 2009.
238. A.Rida, A.Margomenos and M.M.Tentzeris, "Wideband mmW Compensated 90deg Bends for Grounded Coplanar Waveguide and Microstrip Transmission Lines on Flexible LCP Substrates", Procs. of the 2009 IEEE ECTC Conference, pp.2000-2003, San Diego, CA, May 2009.

239. V.Lakafosis and M.M.Tentzeris, "Implementation of Multi-hop Routing Protocols for the Dramatic Range Enhancement of Wireless Sensor Networks", Procs. of the 2009 IEEE APS Symposium, Charleston, SC, May 2009.
240. A.Rida, L.Yang, T.Reynolds, E.Tan, S.Nikolaou and M.M.Tentzeris, "Inkjet-Printing UHF Antenna for RFID and Sensing Applications on Liquid Crystal Polymer", Procs. of the 2009 IEEE APS Symposium, Charleston, SC, May 2009.
241. V.Lakafosis, N.Chaisilwattana, C.Kruesi, L.Yang, D.Staiculescu and M.M.Tentzeris, "Low-Cost Low-Power Small-Form-Factor Node for Health Monitoring Wireless Multi-Hop Personal Area Networks with Drastically Increased Range', Procs. of the 2009 IEEE APS Symposium, Charleston, SC, May 2009.
242. R.L.Li, T.Wu and M.M.Tentzeris, "A Triple-Band Unidirectional Coplanar Antenna for 2.4/3.5/5-GHz WLAN/WiMax Applications", Procs. of the 2009 IEEE APS Symposium, Charleston, SC, May 2009.
243. T.T.Thai, G.R.DeJean and M.M.Tentzeris, "Novel Ultrasensitive Millimeter-Wave Pressure Transducer Utilizing a Si Membrane and a stacked-patch Configuration", Procs. of the 2009 IEEE APS Symposium, Charleston, SC, May 2009. ***Second Best Student Paper Award APS 2009***
244. R.J.Vyas, V.Lakafosis, Z.Konstas and M.M.Tentzeris, "Design of a Novel, Battery-less, Solar Powered Wireless Tag for Enhanced Range Remote Tracking Applications", Procs. of the 2009 IEEE APS Symposium, Charleston, SC, May 2009. ***Student Paper Competition Finalist APS 2009***
245. T.Thai, J.Ratner, W.Chen, T.Thivikraman, G.DeJean and M.M.Tentzeris, "First Generation of Ultrathin Polarized Nanomaterials for Millimeter-Wave (26-40 GHz) Textile Antenna Applications", Procs. of the 2009 IEEE APS Symposium, Charleston, SC, May 2009.
246. Z.Konstas, K.Katsibas and M.M.Tentzeris, "A Novel "Green" Inkjet-Printed Monopole Antenna Topology for Concurrent RFID and Cellular Communications", Procs. of the 2009 IEEE APS Symposium, Charleston, SC, May 2009.
247. L.Yang, D.Staiculescu, R.Zhang, C.P.Wong and M.M.Tentzeris, "A Novel "Green" Fully Integrated Ultrasensitive RFID-Enabled Gas Sensor Utilizing Inkjet-printed Antennas and Carbon Nanotubes", Procs. of the 2009 IEEE APS Symposium, Charleston, SC, May 2009.
248. T.Wu, R.L.Li and M.M.Tentzeris, "A Mechanically Stable, Low Profile, Omni-Directional Solar-Cell Integrated Antenna for Outdoor Wireless Sensor Nodes", procs. of the 2009 IEEE APS Symposium, Charleston, SC, May 2009.
249. A.Rida, A.Margomenos, T.Wu and M.M.Tentzeris, "Novel wideband 3D Transitions on Liquid Crystal Polymer for Millimeter-wave Applications up to 100 GHz", Procs. of the 2009 IEEE IMS Symposium, pp.953-956, Boston, MA, June 2009.

250. T.T.Thai, G.R.DeJean and M.M.Tentzeris, “A Novel Front-End Radio Frequency Pressure Transducer based on a Dual-Band Resonator for Wireless Sensing”, procs. of the 2009 IEEE IMS Symposium, pp.1701-1704, Boston, MA, June 2009.
251. R.Vyas, V.Lakafosis, T.Wu, Y.Kawahara and M.M.Tentzeris, “Near-Perpetual Operated Solar and RF Powered Autonomous Sensing Systems”, Procs. of the 2009 IEEE IMS Symposium, pp.2240-2243, Boston, MA, June 2009.
252. J.Dowling, M.M.Tentzeris and N.Beckett, “RFID-Enabled Temperature Sensing Devices: a Major Step Forward for Energy Efficiency in Home and Industrial Applications?”, Procs. of the 2009 IEEE MTT-S International workshop on Wireless Sensing, Local Positioning and RFID (IMWS 2009), pp.1-4, Croatia, September 2009.
253. R.Vyas, V.Lakafosis, Z.Konstas and M.M.Tentzeris, “Design and Characterization of a Novel Battery-less, Solar Powered Wireless Tag for Enhanced-Range Remote Tracking Applications”, Procs. of the 2009 European Microwave Conference (EuMC 2009), pp.169-172, Rome, ITALY, September 2009.
254. J.Choo, J.Ryoo, J.Hong, H.Jeon, C.Choi and M.M.Tentzeris, “T-Maching Networks for the Efficient Matching of Practical RFID Tags”, Procs. of the 2009 European Microwave Conference (EuMC 2009), pp.5-8, Rome, ITALY, September 2009.
255. A.Rida, F.Nasri, A.Margomenos and M.M.Tentzeris, “Integration of Novel mm-Wave Components on Flexible Organic Substrates for Automotive Radar Applications”, Procs. of the 2009 European Microwave Conference (EuMC 2009), pp.1327-1330, Rome, ITALY, September 2009. **Best Student Paper Finalist**
256. A.Traille, L.Yang, A.Rida, V.Lakafosis and M.M.Tentzeris, “Novel Miniaturized Antennas for RFID-enabled Sensors”, Procs. of IEEE Sensors 2009, Christchurch, NEW ZEALAND, October 2009.
257. M.M.Tentzeris, “Organic and Ceramic SoP Solutions and Modules for mmW Applications”, Procs. of the 2009 IEEE International Symposium on Radio-Frequency Integration Technology (RFIT 2009), pp.166-169, Invited Presentation, Singapore, SINGAPORE, December 2009.
258. J.Dowling and M.M.Tentzeris, “ “Smart House” and “Smart Energy” Applications of Low-Power RFID-based Wireless Sensors”, Procs. of the 2009 APMC Conference, pp.2412-2415, Singapore, SINGAPORE, December 2009.
259. M.M.Tentzeris, “Inkjet-Printed Paper-Based RFID and Nanotechnology-Based Ultrasensitive Sensors: The “Green” Ultimate Solution for an Ever Improving Life Quality and Safety?”, Procs. 2010 IEEE Radio and Wireless Symposium (RWS), pp.120-123, New Orleans, LA, January 2010.
260. V.Lakafosis, R.Vyas and M.M.Tentzeris, “A Localization and Position Tracking Solution utilizing Solar-Powered RFID Tags”, Procs. of the 2010 European

Conference on Antennas and Propagation (EuCAP), Barcelona, SPAIN, April 2010.

261. T.Trang, A.Haque, J.Ratner, G.R.DeJean and M.M.Tentzeris, "Remote Sensing Structures Based on Surface Plasmon Resonances and Carbon Nanotubes", Procs. of the 2010 European Conference on Antennas and Propagation (EuCAP), Barcelona, SPAIN, April 2010.
262. A.Rida, G.Shaker, E.Tan, S.Nikolaou and M.M.Tentzeris, "Design, Integration and Packaging of a Wireless Module for Location Finding and Healthcare Applications", Procs. of the 2010 European Conference on Antennas and Propagation (EuCAP), Barcelona, SPAIN, April 2010.
263. Z.Konstas, A.Traille, K.Katsibas and M.M.Tentzeris, "A Novel Green Multi-Antenna Topology for Concurrent 4G Cellular and RFID-Enabled Wireless Sensor Data Bundling", Procs. of the 2010 European Conference on Antennas and Propagation (EuCAP), Barcelona, SPAIN, April 2010.
264. G.Orecchini, R.Zhang, J.Agar, D.Staiculescu, M.M.Tentzeris, L.Roselli and C.P.Wong, "Inkjet Printed Organic Transistors for Sustainable Electronics", Procs. of the IEEE 2010 Electronic Components and Technology Conference (ECTC), pp.985-989, Las Vegas, NV, May 2010.
265. M.M.Tentzeris, R.Vyas, V.Lakafosis, A.Traille, A.Rida and G.Shaker, "Inkjet-Printed System-on-Paper/Polymer "Green" RFID and Wireless Sensors", Procs. of the IEEE 2010 Electronic Components and Technology Conference (ECTC10), pp.1552-1555, Las Vegas, NV, May 2010. ***Best Session Paper Award***
266. V.Mukala, V.Lakafosis, A.Traille and M.M.Tentzeris, "A Novel Zigbee-based Low-cost Low-power Wireless EKG System", Procs. of the 2010 IMS Symposium, pp.624-627, Anaheim, CA, June 2010.
267. V.Lakafosis, A.Traille, H.Lee, G.Orecchini, E.Gebara, M.M.Tentzeris, J.Laskar, G.DeJean, D.Kirovski, "An RFID System with Enhanced Hardware-Enabled Authentication and Anti-counterfeiting Capabilities", Procs. of the 2010 IMS Symposium, pp.840-843, Anaheim, CA, June 2010.
268. T.T.Thai, M.Jatlaoui, P.Pons, H.Aubert, M.M.Tentzeris, G.R.DeJean and R.Plana, "A Novel Passive Wireless Ultrasensitive RF Temperature Transducer for Remote Sensing", Procs. of the 2010 IMS Symposium, pp.473-476, Anaheim, CA, June 2010.
269. R.Vyas, V.Lakafosis and M.Tentzeris, "Wireless Remote Localization System Utilizing Ambient RF/Solar Power Scavenging RFID Tags", Procs. of the 2010 IMS Symposium, pp.1764-1767, Anaheim, CA, June 2010.
270. L.Yang, G.Orecchini, G.Shaker, H.Lee and M.M.Tentzeris, "Battery-free RFID-enabled Wireless Sensor Nodes", Procs. of the 2010 IMS Symposium, pp.1528-1531, Anaheim, CA, June 2010.
271. F.Alimenti, V.Palazzari, G.Orecchini, G.Pinca, P.Mezzanotte, M.M.Tentzeris and L.Roselli, "Crossed Dipole Frequency Doubling RFIDTag Based on Paper

Substrate and Inkjet Printing Technology", Procs. of the 2010 IMS Symposium, pp.840-842, Anaheim, CA, June 2010.

272. F.Alimenti, M.Virili, P.Mezzanotte, V.Palazzari, M.M.Tentzeris and L.Roselli, "Low-Cost Assembly of UHF RFID Chips and Flexible Substrate Antennas by Magnetic Coupling Approach", Procs. of the 2010 IMS Symposium, pp.1532-1535, Anaheim, CA, June 2010.
273. X.Zhang, V.Lakafosis, A.Traille and M.M.Tentzeris, "Performance Analysis of "fast moving" RFID Tags in State-of-the-Art High-Speed Railway Systems", Procs. of the 2010 IEEE International Conference on RFID Technology and Applications (RFID-TA), pp.281-285, Guangzhou, June 2010.
274. R.Vyas, V.Lakafosis and M.Tentzeris, "Enabling Localization in WSN's with Solar-Powered End Devices", Procs. of the 2010 IEEE International Conference on Sensor Networks, Ubiquitous and Trustworthy Computing (SUTC), pp.155-160, CA, June 2010.
275. G.Shaker, M.Tentzeris and S.Safavi-Naeini, "Low-cost Antennas for mm-Wave Sensing Applications Using Inkjet Printing of Silver nanoparticles on Liquid Crystal Polymers", Procs. of the 2010 IEEE APS Symposium, Toronto, CANADA, July 2010.
276. V.Mukala, A.N.Traille, V.Lakafosis and M.M.Tentzeris, "Design and Development of a Novel Wireless EKG System Utilizing Low-Power Zigbee Standard", Procs. of the 2010 IEEE APS Symposium, Toronto, CANADA, July 2010.
277. G.Orecchini, L.Yang, M.M.Tentzeris and L.Roselli, "High Directivity Passive UHF RFID Tag with Dual Radiating-Body Antenna", Procs. of the 2010 IEEE APS Symposium, Toronto, CANADA, July 2010.
278. X.Zhou, R.L.Li and M.M.Tentzeris, "A Compact Broadband MIMO Antenna for Mobile Handset Applications", Procs. of the 2010 IEEE APS Symposium, Toronto, CANADA, July 2010.
279. R.Hasse, K.Naishadham, W.Hunsicker, M.M.Tentzeris and T.Wu, "Full-Wave Analysis of a Dual-Frequency Printed Slot Antenna with Microstrip Feed", Procs. of the 2010 IEEE APS Symposium, Toronto, CANADA, July 2010.
280. M.Y.Lai, R.L.Li and M.M.Tentzeris, "Low-Profile Broadband RFID Tag Antennas Mountable on Metallic Objects", Procs. of the 2010 IEEE APS Symposium, Toronto, CANADA, July 2010.
281. T.T.Thai, F.Chebila, J.M.Mehdi, P.Pons, H.Aubert, G.R.DeJean, M.M.Tentzeris and R.Plana, " A Novel Passive Ultrasensitive RF Temperature Transducer for Remote Sensing and Identification Utilizing Radar Cross Section Variability", Procs. of the 2010 IEEE APS Symposium, Toronto, CANADA, July 2010.
282. A.Rida, R.L.Li, P.Schmalenberg, J.S.Lee and M.M.Tentzeris, "Proximity Coupled Fed Antenna Arrays on LCP for mm-wave Applications", Procs. of the 2010 IEEE APS Symposium, Toronto, CANADA, July 2010.

283. G.Shaker, H.Lee, K.Duncan and M.Tentzeris, "Integrated Antenna with Inkjet-Printed Compact Artificial Magnetic Surface for UHF Applications", Procs. of the 2010 IEEE International Conference on Wireless Information Technology and Systems (ICWITS), Honolulu, HI, September 2010.
284. T.T.Thai, F.Chebila, J.M.Mehdi, P.Pons, H.Aubert, G.R.DeJean, M.M.Tentzeris and R.Plana, "Design and Development of a Millimetre-Wave Novel Passive Ultrasensitive Temperature Transducer for Remote Sensing and Identification", Procs. of the 2010 European Microwave Conference (EuMC), pp.45-48, Paris, FRANCE, October 2010.
285. A.Takacs, A.Coustou, H.Aubert and M.M.Tentzeris, " Electromagnetic Analysis of the Near-Field Coupling between an RFID Tag and Harness for Aeronautical Applications", Procs. PIERS 2011, Marrakech, MOROCCO, March 2011.
286. M.M.Tentzeris, A.Traille, H.Lee, R.Vyas, V.Lakafosis and A.Rida, "Inkjet-Printed Paper/Polymer-based "Green" RFID and Wireless Sensor Nodes", Procs. PIERS 2011, Marrakech, MOROCCO, March 2011.
287. V.Lakafosis, A.Traille, H.Lee, E.Gebara, M.M.Tentzeris, G.DeJean and D.Kirovski, "RFID-CoA: The RFID Tags as Certificates of Authenticity", Procs. Of the 2011 IEEE International Conference on RFID, pp.207-214, Orlando, FL, April 2011.
288. M.Marroncelli, D.Trinchero, V.Lakafosis and M.M.Tentzeris, Procs. Of the 2011 IEEE International Conference on RFID, pp.6-10, Orlando, FL, April 2011.
289. G.Shaker, A.Rida, S.Safavi-Naeini, M.M.Tentzeris and S.Nikolaou, "Inkjet Printing of UWB Antennas on Paper-Based Substrates", Procs. Of the 5th European Conference on Antennas and Propagation (EuCAP 2011), pp.3001-3004, Roma, ITALY, April 2011.
290. G.DeJean, V.Lakafosis, A.Traille, H.Lee, E.Gebara, M.M.Tentzeris and D.Kirovski, "RFDNA: A Wireless Authentication System on Flexible Substrates", Procs. Of the 2011 IEEE 61st Electronic Components and Technology Conference (ECTC), pp.1332-1337, Lake Buena Vista, FL, June 2011. ***Listed among the top-20 academic collaboration projects of Microsoft Research[add link].***
291. A.Traille and M.M.Tentzeris, "MultiResolution Time-Domain and Level-Set Techniques for Multi-Domain / Multi-Physics / Multi-Phase Simulations", Procs. Of the 2011 IEEE International Microwave Symposium (IMS), Baltimore, MD, June 2011.
292. T.T.Thai, H.Aubert, P.Pons, M.M.Tentzeris and R.Plana, "Design of a Highly Sensitive Wireless Passive RF Strain Transducer", Procs. of the 2011 IEEE International Microwave Symposium (IMS), Baltimore, MD, June 2011.
293. G.Orecchini, L.Yang, M.M.Tentzeris and L.Roselli, "Wearable Battery-free Active Paper-Printed RFID Tag with Human Energy Scavenger", Procs. Of the 2011 IEEE International Microwave Symposium (IMS), Baltimore, MD, June 2011. ***Best Student Paper Competition Finalist IMS 2011***

294. C.Occhiuzzi, A.Rida, G.Marrocco and M.M.Tentzeris, "CNT-Based RFID Passive Gas Sensor", Procs. Of the 2011 IEEE International Microwave Symposium (IMS), Baltimore, MD, June 2011.
295. R.DePaolis, S.Pacchini, F.Coccetti, G.Monti, L.Tarricone, M.M.Tentzeris and R.Plana, "Circuit Model of Carbon-Nanotube Inks for Microelectronic and Microwave Tunable Devices", Procs. Of the 2011 IEEE International Microwave Symposium (IMS), Baltimore, MD, June 2011.
296. R.Vyas, V.Lakafosis, M.M.Tentzeris, H.Nishimoto and Y.Kawahara, "A Battery-less Wireless Mote for Scavenging Wireless Power at UHF (470-570 MHz) Frequencies", Procs. Of the 2011 IEEE Antenna and Propagation Symposium, Spokane, WA, July 2011. ***Listed in CBS, NSF Homepage, MSNBC, CNN, Discovery Channel, IEEE The Institute and 500+ top High-Tech sites as one of the major technical inventions of the year***
297. C.Occhiuzzi, A.Rida, G.Marrocco and M.M.Tentzeris, "Passive Ammonia Sensor: RFID Tag Integrating Carbon Nanotubes", Procs. Of the 2011 IEEE Antenna and Propagation Symposium, Spokane, WA, July 2011.
298. G.Orecchini, L.Yang, M.M.Tentzeris and L.Roselli, " "Smart Shoe": An Autonomous Inkjet-Printed RFID System Scavenging Walking Energy", Procs. Of the 2011 IEEE Antenna and Propagation Symposium, Spokane, WA, July 2011.
299. H.Lee, G.Shaker, K.Naishadham and M.M.Tentzeris, "A Novel Highly-Sensitive Antenna-based "Smart Skin" Gas Sensor Utilizing Carbon Nanotubes and Inkjet Printing", Procs. Of the 2011 IEEE Antenna and Propagation Symposium, Spokane, WA, July 2011. ***Best Student Paper Competition Honorable Mention APS 2011***
300. X.Quan, R.L.Li and M.M.Tentzeris, "A Novel Broadband Omni-Directional Circularly Polarized Antenna for Mobile Communications", Procs. Of the 2011 IEEE Antenna and Propagation Symposium, Spokane, WA, July 2011. ***Best Student Paper Competition Honorable Mention APS 2011.***
301. T.Zhang, M.M.Tentzeris and R.L.Li, "A Dual-Frequency Broadband Antenna for Mobile Phone Applications", Procs. Of the 2011 IEEE Antenna and Propagation Symposium, Spokane, WA, July 2011.
302. A.Rida, S.Nikolaou and M.M.Tentzeris, "Design of Low-Cost Microstrip Antenna Arrays for mm-Wave Applications", Procs. Of the 2011 IEEE Antenna and Propagation Symposium, Spokane, WA, July 2011.
303. M.Marroncelli, D.Trinchero and M.M.Tentzeris, " Paper-Based Inkjet-Printed Text-Meandered UHF Resonant Antennas for RFID's", Procs. Of the 2011 URSI General Assembly, Istanbul, TURKEY, August 2011.
304. A.Traille and M.M.Tentzeris, "Liquid RF Antennas, Electronics and Sensors: A Modeling Challenge", Procs. Of the 2011 URSI General Assembly, Istanbul,

TURKEY, August 2011. ***National Academy of Engineering (NAE) Travel Grant Award.***

305. S.Beck, S.T.Kim, K.Lim, M.M.Tentzeris, "A Multi-Band WCDMA SAW-less Receiver with a Frequency Selective Feedback Loop", Procs. 54th International Midwest Symposium on Circuits and Systems (MWSCAS), Seoul, KOREA, August 2011..

306. A.Rida, V.Lakafosis, R.Vyas, M.M.Tentzeris and S.Nikolaou, "Review of Technologies for Low-Cost Integrated Sensors", Procs. 2011 IEEE International Conference on RFID Technologies and Applications (RFID-TA), pp.513-520, Barcelona, SPAIN, September 2011.

307. X.Yi, T.Wu, G.Lantz, J.Cooper, C.Cho, Y.Wang, M.M.Tentzeris and R.T.Leon, "Sensing Resolution and Measurement Range of a Passive Wireless Strain Sensor", Procs. 8th International Workshop on Structural Health Monitoring, Stanford, CA, September 2011. ***Best Student Paper Award***

308. A.Traille, S.Bouaziz, H.Aubert, P.Pons and M.M.Tentzeris, "A Novel Wireless Passive Temperature Sensor Utilizing Microfluidic Principles in Millimeter-Wave Frequencies", Procs. IEEE Sensors 2011 Conference, pp.524-525, Limerick, IRELAND, October 2011.

309. V.Lakafosis, X.Yi, T.Le, E.Gebara, Y.Wang and M.M.Tentzeris, " Wireless Sensing with Smart Skins", Invited Paper to the IEEE Sensors 2011 Conference, pp.623-626, Limerick, IRELAND, October 2011.

310. T.T.Thai, H.Aubert, P.Pons, R.Plana and M.M.Tentzeris, "A Newly Developed Radio Frequency Wireless Passive Highly Sensitive Strain Transducer", Procs. IEEE Sensors 2011 Conference, pp.211-214, Limerick, IRELAND, October 2011.

311. A.Traille, S.Bouaziz, S.Pinon, P.Pons, H.Aubert, M.M.Tentzeris and A.Boukabache, "A Wireless Temperature Sensor Using Liquid Metal and Microfluidic Technologies", Procs. European Microwave Week 2011, Manchester, UK, October 2011.

312. G.Shaker, H.Lee, S.Safavi-Naeini and M.M.Tentzeris, "Printed Electronics for Next Generation Wireless Devices", Procs. 2011 Antennas and Propagation Conference (LAPC 2011), Loughborough, UK, November 2011.

313. F.Ciuppi, A.Georgiadis, S.Via, A.Collado, R.Vyas, M.M.Tentzeris and M.Bozzi, "A 927 MHz Solar Powered Active Antenna Oscillator Beacon Signal Generator", Procs. 2012 IEEE Conference on Wireless Sensors and Sensor Networks (WiSNeT 2012), Santa Clara, CA, January 2012. ***Best Student Paper Award Finalist***

314. Le, Taoran; Lakafosis, Vasileios; Lin, Ziyin; Wong, C. P.; Tentzeris, M. M.; , "Inkjet-printed graphene-based wireless gas sensor modules," Procs. 2012 IEEE Electronic Components and Technology Conference (ECTC), pp.1003-1007, June 2012, San Diego, CA.

315. A.Georgiadis, A.Collado, S.Kim, H.Lee and M.M.Tentzeris, "UHF solar powered active oscillator antenna on low cost flexible substrate for wireless identification applications", Procs. 2012 IEEE International Microwave Symposium, pp.1-3, June 2012, Montreal, CANADA.
316. H.Lee, S.Kim, D.De Donno and M.M.Tentzeris, "A novel "Universal" inkjet-printed EBG-backed flexible RFID for rugged on-body and metal mounted applications", Procs. 2012 IEEE International Microwave Symposium, pp.1-3, June 2012, Montreal CANADA. ***Best Student Paper Finalist***
317. R.Vyas, H.Nishimoto, M.M.Tentzeris, Y.Kawahara and T.Asami, "A battery-less, energy harvesting device for long range scavenging of wireless power from terrestrial TV broadcasts", Procs. 2012 IEEE Internatinal Microwave Symposium , pp.1-3, June 2012, Montreal, CANADA. ***Best Student Paper Finalist***
318. S.Kim, M.M.Tentzeris, G.Jin, S.Nikolaou, ``Inkjet Printed Ultra Wideband Spiral Antenna Using Integrated Balun on Liquid Crystal Polymer (LCP)", Procs. 2012 IEEE International Symposium on Antennas and Propagation, pp.1-2, July 2012, Chicago, IL.
319. H.Lee, F.Bush, M.M.Tentzeris and G.Shaker, ``Inkjet-Printed Cylindrical EBG for Low-Cost Omnidirectional Antennas Using Split-Ring Resonators", Procs. 2012 IEEE International Symposium on Antennas and Propagation, pp.1-2, July 2012, Chicago, IL.
320. H.Lee, M.M.Tentzeris and J.Geiger, ``Flexible Spiral Antenna with Microstrip Tapered Infinite Balun for Wearable Applications", Procs. 2012 IEEE International Symposium on Antennas and Propagation, pp.1-2, July 2012, Chicago, IL.
321. S.Kim, M.M.Tentzeris, S.Nikolaou, ``Wearable Biomonitoring Monople Antennas Using Inkjet Printed Electromagnetic Band gap Structures", Procs. 2012 IEEE International Symposium on Antennas and Propagation, pp.1-2, July 2012, Chicago, IL.
322. S.Palacios, S.Kim, S.Elia, A.Rida, M.M.Tentzeris and S.Nikolaou, ``Inkjet-Printed Planar Antenna for a Wireless Sensor on Paper Operating at WiFi Frequencies", Procs. 2012 IEEE International Symposium on Antennas and Propagation, pp.1-2, July 2012, Chicago, IL.
323. D.DeDonno, L.Tarricone, V.Lakafosis and M.M.Tentzeris, ``Multipacket Reception MAC Schemes for the RFID EPC Gen2 Protocol", Procs. 2012 International Symposium on Wireless Communication Systems (ISWCS), pp.311-315, August 2012, Paris, FRANCE.
324. H.Lee, M.M.Tentzeris, Y.Kawahara and A.Georgiadis, ``Novel Inkjet-Printed Ferromagnetic-Based Solutions for Miniaturized Wireless Power Transfer (WPT) Inductors and Antennas", Procs.2012 International Symposium on Antennas and Propagation (ISAP), pp.14-17, October 2012, JAPAN.
325. T.Le, V.Lakafosis, Z.Lin, M.M.Tentzeris and C.P.Wong, "A Novel Graphene-Based Inkjet-Printed WISP-Enabled Gas Sensor", Procs. 2012 European

Microwave Conference, Amsterdam, NETHERLANDS, November 2012. ***Listed among Best Conference Papers.***

326. R.Moro, M.Bozzi, S.Kim and M.M.Tentzeris, "Substrate Integrated Waveguide Components in Paper-Based Inkjet-Printed Technologies", Procs. 2012 European Microwave Conference, Amsterdam, NETHERLANDS, November 2012. ***Listed among Best Conference Papers.***

327. R.Shigeta, T.Sasaki, D.M.Quan, Y.Kawahara, R.Vyas, M.Tentzeris and T.Asami, "Ambient RF Energy Harvesting Sensor Node with Capacitor-Leakage-Aware Duty Cycle Control", Procs. 2012 IEEE Sensors Conference, Taipei, TAIWAN, November 2012. ***Second Best Paper Award Prize***

328. T.Le, T.Thai, V.Lakafosis, M.Tentzeris, Z.Lin, Y.Fang, K.Sandhage, C.P.Wong, ``Graphene-Enhanced Wireless Sensors", Procs. 2012 IEEE Sensors Conference, pp.1-4, Taipei, TAIWAN, November 2012.

329. J.R.Cooper and M.M.Tentzeris, ``Novel "Smart-Cube" Wireless Sensors with Embedded Processing/Communication/Power Core for "Smart Skin" Applications", Procs. 2012 IEEE Sensors Conference, pp.1-4, Taipei, TAIWAN, November 2012.

330. J.Virkki, J.Virtanen, L.Sydanheimo, L.Ukkonen and M.Tentzeris, ``Embedding Inkjet-Printed Antennas into Plywood Structures for Identification and Sensing", Procs. 2012 IEEE International Conference on RFID Technologies and Applications (RFID-TA), pp.34-39, Nice, FRANCE, November 2012.

331. H.Aubert, F.Chebila, M.Jatlaoui, T.Thai, H.Hallil, A.Traille, S.Bouaziz, A.Rifai, P.Pons, P.Menini and M.Tentzeris, ``Wireless Sensing and Identification of Passive Electromagnetic Sensors based on Millimeter-Wave FMCW Radar", Procs. 2012 IEEE International Conference on RFID Technologies and Applications (RFID-TA), pp.398-403, Nice, FRANCE, November 2012.

332. L.Aluigi, T.T.Thai, M.M.Tentzeris, L.Roselli, F.Alimenti, ``Heterogeneous Integration of Flexible Substrate Spiral Antennas and Silicon Chips by Magnetic Coupling", Procs. 2012 Asia-Pacific Microwave Conference, pp.848-850, TAIWAN, December 2012.

333. C.Mariotti, V.Lakafosis, M.M.Tentzeris and L.Roselli, ``An IPv6-enabled Wireless Shoe-Mounted Platform for Health Monitoring", Procs. 2013 IEEE Topical Conference on Wireless Sensors and Sensor Networks (WiSNet), pp.46-48, Austin, TX, January 2013. Invited Paper

334. L.Aluigi, T.T.Trang, M.M.Tentzeris, L.Roselli and F.Alimenti, ``Chip-to-Package Wireless Power Transfer and its Application to mm-Wave Antennas and Monolithic Radiometric Receivers", Procs. 2013 IEEE Radio and Wireless Symposium (RWS), pp.202-204, Austin, TX, January 2013.

335. Y.Kawahara, W.Wei, Y.Narusue, R.Shigeta, T.Asami and M.M.Tentzeris, ``Virtualizing Power Cords by Wireless Power Transmission and Energy Harvesting", Procs. 2013 IEEE Radio and Wireless Symposium (RWS), pp.37-39, Austin, TX, January 2013.

336. T.Bjorninen, J.Virkki, J.Virtanen, L.Sydanheimo, L.Ukkonen and M.M.Tentzeris, ``Inkjet-Printing and Performance Evaluation of UHF RFID Tag Antennas on Renewable Materials with Porous Surfaces", Procs. 2013 European Conference on Antennas and Propagation (EuCAP), pp.1721-1725, SWEDEN, March 2013.

337. H.Aubert, P.Pons and M.M.Tentzeris, ``Wireless Remote Sensing Based on Radar Cross Section Variability Measurement of Passive Electromagnetic

Sensors", Procs. 2013 European Conference on Antennas and Propagation (EuCAP), pp.1714-1717, SWEDEN, March 2013.

338. S.Kim, R.Moro, M.Bozzi, S.Nikolaou and M.M.Tentzeris, ``Inkjet-Printed Wearable Microwave Components for Biomedical Applications", Procs. 2013 European Conference on Antennas and Propagation (EuCAP), pp.1714-1717, SWEDEN, March 2013.
339. O.Jonah, S.V.Georgakopoulos and M.M.Tentzeris, ``Wireless Power Transfer to Mobile Wearable Devices via Magnetic Resonance", Procs. 2013 IEEE Wireless and Microwave Technology Conference (WAMICON), pp.1714-1717, Orlando, FL, April 2013.
340. A.Vena, E.Moradi, K.Koski, A.A.Babar, L.Sydanheimo, L.Ukkonen and M.M.Tentzeris, ``Design and Realization of Stretchable Sewn Chipless RFID Tags and Sensors for Wearable Applications", Procs. 2013 IEEE International Conference on RFID, pp.176-183, Orlando, FL, pp.176-183, April 2013.
341. O.Jonah, S.V.Georgakopoulos and M.M.Tentzeris, ``Orientation-Insensitive Power Transfer by Magnetic Resonance in Mobile Devices", Procs. 2013 IEEE Wireless Power Transfer Conference (WPTC), pp., Perugia, ITALY, May 2013. ***Second Best Paper Award***
342. T.Le, Z.Lin, C.P.Wong and M.M.Tentzeris, ``Novel Enhancement Techniques for Ultra-High-Performance Conformal Wireless Sensors and "Smart Skins" Utilizing Inkjet-Printed Graphene", Procs. 2013 IEEE Conference on Electronic Components and Technology (ECTC), pp.1640-1643, Las Vegas, NV, May 2013.
343. B.S.Cook, J.R.Cooper, S.Kim and M.M.Tentzeris, ``A Novel Inkjet-Printed Passive Microfluidic RFID-Based Sensing Platform", Procs. 2013 IEEE International Microwave Symposium (IMS), pp., Seattle, WA, June 2013.
344. S.Kim, B.Cook, J.Cooper, A.Traille, A.Georgiadis, H.Aubert and M.M.Tentzeris, ``A Novel Dual-Band Retrodirective Reflector Array on Paper Utilizing Substrate Integrated Waveguide (SIW) and Inkjet Printing Technologies for Chipless RFID Tag and Sensor Applications", Procs. 2013 IEEE International Microwave Symposium (IMS), pp., Seattle, WA, June 2013.
345. R.Vyas, B.Cook, Y.Kawahara and M.M.Tentzeris, ``A Self-sustaining Autonomous Wireless Sensor Beacon Powered from Long-Range Ambient RF Energy", Procs. 2013 IEEE International Microwave Symposium (IMS), pp., Seattle, WA, June 2013.
346. R.De Paolis, T.Le, F.Coccetti, G.Monti, L.Tarricone and M.M.Tentzeris, ``A Novel Circuit Model of Nanotechnology-Enabled Inkjet-Printed Gas Sensors Using Multi-Wall Carbon Nanotubes", Procs. 2013 IEEE International Microwave Symposium (IMS), pp., Seattle, WA, June 2013.
347. S.Kim, Y.Kawahara, A.Georgiadis, A.Collado and M.M.Tentzeris, ``Low-Cost Inkjet-Printed Fully Passive RFID Tags Using Metamaterial-inspired Antennas for Capacitive Sensing Applications", Procs. 2013 IEEE International Microwave Symposium (IMS), pp., Seattle, WA, June 2013.
348. A.Rifai, E.Debourg, S.Bouaziz, A.Traille, P.Pons, H.Aubert and M.M.Tentzeris, ``Wireless Chipless Passive Microfluidic Temperature Sensor", Procs. 2013 International Conference on Transducers and Eurosensors, pp.1024-1027, Barcelona, SPAIN, June 2013.
349. W.Su, B.Cook, M.Tentzeris, C.Mariotti and L.Roselli, "A Novel Inkjet-Printed Microfluidic Tunable Coplanar Patch Antenna", Procs. 2014 IEEE Antennas and Propagation International Symposium (APS), pp.858-859, Memphis, TN, July 2014.

350. P.Pons, H.Aubert and M.Tentzeris, "Overview of electromagnetic transducers with radar interrogation for passive wireless sensors applications", Procs. 2014 20th International Conference on Microwaves, Radar, and Wireless Communication (MIKON), pp.1-3, Gdansk, POLAND, June 2014.
351. S.Yao, X.Liu, S.V.Georgakopoulos and M.M.Tentzeris, "A novel reconfigurable origami spring antenna", Procs. 2014 IEEE Antennas and Propagation International Symposium (APS), pp.374-375, Memphis, TN, July 2014.
352. A.Traille, S.Kim, A.Coustou, H.Aubert and M.M.Tentzeris, "A conformal/rollable monolithic miniaturized ultra-portable ground penetrating radar using additive and inkjet printing", Procs. 2014 IEEE MTT-S International Microwave Symposium (IMS), pp.1-4, Tampa Bay, FL, June 2014.
353. A.Traille, A.Coustou, H.Aubert, S.Kim, J.Kimionis, M.M.Tentzeris, A.Georgiadis, A.Collado, "Novel Inkjet Printed Modules for Sensing, Radar and Energy Harvesting Applications", Procs. 2014 44th European Microwave Conference (EuMC), pp.1-4, Paris, FRANCE, October 2014.
354. S.Jang, S.Kim and M.M.Tentzeris, "Low-cost flexible RFID tag for on-metal applications", Procs. 2014 IEEE Antennas and Propagation International Symposium (APS), pp.1298-1299, Memphis, TN, July 2014.
355. S.Yao, S.V.Georgakopoulos, B.Cook and M.M.Tentzeris, "A novel reconfigurable origami accordion antenna", Procs. 2014 IEEE MTT-S International Microwave Symposium (IMS), pp.1-4, Tampa Bay, FL, June 2014.
356. X.Liu, S.Yao, S.V.Georgakopoulos, B.S.Cook and M.M.Tentzeris, "Reconfigurable helical antenna based on an origami structure for wireless communication system", Procs. 2014 IEEE MTT-S International Microwave Symposium (IMS), pp.1-4, Tampa Bay, FL, June 2014.
357. C.Mariotti, L.Aluigi, T.T.Thai, F.Alimenti, L.Roselli and M.M.Tentzeris, "A fully inkjet-printed 3D transformer balun for conformal and rollable microwave applications", Procs. 2014 IEEE Antennas and Propagation International Symposium (APS), pp.330-331, Memphis, TN, July 2014.
358. S.Kim, H.Aubert and M.M.Tentzeris, "An inkjet-printed flexible broadband coupler in substrate integrated waveguide (SIW) technology for sensing, RFID and communication applications", Procs. 2014 IEEE MTT-S Microwave Symposium (IMS), pp.1-4, Tampa Bay, FL, June 2014.
359. D.Daerhan, O.Jonah, H.Hu, S.V.Georgakopoulos and M.M.Tentzeris, "Novel highly-efficient and misalignment insensitive wireless power transfer systems utilizing Strongly Coupled Magnetic Resonance principles", Procs. 2014 IEEE 64th Electronic Components and Technology Conference (ECTC), pp.759-762, Orlando, FL, May 2014.
360. S.Kim, T.Le, M.M.Tentzeris, A.Harrabi, A.Collado and A.Georgiadis, "An RFID-enabled inkjet-printed soil moisture sensor on paper for “smart” agricultural applications", Procs. 2014 IEEE Sensors Conference, pp.1507-1510, Valencia, SPAIN, November 2014.
361. J.Bito, B.Tehrani, B.Cook and M.Tentzeris, "Fully inkjet-printed multilayer microstrip patch antenna for Ku-band applications", Procs. 2014 IEEE Antennas and Propagation International Symposium (APS), pp.854-855, Memphis, TN, July 2014.
362. R.J.Vyas, J.Bito, S.Kim and M.M.Tentzeris, "Harvesting wireless signals from two-way talk-radios to power smart meters and displays", Procs. 2014 IEEE MTT-S International Microwave Symposium (IMS), pp.1-4, Tampa Bay, FL, June 2014.

363. H.Saghlatoon, L.Sydanheimo, L.Ukkonen and M.M.Tentzeris, "Optimized RF/microwave antennas and circuits on low-cost fibrous substrates using inkjet-printing technology", Procs. 2014 IEEE Antennas and Propagation International Symposium (APS), pp.322-323, Memphis, TN, July 2014.
364. M.Yoo, S.Lim and M.Tentzeris, "Flexible inkjet-printed metamaterial paper absorber", Procs. 2014 IEEE Antennas and Propagation International Symposium (APS), pp.2060-2061, Memphis, TN, July 2014.
365. J.Kimionis, M.M.Tentzeris and S.Nikolaou, "Inkjet-printed UHF RFID folded dipole antennas for remote sensing applications", Procs. 2014 IEEE Antennas and Propagation International Symposium (APS), pp.332-333, Memphis, TN, July 2014.
366. A.Traille, A.Coustou, H.Aubert, S.Kim and M.M.Tentzeris, "A Technology for fully printable and rollable ground penetrating radar (GPR) systems", Procs. 2014 IEEE Antennas and Propagation International Symposium (APS), pp.334-335, Memphis, TN, July 2014.
367. J.Kimionis, A.Georgiadis, S.Kim, A.Collado, K.Niotaki and M.M.Tentzeris, "An enhanced-range RFID tag using an ambient energy powered reflection amplifier", Procs. 2014 IEEE MTT-S International Microwave Symposium (IMS), pp.1-4, Tampa Bay, FL, June 2014.
368. Y.-H.Di, X.-Y.Liu and M.M.Tentzeris, "A conformable dual-band antenna equipped with AMC for WBAN applications", Procs. 2014 3rd Asia-Paciic Conference on Antennas and Propagation (APCAP), pp.388-391, Harbin, CHINA, July 2014.
369. X.Liu, S.Yao, S.V.Georgakopoulos and M.Tentzeris, "Origami Quadrifilar Helix Antenna in UHF band", Procs. 2014 IEEE Antennas and Propagation International Symposium (APS), pp.372-373, Memphis, TN, July 2014..
370. J.Bito, S.Kim, M.Tentzeris and S.Nikolaou, "Ambient energy harvesting from 2-way talk-radio signals for “smart” meter and display applications", Procs. 2014 IEEE Antennas and Propagation International Symposium (APS), pp.1353-1354, Memphis, TN, July 2014.
371. M.Hasani, A.Vena, L.Sydanheimo, L.Ukkonen and M.M.Tentzeris, "A novel RFID-enabled strain sensor using the double power measurement technique", Procs. 2014 IEEE MTT-S International Microwave Symposium (IMS), pp.1-4, Tampa Bay, FL, June 2014.
372. B.Tehrani, B.Cook, J.Cooper and M.Tentzeris, "Inkjet printing of a wideband, high gain mm-Wave Vivaldi antenna on a flexible organic substrate", Procs. 2014 IEEE Antennas and Propagation International Symposium (APS), pp.320-321, Memphis, TN, July 2014.
373. Y.He, Z.Pan, J.Yang, G.Sun and M.M.Tentzeris, "Effect of feeder cable's phase tolerance on the first sidelobe level of base station antenna", Procs. 2014 International Wireless Communications and Mobile Computing Conference (IWCMC), pp.1022-1026, Nicosia, CYPRUS, August 2014.
374. R.Goncalves, J.Hester, N.Carvalho, P.Pinho and M.Tentzeris, "Passive sensors for food quality monitoring and counterfeiting", Procs. 2014 IEEE Sensors Conference, pp.1511-1514, Valencia, SPAIN, November 2014.
375. A.Vena, M.Tedjini, T.Bjorninen, L.Sydanheimo, L.Ukkonen and M.M.Tentzeris, "A novel inkjet-printed wireless chipless strain and crack sensor on flexible laminates", Procs. 2014 IEEE Antennas and Propagation International Symposium (APS), pp.1294-1295, Memphis, TN, July 2014.

376. S.-H.Zheng, X.-Y.Liu and M.M.Tentzeris, "A novel optically controlled reconfigurable antenna for cognitive radio systems", Procs. 2014 IEEE Antennas and Propagation International Symposium (APS), pp.1246-1247, Memphis, TN, July 2014.
377. B.K.Tehrani, J.Bito, B.S.Cook and M.M.Tentzeris, "Fully inkjet-printed multilayer microstrip and T-resonator structures for the RF characterization of printable materials and interconnects", Procs. 2014 IEEE MTT-S International Microwave Symposium (IMS), pp.1-4, Tampa Bay, FL, June 2014.
378. A.Vena, L.Sydanheimo, L.Ukkonen and M.M.Tentzeris, "A fully inkjet-printed chipless RFID gas and temperature sensor on paper", Procs. 2014 IEEE RFID Technology and Applications Conference (RFID-TA), pp.115-120, Tampere, FINLAND, September 2014.
379. S.Kim, M.M.Tentzeris and H.Aubert, "An inkjet-printed flexible broadband multilayer SIW coupler for antenna array systems", Procs. 2014 IEEE Antennas and Propagation International Symposium (APS), pp.324-325, Memphis, TN, July 2014.
380. B.S.Cook, C.Mariotti, J.R.Cooper, D.Revier, B.K.Tehrani, L.Aluigi, L.Roselli and M.M.Tentzeris, "Inkjet-printed, vertically-integrated, high-performance inductors and transformers on flexible LCP substrate", Procs.2014 IEEE MTT-S International Microwave Symposium (IMS), pp.1-4, Tampa Bay, FL, June 2014.
381. W.Su, C.Mariotti, B.S.Cook, S.Lim, L.Roselli and M.M.Tentzeris, "A metamaterial-inspired temperature stable inkjet-printed microfluidic-tunable bandstop filter", Procs. 2014 44th European Microwave Conference (EuMC), pp.9-12, Rome, ITALY, October 2014.
382. J.Kimionis and M.M.Tentzeris, "RF tag front-end design for uncompromised communication and harvesting", Procs. 2014 IEEE RFID Technology and Applications Conference (RFID-TA), pp.109-114, Tampere, FINLAND, September 2014. ***Best Student Paper Award***
383. S.Yao, X.Liu, S.V.Georgakopoulos and M.M.Tentzeris, "A novel tunable origami accordion antenna", Procs. 2014 IEEE Antennas and Propagation International Symposium (APS), pp.370-371, Memphis, TN, July 2014.
384. A.Traille, A.Georgiadis, A.Collado, Y.Kawahara, H.Aubert and M.M.Tentzeris, "Inkjet-printed “Zero-Power” wireless sensor and power management nodes for IoT and “Smart Skin” applications", Procs. 2014 XXXIth URSI General Assembly and Scientific Symposium (URSI GASS), pp.1-4, August 2014.
385. K.Niotaki, S.Kim, F.Giuppi, A.Collado, A.Georgiadis and M.M.Tentzeris, "Optimized design of multiband and solar rectennas", Procs. 2014 IEEE Topical Conference on Wireless Sensors and Sensor Networks (WiSNet), pp.31-33, Newport Beach, CA, January 2014.
386. J.R.Cooper, B.S.Cook and M.M.Tentzeris, "The first hardware-based, anti-collision methodology for frequency doubling transceivers for RFID and wireless sensing applications", Procs. 2014 IEEE MTT-S International Microwave Symposium (IMS), pp.1-4, Tampa Bay, FL, June 2014.
387. T.Le, Z.Lin, C.P.Wong and M.M.Tentzeris, "Enhanced-performance wireless conformal "smart skins" utilizing inkjet-printed carbon-nanostructures", Procs. 2014 IEEE 64th Electronic Components and Technology Conference (ECTC), pp.769-774, Orlando, FL, May 2014.
388. J.Kimionis, M.M.Tentzeris, A.Georgiadis and A.Collado, "Inkjet-printed reflection amplifier for increased-range Backscatter radio", Procs. 2014 44th European Microwave Conference (EuMC), pp.5-8, Rome, ITALY, October 2014.

389. M.M.Tentzeris, S.Kim, R.Vyas, A.Traille, P.Pons, H.Aubert, A.Georgiadis and A.Collado, "Inkjet-printed “Zero-Power” wireless sensor and power management nodes for IoT and “Smart Skin” applications", Procs. 2014 20th International Conference on Microwaves, Radar, and Wireless Communication (MIKON), pp.1-7, Gdansk, POLAND, June 2014.
390. C.D.Saintsing, K.Yu, H.J.Qi and M.M.Tentzeris, "Planar Monopole Antennas on Substrates Fabricated Through an Additive Manufacturing Process", Proc. of the 2015 IEEE Radio and Wireless Symposium (RWS), pp.159-161, January 2015.
391. Z.Khonsari, T.Bjorninen, M.M.Tentzeris, L.Sydanheimo and L.Ukkonen, "2.4 GHz Inkjet-Printed RF Energy Harvester on Bulk Cardboard Substrate", Proc. of the 2015 IEEE Radio and Wireless Symposium (RWS), pp.153-155, January 2015.
392. A.Georgiadis, A.Collado, S.Kim and M.M.Tentzeris, "Inkjet-Printed Meta-Material Inspired Passive Antenna Sensor for UHF RFID Systems", Proc. of the 2015 International Workshop on Antenna Technology (iWAT), March 2015, Seoul, KOREA, pp.92-94.
393. K.Ling, M.Yoo, K.Kim, S.Lim, W.Su, B.Cook and M.M.Tentzeris, "Microfluidically Tunable Paper-Based Inkjet-Printed Metamaterial Absorber", Proc. of the 2015 International Workshop on Antenna Technology (iWAT), March 2015, Seoul, KOREA, pp.218-220.
394. X.Liu, S.V.Georgakopoulos and M.M.Tentzeris, "A Novel Mode and Frequency Reconfigurable Origami Quadrifilar Helical Antenna", Proc. of the 2015 IEEE Wireless and Microwave Technology Conference (WAMICON), April 2015, Cocoa Beach, FL, pp.1-3.
395. W.Su, B.S.Cook and M.M.Tentzeris, "Low-COST Microfluidics-Enabled Tunable Loop Antenna Using Inkjet-Printing Technologies", Proc. of the 2015 EuCAP Symposium, Lisbon, PORTUGAL, April 2015, pp.1-2.
396. E.Sipila, Y.Ren, J.Virkki, L.Sydanheimo, M.M.Tentzeris and L.Ukkonen, "Parametric Optimization of Inkjet Printing and Optical Sintering of Nanoparticle Inks", Proc. of the 2015 EuCAP Symposium, Lisbon, PORTUGAL, April 2015, pp.1-4.
397. R.Martinez, J.Kimionis, A.Georgiadis, A.Collado, M.Tentzeris, G.Goussetis and J.L.Tornero, "Circularly Polarized Shorted Ring Slot Rectenna with a Mesh Design for Optimized Inkjet Printing on Paper Substrate", Proc. of the 2015 EuCAP Symposium, Lisbon, PORTUGAL, April 2015, pp.1-3.
398. R.Goncalves, P.Pinho, N.Carvalho and M.M.Tentzeris, "Humidity Passive Sensors Based on UHF RFID Using Cork Dielectric Slabs", Proc. of the 2015 EuCAP Symposium, Lisbon, PORTUGAL, April 2015, pp.1-4.
399. J.Bito, S.Jeong and M.M.Tentzeris, "A Real-Time Electrically Controlled Active Matching Circuit Utilizing Genetic Algorithms for Biomedical WPT Applications", Proc. of the 2015 IEEE Wireless Power Transfer Conference (WPTC), pp.1-4, May 2015, Boulder, CO.
400. T.Le, B.Song, Q.Liu, R.A.Bahr, S.Moscato, C.P.Wong and M.M.Tentzeris, "A Novel Strain Sensor Based on 3D Printing Technology and 3D Antenna Design", Proc. of the 2015 IEEE ECTC Conference, May 2015, San Diego, CA, pp.981-986.
401. C.Mariotti, B.S.Cook, F.Alimenti, L.Roselli and M.M.Tentzeris, "Additively Manufactured Multilayer High-Performance RF Passive Components on Cellulose

Substrates for Internet-of-Things Electronic Circuits", Proc. of the 2015 IMS Symposium, Phoenix, AZ, May 2015, pp.1-4.

402. S.Kim, J.Bito, S.Jeong, A.Georgiadis and M.M.Tentzeris, "A Flexible Hybrid Printed RF Energy Harvester Utilizing Catalyst-Based Copper Printing Technologies for Far-Field RF Energy Harvesting Applications", Proc. of the 2015 IMS Symposium, Phoenix, AZ, May 2015, pp.1-4.

403. J.Bito, J.G.Hester and M.M.Tentzeris, "Ambient Energy Harvesting from a Two-Way Talk Radio for Flexible Wearable Devices Utilizing Inkjet Printing Masking", Proc. of the 2015 IMS Symposium, Phoenix, AZ, May 2015, pp.1-4.

404. J.Kimionis, A.Georgiadis, M.Isakov, H.J.Qi and M.M.Tentzeris, "3D/Inkjet-Printed Origami Antennas for Multi-Direction RF Harvesting", Proc. of the 2015 IMS Symposium, Phoenix, AZ, May 2015, pp.1-4. ***Best Student Paper Award Finalist***

405. A.Traille and M.M.Tentzeris, "Status and Challenges of Inkjet-Printed RF and THz Structures", Proc. of the 2015 IEEE MTT-S International Microwave Workshop Series on Advanced Materials and Processes for RF and THz Applications (IMWS-AMP), Suzhou, CHINA, July 2015, pp.1-2.

406. J.Bito and M.M.Tentzeris, "A Novel Flexible Wearable Magnetic Energy Harvester Utilizing Inkjet Masking Techniques", Proc. of the 2015 APS Symposium, Vancouver, CANADA, July 2015, pp.204-205.

407. B.K.Tehrani, B.S.Cook and M.M.Tentzeris, "Post-Process Fabrication of Multilayer mm-Wave On-Package Antennas with Inkjet Printing", Proc. of the 2015 APS Symposium, Vancouver, CANADA, July 2015, pp.607-608.

408. S.A.Nauroze and M.M.Tentzeris, "A Novel Printed Stub-Loaded Square Helical Antenna", Proc. of the 2015 APS Symposium, Vancouver, CANADA, July 2015, pp.774-775.

409. Y.Pan, Y.Cui, R.L.Li and M.M.Tentzeris, "A Dual-Polarized Triple-Band MIMO Antenna for WLAN/WiMAX Applications", Proc. of the 2015 APS Symposium, Vancouver, CANADA, July 2015, pp.934-935.

410. J.H.Kim, J.Bito and M.M.Tentzeris, "Design Optimization of an Energy Harvesting RF-DC Conversion Circuit Operating at 2.45 GHz", Proc. of the 2015 APS Symposium, Vancouver, CANADA, July 2015, pp.1280-1281.

411. Z.Khonsari, T.Bjorninen, L.Sydanheimo, M.Tentzeris and L.Ukkonen, "Inkjet-Printed Monopole Antenna and Voltage Doubler on Cardboard for RF Energy Harvesting", Proc. of the 2015 APS Symposium, Vancouver, CANADA, July 2015, pp.1312-1313.

412. W.He, Y.He and M.M.Tentzeris, "Modeling, Design and Experimentation of a UHF RFID Tag Antenna Embedded in Railway Tickets", Proc. of the 2015 APS Symposium, Vancouver, CANADA, July 2015, pp.1416-1417.

413. Y.He, Y.He and M.M.Tentzeris, "A Broadband Dual-Polarization Base Station Antenna Element with a Coupling Feed", Proc. of the 2015 APS Symposium, Vancouver, CANADA, July 2015, pp.2001-2002.

414. S.Moscato, M.Pasian, M.Bozzi, L.Perregrini, R.Bahr, T.Le and M.M.Tentzeris, "Exploiting 3D Printed Substrates for Microfluidic SIW Sensors", Proc. of the 2015 EuMW Symposium, Paris, FRANCE, September 2015, pp.28-31. ***Best Paper Award Finalist***

415. T.Le, R.Bahr, M.M.Tentzeris, B.Song and C.P.Wong, "A Novel Chipless RFID-Based Stretchable and Wearable Hand Gesture Sensor", Proc. of the 2015 EuMW Symposium, September 2015, Paris, FRANCE, pp.371-374.

416. K.A.Nate, J.Hester, M.Isakov, R.Bahr and M.M.Tentzeris, "A Fully Printed Multilayer Aperture-Coupled Patch Antenna Using Hybrid 3D/Inkjet Additive

Manufacturing Techniques", Proc. of the 2015 EuMW Symposium, September 2015, Paris, FRANCE, pp.610-613.

417. R.Bahr, T.Le, M.M.Tentzeris, S.Moscato, M.Pasian, M.Bozzi and L.Perregrini, "RF Characterization of 3D Printed Flexible Materials - NinjaFlex Filaments", Proc. of the 2015 EuMW Symposium, Paris, FRANCE, September 2015, pp.742-745.

418. J.Hester, M.M.Tentzeris and Y.Fang, "Inkjet-Printed Flexible High-Performance Carbon Nanomaterial Based Sensors for Ammonia and DMMP Gas Detection", Proc. of the 2015 EuMW Symposium, September 2015, Paris, FRANCE, pp.857-860.

419. K.Nate and M.M.Tentzeris, "A Novel 3-D Printed Loop Antenna Using Flexible NinjaFlex Material for Wearable and IoT Applications", Proc. of the 2015 IEEE EPEPS Symposium, San Jose, CA, October 2015, pp.171-174.

420. W.Su, J.R.Cooper, B.S.Cook, M.M.Tentzeris, C.Mariotti and L.Roselli, "Inkjet-Printed Dual Microfluidic-Based Sensor Integrated Systems", Proc. of the 2015 IEEE Sensors Conference, Busan, KOREA, November 2015, pp.1-3.

421. W.Su, J.R.Cooper, B.S.Cook, M.M.Tentzeris, C.Mariotti and L.Roselli, "Inkjet-Printed Dual Microfluidic-Based Sensor Integrated Systems", Proc. of the 2015 IEEE Sensors Conference, Busan, KOREA, November 2015, pp.1-3.

422. T.Le, C.-C.Tuan, R.A.Bahr, C.P.Wong and M.M.Tentzeris, "A Novel Approach to Integrating 3D/4D Printing and Stretchable Conductive Adhesive Technologies for High-Frequency Packaging Applications", Proc. of the 2016 ECTC Symposium, Las Vegas, NV, May 2016, pp.1551-1556.

423. S.A.Nauroze, J.Hester, W.Su and M.M.Tentzeris, "Inkjet-Printed Substrate Integrated Waveguides (SIW) with "drill-less" Vias On Paper Substrates", Proc. of the2016 IMS Symposium, San Fransisco, AZ, May 2016, pp.1-4.

424. W.Su, Q.Liu, B.Cook and M.M.Tentzeris, "All-Inkjet-Printed Microfluidics-Based Encodable Flexible Chipless RFID Sensors", Proc. of the 2016 IMS Symposium, San Fransisco, AZ, May 2016, pp.1-4.

425. J.Bito, M.M.Tentzeris and A.Georgiadis, "A Hybrid Heuristic Design Technique for Real-Time Matching Optimization Of Wearable Near-Field Ambient RF Energy Harvesters", Proc. of the 2016 IMS Symposium, San Fransisco, AZ, May 2016, pp.1-4.

426. J.Kimionis and M.M.Tentzeris, "Pulse Shaping for Backscatter Radio", Proc. of the 2016 IMS Symposium, San Fransisco, AZ, May 2016, pp.1-4.

427. B.K.Tehrani, B.S.Cook and M.M.Tentzeris, "Inkjet-Printed 3D Interconnects for Millimeter-Wave System-on-Package Solutions", Proc. of the 2016 IMS Symposium, San Fransisco, AZ, May 2016, pp.1-4.

428. J.G.D.Hester and M.M.Tentzeris, "Inkjet-Printed Van-Atta Reflectarray Sensors: A New Paradigm for Long-Range Chipless Low Cost Ubiquitous Smart Skin Sensors of the Internet of Things", Proc. of the 2016 IMS Symposium, San Fransisco, AZ, May 2016, pp.1-4.

429. J.Kimionis and M.M.Tentzeris, "Software-Defined Reader for Multi-Modal RFID Sensing", Proc. of the 2016 IMS Symposium, San Fransisco, AZ, May 2016, pp.1-4.

430. M.M.Tentzeris, R.A.Bahr, A.D.Papadopoulos and E.N.Glytsis, "Multi-Domain Modeling of 3D Printed, Nanotechnology and Morphing/Origami-Based RF Modules", Proc. of the 2016 IMS Symposium, San Fransisco, AZ, May 2016, pp.1-4.

431. W.Su, R.Bahr, S.A.Nauroze and M.M.Tentzeris, "3D Printed Reconfigurable Helical Antenna Based on Microfluidics and Liquid Metal Alloy," Proc. of the 2016 IEEE APS/URSI Symposium, Fajardo, PR, July 2016, pp
432. J.Bito and M.M.Tentzeris, "Bias Circuit Design for a Real-Time Electrically Controlled Active Matching Circuit Utilizing p-i-n Diode Switches for Wireless Power Transfer," Proc. of the 2016 IEEE APS/URSI Symposium, Fajardo, PR, July 2016, pp.405-406.
433. B.K.Tehrani and M.M.Tentzeris, "Substrate-Independent System-on-Package Antenna Integration with Inkjet Printing," Proc. of the 2016 IEEE APS/URSI Symposium,Fajardo, PR, July 2016, pp.827-828.
434. J.G.D.Hester, M.M.Tentzeris and Y.Fang, "UHF Lumped Element Model of a Fully-Inkjet-Printed Single-Wall-Carbon-Nanotube Based Inter-Digitated Electrodes Breath Sensor,"Proc. of the 2016 IEEE APS/URSI Symposium, Fajardo, PR, July 2016, pp.1959-1960.
435. M.M.Tentzeris, "Invited Talk: Inkjet-/3D-/4D-Printed Paper/Polymer-Based "Green" mmW Modules: The Final Step to Bridge Cognitive Intelligence, Nanotechnology and RF for IoT and 5G Applications," Proc. of the 2016 International Conference on Smart Green Technologies in Electrical and Information Systems (ICSGTEIS), Bali, INDONESIA, October 2016, pp.1-4.
436. M.Bozzi, C.Tomassoni, L.Perregrini, R.Bahr and M.M.Tentzeris, "Additive Manufacturing of Substrate Integrated Waveguide Components," Proc. of the 2016 46th European Microwave Conference (EuMC), London, UK, October 2016, pp.253-256.
437. C.Tomassoni, R.Bahr, M.Tentzeris, M.Bozzi and L.Perregrini, "3D Printed Substrate Integrated Waveguide Filters with Locally Controlled Dielectric Permittivity," Proc. of the2016 IEEE MTT-S International Microwave Workshop Series on Advanced Materials and Processes for RF and THz Applications (IMWS-AMP), Chengdu, CHINA, October 2016, pp.
438. D.Revier and M.M.Tentzeris, "A Low-Cost, Single-Platform, Hybrid Manufacturing System for RF Passives", Proc. of the 2017 IEEE RWS Symposium, Phoenix, AZ, January 2017, pp.83-85.
439. S.I.H.Shah, S.Lim and M.M.Tentzeris, "Military Field Deployable Antennas Using Origami", Proc. of the 2017 International Workshop on Antenna Technology: Small Antennas, Innovative Structures, and Applications (iWAT), Athens?? March 2017, pp.72-73.
440. J.Bito, J.G.Hester and M.M.Tentzeris, "A Fully Autonomous Ultra-Low Power Hybrid RF/Photovoltaic Energy HarvestingSystem with -25dbm Sensitivity", Proc. of the 2017 IEEE Wireless Power Transfer Conference (WPTC), Taipei, TAIWAN, May 2017, pp.1-4.
441. J.Bito, V.Palazzi, J.Hester, R.Bahr, F.Alimenti, P.Mezzanotte, L.Roselli and M.M.Tentzeris, "Millimeter-Wave Inkjet-Printed RF Energy Harvester for Next Generation Flexible Electronics", Proc. of the 2017 IEEE Wireless Power Transfer Conference (WPTC), Taipei, TAIWAN, May 2017, pp.1-4.
442. S.Jeong, J.Bito and M.M.Tentzeris, "Design of a Novel Wireless Power Transfer System Using Machine Learning Techniques for Drone Applications", Proc. of the 2017 IEEE Wireless Power Transfer Conference (WPTC), Taipei, TAIWAN, May 2017, pp.1-4.
443. X.He, J.Bito and M.M.Tentzeris, "A Drone-Based Wireless Power Transfer and Communications Platform", Proc. of the 2017 IEEE Wireless Power Transfer Conference (WPTC), Taipei, TAIWAN, May 2017, pp.1-4.

444. A.O.Watanabe, M.Ali, B.Tehrani, J.Hester, H.Matsuura, T.Ogawa, P.M.Raj, V.Sundaram, M.M.Tentzeris and R.Tummala, "First Demonstration of 28 GHz and 39 GHz Transmission Lines and Antennas on Glass Substrates for 5G Modules", Proc. of the 2017 IEEE 67th ECTC Symposium, Orlando, FL, May 2017, pp.236-241.
445. R.Bahr, A.Nauroze, W.Su and M.M.Tentzeris, "Self-Actuating 3D Printed Packaging for Deployable Antennas", Proc. of the 2017 IEEE 67th ECTC Symposium, Orlando, FL, May 2017, pp.1425-1430.
446. W.Su, Z.Wu, Y.Fang, R.Bahr, P.M.Raj, R.Tummala and M.M.Tentzeris, "3D Printed Wearable Flexible SIW and Microfluidics Sensors for Internet of Things and Smart Health Applications", Proc. of the 2017 IEEE IMS Symposium, Honolulu, HI, June 2017, pp.544-547.
447. J.Kimionis, A.Georgiadis and M.M.Tentzeris, "Millimeter-Wave Backscatter: A Quantum Leap for Gigabit Communication, RF Sensing and Wearables", Proc. of the 2017 IEEE IMS Symposium, Honolulu, HI, June 2017, pp.812-815.
448. D.Henry, J.G.D.Hester, H.Aubert, P.Pons and M.M.Tentzeris, "Long Range Wireless Interrogation of Passive Humidity Sensors Using Van-Atta Cross Polarization Effect and 3D Beam Scanning Analysis", Proc. of the 2017 IEEE IMS Symposium, Honolulu, HI, June 2017, pp.816-819.
449. T.-H.Lin, J.Bito, J.G.Hester, J.Kimionis, R.A.Bahr and M.M.Tentzeris, "Ambient Energy Harvesting from Two-Way Talk Radio for On-Body Autonomous Wireless Sensing Networks Using Inkjet and 3D Printing", Proc. of the 2017 IEEE IMS Symposium, Honolulu, HI, June 2017, pp.1034-1037.
450. S.-N.Daskalakis, J.Kimionis, A.Collado, M.M.Tentzeris and A.Georgiadis, "Ambient FM Backscattering fro Smart Agricultural Monitoring", Proc. of the 2017 IEEE IMS Symposium, Honolulu, HI, June 2017, pp.1339-1341.
451. J.G.D.Hester and M.M.Tentzeris, "A mm-Wave Ultra-Long-Range Energy-Autonomous Printed RFID-Enabled Van-Atta Wireless Sensor: At the Crossroads of 5G and IoT", Proc. of the 2017 IEEE IMS Symposium, Honolulu, HI, June 2017, pp.1557-1560. Best Student Paper Award Honorable Mention
452. S.A.Nauroze, L.Novelino, M.M.Tentzeris and Glaucio H. Paulino, "Inkjet-Printed "4D" Tunable Spatial Filters Using On-Demand Foldable Surfaces", Proc. of the 2017 IEEE IMS Symposium, Honolulu, HI, June 2017, pp.1575-1578.
453. W.Su, S.A.Nauroze, R.Bahr and M.M.Tentzeris, "Novel 3D Printed Liquid-Metal-Alloy Microfluidics-Based Zigzag and Helical Antennas for Origami Reconfigurable Antenna "Trees" ", Proc. of the 2017 IEEE IMS Symposium, Honolulu, HI, June 2017, pp.1579-1582.
454. R.A.Bahr, Y.Fang, W.Su, B.Tehrani, V.Palazzi and M.M.Tentzeris, "Novel Uniquely 3D Printed Intricate Voronoi and Fractal 3D Antennas", Proc. of the 2017 IEEE IMS Symposium, Honolulu, HI, June 2017, pp.1583-1586.
455. B.K.Tehrani, R.A.Bahr, W.Su, B.S.Cook and M.M.Tentzeris, "E-Band Characterization of 3D-Printed Dielectrics for Fully-Printed Millimeter-Wave Wireless System Packaging",Proc. of the 2017 IEEE IMS Symposium, Honolulu, HI, June 2017, pp.1756-1759.
456. T.-H.Lin, P.M.Raj, A.Watanabe, V.Sundaram, R.Tummala and M.M.Tentzeris, "Nanostructured Miniaturized Artificial Magnetic Conductors (AMC) for High-Performance Antennas in 5G, IoT and Smart Skin

Applications", Proc. of the 2017 IEEE 17th International Conference on Nanotechnology (IEEE-Nano), Pittsburgh, PA, July 2017, pp.911-915.

457. B.K.Tehrani, S.A.Nauroze, R.A.Bahr and M.M.Tentzeris, "On-Package mm-Wave FSS Integration with 3D-Printed Encapsulation", Proc. of the 2017 IEEE APS/URSI Symposium, San Diego, CA, July 2017, pp.9-10.

458. W.Su, R.Bahr, S.A.Nauroze and M.M.Tentzeris, "Novel 3D-Printed "Chinese Fan" Bow-Tie Antennas for Origami/Shape-Changing Configurations", Proc. of the 2017 IEEE APS/URSI Symposium, San Diego, CA, July 2017, pp.1245-1246.

459. J.Iwata, J.Bito and M.M.Tentzeris, "A Wideband and High Gain Antenna on Multilayer Insulation Blanket for RF Energy Harvesting", Proc. of the 2017 IEEE APS/URSI Symposium, San Diego, CA, July 2017, pp.1603-1604.

460. T.-H.Lin, J.Bito and M.M.Tentzeris, "Wearable Inkjet Printed Energy Harvester", Proc. of the 2017 IEEE APS/URSI Symposium, San Diego, CA, July 2017, pp.1613-1614.

461. H.Griguer, M.M.Tentzeris, A.Nauroze and M.Drissi, "A Novel Ultra-Thin Flexible Metamaterial Absorber]for Human Body Protection from EMF Hazards", Proc. of the 2017 XXXIInd General Assembly and Scientific Symposium of the International Union of Radio Science (URSI GASS), Montreal, CANADA, August 2017, pp.1-4.

462. S.Daskalakis, J.Kimionis, J.Hester, A.Collado, M.M.Tentzeris and A.Georgiadis, "Inkjet printed 24 GHz rectenna on paper for millimeter wave identification and wireless power transfer applications", Proc. of the 2017 IEEE MTT-S International Microwave Workshop Series on Advanced Materials and Processes for RF and THz Applications (IMWS-AMP), Pavia, ITALY, September 2017, pp.1-3.

463. V.Palazzi, R.Bahr, B.Tehrani, J.Hester, J.Bito, F.Alimenti, P.Mezzanotte, L.Roselli and M.M.Tentzeris, "A Novel Additive-Manufactured Multiple-Infill Ultra-Lightweight Cavity-Backed Slot Antenna for UWB Applications", Proc. of the 2017 47th European Microwave Conference (EuMC), Nurnberg, GERMANY, October 2017, pp.252-255.

464. S.N.Daskalakis, A.Georgiadis, A.Collado and M.M.Tentzeris, "An UHF Rectifier with 100% Bandwidth Based on a Ladder LC Impedance Matching Network", Proc. of the 2017 12th European Microwave Integrated Circuits Conference (EuMIC)/2017 47th European Microwave Conference (EuMC), Nurnberg, GERMANY, October 2017, pp.411-414/1151-1154.

465. S.N.Daskalakis, A.Collado, A.Georgiadis and M.M.Tentzeris, "Backscatter Morse Leaf Sensor for Agricultural Wireless Sensor Networks", Proc. of the 2017 IEEE Sensors Symposium, Glasgow, Scotland, UK, October 2017, pp.1-3.

466. A.Georgiadis, J.Kimionis and M.M.Tentzeris, "3D/Inkjet-Printed Millimeter Wave Components and Interconnects for Communication and Sensing", Proc. of the 2017 IEEE Compound Semiconductor Integrated Circuit Symposium (CSICS), Miami, FL, October 2017, pp.1-4.

467. J.G.D.Hester, J.Kimionis, R.Bahr, W.Su, B.Tehrani and M.M.Tentzeris, "Radar & Additive Manufacturing Technologies: The Future of Internet of Things (IoT)", Proc. of the 2018 IEEE Radar Conference, Oklahoma City, OK, April 2018, pp.447-452.

468. A.O.Watanabe, T.-H.Lin, T.Ogawa, P.M.Raj, V.Sundaram, M.M.Tentzeris and R.Tummala, "Design and Demonstration of Ultra-Thin 3D Glass-Based 5G Modules with Low-Loss Interconnects", Proc. of the 2018 International Conference on Electronics Packaging and iMAPS All Asia Conference (ICEP-

IAAC), Mie, JAPAN, April 2018, pp.180-183. **IEEE CPMT Japan Chapter Young Award**

469. B.Song, F.Wu, K.-S.Moon, R.Bahr, M.M.Tentzeris and C.P.Wong, "Stretchable, Printable and Electrically Conductive Composites for Wearable RF Antennas", Proc. of the **2018 IEEE ECTC Conference,** San Diego, CA, May 2018, pp.9-14.
470. B.Tehrani, R.Bahr, D.Revier, B.Cook and M.M.Tentzeris, "The Principles of "Smart" Encapsulation: Using Additive Printing Technology for the Realization of Intelligent Application-Specific Packages for IoT, 5G and Automotive Radar Applications", Proc. of the **2018 IEEE ECTC Conference,** San Diego, CA, May 2018, pp.111-117.
471. T.-H.Lin, R.Bahr, M.M.Tentzeris, P.M.Raj, V.Sundaram and R.Tummala, "Novel 3D-/Inkjet-Printed Flexible On-Package Antennas, Packaging Structures, and Modules for Broadband 5G Applications", Proc. of the **2018 IEEE ECTC Conference,** San Diego, CA, May 2018, pp.214-220.
472. C.L.Taylor, X.He, V.Smet, M.M.Tentzeris and S.Sitaraman, "Low-Temperature Assembly of Surface-Mount Device on Flexible Substrate Using Additive Printing Process", Proc. of the **2018 IEEE ECTC Conference,** San Diego, CA, May 2018, pp.379-385.
473. M.Ali, F.Liu, A.Watanabe, P.M.Raj, V.Sundaram, M.M.Tentzeris and R.R.Tummala, "Miniaturized High-Performance Filters for 5G Small-Cell Applications", Proc. of the **2018 IEEE ECTC Conference,** San Diego, CA, May 2018, pp.1068-1075. **Intel Best Student Paper Award**
474. R.Bahr, B.Tehrani, M.M.Tentzeris and K.Byers, "A Novel Integration of Stereolithography and Inkjet Printing for Multichip Modules with High Frequency Packaging Applications", Proc. of the **2018 IEEE ECTC Conference,** San Diego, CA, May 2018, pp.2498-2504.
475. A.Watanabe, T.-H.Lin, P.M.Raj, V.Sundaram, M.M.Tentzeris, R.R.Tummala and T.Ogawa, "Leading-Edge and Ultra-Thin 3D Glass-Polymer 5G Modules with Seamless Antenna-to-Transceiver Signal Transmissions", Proc. of the **2018 IEEE ECTC Conference,** San Diego, CA, May 2018, pp.2026-2031.
476. S.A.Nauroze, A.Eid and M.M.Tentzeris, "n-RiM: A Paradigm Shift in the Realization of Fully Inkjet-Printed Broadband Tunable FSS Using Origami Structures", Proc. of the **2018 IEEE IMS Symposium,** Philadelphia, PA, June 2018, pp.51-54.
477. W.Su, S.Wang, R.Bahr and M.M.Tentzeris, "Smart Floating Balls: 3D Printed Spherical Antennas and Sensors for Water Quality Monitoring", Proc. of the **2018 IEEE IMS Symposium,** Philadelphia, PA, June 2018, pp.55-58.
478. J.Kimionis, S.Shahramian, Y.Bayens, A.Singh and M.M.Tentzeris, "Pushing Inkjet Printing to W-Band: An All-Printed 90-GHz Beamforming Array", Proc. of the **2018 IEEE IMS Symposium,** Philadelphia, PA, June 2018, pp.63-66.
479. S.N.Daskalakis, R.Correia, G.Goussetis, M.M.Tentzeris, N.B.Carvalho and A.Georgiadis, "Spectrally Efficient 4-PAM Ambient FM Backscattering for Wireless Sensing and RFID Applications", Proc. of the **2018 IEEE IMS Symposium,** Philadelphia, PA, June 2018, pp.266-269.
480. T.-H.Lin, W.Su and M.M.Tentzeris, "Expand Horizons of Microfluidic Systems: An Inkjet Printed Flexible Energy Autonomous Micropump System for Wearable and IoT Microfluidic Applications", Proc. of the **2018 IEEE IMS Symposium,** Philadelphia, PA, June 2018, pp.812-815.

481. R.Bahr, X.He, B.Tehrani and M.M.Tentzeris, "A Fully 3D Printed Multi-Chip Module with an On-Package Enhanced Dielectric Lens for mm-Wave Applications Using Multimaterial Stereolithography", Proc. of the **2018 IEEE IMS Symposium,** Philadelphia, PA, June 2018, pp.1561-1564.
482. S.A.Nauroze, B.Tehrani and M.M.Tentzeris, "An Inkjet-Printed Origami-based Frequency Selective Surface with Wide Frequency and Bandwidth Tunability", Proc. of the **2018 IEEE APS Symposium,** Boston, MA, July 2018, pp.1677-1678.
483. A.Eid, J.Hester, A.Nauroze, T.-H.Lin. C.J.Costantine, Y.Tawk, A.H.Ramadan and M.M.Tentzeris, "A Flexible Compact Rectenna for 2.4GHz ISM Energy Harvesting Applications", Proc. of the **2018 IEEE APS Symposium,** Boston, MA, July 2018, pp.1887-1888.
484. S.B.Fan, T.H.Chang, X.Y.Liu, Y.Fan and M.M.Tentzeris, "A Depolarizing Chipless RFID Tag with Humidity Sensing Capability", Proc. of the **2018 IEEE APS Symposium,** Boston, MA, July 2018, pp.2469-2470.
485. H.X.Zhu, Y.Fan, X.Y.Liu and M.M.Tentzeris, "A Compact Low-Profile Dual-Band Patch Filtering Antenna for Off-Body Communications", Proc. of the **2018 ACES Symposium,** Beijing, CHINA, July 2018, pp.
486. B.K.Tehrani and M.M.Tentzeris, "Fully Inkjet-Printed Ramp Interconnects for Wireless Ka-Band MMIC Devices and Multi-Chip Module Packaging", Proc. of the **2018 EuMW Conference,** Madrid, SPAIN, September 2018, pp.1037-1040.
487. A.Eid, B.Tehrani, J.Hester, X.He and M.M.Tentzeris, "Nanotechnology-Enabled Additively-Manufactured RF and Millimeter-Wave Electronics", Proc. of the **2018 IEEE Nanotechnology Materials and Devices Conference (NMDC),** Portland, OR, October 2018, pp. **Best Paper Nominee**
488. S.Ghosh, M.M.Tentzeris and S.Lim, "Lightweight 3D Printed Metamaterial for Electromagnetic Wave Absorption", Proc. of the **2018 ISAP Symposium,** Busan, KOREA, October 2018, pp.
489. S.Ghosh, R.Phon, M.M.Tentzeris and S.Lim, "An Improved Multifunctional Frequency Selective Surface Based on Microfluidic Technology", Proc. of the **2018 ISAP Symposium,** Busan, KOREA, October 2018, pp.
490. S.I.H.Shah, S.Gosh, M.M.Tentzeris and S.Lim, "A Novel Bio Inspired Pattern Reconfigurable Quasi-Yagi Helical Antenna Using Origami DNA", Proc. of the **2018 ISAP Symposium,** Busan, KOREA, October 2018, pp.
491. Y.Cui, W.Su and M.M.Tentzeris, "Fully Inkjet-Printed Tunable Flexible Microfluidic Chipless RFID Sensor", Proc. of the **2019 ACES Symposium,** Miami, FL, April 2019, pp.
492. Z.Zhai, Y.Fan, X.Liu and M.M.Tentzeris, "A Frequency Tunable Wideband Circularly Polarized Antenna", Proc. of the **2019 IEEE International Conference on Microwave and Millimeter Wave Technology (ICMMT),** Guangzhou, CHINA, May 2019, pp.
493. P.Sun, T.Chang, Y.Fan, X.Liu and M.M.Tentzeris, "Chipless RFID Sensor Tag for Angular Velocity and Displacement Measurement", Proc. of the **2019 IEEE International Wireless Symposium (IWS),** Guangzhou, CHINA, May 2019, pp.
494. H.Yang, Y.Fan, X.Y.Liu and M.M.Tentzeris, "Single-Fed Dual-Band Circularly Polarized Patch Antenna with Wide 3-dB Axial Ratio Beamwidth for CNSS Applications", Proc. of the **2019 IEEE International Wireless Symposium (IWS),** Guangzhou, CHINA, May 2019, pp.
495. M.Ali, A.Watanabe, T.-H.Lin, M.R.Pulugurtha, M.M.Tentzeris and R.R.Tummala, "3D Glass Package-Integrated High-Performance Power Dividing

Networks for 5G Broadband Antennas", Proc. of the **2019 IEEE ECTC Conference,** Las Vegas, NV, May 2019, pp.960-967.

496. A.O.Watanabe, Y.Wang, N.Ogura, P.M.Raj, V.Smet, M.M.Tentzeris and R.Tummala, "Low-Loss Additively Deposited Ultra-Short Copper-Paste Interconnections in 3D Antenna-Integrated Packages for 5G and IoT Applications", Proc. of the **2019 IEEE ECTC Conference,** Las Vegas, NV, May 2019, pp.972-976.
497. A.Eid, J.Hester and M.M.Tentzeris, "A Scalable High-Gain and Large-Beamwidth mm-Wave Harvesting Approach for 5G-Powered IoT", Proc. of the **2019 IEEE IMS Symposium,** Boston, MA, June 2019, pp.1309-1312. **Best Student Paper Honorable Mention**
498. S.A.Nauroze and M.M.Tentzeris, "Fully Inkjet-Printed Multi-layer Tunable Origami FSS Structures with Integrated Thermal Actuation Mechanism", Proc. of the **2019 IEEE IMS Symposium,** Boston, MA, June 2019, pp.1363-1366. **Best Student Paper Honorable Mention**
499. Y.Cui, S.A.Nauroze and M.M.Tentzeris, "Novel 3D-Printed Reconfigurable Origami Frequency Selective Surfaces with Flexible Inkjet-Printed Conductor Traces", Proc. of the **2019 IEEE IMS Symposium,** Boston, MA, June 2019, pp.1367-1370.
500. V.Palazzi, P.Mezzanotte, F.Alimenti, M.M.Tentzeris and L.Roselli, "Microfluidics-based 3D-Printed 4x4 Butler Matrix in Coaxial Technology for Applications up to K-Band", Proc. of the **2019 IEEE IMS Symposium,** Boston, MA, June 2019, pp.1371-1374.
501. T.-H.Lin, S.N.Daskalakis, A.Georgiadis and M.M.Tentzeris, "Achieving Fully Autonomous System-on-Package Designs: An Embedded-on-Package 5G Energy Harvester within 3D Printed Multilayer Flexible Packaging Structures", Proc. of the **2019 IEEE IMS Symposium,** Boston, MA, June 2019, pp.1375-1378.
502. S.Jeong, T.-H.Lin and M.M.Tentzeris, "Range-Adaptive Impedance Matching of Wireless Power Transfer Systems Using a Machine Learning Strategy Based on Neural Networks", Proc. of the **2019 IEEE IMS Symposium,** Boston, MA, June 2019, pp.1423-1425.
503. Y.Guan, S.Wang, M.M.Tentzeris and Y.Liu, "A Microfluidic Spherical Helix Module Using Liquid Metal and Additive Manufacturing for Drug Delivery Applications", Proc. of the **2019 IEEE IMS Symposium,** Boston, MA, June 2019, pp.1446-1449.
504. X.He and M.M.Tentzeris, "Inkjet Printed Lange Coupler for Antenna Systems", Proc. of the **2019 IEEE APS Symposium,** Atlanta, GA, July 2019, pp.91-92.
505. Y.Cui, W.Su and M.M.Tentzeris, "A Novel 3D and Inkjet Printed Pressure-sensing Button-shaped Resonator", Proc. of the **2019 IEEE APS Symposium,** Atlanta, GA, July 2019, pp.591-592.
506. S.Wang, M.Tong, Y.Guan and M.M.Tentzeris, "3D Printed Inverted-F Antenna and Temperature Sensor Using Microfluidics Technologies", Proc. of the **2019 IEEE APS Symposium,** Atlanta, GA, July 2019, pp.599-600.
507. S.N.Daskalakis, S.D.Assimonis, G.Goussetis, M.M.Tentzeris and A.Georgiadis, "The Future of Backscatter in Precision Agriculture", Proc. of the **2019 IEEE APS Symposium,** Atlanta, GA, July 2019, pp.647-648.
508. M.Ali, A.Watanabe, T.-H.Lin, M.Tentzeris, R.Tummala and P.M.Raj, "Ultra-Wideband Glass Package-Integrated Power Dividers for 5G and

mm-Wave Applications", Proc. of the **2019 IEEE APS Symposium,** Atlanta, GA, July 2019, pp.863-864.

509. S.D.Assimonis, S.N.Daskalakis, V.Fusco, M.M.Tentzeris and A.Georgiadis, "High Efficiency RF Energy Harvester for IoT Embedded Sensor Nodes", Proc. of the **2019 IEEE APS Symposium,** Atlanta, GA, July 2019, pp.1161-1162.

510. A.Eid, J.Hester, B.Tehrani and M.Tentzeris, "Flexible W-Band Rectifiers for 5G-Powered IoT Autonomous Modules", Proc. of the **2019 IEEE APS Symposium,** Atlanta, GA, July 2019, pp.1163-1164.

511. A.Eid, J.Hester and M.M.Tentzeris, "A Scalable High-Gain and Large-Beamwidth mm-Wave Harvesting Approach for 5G-powered IoT", Proc. of the **2019 IEEE APS Symposium,** Atlanta, GA, July 2019, pp.1309-1312.

512. T.-H.Lin and M.M.Tentzeris, "Printed 5G Reconfigurable Wireless Modules Using Additive Manufacturing Techniques", Proc. of the **2019 IEEE APS Symposium,** Atlanta, GA, July 2019, pp.1705-1706.

513. A.O.Adeyeye, R.A.Bahr and M.M.Tentzeris, "3D Printed 2.45GHz Yagi-Uda Loop Antenna Utilizing Microfluidic Channels and Liquid Metal", Proc. of the **2019 IEEE APS Symposium,** Atlanta, GA, July 2019, pp.1983-1984.

514. S.A.Nauroze and M.M.Tentzeris, "Fully Inkjet-Printed Tunable Hybrid n-Ripple Miura (n-RiM) Frequency Selective Surfaces", Proc. of the **2019 IEEE APS Symposium,** Atlanta, GA, July 2019, pp.2019-2020.

515. S.Daskalakis, A.Georgiadis, G.Goussetis and M.M.Tentzeris, "Low Cost Ambient Backscatter for Agricultural Applications", Proc. of the **2019 ICEAA-IEEE APS Topical Conference on Antennas and Propagation in Wireless Communications (APWC) Symposium,** Granada, SPAIN, September 2019, pp.201.

516. A.O.Adeyeye, J.Hester and M.M.Tentzeris, "Miniaturized Millimeter Wave RFID Tag for Spatial Identification and Localization in Internet of Things Applications", Proc. of the **2019 European Microwave Week,** Paris, FRANCE, October 2019, pp.105-108.

517. S.A.Alotaibi, Y.Cui and M.M.Tentzeris, "Ultrasensitive Planar Metamaterials for Material Characterization Using Tapered CSRR with Application to NDT of 3D Printed Structures", Proc. of the **2019 European Microwave Week,** Paris, FRANCE, October 2019, pp.508-511.

518. E.Antonino-Daviu, A.Eid, R.Bahr and M.M.Tentzeris, "Flexible Antenna Design with Characteristic Modes", Proc. of the 2020 14th European Conference on Antennas and Propagation (EuCAP), Copenhagen, DENMARK, March 2020, pp.1-4, doi: 10.23919/EuCAP48036.2020.9135608

519. A.Eid, J.Hester and M.M.Tentzeris, "A 5.8GHz Fully-Tunnel-Diodes-Based 20uW, 88mV and 48dB-Gain Fully-Passive Backscattering RFID Tag", Proc. of the 2020 IEEE International Microwave Symposium (IMS), Virtual/Los Angeles, CA, June 2020, pp.607-610, doi: 10.1109/IMS30576.2020.9224116.

520. X.He, Y.Fang, R.A.Bahr and M.M.Tentzeris, "RF Systems on Antenna (SoA): a Novel Integration Approach Enabled by Additive Manufacturing", Proc. of the 2020 IEEE International Microwave Symposium (IMS), Virtual/Los Angeles, CA, June 2020, pp.1157-1160, doi: 10.1109/IMS30576.2020.9223793.

521. Y.Cui, S.A.Nauroze, R.Bahr and M.M.Tentzeris, "3D Printed One-Shot Deployable Flexible "Kirigami" Dielectric Reflectarray Antenna for mm-Wave Applications", Proc. of the 2020 IEEE International Microwave Symposium (IMS), Virtual/Los Angeles, CA, June 2020, pp.1164-1167, doi: 10.1109/IMS30576.2020.9224010.

522. A. Eid, J. Hester and M. Tentzeris, "mm-Wave Tunnel Diode-Based Rectifier for Perpetual IoT", Proc. of the 2020 IEEE International Symposium on Antennas and Propagation and North American Radio Science Meeting, Montreal, QC, Canada/Virtual, July 2020, pp. 1495-1496, doi: 10.1109/IEEECONF35879.2020.9329745
523. X. He and M. M. Tentzeris, "A 3D Printed Dish Antenna With Integrated Feeding Structure", Proc. of the 2020 IEEE International Symposium on Antennas and Propagation and North American Radio Science Meeting, Montreal, QC, Canada/Virtual, July 2020, pp. 1603-1604, doi: 10.1109/IEEECONF35879.2020.9329541
524. Y. Cui, A. Eid and M. M. Tentzeris, "A 3D-Printed mm-Wave Deployable Origami Dielectric Reflectarray Antenna", Proc. of the 2020 IEEE International Symposium on Antennas and Propagation and North American Radio Science Meeting, Montreal, QC, Canada/Virtual, July 2020, pp. 1679-1680, doi: 10.1109/IEEECONF35879.2020.9330219.
525. F. Asadallah, G. Shehadeh, J. Costantine, Y. Tawk, A. Eid and M. M. Tentzeris, "A Digitally Tuned Flexible Reconfigurable Antenna for IoT Devices", Proc. of the 2020 IEEE International Symposium on Antennas and Propagation and North American Radio Science Meeting, Montreal, QC, Canada/Virtual, July 2020, pp. 1803-1804, doi: 10.1109/IEEECONF35879.2020.9329456
526. R.A.Bahr, A.O.Adeyeye, S.Van Rijs and M.M.Tentzeris, "3D-Printed Omnidirectional Luneburg Lens Retroreflectors for Low-Cost mm-Wave Positioning", Proc. of the 2020 IEEE International Conference on RFID, Orlando, FL/Virtual, October 2020, pp. 1-7, doi: 10.1109/RFID49298.2020.9244891
527. M.Ote, S.Jeong and M.M.Tentzeris, "Foreign Object Detection for Wireless Power Transfer Based on Machine Learning", Proc. of the 2020 IEEE Wireless Power Transfer Conference (WPTC), Seoul, KOREA, November 2020, pp.476-479, doi: 10.1109/WPTC48563.2020.9295641.
528. Y.Cui, S.Van Rijs, R.Bahr and M.M.Tentzeris, "A Novel Fully Inkjet Printed Dual-Polarization Broadband Tuneable FSS Using Origami "Eggbox" Structure", Proc. of the 2020 50th European Microwave Conference (EuMC), Virtual/Utrecht, NETHERLANDS, January 2021, pp.760-763, doi: 10.23919/EuMC48046.2021.9338121.
529. A.Papathanasopoulos, Y.Rahmat-Samii, R.Bahr, Y.Cui and M.M.Tentzeris, "Introducing Inkjet Printing Technology to the Fabrication of Flat-Layered Meta-Lens Antennas", Proc. of the 2021 USNC-URSI NRSM Symposium, Boulder, CO, January 2021, pp.49-50, doi: 10.23919/USNC-URSINRSM51531.2021.9336472.
530. C.A.Lynch, A.O.Adeyeye, J.G.D.Hester and M.M.Tentzeris, "When a Single Chip becomes the RFID Reader: An Ultra-low-cost 60 GHz Reader and mmID System for Ultra-accurate 2D Microlocalization", Proc. of the 2021 IEEE International Conference on RFID (RFID), Atlanta, GA/VIRTUAL, April 2021, pp. 1-8, doi: 10.1109/RFID52461.2021.9444319.
531. A.Adeyeye, C.Lynch, X.He, S.Lee, J.D.Cressler and M.M.Tentzeris, "Fully Inkjet Printed 60 GHz Backscatter 5G RFID Modules for Sensing and Localization in Internet of Things and Digital Twins Applications", Proc. of the 2021 IEEE 71st Electronic Components and Technology Conference (ECTC), San Diego/VIRTUAL, CA, USA, 2021, pp. 1193-1198, doi: 10.1109/ECTC32696.2021.00195.
532. C.A.Lynch, A.Eid, Y.Fang and M.M.Tentzeris, "Inkjet-/3D-/4D-Printed "Zero-Power" Flexible Wearable Wireless Modules for Smart Biomonitoring and

Pathogen Sensing", Proc. of the 2021 IEEE International Conference on Flexible and Printable Sensors and Systems (FLEPS), Manchester, UK, June 2021, pp. 1-3, doi: 10.1109/FLEPS51544.2021.9469832

533. V.Palazzi, P.Mezzanotte, F.Alimenti, M.Tentzeris and L.Roselli, "Ultra-Low-Cost Passive 3D-Printed Vibration Transducers for Condition Monitoring by means of Wireless Chipless Transponders", Proc. of the 2021 International Microwave Symposium (IMS), Atlanta, GA, June 2021, pp.82-85, doi: 10.1109/IMS19712.2021.9574876.

534. Y.Cui, S.A.Nauroze, R.Bahr and M.M. Tentzeris, "A Novel Additively 4D Printed Origami-inspired Tunable Multi-layer Frequency Selective Surface for mm-Wave IoT, RFID, WSN, 5G, and Smart City Applications", Proc. of the 2021 International Microwave Symposium (IMS), Atlanta, GA, June 2021, pp.86-89, doi: 10.1109/IMS19712.2021.9574806.

535. X.He and M.M.Tentzeris, "In-Package Additively Manufactured Sensors for Bend Prediction and Calibration of Flexible Phased Arrays and Flexible Hybrid Electronics", Proc. of the 2021 International Microwave Symposium (IMS), Atlanta, GA, June 2021, pp.327-330, doi: 10.1109/IMS19712.2021.9574896.

536. S.Jeong, J.Hester, R.Bahr and M.M.Tentzeris, "A Machine Learning Approach-based Chipless RFID System for Robust Detection in Real-world Implementations", Proc. of the 2021 International Microwave Symposium (IMS), Atlanta, GA, June 2021, pp.661-664, doi: 10.1109/IMS19712.2021.9574849.

537. A.D.Boursianis, M.Salucci, S.Koulouridis, A.Georgiadis, M.Tentzeris and S.K.Goudos, "Dual-Band Frequency Selective Surface Design Using Harris Hawks Optimization", Proc. of the 2021 10th International Conference on Modern Circuits and Systems Technologies (MOCAST), Thessaloniki, GREECE, July 2021, pp. 1-4, doi: 10.1109/MOCAST52088.2021.9493382

538. C.A.Lynch, A.O.Adeyeye, A.Eid, J.G.D.Hester and M.M.Tentzeris, "5G/mm-Wave Next Generation RFID Systems for Future IoT Applications", Proc. of the 2021 IEEE International Conference on RFID Technology and Applications (RFID-TA), Delhi, INDIA, October 2021, pp.77-80, doi: 10.1109/RFID-TA53372.2021.9617406.

539. G.D.Durgin, M.A.Varner, M.A.Weitnauer, J.Cressler, M.M.Tentzeris, A.Zajic, S.Zeinolabedinzadeh, R.Zekavat, K.Pahlavan, U.Guler and K.Van der Merwe, "Digital Spectrum Twinning and the Role of RFID and Backscatter Communications in Spectral Sensing", Proc. of the 2021 IEEE International Conference on RFID Technology and Applications (RFID-TA), Delhi, INDIA, October 2021, pp.89-92, doi: 10.1109/RFID-TA53372.2021.9617314.

540. A.Eid, J.G.D.Hester and M.M.Tentzeris, "Solving the Gain/Coverage Problem to enable 5G-Powered IoT", Procs. of the 2021 Antenna Measurement Techniques Association Symposium (AMTA), Daytona Beach, FL, October 2021, pp. 1-5, doi: 10.23919/AMTA52830.2021.9620574.

541. K. Hu and M. M. Tentzeris, "Advanced Development in Packaging of Antenna-integrated Systems for Millimeter-wave Applications," 2021 IEEE MTT-S International Microwave and RF Conference (IMARC), KANPUR, India, December 2021, pp. 1-4, doi: 10.1109/IMaRC49196.2021.9714588.

542. K.Hu, X.He and M.M.Tentzeris, "Flexible and Scalable Additively Manufactured Antenna Array Tiles for Satellite and 5G Applications Using a Novel Rugged Microstrip-to-Microstrip Transition", Procs. IEEE 2021 Antennas and Propagation Symposium, SINGAPORE, December 2021, pp.37-38, doi: 10.1109/APS/URSI47566.2021.9704748.

543. A.O.Adeyeye, C.A.Lynch, M.M.Tentzeris and J.Hester, “24GHz RFID for Orientation Detection and Tracking Applications in Human Activity Recognition and Motion Capture”, Procs. IEEE 2021 Antennas and Propagation Symposium, SINGAPORE, December 2021, pp.171-172.
544. M.Holda, Y.Cui, A.Nauroze, M.Tentzeris and P.Dahmen, “Pop-Up Card Inspired 3D-Printed Corner Reflector Antenna – A Novel Deployable Antenna”, Procs. IEEE 2021 Antennas and Propagation Symposium, SINGAPORE, December 2021, pp.751-752, doi: 10.1109/APS/URSI47566.2021.9703940.
545. A.Eid, M.M.Tentzeris, J.Zhu, L.Xu and J.Hester, “UHF Tags Array for Holographic Target Localization and Wireless Health Monitoring”, Procs. IEEE 2021 Antennas and Propagation Symposium, SINGAPORE, December 2021, pp.1037-1038, doi: 10.1109/APS/URSI47566.2021.9703960. ***[Best Student Paper Award]***
546. A.Alreshaid, Y.Cui, R.Bahr, M.M.Tentzeris and M.S.Sharawi, “A Millimeter Wave Tri-Polarized Patch Antenna with a Bandwidth-Enhancing Parasitic Element”, Procs. IEEE 2021 Antennas and Propagation Symposium, SINGAPORE, December 2021, pp.1051-1052, doi: 10.1109/APS/URSI47566.2021.9704418.
547. A.Eid, J.Hester and M.M.Tentzeris, “Optimizing Rotman Lens Topologies for 5G Wireless Grids”, Procs. IEEE 2021 Antennas and Propagation Symposium, SINGAPORE, December 2021, pp.1061-1062, doi: 10.1109/APS/URSI47566.2021.9704612.
548. C.A.Lynch, A.O.Adeyeye, B.Tehrani and M.M.Tentzeris, “Flexible Passive Smart Skin Temperature Sensor for Remote Sensing in Structural Health Monitoring Applications”, Procs. IEEE 2021 Antennas and Propagation Symposium, SINGAPORE, December 2021, pp.1123-1124, doi: 10.1109/APS/URSI47566.2021.9704071.
549. A.Eid, J.Hester and M.M.Tentzeris, “Extending the Range of 5G Energy Transfer: Towards the Wireless Power Grid”, Procs. 2022 16th European Conference on Antennas and Propagation (EuCAP), Madrid, SPAIN, March 2022, pp. 1-4, doi: 10.23919/EuCAP53622.2022.9769572.
550. M. Chan, A.Goodnight, A.Koul, E.Ohm, C.Wang and M.M.Tentzeris, "Characterization of a 60GHz Reader and mmID System for High Fidelity Real-time Tracking With On-chip Processing," 2022 Opportunity Research Scholars Symposium (ORSS), Atlanta, GA, USA, 2022, April 2022, pp. 16-19, doi: 10.1109/ORSS55359.2022.9806033.
551. C.A.Lynch, A.O.Adeyeye and M.M.Tentzeris, “ “Smart” Packaging of Self-Identifying and Localizable mmID for Digital Twinning and Metaverse Temperature Sensing Applications”, Procs. of the 2022 IEEE 72nd Electronic Components and Technology Conference (ECTC), San Diego, CA, May 2022, pp.87-92, doi: 10.1109/ECTC51906.2022.00023.
552. Y.Zhou, K.Hu, M.M.Tentzeris and S.K.Sitaraman, “Mechanical and Ka-Band Electrical Reliability Testing of Interconnects in 5G Wearable System-on-Package Designs Under Bending”, Procs. of the 2022 IEEE 72nd Electronic Components and Technology Conference (ECTC), San Diego, CA, May 2022, pp.914-923, doi: 10.1109/ECTC51906.2022.00149.
553. S.D.Assimonis, V.Fusco and M.M.Tentzeris, “Efficient Circular Polarized Metamaterial RF Energy Harvester for Wi-Fi Applications”, Procs.2022 International Workshop on Antenna Technology (iWAT), Dublin, IRELAND, May 2022, pp.150-152, doi: 10.1109/iWAT54881.2022.9811061.

554. C.A.Lynch III, A.Adeyeye, A.Eid, J.Hester and M.M.Tentzeris, “Ultra-Long-Range Dual Rotman Lenses-Based Harmonic mmID’s for 5G/mm-Wave IoT Applications”, Procs. of the 2022 IEEE International Microwave Symposium (IMS), Denver, CO, June 2022, pp. 32-35, doi: 10.1109/IMS37962.2022.9865357.
555. A.Adeyeye, C.Lynch, J.Hester and M.M.Tentzeris, “A Machine Learning Enabled mmWave RFID for Rotational Sensing in Human Gesture Recognition and Motion Capture Applications”, Procs. of the 2022 IEEE International Microwave Symposium (IMS), Denver, CO, June 2022, pp. 137-140, doi: 10.1109/IMS37962.2022.9865432.
556. K.Hu, G.Soto-Valle, Y.Cui and M.M.Tentzeris, “Flexible and Scalable Additively Manufactured Tile-Based Phased Arrays for Satellite Communication and 5G mmWave Applications”, Procs. of the 2022 IEEE International Microwave Symposium (IMS), Denver, CO, June 2022, pp. 691-694, doi: 10.1109/IMS37962.2022.9865337.
557. R.Salvati, V.Palazzi, G.Cicioni, G.Simoncini, F.Alimenti, M.M.Tentzeris, P.Mezzanotte and L.Roselli, "Zero-Power Wireless Pressure Sensor based on Backscatter Harmonic Transponder in a WPT context", Proc. of the 2022 IEEE Wireless Power Week (WPW), Bordeaux, FRANCE, July 2022, pp.199-202, doi: 10.1109/WPW54272.2022.9854038.
558. K.Hu, Y.Zhou, S.K.Sitaraman and M.M.Tentzeris, "Fully Additively Manufactured Flexible Dual-Band Slotted Patch Antenna for 5G/mmW Wearable Applications", Proc. of the 2022 IEEE International Symposium on Antennas and Propagation (APS), Denver, CO, July 2022, pp.878-879, doi: 10.1109/AP-S/USNC-URSI47032.2022.9886082.
559. A.Boursianis, M.S.Papadopoulou, S.Koulouridis, A.Georgiadis, M.M.Tentzeris and S.Goudos, "Dual-Band Frequency Selective Surface Design Using Artificial Hummingbird Algorithm", Proc. of the 2022 IEEE International Symposium on Antennas and Propagation (APS), Denver, CO, July 2022, pp.982-983, doi: 10.1109/AP-S/USNC-URSI47032.2022.9886108.
560. M.Holda, Y.Cui, M.M.Tentzeris, A.Nauroze and P.Dahmen, "A Novel FSS-Enhanced Pop-Up Card Inspired Corner Reflector Antenna", Proc. of the 2022 IEEE International Symposium on Antennas and Propagation (APS), Denver, CO, July 2022, pp.1584-1585, doi: 10.1109/AP-S/USNC-URSI47032.2022.9886365.
561. V.Palazzi, M.Tentzeris, F.Alimenti, P.Mezzanotte and L.Roselli, "A Novel Additively-Manufactured Pressure Transducer for Zero-Power Wireless Sensing", Proc. of the 2022 European Microwave Conference (EuMC), Milan, ITALY, September 2022, pp.68-71, doi: 10.23919/EuMC54642.2022.9924347.
562. K.Hu, Y.Zhou, S.K.Sitaraman and M.M.Tentzeris, “Additively manufactured flexible material characterization and on-demand ”smart” packaging topologies for 5G/mmwave wearable applications”, Procs. of the 2023 IEEE 73rd Electronic Components and Technology Conference (ECTC), Orlando, FL, May 2023, pp.437-443, doi: 10.1109/ECTC51909.2023.00079.
563. A.Eid, N.Rich, A.Hattori, I.-T.Chen, J.Hester and M.M.Tentzeris, “Deployable Origami Coils for Wireless UAV in-Flight Powering”, Procs. of the 2023 IEEE Wireless Power Technologies Conference & Expo (WPTCE), San Diego, CA, June 2023, pp. 1-4, doi: 10.1109/WPTCE56855.2023.10215585. ***[Second Best Contribution Award]***
564. L.Smith, C.Lynch, C.A.Kaylor, L.A.Campos, L.Cheng, S.Ralph and M.M.Tentzeris, “A Converged Optical and mm-Wave Dual-Band Multi-Beam

Rotman Lens Antenna System Enabling Simplified Designs of 5G/mmW Base Stations and Network Densification", Procs. of the 2023 IEEE International Microwave Symposium (IMS), San Diego, CA, June 2023, pp.1211-1214, doi: 10.1109/IMS37964.2023.10188011.

565. C.A.Lynch III, G.Soto-Valle, J.Hester and M.M.Tentzeris, "mmIDs Enter the 3rd Dimension: A Camera Inspired Broadbeam High-Gain Retrodirective Backscatter Tag", Procs. of the 2023 IEEE International Microwave Symposium (IMS), San Diego, CA, June 2023, pp.1069-1072, doi: 10.1109/IMS37964.2023.10188156.

566. I.-T.Chen, C.A.Lynch III, A.Eid, J.G.D.Hester and M.M.Tentzeris, "Rotman-Lens-Based Reconfigurable Intelligent Surface mmID with Energy Harvesting Capability", Procs. of the 2023 IEEE International Microwave Symposium (IMS), San Diego, CA, June 2023, pp.991-994, doi: 10.1109/IMS37964.2023.10187999.

567. K.Hu, T.Callis and M.M.Tentzeris, "Additively Manufactured Flexible On-Package Phased Antenna Arrays with Integrated Microfluidic Cooling Channels for 5G/mmWave System-on-Package Designs", Procs. of the 2023 IEEE International Microwave Symposium (IMS), San Diego, CA, June 2023 [***selected among the Top Conference Papers and published in IEEE Microwave and Wireless Technologies Letters***].

568. M.Joshi, G.Soto-Valle, C.Lynch and M.M.Tentzeris, "A Machine Learning-Enabled mmID-Sensor for High-Accuracy Orientation and DoA Estimation", Procs. of the 2023 International Conference on Smart and Sustainable Technologies (SpliTech), Split/Bol, CROATIA, June 2023, pp. 1-5, doi: 10.23919/SpliTech58164.2023.10193294.

569. A.T.Alreshaid, Y.Cui, R.Bahr, M.S.Sharawi and M.M.Tentzeris, "A Compact Millimeter-Wave Polarization Reconfigurable Double Patch Antenna", Procs. of the 2023 IEEE Antennas and Propagation Symposium (APS), Portland, OR, July 2023, pp.1865-1866, doi: 10.1109/USNC-URSI52151.2023.10237465.

570. M.Joshi, C.A.Lynch III, G.Soto-Valle, A.Adeyeye, R.Bahr and M.M.Tentzeris, "Machine Learning-Enhanced Gyro mmID-Sensor for Virtual Reality and Motion Tracking Applications", Procs. of the 2023 European Radar Conference (EuRad), Berlin, GERMANY, September 2023, pp.127-130, doi: 10.23919/EuRAD58043.2023.10289453.

571. D.P.Lynch, V.Fusco, M.M.Tentzeris and S.D.Asimonis, "Super-Realized Gain Huygens Antennas", Proc. of the 2024 18th European Conference on Antennas and Propagation (EuCAP), Glasgow, UNITED KINGDOM, March 2024, pp. 1-3, doi: 10.23919/EuCAP60739.2024.10501525.

572. J.Moore, A.M.Graham, M.M.Tentzeris, V.Fusco and S.D.Asimonis, "Low-profile Super-realized Gain Antennas", Proc. of the 2024 18th European Conference on Antennas and Propagation (EuCAP), Glasgow, UNITED KINGDOM, March 2024, pp. 1-4, doi: 10.23919/EuCAP60739.2024.10501430

573. H.Al Jamal, M.Joshi, M.M.Tentzeris and N.Kingsley, "A Multi-Channel, Embedded, and Geometrically Optimized Filter Bank Utilizing Advanced Packaging Topologies for Miniaturized RF Modules in IoT and Wearable Systems", Proc. of the 2024 IEEE 74th Electronic Components and Technology Conference (ECTC), Denver, CO, May 2024, pp.208-214, doi: 10.1109/ECTC51529.2024.00042.

574. G.Soto-Valle, N.Roeske, K.Hu, Y.A.Mensah, J.D.Cressler and M.M.Tentzeris, "Additively Manufactured RF Interconnects for D-Band/sub-THz

Applications", Proc. of the 2024 IEEE 74th Electronic Components and Technology Conference (ECTC), Denver, CO, May 2024, pp.698-703, doi: 10.1109/ECTC51529.2024.00393.

575. Y.Fang, G.Soto-Valle, A.D.Fang, Z.Lin, C.-P.Wong and M.M.Tentzeris, "On-package Additively Manufactured Chemiresistive Sensors for Smart Agriculture: Detection of Airborne Sex Pheromone of Domestic Silk Moths", Proc. of the 2024 IEEE 74th Electronic Components and Technology Conference (ECTC), Denver, CO, May 2024, pp.1733-1736, doi: 10.1109/ECTC51529.2024.00287.

576. I-Ting Chen and M.M.Tentzeris, "Millimeter Wave Dual-Polarized Semi-Passive Energy Detection Backscattering RFID", Proc. of the 2024 IEEE Wireless Power Technology Conference and Expo (WPTCE), Kyoto, JAPAN, June 2024, pp.693-697, doi: 10.1109/WPTCE59894.2024.10557383.

577. H.Al Jamal, C.Hu, N.Wille, K.Zeng and M.M.Tentzeris, “Beyond Planar: An Additively Manufactured, Origami-Inspired Shape-Changing, and RFIC-Based Phased Array for Near-Limitless Radiation Pattern Reconfigurability in 5G/mm-Wave Applications”, Proc. of the 2024 IEEE International Microwave Symposium (IMS), San Diego, CA, June 2024 ***[selected among the top conference papers and published in IEEE Microwave and Wireless Technologies Letters Vol.34, No.6, pp.841-844, June 2024].*** **Best Student Paper Award**

578. N. Wille, H. Al Jamal and M. M. Tentzeris, "An Additively Manufactured mm-Wave Foldable and Bend-Resilient Interconnect for Morphing RF," Proc. of the 2024 IEEE International Symposium on Antennas and Propagation and INC/USNC‐URSI Radio Science Meeting (AP-S/INC-USNC-URSI), Firenze, Italy, 2024, pp. 275-276, doi: 10.1109/AP-S/INC-USNC-URSI52054.2024.10687132

579. K. Hu and M. M. Tentzeris, "Additively Manufactured Ultra-Wideband Cavity-Backed Stacked Patch Antenna for 5G mmWave Conformal Phased Array Systems", Proc. of the 2024 IEEE International Symposium on Antennas and Propagation and INC/USNC‐URSI Radio Science Meeting (AP-S/INC-USNC-URSI), Firenze, Italy, 2024, pp. 705-706, doi: 10.1109/AP-S/INC-USNC-URSI52054.2024.10686737

580. I. -T. Chen and M. M. Tentzeris, "Charge Pump Stage Optimization for 2.4 GHz/5.8 GHz Dual-Band Rectifier", Proc. of the 2024 IEEE International Symposium on Antennas and Propagation and INC/USNC‐URSI Radio Science Meeting (AP-S/INC-USNC-URSI), Firenze, Italy, 2024, pp. 1607-1608, doi: 10.1109/AP-S/INC-USNC-URSI52054.2024.10686260

581. M. Joshi, C. A. Lynch, K. Hu, G. Soto-Valle and M. M. Tentzeris, "A Fully Passive Machine Learning Enabled Lens-Based mmID System for Enhanced Orientation Detection in 5G/mmWave and IoT Applications”, Proc. of the 2024 54th European Microwave Conference (EuMC), Paris, France, 2024, pp. 469-472, doi: 10.23919/EuMC61614.2024.10732846.

582. T.W.Callis, M.Joshi and E.M.Tentzeris, “Novel mmWave/5G RFID Architectures for Next Generation IoT Devices and VR Applications”, Proc. Of the 2024 IEEE Conference on RFID Technologies and Applications (RFID-TA), Daytona Beach, FL, December 2024. **Best Student Paper Award**

IV.C: OTHER PUBLICATIONS

1. E.Tentzeris, N.Dib, L.P.B.Katehi, J.Oswald and P.Siegel, "Modeling of Diode Mounting Structures Using the Finite Difference Time-Domain Method", Proc. of the 1994 International Union of Radio Science (URSI) Symposium, p.277, Seattle, WA, June 1994.
2. K.Goverdhanam, E.Tentzeris and L.P.B.Katehi, "Macromodeling of Circuit Components for High-Frequency Applications", Proc. of the 1995 URSI Symposium, p.361, Newport Beach, CA, June 1995.
3. J.-G.Yook, E.Tentzeris and L.P.B.Katehi, "Parallelization of the Finite Difference Time-Domain Code on Shared Memory Machine", Proc. of the 1996 Progress in Electromagnetics Research Symposium (PIERS), p.85, Innsbruck, AUSTRIA, July 1996.
4. G.E.Ponchak, E.Tentzeris and L.P.B.Katehi, "Finite Ground Coplanar (FGC) Waveguide: A Better Transmission Line", Proc. of the 1998 PIERS Symposium, p.86, Nantes, FRANCE, October 1998.
5. E.M.Tentzeris, D.Staiculescu, N.G.Cafaro and J.Laskar, "Design and Optimization of Novel RF Packaging Structures Using Multiresolution and Statistical Schemes", Invited Paper in the 2000 PIERS Symposium, p.384, Boston, MA, July 2000.
6. N.Bushyager, B.McGarvey and E.M.Tentzeris, "Modeling of Photonic Bandgap (PBG) Devices Using MRTD Adaptive Schemes", Invited Paper in the 2000 PIERS Symposium, p.58, Boston, MA, July 2000.
7. D.Staiculescu, J.Laskar and E.M.Tentzeris, "Flip-Chip vs. Wirebond", Printed Circuit Design Magazine, pp.12-16, June 2002.
8. M.M.Tentzeris, R.Vyas, V.Lakafosis, T.Le, A.Rida and S.Kim, "Conformal 2D/3D Wireless Modules Utilizing Inkjet Printing and Nanotechnology", ***Cover Story*** in the Microwave Magazine, February 2012.

IV.D: PRESENTATIONS (Selected)

1. Invited Presentation in theWorkshop: "Multiresolution Techniques in Electromagnetics" in the 1998 IEEE AP-S Conference, Atlanta, GA, June 1998.
2. Invited Presentation in the Workshop: "Novel Full-Wave Techniques for HF Circuit Analysis" in the 1999 IEEE IMS (MTT-S) Conference, Anaheim, CA, June 1999.
3. Invited Presentation in the Workshop: "Time-Domain Techniques for Radiation Problems" in the 1999 AP-S Conference, Orlando, FL, July 1999.
4. Invited Presentation in the Short Course: "RF Packaging State-of-the-Art" in the 2000 NEPCONWest Conference, Anaheim, CA, March 2000.
5. Invited Presentations in the Workshops: "Novel Techniques for RF Packaging Design" in the 2000 IEEE-CPMT Conference, Las Vegas, NV, May 2000, 2001 IEEE-CPMT Conference, Orlando, FL, May 2001, 2002 IEEE-CPMT Conference,

San Diego, CA, May 2002, 2003 IEEE-CPMT Conference, New Orleans, LA, May 2003 and 2004 IEEE-CPMT Conference, Las Vegas, NV, June 2004.

6. Invited Presentation in theWorkshop: “Time-Domain Techniques for the Design of RF Circuits” in the 2000 IEEE IMS (MTT-S) Conference, Boston, MA, June 2000.
7. Invited Presentations at the National Technical University Athens, Greece in July 2000 (“Wavelets and Electromagnetics”) and October 2001 (“RF Packaging:Challenges and Future”).
8. Invited Presentation in the Workshop: “High-Density/Multilayer RF Interconnects” in the 2001 IEEE IMS (MTT-S) Conference, Phoenix, AZ, May 2001.
9. Invited Presentation at Tokyo University of Technology, Tokyo, Japan (“RF Packaging Solutions for Wireless Communication Systems”), August 2001.
10. Yamacraw Invited Speaker at Georgia Southern University (“Broadband Wireless Access Hardware”), October 2001.
11. Invited Presentation at Ferdinand-Braun Institut, Berlin, Germany, (“Multigridding Approaches for the Modeling and Optimization of Vertically Integrated RF Modules”), July 2002.
12. Invited Presentation at IMEC Research Center, Leuven, Belgium, (“Challenges in RF/Wireless Packaging”), July 2002.
13. Invited Presentation at Tsinghua University, Beijing, China, (“Novel Solutions for RF/Wireless Multilayer Transceivers”), August 2002.
14. Invited Presentation at the Technical University of Munich, Germany, April 2003.
15. Invited Presentation at University of Illinois, Urbana Champaign, IL, April 2003.
16. Invited Presentation in the Workshop: “Concurrent EM, Mechanical and Thermal Modeling of RF MEMS” in the 2003 IEEE IMS (MTT-S) Conference, Philadelphia, PA, June 2003.
17. Invited Presentation in the Workshop: “Active and Integrated Antennas” in the 2003 IEEE IMS (MTT-S) Conference, Philadelphia, PA, June 2003.
18. Invited Presentation at ASME INTERPACK 2003 Symposium, Maui, HI, July 2003.
19. Invited Presentation to the NEC Headquarters, Kansai, Japan, August 2003.
20. Invited Presentation to the National Semiconductor Headquarters, San Jose, CA, August 2003.
21. Invited Presentation to the Siemens Headquarters, Munich, Germany, (“RF/WiFi/mm-wave Modules: 3D Solutions and Materials”), August 2003.
22. Invited Presentation at the School of Physics, National University of Athens, Greece, (“RF/Wireless Integration: Challenges of the Future”), March 2004.
23. Invited Panelist at the 2004 TI System Hardware Design Symposium and Exhibition, Dallas, TX, May 2004.
24. Invited Presentation in the Workshop: “Active and Integrated Antennas” in the 2004 IEEE IMS (MTT-S) Conference, Fort Worth, TX, June 2004.
25. Invited Presentation at the Electrochemical Society Meeting in Honolulu, HI, October 2004.

26. Invited Presentation at University of Piraeus, GREECE, June 2005.
27. Invited Presentations to National Semiconductor, Motorola, TI, Infineon, Siemens in 2005-2006.
28. Invited Presentation at UCLA WINMEC Conference, LA, CA, ("Fully Integrated and Packaged RFID's for Health-Related Applications"), October 2006.
29. Invited Presentation at the University of Illinois, Urbana-Champaign, IL, ("3D RF Integration and Packaging Using Conformal Organics"), October 2006.
30. Invited Presentation to the 3M Research Headquarters, Minneapolis, MN, ("Paper-Printed RFID and Wireless Sensors"), November 2006.
31. Invited Presentation to the AAPA Port Operation, Safety and Information Technology Seminar, Jacksonville, FL, ("RFID andWireless Modules: Challenges for Port-Authority Applications"), April 2007.
32. Invited Presentation at the Symposium in Honor of Prof. W.J.R.Hoefer, ("State-of-the-Art of RF/Wireless Packaging"), Technical University of Munich, GERMANY, May 2007.
33. Invited External PhD Committee "Challenging Member"/ Invited Presentation ("State-of-the-Art of RF/Wireless Paper-printed Electronics"), Mid-Sweden University, Sundsvall, SWEDEN, May 2007.
34. Invited Presentation in the Workshop: "RFID and Printed Electronics" in the 2007 IEEE IMS (MTT-S) Conference, Honolulu, HI, June 2007.
35. Invited Presentation at IEEE PIMRC2007, Athens, GREECE, ("RF Reconfigurable Fully-Packaged Modules for Telecom, Multimedia and Sensing Applications"), September 2007.
36. Invited Presentation at IEEE Eurasia RFID, Istanbul, TURKEY, ("Global Item Tracking Using RFID's"), September 2007.
37. Invited Presentation at National Technical University of Athens, GREECE, ("Paper-Based RF Electronics"), December 2007.
38. Invited Presentation at Ain Shams University, Cairo, EGYPT, ("Flexible Wireless Sensors"), May 2008.
39. Invited Presentation at IEEE COMCAS Meeting, Tel Aviv, ("Paper-based Wearable Sensors"), May 2008.
40. Invited Presentation at Port of Savannah E-Tag Roundtable, Savannah, GA, ("RFID's in a Globalized Port Environment"), June 2008.
41. Invited Presentation at MEMSWAVE Conference, Iraklion, GREECE, ("Paper: The Solution for Ubiquitous Wireless Sensors?"), July 2008.
42. Invited Presentation at LAAS 50th Anniversary Conference, Toulouse, FRANCE, ("Inkjet-Printed Electronics and Power Scavenging: The Path for Environmentally-Friendly Cognitive Intelligence"), October 2008.

43. Invited Presentation at IEEE ISAP Symposium, Taipei, Taiwan, ("Wearable Conformal Wireless Sensor Modules"), October 2008.
44. Invited Presentation at USNC/URSI 2009 Meeting, Boulder, CO, January 2009.
45. Invited Presentation at IEEE RAWCON 2009 Conference, San Diego, CA, January 2009.
46. Invited Presentation at the University of Perugia, Perugia, Italy, March 2009.
47. Invited Presentation at Pischiello Research Center, Pischiello, Italy, March 2009.
48. Invited Presentation at EU Comission, Brussels, Belgium, March 2009.
49. Invited Presentation at IEEE RFID 2009, Orlando, FL, April 2009.
50. Invited Presentation at National Semiconductors (NSC), Norcross, GA, May 2009.
51. Invited Presentation at Dublin Institute of Technology (DIT), Dublin, Ireland, June 2009.
52. Invited Presentation at Heriott-Watt University, Edinburgh, June 2009.
53. Invited Presentation at IEEE Geoscience and Remote Sensing Conference 2009 (IGARSS), Cape Town, July 2009.
54. Invited Presentation at University of Galway, Galway, Ireland, July 2009.
55. Invited Presentation at e-Democracy Conference 2009, Athens, Greece, September 2009.
56. Invited Presentation at COST IC803 Action Meeting, Athens, Greece, October 2009.
57. Invited Presentations at CSIRO/ICT Centre, Sydney, Australia; University of New South Wales, Sydney, Australia; Macquarie University/IEEE New South Wales Section, Sydney, Australia; Monash University, Melbourne, Australia, October 2009.
58. Invited Presentation at the IEEE Sensors 2009 Conference, Christchurch, New Zealand, October 2009.
59. Invited Presentations at National University of Singapore (N.U.S.) and at IEEE RFIT 2009, Singapore, Singapore, December 2009.
60. Invited Presentation at IEEE RAWCON 2010 Conference, New Orleans, LA, January 2010.
61. Invited Presentation at NEDO workshop, Hakone, Japan, February 2010.
62. Invited Presentations at the University of Brazilia, University of Sao Paolo, University of Campinas in Brazil, March 2010.
63. Invited Presentation at the University of Wisconsin, Madison, WI, April 2010.
64. Invited Presentation at GTRI-SEAL, Smyrna, GA, April 2010.
65. Invited Presentation at the IFC-SRC Workshop at M.I.T., Cambridge, MA, May 2010.
66. Plenary IEEE DML Presentation at the European Microwave Week 2011, Paris, FRANCE, October 2010.
67. Invited Presentation at the Asian Pacific Microwave Symposium 2011, Yokohama, JAPAN, December 2010.
68. Invited Presentation at the IEEE RWS Symposium 2011, January 2012.
69. Invited Presentation at the PIERS 2011, Marrakech, MOROCCO, March 2011.
70. Invited IEEE DML Presentation at the University of Valetta, MALTA, March 2011.
71. Invited Presentation at the European Antennas and Propagation Symposium (EuCAP 2011), April 2011.
72. Invited/Featured Presentation at the URSI General Assembly 2011, Istanbul, TURKEY, August 2011.
73. Invited Presentation at the 8th IDGA Military Antennas Coference, Washington, DC, September 2011.

74. ***Plenary Talk*** at the 2011 IEEE Conference on RFID and Technical Applications (RFID-TA), Barcelona, SPAIN, September 2011.
75. ***Invited Presentation*** at IEEE MTT Dallas Section, 2011.
76. Invited Presentation at the 2011 European Microwave Conference, Manchester, UK, October 2011.
77. Invited Presentation at the 2011 CLASTECH Conference, El Segundo, CA, October 2011.
78. Invited Presentation at the IEEE Sensors 2011, Athlone, IRELAND, October 2011.
79. Invited DML Presentation at Tyndall Institute, Cork, IRELAND, November 2011.
80. Invited Presentation at 2011 IDTEX Conference on Energy Harvesting and Wireless Sensor Networks, Boston, MA, November 2011.
81. Invited Presentation at the 2011 ST Energy Harvesting Council, Aix-en-Provence, FRANCE, December 2011.
82. Invited DML Talk at the 2011 IEEE International RF and Microwave Conference (RFM 2011), Seremban, MALAYSIA, December 2011.
83. Invited Presentation at the IEEE WiSNet Symposium 2012, Santa Clara, CA, January 2012.
84. ***Keynote talk*** at the International School on Internet of Things (IoT), Aveiro, PORTUGAL, January 2012.
85. Invited Presentation at the 2012 Winter Enrichment Program (WEP) 2012, Jeddah, Saudi Arabia, January 2012.
86. Invited Presentation at the NSF/SRC/SFI Joint meeting, IRELAND, March 2012.
87. ***Keynote Prsesentation*** at the IEEE APEMC2012 Conference ("Millimeter-Wave and Nanotechnology: The path to "green" electronics?"), SINGAPORE, May 2012.
88. ***Plenary Talk*** at the 2012 Radio Conference, MAURITIUS, September 2012.
89. Invited DML Presentation at University of Alberta, Edmonton, CANADA, February 2013.
90. ***Panelist*** in the "Wireless Power" panel in IEEE Wireless Symposium, Beijing, CHINA, April 2013.
91. Invited Presentation at the 60th Anniversary NJUST Workshop on RF and Microwave/mmW Technologies and Applications, Nanjing, CHINA, September 2013.
92. ***Plenary Talk*** at the 2013 IEEE RFID-TA Conference, Malaysia, September 2013.
93. ***Plenary Talk*** at the 2013 PACO Conference, Gardanne/Aix-en-Provence, FRANCE, October 2013.
94. Invited presentation at IWS2014 Symposium, Xi'an, CHINA, March 2014.
95. Invited presentation at MIKON 2014 Conference, Gdansk, POLAND, June 2014.
96. Invited DML talks in Poland (Krakow, Gdansk, Warsaw), June 2014.
97. Invited DML Talks in Indonesia (Jakarta, Yogyakarta and Bali), September 2014.
98. Invited DML Talks in Peru (Lima, Arequippa, Chiclayo and Puno), March 2015.
99. Invited DML/CRFID-DL talk on Internet of Things, Alexandria, VA, March 2016.
100. Invited Presentation at University of Minnesota ECE Colloquium, March 2016.
    Invited Presentation at the 2016 AFRL Workshop on RF Reconfigurable Electronics, Arlington, VA, May 2016.
101. Invited Talk at Physics Colloquium, Georgia Southern University, Statesboro, GA, August 2016.
102. Keynote University Speaker at Altair/Georgia Tech Symposium, November 2016.

103. Invited IEEE MTT-S Webinar Speaker on “3D Printed RF Circuits”, March 2017.
104. Invited Speaker in 2017 ECTC CPMT seminar on 3D Printing Tools, Technologies and Applications, June 2017.
105. Invited Talks at NTU-MediaTek Workshops 2017 and 2018, SINGAPORE, January 2017 and January 2018.
106. Invited Talk at ICNC 2018 Conference, Maui, HI, March 2018.
107. Invited Talk at CMOC 2018 Symposium, Orange, CT, April 2018.
108. Invited Talk at MITRE Symposium on Additive Manufacturing of Antennas and EM Structures, McLean, VA, April 2018.
109. Invited talk at IEEE ETCMOS 2018 Conference, Whistler, CANADA, May 2018.
110. Invited Talk at 2018 TechConnect World Innovation Conference, Anaheim, CA, May 2018.
111. Invited Tutorial on Inkjet-Printed RFID-Enabled Wireless Sensors, Ottawa, CANADA, August 2018.
112. Invited SRC/GRC e-Workshop on Printed RF Elecgtronics, October 2018.
113. Distinguished Guest Lecture at ARIA European School of Antennas 2018, Beirut, LEBANON, October 2018.
114. ***Keynote Presentation*** at the IEEE WiSEE Conference 2018, Huntsville, AL, December 2018.
115. Invited Talk at ICNC 2019 Conference, Honolulu, HI, March 2019.
116. Invited Talk at University of Hawaii, Honolulu, HI, March 2019.
117. Invited Talk at the University of Alabama, Tuscaloosa, AL, April 2019.
118. Invited Talk at the University of Southern California, LA, April 2019.
119. ***Keynote Presentation*** at the 7th International Symposium on Deformation Characteristics of Geomaterials (IS-Glasgow 2019), Glasgow, UK, June 2019.
120. Invited Talk at American University of Beirut, Beirut, LEBANON, September 2019.
121. Invited Talk at 2019 EMN Meeting on Flexible Electronics, Dubrovnik, CROATIA, October 2019.
122. Invited Talk at the Workshop “Get Started with Flexible Hybrid Electronics”, Fraunhofer EMFT, Munich, GERMANY, October 2019.
123. Invited Talk at European School of Antennas-ARIA, Nice, FRANCE, November 2019.
124. Invited Talk at Fraunhofer IHP, Frankfurt (Oder), GERMANY, December 2019.
125. Invited Talk at TEDxEmory 2020, February 2020.
126. Invited Talk at MIT Horizons Series 2020, June 2020.
127. Invited IEEE CRFID Distinguished Lecture, IEEE PES Kerala Chapter, INDIA, June 2020.
128. ***Keynote Talk*** at Mediterranean Microwave Symposium (MMS) 2020, MOROCCO, December 2020.
129. Invited Talk at Virtual Vertical and Topical IoT Summit at IEEE Radio and Wireless Week – RWW 2021, USA, January 2021.
130. ***Keynote Talk*** at 6th ICREGA 2021, UAE, February 2021.
131. Invited Talk at IEEE International Conference on Flexible Printable Sensors and Systems (FLEPS) 2021 Conference, June 2021.
132. Invited Presentation at 32nd Annual Electronics Packaging Symposium, Binghamton University, NY, USA, September 2021.

133. Invited Presentation at IRTG Energy Conversion System Series, FIU, GERMANY, September 2021.
134. Invited Presentation at Space Solar Power Workshop, IEEE WiSee 2021, USA, October 2021.
135. Invited Lecture at US Government Seminar on Smart Materials and Intelligent Systems (SMIS), The MITRE Corporation, October 2021.
136. ***Keynote Speech***, International Emerging Technologies Competition (IETC) 2021, Universiti Teknology PETRONAS, MALAYSIA, October 2021.
137. ***Keynote Speaker***, SBMO/IEEE International Microwave and Optoelectronics Conference (IMOC 2021), BRAZIL, October 2021.
138. Invited Lecture at Korean Institute of Electromagnetic Engineering and Science (KIEES 2022) Tutorial on Backscattering Communication, KOREA, February 2022.
139. Invited Lecture at International Workshop on Antenna Technology 2022 (iWAT 2022), Dublin, IRELAND, May 2022.
140. ***Plenary Speaker,*** IEEE SpliTech International Conference on Smart and Sustainable Technologies 2022, Split and Bol, CROATIA, July 2022.
141. ***Keynote Speaker***, International Workhop on Antenna Technologies in Shenzhen University (IWAT-SZU 2022), Shenzhen, PR China, July 2022.
142. ***Plenary Speaker,*** EMN Eurosensors 2022 Conference, Leuven, BELGIUM, September 2022.
143. Invited Talk at ICNC 2023 Conference, Honolulu, HI, February 2023.
144. Invited IEEE MTT-S Webinar, December 2023.
145. ***Keynote Speaker,*** IEEE MTT-S Latin America Microwave Conference (LAMC-2023), San Jose, COSTA RICA, December 2023.
146. ***Plenary Speaker,*** IEEE International Conference on Flexible, Printable Sensors and Systems (FLEPS 2024), Tampere, FINLAND, July 2024.
147. Invited Speaker at Workshop: "Reboosting RFID Research: trends for the next decade", IEEE Conference on RFID Technologies and Applications (RFID-TA), Daytona Beach, FL, December 2024.
148. ***Keynote Speaker,*** IEEE MTT-S Latin America Microwave Conference (LAMC-2025), San Juan, PUERTO RICO, January 2025.
149. Invited Talk at ICNC 2025 Conference, Honolulu, HI, February 2025.

IV.E: OTHER SCHOLARLY ACCOMPLISHMENTS – PATENTS (more pending)

1. R.Li, E.M.Tentzeris and J.Laskar, "Multiband Broadband Planar Wire Antennas for Wireless Communication Handheld Terminals", US Patent 6,917,339.

2. M.G.Allen, Y.-K.Yoon, J.-W.Park, Y.-H.Joung, F.Cros, I.Papapolymeroy, E.M.Tentzeris and B.Pan, "Surface Micromachined Millimeter-Scale RF System and Method", US Patent 7,196,666.

3. E.Gebara, J.Laskar, E.M.Tentzeris and A.J.Kim, « Method and System for antenna interference cancellation », US Patent 7,123,676.

4. E.Gebara, J.Laskar and E.M.Tentzeris, "Method and system for antenna interference cancellation", US Patent 7,366,244, US Patent 7,729,341 and EP Patent 1,687,929.

5. D.Thompson, G.Wang, N.D.Kingsley, I.Papapolymerou, E.M.Tentzeris, R.Bairavasubramanian, G.DeJean and R.L.Li, “Multilayer Electronic Component Systems and Methods of Manufacture”, US Patent 7,834,808.

6. E.Gebara, A.J.Kim, J.Laskar, A.Stelliga and E.M.Tentzeris, “Method and System for Reducing Signal Interference”, US Patent 7,522,883.

7. E.Gebara, A.J.Kim, J.Laskar, A.Stelliga and E.M.Tentzeris, « Method and System for reducing Signal Interference », US Patent 8,005,430.

8. E.Gebara, A.J.Kim, J.Laskar, A.Stelliga and E.M.Tentzeris, « System for reducing Signal Interference », US Patent 8,135,350.

9. J.S.Lee, P.D.Schmalenberg, A.Rida, R.L.Li and E.M.Tentzeris, “Microwave Antenna”, US Patent 8,325,092.

10. E.Gebara, A.J.Kim, J.Laskar, A.Stelliga and E.M.Tentzeris, “Reducing signal interference”, US Patent 8,503,940.

11. J.S.Lee, P.D.Schmalenberg, A.Rida, R.L.Li and E.M.Tentzeris, “Antenna with tapered array”, US Patent 8,743,016.

12. A.Rida, L.Yang, A.Margomenos and M.Tentzeris, “Three-dimensional array antenna on a substrate with enhanced backlobe suppression for mm-wave automotive applications”, US Patent 8,786,496.

13. S.Georgakopoulos, E.Tentzeris and B.Cook, “Origami folded antennas”, US Patent 9,214,722.

14. M.Tentzeris and B.Cook, « Additively deposited electronic components and methods for producing the same », US Patent 9,343,233.

15. S.Georgakopoulos and M.Tentzeris, « Misalignment Insensitive Wireless Power Transfer », US Patent 9,406,435

16. S.Georgakopoulos, M.Tentzeris and O.Jonah, « Multi-band and broadband wireless power transfer through embedded geometric configurations », US Patent 9,466,418

17. X.Yi, C.Cho, B.Cook, Y.Wang, M.Tentzeris and R.T.Leon, « Frequency doubling antenna sensor for wireless strain and crack sensing », US Patent 9,506,848.

18. H.Griguer, M.M.Tentzeris, M.Drissi, « Device for Protecting the Human Body and Equipment Against Electromagnetic Radiation », International Patent WO2018236202.

19. S.Georgakopoulos and M.Tentzeris, « Wireless power transfer through embedded geometric configurations », US Patent 9,799,443.

20. J.Hester and E.M.Tentzeris, « Inkjet Printed Flexible Van Atta Array Sensor », US Patent 10,511,100.

21. J. Bito and E.M.Tentzeris, « Hybrid Energy Harvesting Systems and Devices Incorporating the Same », US Patent 10,566,844.

22. N.Arora, G.D.Abowd, M.Gupta, D.Osorio, S.F.Shahmiri, T.E.Starner, Y.-C.Wang, Z.Wang, Z.L.Wang, S.L.Zhang, P.McAughan, Q.Xue, D.Bansal, R.Bahr and E.Tentzeris, « Thin and flexible self-powered vibration transducer employing triboelectric nanogeneration », US Patent 10,932,063.

23. A.Eid, J.G.D.Hester and M.Tentzeris, « High gain and large beamwidth rotman-lens-based and mm-wave energy harvester systems and associated methods », WIPO (PCT) W02020223486A1

24. J.G.D.Hester and E.M.Tentzeris, « System for Sensing Backscatter Tag Communications from Retrodirective Antenna Arrays », US Patent 11,474,233.

25. N.Arora, G.D.Abowd, M.Gupta, D.Osorio, S.F.Shahmiri, T.E.Starner, Y.-C.Wang, Z.Wang, Z.L.Wang, S.L.Zhang, P.McAughan, Q.Xue, D.Bansal, R.Bahr and E.Tentzeris, « Thin and Flexible Self-powered Vibration Transducer employing Triboelectric Nanogeneration », US Patent 11,647,340.

26. X.He, E.Tentzeris, R.A.Bahr and Y.Fang, « RF Systems on Antenna and Method of Fabrication », US Patent 11,901,623

27. A.Eid, J.G.D.Hester and E.M.Tentzeris, « High Gain and Large Beamwidth Rotman-Lens-Based and mm-Wave Energy Harvester Systems and Associated Methods », US Patent 12,015,195.

28. A.Eid, J.G.D.Hester and E.M.Tentzeris, « High Gain and Large Beamwidth Rotman-Lens-Based and MM-Wave Backscattering and Energy Harvesting Systems and Associated Methods », US Patent 12,199,346.

V: SERVICE

V.A. PROFESSIONAL CONTRIBUTIONS

V.A.1. Conference Leadership (Selected)

- General Co-Chair in 2025 IEEE International Conference on Additively Manufactured Electronic Systems (AMES), Atlanta, GA, April 2025.
- General Co-Chair in 2023 IEEE WPTCE Conference, San Diego, CA, June 2023.
- Multi-Society Panel Session Organizer and Chair in 2023 IEEE IMS Conference, San Diego, CA, June 2023.
- Co-Chair in 2019 IEEE Antenas and Propagation Conference (AP-S), Atlanta, GA, July 2019.
- ADCOM Member of IEEE CRFID, 2017-present.
- Panel Session Organizer and Chair in 2011 IEEE RFID-TA Conference, Barcelona, SPAIN, September 2011.
- Technical Program Chair in 2008 IEEE IMS hold in Atlanta, GA, June 2008.
- Technical Program Co-Chair in 2009 ACES Conference hold in Monterey, CA, March 2009.
- Interactive Forum Chair in 2009 IEEE APS Conference, Charleston, SC, May 2009.

- Panel Session Organizer in 2010 IEEE ECTC Conference, Las Vegas, NV, June 2010.
- Member of the Technical Program Committee (TPC) of the annual IEEE International Microwave Symposium (IEEE-IMS), June 2001-present.
- Member of the Technical Program Committee (TPC) of the annual IEEE Antennas and Propagation Symposium (IEEE-APS), January 2001-present.
- Member of the Technical Program Committee (TPC) of the annual IEEE Electronic Components and Technology Conference (IEEE-ECTC), June 2003-present.
- Member of the Technical Program Committee (TPC) of the annual IEEE Vehicular Technology Conference (IEEE-TC), September 2006-September 2009.
- Member of the Technical Program Committee (TPC) of the annual European Microwave Conference (EuMC), January 2008-present.
- Member of the International Advisory Committee of 2007 PIERS Conference held in Pisa, ITALY, March 2007.
- Member of the International Program Committee of annual IASTED International WOC Conference held in Banff, CANADA, June 2004-present.
- Member of the Technical Program Committee of 2007 IEEE Conference on Wireless Rural and Emergency Communications (WRECOM), Rome, ITALY, October 2007.
- Conference Chairman of 2005 IEEE CEM-TD held in Atlanta, GA, in September 2005.
- Member of the International Advisory Committee of 2007 IEEE CEM-TD Conference held in Perugia, ITALY, in October 2007.
- Technical Program Co-Chair in ARFTG Conference, Atlanta, GA, December 1999.
- Vice-Chair of the IEEE Components Packaging, and Manufacturing Technology Society (IEEE-CPMT) Technical Committee TC16 (RF Subcommittee), January 2000-2005.
- Chair: Numerous Special/Regular Sessions in IEEE IMS, RAWCON, APS, APMC and EuMW Conferences
- Organizer of 20+ Workshops/Short Courses in IEEE IMS, APS, EuMW, APMC, RWS.
- Founder and organizer of numerous panels and special sessions on mmID (millimeter-wave RFID's) and millimeter-wave automotive radars.

V.A.2. Other Conference Activities

- Member of the Student Paper Contest Committee, 2000 IEEE-IMS Conference, Boston, MA, June 2000.
- Member of the Student Paper Contest Committee, 2010 IEEE RFID-TA Conference, Guangzhou, CHINA, June 2010.
- Member of the Student Paper Contest Committee, 2011 IEEE RFID-TA Conference, Barcelona, SPAIN, September 2011.
- Member of the Student Paper Contest Committee, 2012 IEEE RWS Symposium, Santa Clara, CA, January 2012.
- Member of the Steering Committee and the Student Paper Contest Committee, 1998 IEEE-AP Conference, Atlanta, GA, June 1998.

V.A.3. Editorial/Reviewer Activity

- Member of the Editorial Board, Proceedings of IEEE, 2019-2022

- Guest Editor for the Special Issue of Proceedings of IEEE ("Energy Harvesting Systems") to be published in November 2014.
- Associate Editor for the IEEE Transactions on Microwave Theory and Techniques from June 2007-June 2009.
- Guest Editor for the Special Issue of IEEE Transactions on Microwave Theory and Techniques ("RFID Architectures") published in May 2009.
- Associate Editor for the ETRI Journal from May 2009-May 2010.
- Associate Editor at the ACES Society Newsletter from April 2001-April 2005.
- Associate Editor at the International Journal of Antennas and Propagation (IJAP) from 11/1/2006-11/1/2007.
- Guest Editor for the Special Issue on RFID's of the Proceedings of European Microwave Association published in December 2007.
- Guest Editor for the Special Issue of International Journal of Antennas and Propagation ("Conformal Antennas") to be published in December 2012.
- Guest Editor for International Journal of Numerical Modeling for 2006.
- Member of the NSF Proposal Reviewers' Panels of 5/30-5/31/00, 5/17-5/18/01, 4/15-4/16/02, 6/15-6/16/02, 12/15-12/16/03, 10/21-10/22/04, 5/15-5/16/06, 11/24-11/25/08, 6/7-6/8/10, 1/5-1/6/12, 3/13, 10/27-10/28/14, 10/25/16, 3/29-3/30/17, 2/20-2/21/18, 5/1-5/2/18, 10/23-10/24/18, 4/15-4/16/20
- Member of the Proposal Reviewers' Committee for NSERC (Canada), ISF (Israel), CRDF (U.S.A.), DFG (Germany), Singapore Research Foundation (Singapore), Hong Kong Research Committee (China), KAUST (Saudi Arabia), State of Indiana Research Committee (U.S.A.), State of S.Carolina Research Committee (U.S.A.), EPSRC (U.K.), ANR (France), Austrian Science Fund-FWF (Austria).
- *Reviewer:* IEEE Transactions on Microwave Theory and Techniques (54 papers, 1996-present), IEEE Transactions on Antennas and Propagation (36 papers, 1997-present), The International Journal of Microcircuits and Electronic Packaging (3 papers, 1998 present), IEEE Microwave and Guided Wave Letters/Microwave and Wireless Components Letters (39 papers, 1998-present), IEEE Transactions on Electromagnetic Compatibility (8 papers, 2000-present), International Journal of Numerical Modeling (12 papers, 2000-present), International Journal of Electronics (2 papers, 2001-present), IEEE Transactions on Advanced Packaging (58 papers, 2002-present), Journal of the Optical Society of America (5 papers, 2000-present), IEEE Transactions on Components and Packaging (6 papers, 2002-present), IEEE Transactions on Signal Processing (3 papers, 2002-present), IEEE Electron Devices Letters (4 papers, 2003-present), IEEE Transactions on Electron Devices (2 papers, 2005-present), International Journal of RF and Microwave Computer-Aided Engineering (10 papers, 2003-present), IEEE/ASME Journal on MEMS (3 papers, 2004-present), SPIE OE Journal (2 paper, 2004-present), IEEE Transactions on Circuits and Systems I, (3 paper, 2004-present) ETRI Journal (10 papers, 2006-present), Radio Science Journal (5 papers, 2004-present), Measurement Science and Technology Journal (3 papers, 2007-present), IEEE Sensors Journal (2 papers, 2007-present), International Journal of Microwave Science and Technology (1 paper, 2007-present), IEEE Microwave Magazine (1 paper, 2007-present), IEEE/OSA Journal of Lightwave Technology (2 papers, 2007-present), IEEE Design and Test of Computers (2 papers, 2007-

present), IEEE Antennas and Propagation Magazine (1 paper, 2007-present), Journal of Electronic Imaging (1 paper, 2007-present).

V.A.4. Professional Society Activity

- IEEE, Fellow, (MTT, AP, CPMT Societies), 2010-present.
- IEEE CRFID Committee/Council (IEEE Inter-Society Committee on RFID Technologies) Founding Member (2008) and Secretary-Treasurer (2011).
- IEEE MTT TC-24 (RFID) Founder-Chair, 2009-present.
- IEEE MTT TC-25 (Nanotechnology) Founder-Member, 2010-present.
- IEEE MTT TC-26 (Wireless Power Transfer) Founding Member, 2011-present
- IEEE MTT Representative at the IEEE CRFID Committee, 2009-2015.
- URSI, Member (Commission D), 1999-present.
- PIERS, Fellow, 2007-present.
- IEEE MTT-15 Committee, Member, 2006-2008.
- IEEE CPMT TC-16 Committee, Member, 2002-present [served as Chair and Vice-Chair since 2003].
- European Microwave Association (EuMA), Associate Member, 2005-present.
- Technical Chamber of Greece, Member, 1993-present.
- Chairman of the IEEE MTT/AP Atlanta Chapter from 1/1/02-12/31/02.
- Member of the Board Committee of the IEEE MTT/AP Atlanta Chapter from 1999-2002.
- Organizer of IEEE International Microwave Symposium (IMS) 2023 Intersociety (EPS, MTT-S, APS, SSCS, EMC-S and CASS) Panel Session on "RF/Microwave Packaging and Interconnect Technologies", San Diego, CA, June 2023.
- IEEE EPS/CPMT representative in IEEE RFID Council since 2015
- Annual participation in NextFlex Innovation Days (Prof. Tentzeris and team members)
- NextFlex Workshop: FHE for Defense Applications (Participation of Prof. Tentzeris' team)
- Georgia Tech hosted, in conjunction with NextFlex, the Flexible Hybrid Electronics Manufacturing Innovation Institute, a workshop that focused on expert presentations of state-of-the-art, along with the defining a technical roadmap targeting on the power aspects of FHE device, called "Powering the Internet of Everything". (Organization and participation), November 2017.
- Participation in Semi FlexTech/NBMC & NextFlex Technology Workshops: "The Evolution of Electronics", Milpitas and San Jose, CA, January 2023.
- Participation in Semi/FlexTech/NBMC & Nextflex Technology Workshops: "Enabling the Future of Electronics", Binghamton University, Binghamton, NY, April 2024.
- Participation/Talk at FlexTech, a SEMI strategic association partner, one-day Flexible Hybrid Electronics and Sensors Automotive Industry workshop in Detroit, MI, September 2017.
- Participation and presenter at IPC APEX Expo 2019 giving a talk on "Additive Manufacturing for Next Generation Microwave Electronics and Antennas", February 2019.

- Participant and presenter at Semicon West 2021 in Flexible Electronics Innovation on "Additively Manufactured Flexible Materials, Interconnects and Transmission Lines for Flexible Wearable 5G/mmWave Applications", December 2021.
- Participant in NextFlex Human Monitoring Systems TWG Roadmapping and Integrated Array Antennas TWG Roadmapping Committees since 2021.

V.A.5. Professional Collaborations/Technical Advising

• Northrop, Rockwell-Collins, Raytheon, Motorola, Intel, IBM, Google, Lockheed, National Semiconductors, Kyocera, Asahi, NEDO, FHWA, Rogers, Siemens, Lucent, Hitachi, Intracom, Samsung-Techwin, ETRI, Manheim, Port of Savannah, Avery-Denison, 3M, Excelletron, Infineon, Dimatix, DELL, Microsoft Research Center, Toyota TEMA, NASA Glenn/Lewis Center, Qualcomm, Eaton Corporation, Samsung, Honeywell

• University of Michigan, Ann Arbor, MI 9/92-5/98

Graduate Research Assistant (GSRA) with the Radiation Laboratory.

• Jet Propulsion Laboratory (J.P.L.), Pasadena, CA 9/92-6/94

Collaborator on Optimization of Novel Waveguide Probes.

• National Technical University of Athens, GREECE 9/90-8/92

Research Assistant with the Microwaves Laboratory.

V.B. CAMPUS CONTRIBUTIONS

- Associate Director for RFID and Sensors Research at Georgia Electronic Design Center (GEDC), 8/1/05-12/09.
- Associate Director for RF Research at Georgia Tech Packaging Research Center (PRC), 8/1/03-8/1/05.
- Chair of ECE Electromagnetics Technical Interest Group, 2011-2012.
- Member of the ECE RPT Committee, Fall 2011.
- Active member of the Georgia Tech ORS Program, 9/2008-Present.
- Member of the ECE Graduate Recruitment Committee, 9/1/00-8/31/02.
- Leader of the Novel Integration Techniques Subthrust of the Broadband Hardware Access Thrust of the Yamacraw Initiative of the State of Georgia, 1/1/00-8/1/05.
- Member of the ECE Research Committee, 9/98-8/00, 9/02-5/2004.
- Member of the ECE Education / Research Technology Transfer Committee, 9/2004-5/2005.
- Member of the ECE Graduate Student Recruitment Committee, 9/2005-5/2006.
- Member of the ECE Undergraduate Committee, 9/2006-5/2009.
- Member of the ECE Undergraduate Curriculum Committee, 9/2009-5/2011.
- Head of the RF Alliance of Georgia Tech Packaging Research Center (PRC), 1/1/01-12/31/06.
- Member of Georgia Tech Broadband Institute (GTBI), 9/1/99-5/2004.
- Member of M.Sc. Thesis (21), Ph.D. Qualifying Exam (19), Ph.D. Thesis Proposal (62) and Ph.D. Thesis Defense (65) Committees

VI. EXPERT WITNESS/LITIGATION EXPERIENCE

- LG vs. NFCT IPR: 2014 [Fish & Richardson P.C.] / 2 IPRs

- HTC vs. NFCT IPR: 2014-2015 [Perkins Coie LLP]; deposed on 4/30/15, 5/1/15, 9/30/15 and 11/19/15 / 2 IPRs
- HID vs. Morphotrust: 2017-2018 [Finnegan]; deposed on 5/25/18 / 4 IPRs
- DeCurtis vs Carnival Cruises: 2021 [Quinn Emmanuel]; deposed on 10/25/21
- Intel vs Theta: 2023-2024 [Cooley LLP] ; deposed on 1/12/24
- Hanshow vs SES-Imagotag: 2022-2024 [Arch & Lake LLP]; deposed on 8/16/24 8/23/24 and 1/7/25/ 3 IPRs
- Intel vs Ericsson: 2023-2024 [Goodwin Procter LLP]; deposed on 12/17/24 / IPR
- 12+ Additional IPR Cases
- References: Ai Bing and Miguel Bombach (Perkins Coie), Won Yoon (Fish & Richardson), David Seastrunk (Finnegan), Patrick Schmidt (Quinn Emmanuel), Hao Tan and Christopher Fahy (Arch & Lake), Lori Gordon (Goodwin)

APPENDIX B

APPENDIX B (LIST OF MATERIALS CONSIDERED)

Exhibit No.	DESCRIPTION
1001	U.S. Patent No. 11,694,053 ("'053")
1002	File History of U.S. Application No. 14/517,495 ("'053FH")
1004	U.S. Patent App. Pub. No. 2010/0112941 ("Bangs")
1005	U.S. Patent App. Pub. No. 2009/0040022 ("Finkenzeller")
1006	U.S. Patent App. Pub. No. 2009/0215489 ("Kerdraon")
1007	U.S. Patent App. Pub. No. 2008/0073426 ("Koh")
1008	U.S. Patent App. Pub. No. 2007/0156436 ("Fisher")
1009	File History for U.S. Patent Application No. 12/188,346 ("'346 Application File History")
1010	File History for U.S. Patent Application No. 13/038,341 ("'341 Application File History")
1011	File History for U.S. Patent No. 9,483,722 ("'722 File History")
1012	Redline Comparison of Specifications for U.S. Patent App. No. 12/188, 346 and U.S. Patent App. No. 13/038,341
1013	U.S. Patent No. 9,122,965 ("'965")
1015	Dachs, C., NFC — The Intuitive Contactless Technology Becomes Reality, 122 E&I Elektrotechnik und Informationstechnik 466 (Dec. 1, 2005) ("Dachs")
1016	U.S. Patent No. 9,483,722 ("'722")
1017	U.S. Patent App. Pub. No. 2005/0224589 ("Park")
1018	U.S. Patent No. 8,260,199 ("Kowalski")
1021	U.S. Patent App. Pub. No. 2007/0035396 ("Chand")
1022	U.S. Patent App. Pub. No. 2008/0163361 ("Davis")

Exhibit No.	DESCRIPTION
1023	U.S. Patent No. 5,943,624 ("Fox")
1024	U.S. Patent No. 6,026,125 ("Larrick")
1025	U.S. Patent App. Pub. No. 2009/0227882 ("Foo")
1026	U.S. Patent App. Pub. No. 2008/0235796 ("Buhr")
1029	U.S. Patent App. Pub. No. 2008/0126260 ("Cox")
1030	Ortiz, E., An Introduction to Near-Field Communication and the Contactless Communication API (June 2008)
1031	U.S. Patent App. Pub. No. 2004/0133787 ("Doughty")
1033	U.S. Patent App. Pub. No. 2008/0194200 ("Keen")
1034	International Patent Pub. No. WO2007/135434 ("Wilson")
1035	U.S. Patent App. Pub. No. 2008/0169351 ("Whiting")
1036	Mayes, K. et al., Smart Cards, Tokens, Security and Applications (December 11, 2007)

* I also considered any additional materials referenced in my declaration.