UNITED STATES PATENT AND TRADEMARK OFFICE

BEFORE THE PATENT TRIAL AND APPEAL BOARD

SAMSUNG ELECTRONICS CO., LTD., and

SAMSUNG ELECTRONICS AMERICA, INC.,

Petitioners,

v.

ICASHE, INC.,

Patent Owner.

Case IPR2025-00642

Patent No. 8,403,053

CORRECTED PATENT OWNER'S PRELIMINARY RESPONSE UNDER 35 U.S.C. §313 AND 37 C.F.R. §42.107

TABLE OF CONTENTS

Page

I. PRELIMINARY STATEMENT 1

II. FACTUAL BACKGROUND OF THE ’053 PATENT 2

A. State of the Art at the Time of Invention 2

B. Overview of the ’053 Patent 3

III. PRIORITY DATE OF THE ’053 PATENT 11

IV. CLAIM CONSTRUCTION 11

V. PERSON OF ORDINARY SKILL IN THE ART 12

VI. THE PETITION DOES NOT ESTABLISH A REASONABLE LIKELIHOOD THAT THE APPLIED REFERENCES RENDER THE CHALLENGED CLAIMS UNPATENTABLE 12

A. The Petition Does Not Establish a Reasonable Likelihood that Bangs With or Without Skill in the Art Renders Unpatentable Claims 1-8 and 17-20 (Ground 1) 13

1. Overview of Bangs 13

2. The Petition Does Not Establish that Bangs Discloses All Limitations of the Challenged Claims 15

a. Claim 1 15

b. Claims 2-8 22

c. Claim 17 23

d. Claims 18-20 23

B. The Petition Does Not Establish a Reasonable Likelihood that Bangs in View of Kerdraon Renders Unpatentable Claims 1-8 and 17-20 (Ground 2) 24

1. Overview of Kerdraon 24

2. The Petition Does Not Establish that a POSITA Would Have Either a Reason to Combine Bangs and Kerdraon or an Expectation of Success from the Combination 25

3. The Petition Fails to Demonstrate that Bangs in combination with Kerdraon discloses “active transmit drive 32

C. The Petition Does Not Establish a Reasonable Likelihood that Bangs in View of Koh Renders Unpatentable Claims 1-8 and 17-20 (Ground 3) 33

1. Overview of Koh 33

2. The Petition Does Not Establish that a POSITA Would Have Either a Reason to Combine Bangs and Koh or an Expectation of Success from the Combination 34

3. The Petition Fails to Demonstrate that Bangs in combination with Koh discloses "active transmit drive 35

D. The Petition Does Not Establish a Reasonable Likelihood that Bangs in View of Fisher Renders Unpatentable Claims 2-4, 19-20 (Ground 4) 36

E. The Petition Does Not Establish a Reasonable Likelihood that Bangs in View of Kerdraon and Fisher Renders Unpatentable Claims 2-4, 19-20 (Ground 5) 37

F. The Petition Does Not Establish a Reasonable Likelihood that Bangs in View of Koh and Fisher Renders Unpatentable Claims 2-4, 19-20 (Ground 6) 38

VII. PATENT OWNER DOES NOT WAIVE ARGUMENTS ABOUT OBJECTIVE INDICIA OF NON-OBVIOUSNESS 38

VIII. CONCLUSION 39

TABLE OF AUTHORITIES

Page

Cases

Astra Aktiebolag v. Andrx Pharms., Inc.,
222 F. Supp. 2d 423 (S.D.N.Y. 2002) 21

Honeywell Int'l Inc. v. Mexichem Amanco Holding S.A. DE C.V.,
865 F.3d 1348 (Fed. Cir. 2017) 26, 34

In re Fritch,
972 F.2d 1260 (Fed. Cir. 1992) 22, 23

In re Magnum Oil Tools Int'l, Ltd.,
829 F.3d 1364 (Fed. Cir. 2016) 25, 34

In re Omeprazole Pat. Litig.,
84 F. App'x 76 (Fed. Cir. 2003) 21

Ortho-McNeil Pharm., Inc. v. Mylan Lab'ys, Inc.,
520 F.3d 1358 (Fed. Cir. 2008) 22, 23

Phillips v. AWH Corp.,
415 F.3d 1303 (Fed. Cir. 2005) 12

Redline Detection, LLC v. Star Envirotech, Inc.,
811 F.3d 435 (Fed. Cir. 2015) 26, 34

Statutes

35 U.S.C. § 314 1

37 C.F.R. § 100(b) 12

37 C.F.R. § 42.107 1

PATENT OWNER'S EXHIBIT LIST

Ex. 2001	Complaint for Patent Infringement, *iCashe, Inc. v. Samsung Electronics Co., Ltd. and Samsung Electronics America, Inc.*, Civil Action No. 2:24-cv-00429, Dkt. 1 (June 6, 2024)
Ex. 2002	Defendants Samsung Electronics Co., Ltd. and Samsung Electronics America, Inc.'s Answer and Defenses to Plaintiff's Complaint for Patent Infringement, *iCashe, Inc. v. Samsung Electronics Co., Ltd. and Samsung Electronics America, Inc.*, Civil Action No. 2:24-cv-00429, Dkt. 25 (October 1, 2024)
Ex. 2003	Defendants Samsung Electronics Co., Ltd. and Samsung Electronics America, Inc.'s Invalidity Contentions, *iCashe, Inc. v. Samsung Electronics Co., Ltd. and Samsung Electronics America, Inc.*, Civil Action No. 2:24-cv-00429, (November 20, 2024)
Ex. 2004	Order, *iCashe, Inc. v. Samsung Electronics Co., Ltd. and Samsung Electronics America*, Civil Action No. 2:24-cv-00429, Dkt. 38 (May 1, 2025)
Ex. 2005	Affidavit of Service of Complaint, *iCashe, Inc. v. Samsung Electronics Co., Ltd. and Samsung Electronics America, Inc.*, Civil Action No. 2:24-cv-00429, Dkt. 11 (June 17, 2024)
Ex. 2006	Plaintiff iCashe, Inc.'s Notice of P.R. 3-1 Disclosures and P.R. 3-2 Production, *iCashe, Inc. v. Samsung Electronics Co., Ltd. and Samsung Electronics America, Inc.*, Civil Action No. 2:24-cv-00429, Dkt. 16 (September 5, 2024)
Ex. 2007	Notice of Compliance, *iCashe, Inc. v. Samsung Electronics Co., Ltd. and Samsung Electronics America, Inc.*, Civil Action No. 2:24-cv-00429, Dkt. 36 (November 20, 2024)
Ex. 2008	Defendants' Ineligibility Contentions, *iCashe, Inc. v. Samsung Electronics Co., Ltd. and Samsung Electronics America, Inc.*, Civil Action No. 2:24-cv-00429, (November 20, 2024)
Ex. 2009	United States Patent No. 8,451,122 (Narendra)

Ex. 2010	United States Design Patent No. D736,213 (Kang)
Ex. 2011	United States Design Patent No. D736, 212 (Kang)
Ex. 2012	United States Design Patent No. D736,216 (Kang)
Ex. 2013	United States Design Patent No. D739,856 (Kang)
Ex. 2014	United States Design Patent No. D772,232 (Cho)
Ex. 2015	United States Design Patent No. D773,467 (Cho)
Ex. 2016	*Reserved*
Ex. 2017	*Reserved*
Ex. 2018	Defendants' Invalidity Contentions, Exhibits C-C9, *iCashe, Inc. v. Samsung Electronics Co., Ltd. and Samsung Electronics America, Inc.*, Civil Action No. 2:24-cv-00429, (November 20, 2024)
Exs. 2019 – 2022	*Reserved*
Ex. 2023	Defendants' Invalidity Contentions, Exhibits H, *iCashe, Inc. v. Samsung Electronics Co., Ltd. and Samsung Electronics America, Inc.*, Civil Action No. 2:24-cv-00429, (November 20, 2024)
Ex. 2024	*Reserved*
Ex. 2025	*Reserved*
Ex. 2026	Defendants' Ineligibility Contentions, Appendix C, *iCashe, Inc. v. Samsung Electronics Co., Ltd. and Samsung Electronics America, Inc.*, Civil Action No. 2:24-cv-00429, (November 20, 2024)
Exs. 2027 – 2030	*Reserved*
Ex. 2031	Declaration of Marc E. Levitt, Ph.D.
Ex. 2032	*P5CN072 Secure Dual Interface PKI Smart Card Controller – Short Form Specification*, Rev. 1.0 (Mar. 9, 2005)

Ex. 2033	*PN532/C1 Near Field Communication (NFC) controller – Product short data sheet*, Rev. 3.2 (Sept. 20, 2012)

I. PRELIMINARY STATEMENT

Pursuant to 37 C.F.R. § 42.107, Patent Owner iCashe, Inc. ("iCashe") submits this Preliminary Response to the Petition for *Inter Partes* Review ("IPR") of U.S. Patent No. 11,694,053 (the "'053 patent"). Paper 2 ("Petition"). Petitioners Samsung Electronics Co., Ltd. and Samsung Electronics America, Inc. (collectively, "Petitioners") challenge the validity of claims 1-8 and 17-20 of the '053 patent. For the reasons identified in Patent Owner's Memorandum in Support of Discretionary Denial, institution should be discretionarily denied pursuant to 35 U.S.C. § 314. Paper 7 ("Discretionary Denial Memorandum"). Namely, (1) the district court trial in the related litigation will precede a final written decision by five months; (2) Samsung waited more than nine months to file its petitions for *inter partes* review; (3) the district court denied Samsung's motion to stay and will likely reject a renewed motion; (4) *inter partes* review will not moot the district court proceedings; (5) the petition relies on extensive expert testimony; and (6) the '053 patent family has been in force since 2011.

In addition to the reasons identified in Patent Owner's Discretionary Denial Memorandum, *inter partes* review should not be instituted because the Petition fails to establish a reasonable likelihood that any of the challenged claims are unpatentable. The references and combinations asserted in the Petition do not disclose all of the limitations of the challenged claims, as discussed below and

confirmed in the Declaration of Marc E. Levitt, Ph.D.—who worked as a POSITA in the field at the time of the inventions. In addition, the Petition advances unsupported arguments that a POSITA would have been motivated to combine references, the combination of which would require undue experimentation without any expectation of success. Accordingly, Patent Owner requests that the Board deny institution of *inter partes* review.

II. FACTUAL BACKGROUND OF THE '053 PATENT

A. State of the Art at the Time of Invention

Devices that communicate using RF communications, such as near field communication (NFC) devices, traditionally operate in either a passive mode or an active mode. Ex. 1001 at 1:47-48; Ex. 2031 (Levitt) at ¶ 34. A passive RF device is characterized by the fact that it does not generate its own RF field; it relies instead upon an interrogating RF field generated by an active device. Ex. 1001 at 1:56-57; Ex. 2031 at ¶ 35. To communicate with the active device, the passive device modulates and reflects back the signal received from the active device. Ex. 1001 at 1:57-61; Ex. 2031 at ¶ 35. Passive devices are typically not powered. Ex. 1001 at 1:56; Ex. 2031 at ¶ 35. Instead, the passive device builds a charge from the active device's signal in order to modulate and return the active device's signal. Ex. 1001 at 1:57-61; Ex. 2031 at ¶ 35.

In contrast to passive devices, active devices are typically connected to a power source and generate an RF signal. Ex. 1001 at 1:48-51; Ex. 2031 at ¶ 36. An active device communicates by transmitting its own generated signal to another device, rather than modulating a received signal. Ex. 1001 at 1:59-61; Ex. 2031 at ¶ 36.

Active and passive RF devices communicate differently. Ex. 2031 at ¶ 37. When a passive device communicates with an active device, the active device continuously generates an RF signal and the passive device modulates and reflects back the same signal. *Id.* When two active devices communicate, the devices must alternate their transmissions, such that one device receives while the other device transmits. *Id.* A device cannot both listen and transmit simultaneously. *Id.*

B. Overview of the ’053 Patent

The inventors of the ’053 patent claims created a new mechanism for contactless, secure payments that would interface with existing smartcard infrastructure and allow consumers to make smartcard payments using their mobile phones. *Id.* at ¶ 38. Inventors of the ’053 patent sought to incorporate smartcard functionality into a mobile device, thereby allowing users to make contactless radio frequency (RF)-based payments without the need to carry a separate smartcard. *Id.* They achieved this by developing, *inter alia*, “performance enhancement circuits” that would allow the phone to operate as an active RF

device, but to interface with existing smartcard point-of-sale infrastructure by appearing to the point-of-sale reader as a passive RF device. *Id*

The ’053 patent, entitled “Method and Apparatus for Transmitting Data via NFC for Mobile Applications Including Mobile Payments and Ticketing,” was filed as U.S. Pat. App. No. 17/179,237 on February 18, 2021. The ’053 patent claims priority to the original patent in the priority chain, Pal. No. 7,961,101, the application for which was filed on August 8, 2008 as U.S. Pat. App. No. 12/188,346.

The Petition challenges 12 claims of the ’053 patent: two independent claims (claims 1, 17) and 10 dependent claims (claims 2-8, 18-20). Independent claim 1 of the ’053 patent recites:

1. [preamble] A mobile device comprising:

[1.a] a power source;

[1.b] a smartcard controller coupled to the power source to receive power;

[1.c] an antenna tuned to operate at substantially 13.56 MHz, wherein the antenna interacts with a Near Field Communication (NFC) reader external to the mobile device; and

[1.d] an active transmit driver circuit coupled to the power source to receive the power, wherein the active transmit driver circuit affects transmission of data between the antenna and the NFC reader.

Ex. 1001, 20:10-21.

Independent claim 17 recites:

17. [preamble] A method of near field communication between a mobile device and an NFC reader, the method comprising:

[17.a] coupling a smartcard controller and an active transmit driver circuit to a power source of the mobile device;

[17.b] providing power to the smartcard controller and the active transmit driver circuit from the power source of the mobile device;

[17.c] coupling the active transmit driver circuit to an antenna of the mobile device, wherein the antenna is tuned to operate at substantially 13.56 MHz; and

[17.d] driving transmission of data by the active transmit driver circuit from the antenna to the NFC reader.

Ex. 1001 at 21:13-24.

The inventions claimed in the ’053 patent improved the process of effectuating smartcard transactions by integrating a smartcard controller into a mobile device, together with a small form factor antenna, by using performance enhancement circuits coupled between the smartcard controller and the antenna. *See, e.g.*, Ex. 1001 at Abstract, 3:10-14, 19:31-42; Ex. 2031 at ¶ 39. In developing this improvement, the ’053 patent inventors sought to design a system that would interface with existing smartcard infrastructure. Ex. 1001 at 10-14; Ex. 2031 at ¶ 40.

Conventional point-of-sale smartcard readers are active devices that are configured to communicate with passive devices, such as conventional smartcards in the form of, e.g., credit cards. Ex. 2031 at ¶ 40. Therefore, the ’053 patent inventors sought to incorporate smartcard circuitry into a mobile device, e.g., a mobile phone, in a manner that could communicate in a passive mode with conventional smartcard readers. Ex. 1001 at 3:10-14; Ex. 2031 at ¶ 40.

The ’053 patent inventors faced unique challenges in implementing smartcard circuitry into a mobile phone. For example, mobile phones require a relatively small form factor, such that the antennas of traditional passive smartcards were too large. Ex. 1001 at 2:40-42; Ex. 2031 at ¶ 41. As the specification of the ’053 patent describes, prior to the ’053 patent, “[t]here ha[d] been attempts to implement passive [RFID] tags into smaller mobile devices,” such as mobile phones. Ex. 1001 at 2:40-42; Ex. 2031 at ¶ 41. But those attempts were “met with limited success due in part to the size of the loop antenna” required. *Id.* at 2:40-53; Ex. 2031 at ¶ 41.

To overcome this problem, the ’053 patent inventors created a device that modulates a received signal to communicate in a passive mode, but that does so by drawing upon an internal power source to ***actively***, rather than ***passively***, load modulate the received signal. Ex. 1001 at 9:39-42, 9:51-54, 10:59-61; Ex. 2031 at ¶ 42. By relying on an internal power source and using active load modulation, the

’053 patent device can operate with a smaller antenna than those of traditional passive smartcards. Ex. 2031 at ¶ 42.

The ’053 patent device achieves this using performance enhancement circuits arranged within the phone between the smartcard controller and the antenna. *See, e.g.*, Ex. 1001 at 15:56-60; Ex. 2031 at ¶ 43. The performance enhancement circuits include an amplifier and load modulation circuitry, as shown for example in Figures 21 and 25, below. Ex. 1001 at 17:25-40, 17:65-18:7; Ex. 2031 at ¶ 43.

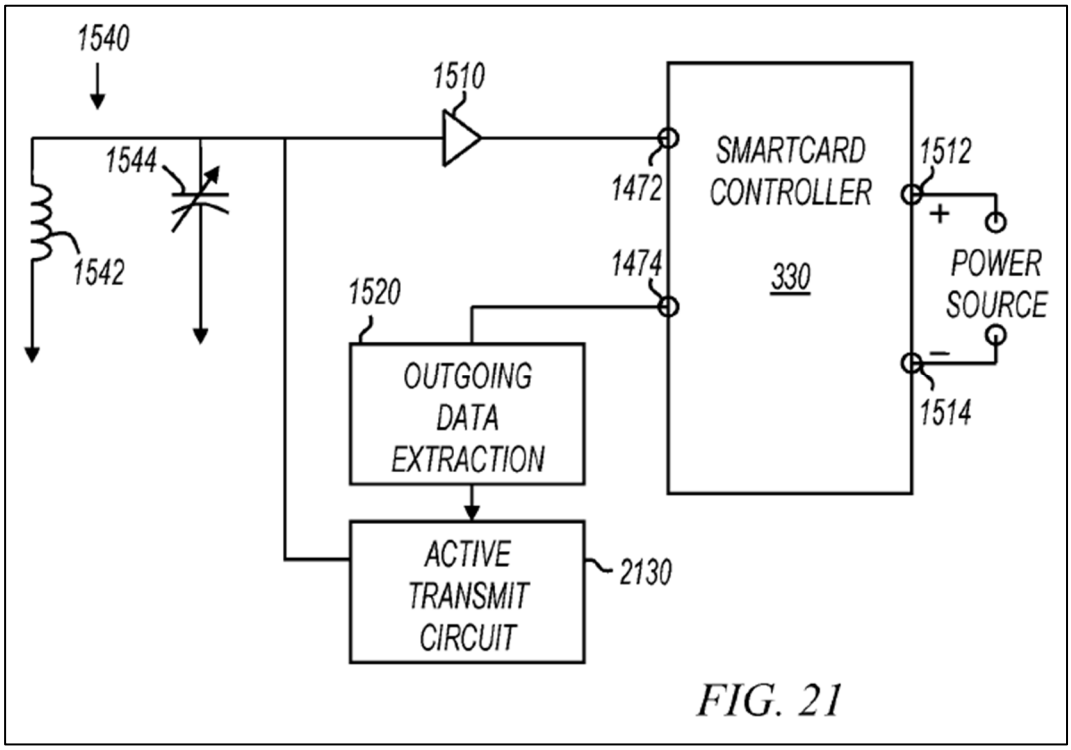

Ex. 1001, Fig. 21; Ex. 2031 at ¶ 43.

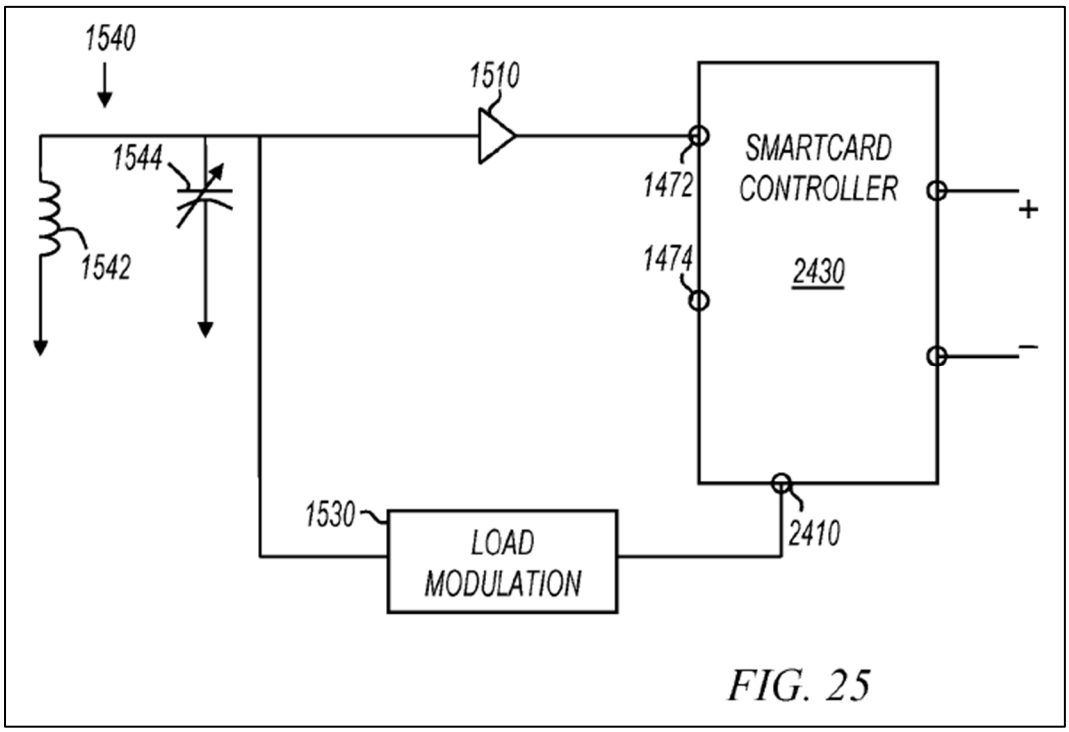

Ex. 1001, Fig. 25; Ex. 2031 at ¶ 43.

The amplifier, such as amplifier 1510 shown above in Figure 25, "amplifies the voltage received at antenna 1542, and the amplified voltage is provided to the smartcard controller." Ex. 1001 at 15:66-16:1; Ex. 2031 at ¶ 44. The amplifier thereby "increases the maximum distance at which the RFID card can operate while receiving data." Ex. 1001 at 16:1-2; Ex. 2031 at ¶ 44. Performance enhancement circuits also include an "active transmit driver circuit" or "active transmit circuit," as shown above in Figure 21, which includes "circuits to actively transmit a signal rather than simply load modulate tuned circuit 1540." Ex. 1001 at 17:25-33; Ex. 2031 at ¶ 45. Additionally, performance enhancement circuits include a load modulating circuit, such as load modulation driver circuit 1530

shown in Figure 25. Ex. 2031 at ¶ 46. Load modulation driver circuit 1530 "modulates the impedance of the tuned circuit 1540 to form the outgoing data path." Ex. 1001 at 16:15-18; Ex. 2031 at ¶ 46.

Load modulation may be passive or active. Ex. 2031 at ¶ 47. As the '053 patent describes, passive load modulation is "generally well known, and may be as simple as a switched transistor that adds and removes a reactive element" from the tuned circuit. Ex. 1001 at 16:35-38; Ex. 2031 at ¶ 47. However, the '053 patent further discloses an active circuit for actively transmitting data. In particular, as noted above, the '053 patent describes that performance enhancement circuits may include an active transmit driver circuit. Ex. 1001 at 17:25-30; Ex. 2031 at ¶ 47. "Active transmit driver circuit 2130 may include circuits to actively transmit a signal rather than simply load modulate" a tuned circuit. Ex. 1001 at 17:31-33; Ex. 2031 at ¶ 47. That is, rather than responding passively by modulating a received signal, the active transmit driver circuit 2130 actively generates a signal for communicating with another device. Ex. 1001 at 17:32-36; Ex. 2031 at ¶ 47.

For example, Figure 16 illustrates a waveform of an interrogating RF signal, such as a signal produced by a point-of-sale device. Ex. 2031 at ¶ 48. The waveform includes both a carrier frequency 1620 and two sidebands 1610 about the carrier frequency. Ex. 1001 at 16:20-23; Ex. 2031 at ¶ 48. The '053 patent describes that, in responding to an interrogating signal, such as that shown in

Figure 16, rather than passively load modulating the received signal or actively generating a responsive signal, the active transmit driver circuit "***form[s] a signal that mimics the sidebands*** 1610" of the interrogating frequency "***as if the interrogating RF field experienced load modulation***." Ex. 1001 at 16:22-26 (emphasis added); Ex. 2031 at ¶ 48.

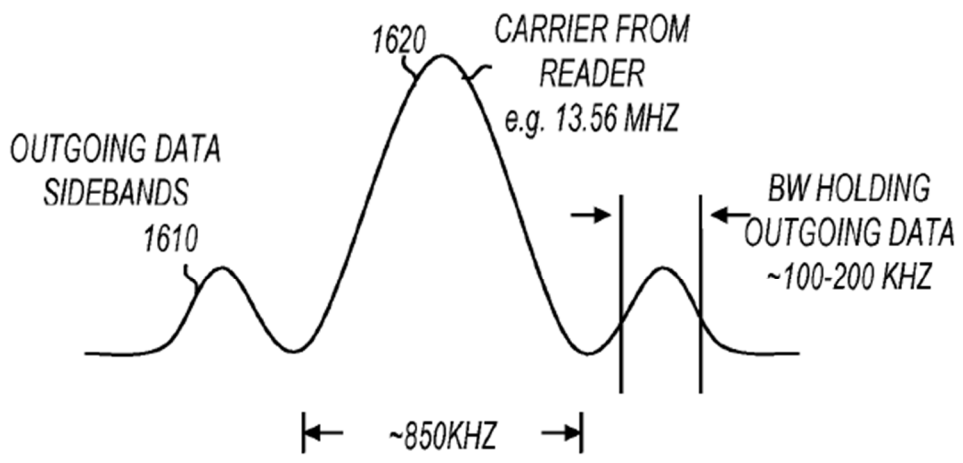

FIG. 16

Ex. 1001, Fig. 16. Thus, the active transmit driver circuit performs an active transmission but, by ***mimicking the sidebands of the interrogating frequency***, the transmission ***appears*** to other devices like a passive transmission. Ex. 2031 at ¶ 49. By mimicking the sidebands and appearing to operate as a passive smartcard, the claimed mobile device of the '053 patent could readily interface with then-existing smartcard reader infrastructure, such as point-of-sale devices. *Id.*

The ’053 patent further describes that the smartcard controller and performance enhancement circuits draw power directly from the device’s own power source. Ex. 1001 at 9:39-42, 9:51-54, 10:59-61. By relying on an internal power source, the smartcard controller and performance enhancement circuits can operate without requiring a conventionally large loop antenna that would otherwise be needed to build a high enough charge to power the components. Ex. 1001 at 9:39-42, 9:51-54, 10:59-61; Ex. 2031 at ¶ 50. And thus, the circuitry can be provided in a small enough form factor for use in a mobile phone. Ex. 1001 at 9:65-10:4; Ex. 2031 at ¶ 50; *see also* Ex. 1001 at 17:37-40 (“Active transmission can make use of power available on the RFID card and can further increase the usable distance when smartcard controller 330 is transmitting.”).

III. PRIORITY DATE OF THE ’053 PATENT

Patent Owner does not waive any argument regarding the priority date to which the claims are entitled. Pet. at 13-15. Patent Owner further reserves the right to later advance additional arguments.

IV. CLAIM CONSTRUCTION

Petitioners do not request construction of any claim terms from the ’053 patent. Pet. at 14. No claims of the ’053 patent require express construction to deny institution. Therefore the claims should be given their ordinary and customary meaning in light of the specification and prosecution history, as understood by a

person of ordinary skill in the art. 37 C.F.R. § 100(b); *Phillips v. AWH Corp.*, 415 F.3d 1303 (Fed. Cir. 2005).

V. PERSON OF ORDINARY SKILL IN THE ART

For the purposes of these preliminary proceedings, Patent Owner does not dispute the level of skill for a person of ordinary skill in the art ("POSITA"), other than Petitioner's assertion that a POSITA must have specific experience in "smartcards and contactless communications" rather than electronic devices more generally. Pet. at 21-22. But Patent Owner does not waive any argument regarding the proper level of skill.

VI. THE PETITION DOES NOT ESTABLISH A REASONABLE LIKELIHOOD THAT THE APPLIED REFERENCES RENDER THE CHALLENGED CLAIMS UNPATENTABLE

The Petition does not establish a reasonable likelihood that Bangs alone (Ground 1), or in combination with Kerdraon (Ground 2) or Koh (Ground 3), discloses all of the limitations of any '053 patent claim, or that a POSITA would be motivated to combine the references.

The Petition also fails to establish a reasonable likelihood that Bangs in combination with Fisher (Ground 4), Bangs in combination with Kerdraon and Fisher (Ground 5), or Bangs in combination with Koh and Fisher (Ground 6), discloses all of the limitations of claims 2-4 and 19-20 of the '053 patent, or that a POSITA would be motivated to combine the references.

The Board should not institute trial on any Ground.

A. The Petition Does Not Establish a Reasonable Likelihood that Bangs With or Without Skill in the Art Renders Unpatentable Claims 1-8 and 17-20 (Ground 1)

The Petition has not demonstrated a reasonable likelihood of success that Petitioners will prevail on any claim challenged in Ground 1 for the reasons described in detail below.

1. Overview of Bangs

Petitioners primarily rely on U.S. Patent Application Publication 2010/0112941 to Bangs et al., dated May 6, 2010 and entitled "NFC Communicators." (Ex. 1004, "Bangs"). Unlike the '053 patent claims, Bangs does not seek to incorporate smartcard circuitry into a mobile phone for use with existing smartcard infrastructure. Ex. 2031 at ¶ 55. Indeed, Bangs does not disclose a smartcard at all. *See infra*. Rather, Bangs provides for systems to reduce the voltage that NFC circuitry experiences from an interrogating RF field. Ex. 1004, Abstract; Ex. 2031 at ¶ 55.

Bangs is directed to an antenna circuit for an NFC communicator that "reduce[s] the voltage to which circuitry of the NFC communicator is subjected by a received RF H field." Ex. 1004 at Abstract; Ex. 2031 at ¶ 55. As Bangs explains, NFC communicators are vulnerable to unpredictable and excess voltage

fluctuations that can be caused by a number of variables. Ex. 1004 at [0012]-[0014]; Ex. 2031 at ¶ 55.

For example, an NFC communicator may communicate with a variety of devices that "will almost certainly have different antenna spatial envelopes, different dimensions, shapes, footprints or sizes (form factors)," all of which will affect the RF fields produced by those devices and thus the voltage experienced by the receiving NFC communicator. Ex. 1004 at [0013]; Ex. 2031 at ¶ 56. "[S]ize or environmental constraints," which limit the "size and/or topology of the antenna circuit," may in turn affect the voltage developed across the NFC communicator's antenna circuit during communication. Ex. 1004 at [0015]; Ex. 2031 at ¶ 56. Even items that the user of an NFC communicator is wearing or carrying may influence the voltage experienced by the communicator. Ex. 1004 at [0013]; Ex. 2031 at ¶ 56. There is simply "no way of accurately predicting the electromagnetic influences in the environment or environments within which the NFC communicator will operate or how those electromagnetic influences may change with time." Ex. 1004 at [0013]; Ex. 2031 at ¶ 56. Therefore, Bangs seeks to protect NFC functionality "from over-voltage resulting from received high strength RF H fields." Ex. 1004 at [0090]; *see also id.* at [0014], [0015]; Ex. 2031 at ¶ 56.

Bangs addresses this problem by providing an improved antenna circuit arranged between the antenna and NFC circuitry of an NFC communicator. Ex.

1004 at Abstract, Figs. 3-6; Ex. 2031 at ¶ 57. In particular, Bangs incorporates first and second capacitors into the antenna circuit "to reduce the voltage to which circuitry of the NFC communicator is subjected by a received RF H field." Ex. 1004 at Abstract, [0057]-[0065], Fig. 3; Ex. 2031 at ¶ 57. Bangs also discloses reducing voltage on the NFC communicator circuitry by coupling receive circuitry of the NFC communicator to "only a portion of the antenna coil." Ex. 1004 at Abstract, [0078]-[0080], Fig. 5; Ex. 2031 at ¶ 57.

2. The Petition Does Not Establish that Bangs Discloses All Limitations of the Challenged Claims

a. Claim 1

i. Bangs alone or in combination with skill in the art does not disclose "a smartcard controller."

The Petition has not established a reasonable likelihood that Bangs alone or in combination with skill in the art discloses "a smartcard controller." *See* Pet. at 31-33. Indeed, Bangs does not disclose smartcard functionality, does not contemplate any ability to effectuate secure transactions, and does not provide any teaching that a smartcard controller could be implemented into the circuitry of Bangs.

The Petition asserts that "controller 107" of the Bangs "NFC communicator" is a "smartcard controller." Pet. at 30. This bare assertion is based on controller 107's control over the NFC communicator, which operates in accordance with

standards such as ISO/IEC 14443. *Id.* at 31 (citing Ex. 1004 (Bangs) at [0051], [0052], [0005]). The Petition states, "[f]or example, Bangs discloses that 'controller 107 is coupled to the data store 108 which is provided to store data (information and/or control data) to be transmitted from and/or data received by the NFC communications enabled device,' and that '[s]ome areas of application are payment systems, ticketing systems,' etc." *Id.* (citing Ex. 1004 at [0051], [0005]-[0006]; Ex. 1003 (Tentzeris), ¶¶ 77-79) (Petitioners' alterations).

The Petition asserts that controller 107 satisfies the "smartcard controller" limitation based on how Petitioners suggest the "smartcard controller" term is used in the '053 patent. Specifically, the Petition states, "The use of a controller that supports the ISO 14443 standard is consistent with the '053 specification and prosecution of the related '722 patent." *Id.* at 31 n.5 (citing Ex. 1001 ('053) at 9:25-27). The Petition references a portion of the '053 specification describing smartcard controllers, emphasized below, within the broader context of the '053 patent's discussion of smartcard controllers:

> Smartcard controller 330 is a dual interface smartcard controller with one of the interfaces including RFID functionality. In some embodiments, smartcard controller 330 is compatible with passive RFID tag readers in NFC applications. For example, ***smartcard controller 330 may be a device capable of***

> ***implementing all or part of the ISO 14443 standard for contactless NFC devices***. Also, for example, smartcard controller 330 may be a dual interface smartcard controller capable of implementing both ISO 7816 and ISO 14443 standards for contact/contactless requirements. The "SmartMX" family of controllers available from NXP Semiconductors N.V. of The Netherlands are examples of suitable dual interface smartcard controllers.

Ex. 1001 at 9:21-33 (emphasis added); Pet. at 31 n.5.

The language emphasized above and cited in the Petition does not support the Petition's argument that controller 107, which is an ***NFC controller***, is a smartcard controller. Ex. 2031 at ¶ 62. In the cited portion of the '053 specification, the patent is describing the characteristics of a smartcard controller—among them, support for ISO 14443. Ex. 2031 at ¶ 62; Ex. 1001 at 9:25-27. But even if a "smartcard controller 330 may be a device capable of implementing all or part of the ISO 14443 standard for contactless NFC devices," Ex. 1001 at 9:25-27, that does not mean that ***any device*** implementing the ISO 14443 standard is a smartcard controller. Ex. 2031 at ¶ 62. In other words, based on the discussion in the '053 specification, having ISO 14443 capability is a necessary but not a sufficient condition for a device being a smartcard controller. Ex. 2031 at ¶ 62.

Contrary to the assertions in the Petition, a POSITA would understand that not every controller operating with contactless communication protocols is a "smartcard controller." *Id.* at ¶ 63. NFC is merely a short-range wireless communication technology for exchanging data between two peer devices or an NFC tag (a subset of RFID tags) and a reader. *Id.* It is built on top of ISO 14443 as a protocol. *Id.* Thus, NFC is just another wireless protocol, like WiFi, to exchange data, which is exactly the use described within Bangs. Ex 1004 at [0040]; Ex. 2031 at ¶ 63. Use of such protocols does not imply smartcard-specific functionality. Ex. 2031 at ¶ 63.

The '053 patent identifies specific examples of smartcard controllers, i.e., "the 'SmartMX' controllers sold by NXP Semiconductors N.V. of Eindhoven, The Netherlands." Ex. 1001 at 3:7-9; 9:30-33 ("The 'SmartMX' family of controllers available from NXP Semiconductors N.V. of The Netherlands are examples of suitable dual interface smartcard controllers."). A POSITA would have understood that a "smartcard controller," generally and as described in the '053 specification, comprises ***smartcard functionality***—and more than just communications functionality, like NFC. Ex. 2031 at ¶ 64.

Consistent with the discussion of smartcard controllers in the '053 specification, a POSITA would understand that a smartcard controller, such as SmartMX smartcard controllers as described in the specification of the '053 patent,

include functionality in accordance with certain smartcard standards in existence at the time of the invention. Ex. 2031 at ¶ 65. At the time of the inventions claimed in the ’053 patent, smartcard standards such as ISO 7816, GlobalPlatform, and JavaCard governed the use and manufacture of smartcards. *Id.*

The ’053 patent makes frequent reference to ISO 7816—an international standard identifying uniform physical characteristics, electrical interfaces, transmission protocols, security comments, and other specifics for smartcards, specified across 15 parts of the standard. *See, e.g.*, Ex. 2031 at ¶ 66; Ex. 1001 at 9:27-30 (“smartcard controller 330 may be a dual interface smartcard controller capable of implementing both ISO 7816 and ISO 14443 standards for contact/contactless requirements”); 5:59-61(“Electrical contacts 122 may also be compliant with a smartcard ‘contact’ interface (e.g., ISO 7816)”.); 6:54-56 (“Mobile computing device 110 may also communicate with RFID card 120 using a ISO 7816 compatible interface or the like.”). Smartcard standards like ISO 7816 set specifications for secure transaction execution, secure key storage, or EMV-style applet processing. Ex. 2031 at ¶ 67. Smartcard functionalities include, e.g., a secure element providing the capabilities to securely store and process sensitive data that is considered tamper proof. *Id.*

The Petition fails to establish that the controller disclosed by Bangs is a “smartcard controller.” Indeed, a POSITA would understand that the controller

disclosed by Bangs is not a smartcard controller for the reasons discussed above. Ex. 2031 at ¶ 68. Bangs does not disclose that its controller 107 is capable of performing any ***smartcard*** functionality, such as secure transaction execution, secure key storage, or EMV-style applet processing. *Id*. It is not, for example, ISO 7816 compliant. *Id.* A POSITA would understand that smartcard controllers include a secure element for securely processing and storing sensitive data in accordance with certain smartcard standards in existence at the time of the invention. Ex. 2031 at ¶ 68; *see also* Ex. 2032 (*P5CN072 Secure Dual Interface PKI Smart Card Controller – Short Form Specification*, Rev. 1.0 (Mar. 9, 2005) ("P5CN072 Specification") at 8 (showing secure element, i.e., Secure_MX51 CPU).

Nor does Bangs provide any indication that its controller 107 meets any ***smartcard*** specification. Bangs only identifies the controller 107 as operating in accordance with RF communications standards, which are simply contactless communication protocols. Ex. 1004 at [0005] ("Examples of near field RF communicators are defined in various standards for example ISO/IEC 18092, ISO/IEC 14443, ISO/IEC 15693[,] ISO/IEC 21481. Examples of NFC communicators can be found in ISO/IEC 18092 and ISO/IEC 21481 in particular."), [0052] (describing compatibility with these standards).

The Petition also points to an examiner's rejection in the prosecution history of a related patent, U.S. Pat. No. 9,483,722, to argue that Bangs's controller 107 is a "smartcard controller." *See* Pet. at 31 n.5; Ex. 1003 at ¶ 80 (citing Ex. 1011 at 1696, 1579, 1655, 1716). During prosecution of the '722 patent, in rejecting the pending claims, the examiner appears to have pointed to a prior art controller that was not a smartcard controller. Ex. 1011 at 1696, 1579. The Applicant did not agree with the examiner's characterization. Rather, the Applicant amended the claims in response to the rejection without commenting on the examiner's characterization of the prior art controllers. *Id.* at 1655, 1716. This prosecution history does nothing to further Petitioners' argument that any controller constitutes a smartcard controller. *Astra Aktiebolag v. Andrx Pharms., Inc.*, 222 F. Supp. 2d 423, 578 (S.D.N.Y. 2002), *aff'd sub nom. In re Omeprazole Pat. Litig.*, 84 F. App'x 76 (Fed. Cir. 2003) (declining to interpret a patentee's silence on a reference's prior art status as an admission that the reference constituted prior art).

Finally, the Petition asserts that "at a minimum," a POSITA "would have found it obvious to implement controller 107 as a smartcard controller to advantageously provide smartcard functionality in Bangs' mobile telephone without needing to carry a separate smartcard device." Pet. at 31 (citing Ex. 1003 (Tentzeris), ¶¶ 80-83). This assertion is completely unsupported as it relates to how Bangs's controller 107 would be implemented as a smartcard controller. As

discussed in Section VI.B.2, below, the technical challenges of implementing a smartcard controller into Bangs's system are significant, and the Petition fails to address those technical challenges in any way.

The Petition therefore has not established a reasonable likelihood that Bangs alone or in combination with skill in the art discloses every limitation of claim 1.

b. Claims 2-8

The Petition has not established a reasonable likelihood that Bangs alone or in combination with skill in the art discloses every limitation of independent claim 1. Claims 2-8 are dependent claims that depend from claim 1 (claim 8 depends from claim 7, which depends from claim 1). Ex. 1001 at 20:22-35. Because Bangs does not disclose claim 1, it cannot disclose the more specific claims 2-8. *See, e.g.*, *Ortho-McNeil Pharm., Inc. v. Mylan Lab'ys, Inc.*, 520 F.3d 1358, 1365 (Fed. Cir. 2008) ("[D]ependent claims are nonobvious if the independent claims from which they depend are nonobvious." (quoting *In re Fritch*, 972 F.2d 1260, 1266 (Fed. Cir. 1992)). The Petition therefore has not established a reasonable likelihood that Bangs alone or in combination with skill in the art discloses every limitation of claims 2-8, which depend from independent claim 1.

c. Claim 17

i. Bangs lacks the same elements of claim 17 as related to claim 1

Independent claim 17 contains the same "smartcard controller" limitation as claim 1, discussed above. *See* Ex. 1001 at 21:15. Therefore, for the same reasons described in Section VI.A.2.a.i, which is incorporated herein by reference, Bangs alone or in combination with skill in the art does not disclose claim 17.

d. Claims 18-20

The Petition has not established a reasonable likelihood that Bangs alone or in combination with skill in the art discloses every limitation of independent claim 17. Claims 18-20 are dependent claims that depend from claim 17. Ex. 1001 at 19:22-34. Because Bangs does not disclose claim 17, it cannot disclose the more specific claims 18-20. *See, e.g.*, *Ortho-McNeil Pharm., Inc. v. Mylan Lab'ys, Inc.*, 520 F.3d 1358, 1365 (Fed. Cir. 2008) ("[D]ependent claims are nonobvious if the independent claims from which they depend are nonobvious." (quoting *In re Fritch*, 972 F.2d 1260, 1266 (Fed. Cir. 1992)). The Petition therefore has not established a reasonable likelihood that Bangs alone or in combination with skill in the art discloses every limitation of claims 18-20, which depend from independent claim 17.

B. The Petition Does Not Establish a Reasonable Likelihood that Bangs in View of Kerdraon Renders Unpatentable Claims 1-8 and 17-20 (Ground 2)

The Petition has not demonstrated a reasonable likelihood of success that Petitioner will prevail on any claim challenged in Ground 2 for reasons described in detail below. Ground 2—Bangs in view of Kerdraon—does nothing to remedy the shortcomings of Ground 1.

1. Overview of Kerdraon

U.S. Patent Publication No. 2009/0215489 to Kerdraon et al. (Ex. 1006 or "Kerdraon") is entitled "Method and Device for Managing Applications of a Mobile Terminal." Kerdraon was published August 27, 2009, and the PCT application to which Kerdraon claims priority was published February 26, 2009. To the extent Kerdraon qualifies as prior art at all,[1] the Petition fails to demonstrate that one of ordinary skill in the art would have been motivated to combine

[1] The Petition contends the claims of the '053 patent are not entitled to a 2008 priority date. *See* Pet. at 15-16. For purposes of this Patent Owner Preliminary Response, Patent Owner addresses the asserted references, including Kerdraon, as though all asserted references qualify as prior art to the '053 patent. Patent Owner reserves the right to assert an earlier priority date at a later stage of this proceeding.

Kerdraon with Bangs and would have had an expectation of success in doing so, as discussed below.

Kerdraon relates to methods and systems for managing applications stored on a mobile terminal, such as a mobile phone. Ex. 1006 at Abstract, [0002], [0007]; Ex. 2031 at ¶ 72. Kerdraon discloses a system containing a "Smart MX card component 33," an NFC module 29, and an antenna 31. Ex. 1006 at [0038], [0069], [0070], Fig. 4; Ex. 2031 at ¶ 72. The Petition relies on Kerdraon for its disclosure of a smartcard controller. Pet. at 60-66 (citing, e.g., Ex. 1006 at [0070]-[0071]). But Kerdraon provides no disclosure regarding smartcard controller communications. Ex. 2031 at ¶ 72. Kerdraon does not disclose, or even relate to, effectuating contactless payments by implementing a smartcard controller in a phone to interface with existing point-of-sale infrastructure. *Id.*

2. The Petition Does Not Establish that a POSITA Would Have Either a Reason to Combine Bangs and Kerdraon or an Expectation of Success from the Combination

To support an obviousness challenge, "[t]he petitioner must . . . articulate specific reasoning, based on evidence of record, to support the legal conclusion of obviousness." *In re Magnum Oil Tools Int'l, Ltd.*, 829 F.3d 1364, 1380 (Fed. Cir. 2016). The petitioner must demonstrate both that a POSITA (1) would have had a reason to combine the asserted references, and (2) would have had a reasonable expectation of success from doing so. *Honeywell Int'l Inc. v. Mexichem Amanco*

Holding S.A. DE C.V., 865 F.3d 1348, 1355 (Fed. Cir. 2017) (quoting *Redline Detection, LLC v. Star Envirotech, Inc.*, 811 F.3d 435, 449 (Fed. Cir. 2015)).

Here, Petitioners cannot articulate any basis for combining Bangs with Kerdraon. The Petition asserts that "[a] POSITA would have been motivated to apply Kerdraon's smartcard controller teachings to Bangs' NFC-enabled mobile phone to advantageously provide smartcard functionality in a mobile phone and eliminate a user's need to carry a separate smartcard device." Pet. at 63. The Petition also asserts that "a POSITA would have further been motivated to include smartcard functionality into a mobile phone because it allows a user to view information about the smartcard and update information stored in the smartcard using the phone functionality." *Id.* at 64 (citing Ex. 1023, 2:21-29; Ex. 1003 (Tentzeris), ¶ 149). The Petition continues, "a POSITA would have found it straightforward and advantageous to apply Kerdraon's smartcard controller teaching to Bangs' NFC-enabled mobile phone, and would have known such a combination (yielding the claimed limitations) would predictably work and provide the expected functionality." *Id.* at 65 (citing Ex. 1003 (Tentzeris), ¶ 150).

But the Petition's assertions regarding motivation to combine and expectation of success are conclusory and fail to address the practical, technical aspects of combining Bangs and Kerdraon. Further, as discussed below, the

Petition fails to discuss how the combination of Bangs and Kerdraon would actually function as it relates to the challenged '053 claims. *See* Section VI.B.3.

At the most basic level, combining Bangs with Kerdraon would entail integrating two discrete components, i.e., Bangs's NFC controller, i.e., controller 107, with Kerdraon's "smart card controller," i.e., "Smart MX card component 33." Ex. 2031 at ¶ 74. A POSITA would recognize that integrating these two components would not be a simple exercise. *Id.* A POSITA would also recognize that integrating the two discrete components would result in a system with particular characteristics. *Id.* Practically, a POSITA would recognize that, e.g., the SmartMX controller of Kerdraon, integrated with an NFC controller, would use a standard interface such as NFC-WI/S^{2}C for NFC transmission. *Id.*

As a real-world example, technical documentation for an example NXP NFC controller, the PN532, indicates that "[a] complete secure card functionality is only possible in combination with a secure IC using the NFC-WI/S^{2}C interface," as shown below. Ex. 2031 at ¶ 75.

> In card emulation mode, the CIU is able to answer to a Reader/Writer command either according to the FeliCa or ISO/IEC 14443A/MIFARE card interface scheme. The CIU generates the load modulation signals, either from its transmitter or from the LOADMOD pin driving an external active circuit. A complete secure card functionality is only possible in combination with a secure IC using the NFC-WI/S^{2}C interface.

Ex. 2033 (*PN532/C1 Near Field Communication (NFC) controller – Product short data sheet*, Rev. 3.2 (Sept. 20, 2012) ("PN532 Data Sheet") at 6 (emphasis added).

Consistent with the NFC-WI/S^2C interface identified in documentation for the NXP PN532 NFC controller, the NXP SmartMX smartcard controller, would also use the NFC-WI /S^2C interface. Ex. 2031 at ¶ 76. As a real-world example, technical documentation for an example NXP smartcard controller from the time period, the P5CN072 SmartMX smartcard controller, indicates that the SmartMX smartcard controller can be integrated with a compatible NFC IC (e.g., the PN532); such a configuration would use the S^2C interface unit, as shown below. Ex. 2031 at ¶ 76.

2.1 Product Specific Features

- 72 Kbytes EEPROM (including 192 bytes reserved manufacturer/security area)
- 160 Kbytes User ROM
- 4608 bytes RAM
  - 256 bytes + 3 Kbytes CXRAM
  - 1280 bytes FXRAM usable for Fame*XE*
- **Memory Management and Protection Unit** (MMU)
  - for more details see 2.2. Security Features
- S^2C Interface Unit
  - compatible with ISO/IEC14443A-3 via a NFC IC
  - fully supports the T=CL protocol acc. ISO/IEC14443-4
  - Data Transfer rates supported (106 Kbit/s)

Ex. 2032 (P5CN072 Specification) at 1 (emphasis added).

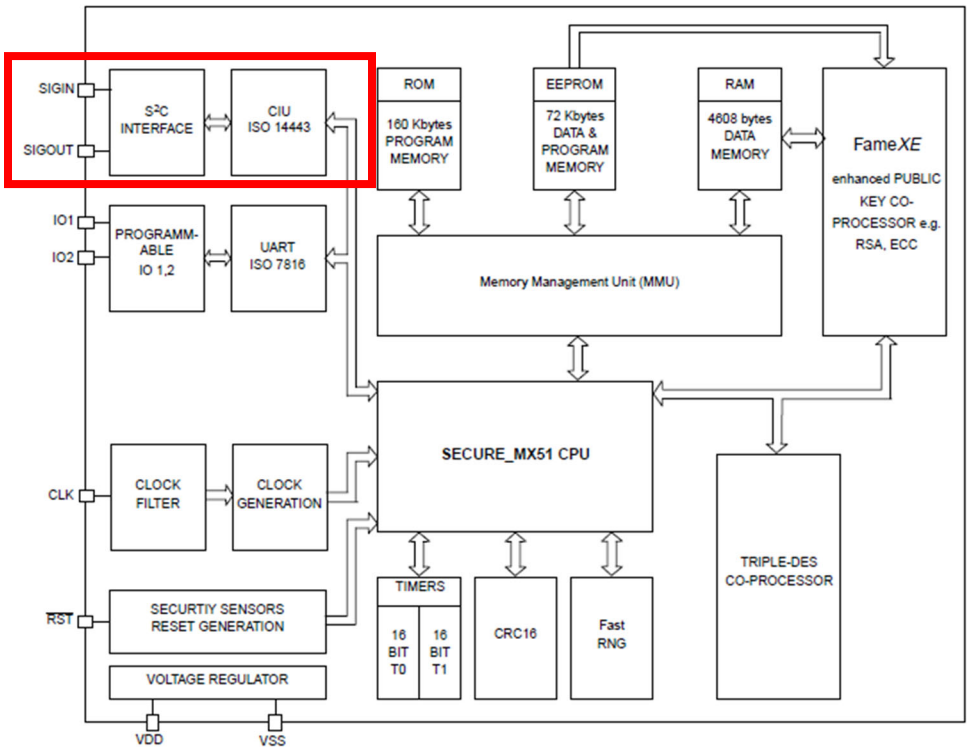

Fig 2. Block diagram and pinning information P5CN072.

Ex. 2032 (P5CN072 Specification) at 8 (annotations added).

As these examples illustrate, and as a POSITA would recognize, smartcard controllers such as the SmartMX controllers disclosed in the '053 patent, as well as Kerdraon (*see* Ex. 1006 at [0070]-[0071]), would use, e.g., the NFC-WI/S^{2}C interface. Ex. 2031 at ¶ 77. A POSITA would also recognize that use of the NFC-WI/S^{2}C interface to integrate the NFC controller and the SmartMX smartcard controller would result in a device with a ***passive interface***, and that would communicate with an NFC transceiver via the NFC-WI standard, which is a passive mode, as discussed below. *Id*. Specifically, as discussed below, and as

disclosed in NXP documentation, when a smartcard controller is interfaced to an NFC transceiver device, for compatibility and security reasons, the resulting communication is entirely passive. *Id.* It would thus not involve any performance enhancing circuits as disclosed in the ’053 patent, as discussed below. *Id.*

For example, Philips/NXP documentation regarding the PN532 NFC controller demonstrates this passive communication. Ex. 2031 at ¶ 78. When the PN532 NFC controller solution is used to support secure smartcard capabilities through a device such as a SmartMX smartcard controller, through the integration described above, it must do so over the NFC-WI/S^2C interface (i.e., SIGIN and SIGOUT) and use the LOADMOD pin to drive the external circuit. *Id.*

> In card emulation mode, the CIU is able to answer to a Reader/Writer command either according to the FeliCa or ISO/IEC 14443A/MIFARE card interface scheme. The CIU generates the load modulation signals, either from its transmitter or from the LOADMOD pin driving an external active circuit. A complete secure card functionality is only possible in combination with a secure IC using the NFC-WI/S^2C interface.

Ex. 2033 (PN532 Data Sheet) at 6 (emphasis added); Ex. 2031 at ¶ 78.

The interface and operations based on the S^2C interface and LOADMOD described in the PN532 Data Sheet do not use the circuits and functionality disclosed in the challenged claims of the ’053 patent, including at least the “amplifier” and “active transmit driver circuit” limitations. Ex. 2031 at ¶ 79. As illustrated below, the use of SIGIN, SIGOUT, and LOADMOD renders the

transmit drivers (TX1, TX2) and amplifiers (I-channel Amplifier, Q-channel Amplifier) unused.

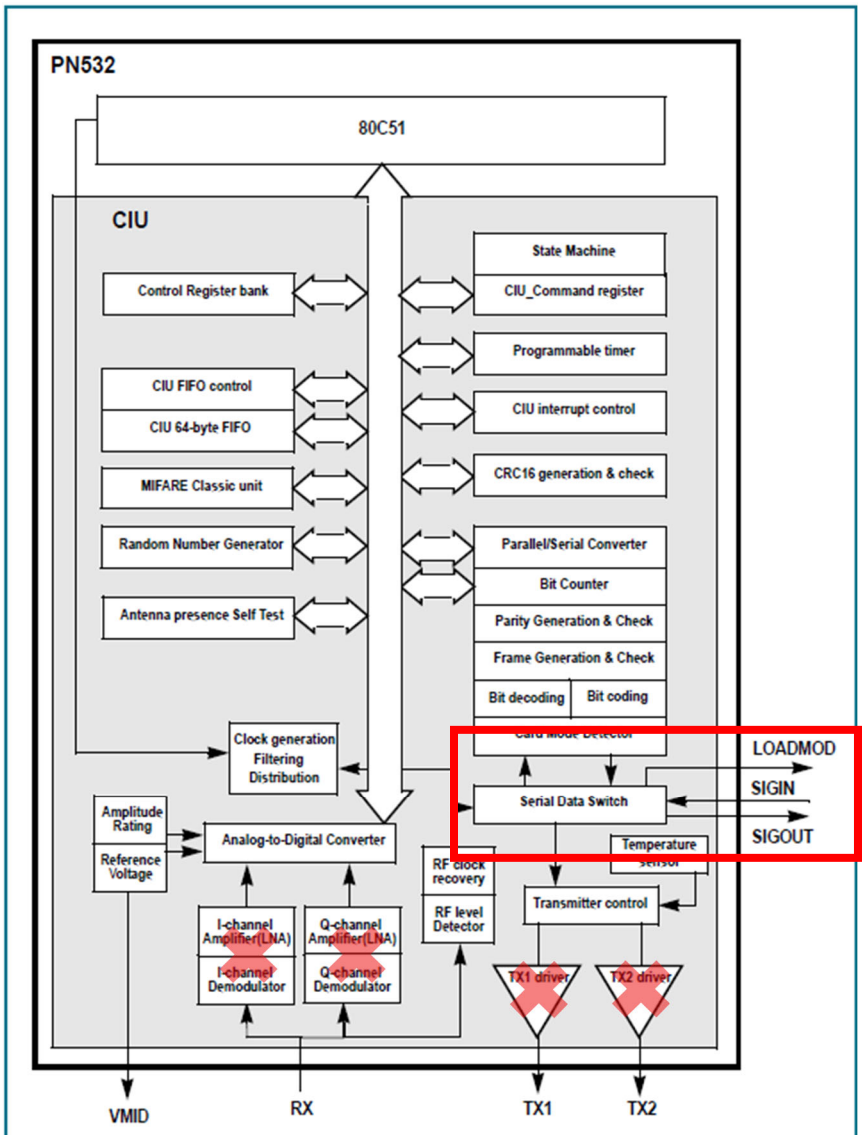

Fig 12. CIU detailed block diagram

Ex. 2033 (PN532 Data Sheet) at 19 (annotations added).

Because these limitations of the combined system would have been apparent to a POSITA, a POSITA would not have been motivated to combine Bangs and

Kerdraon. Neither the Petition nor Dr. Tentzeris addresses any of these readily apparent technical issues with combining Bangs's NFC controller with a smartcard controller like Kerdraon's. Instead, the Petition sets forth a number of purported reasons why it would be beneficial for Bangs to include a smartcard controller. *See* Pet. at 63-65. But the Petition does not begin to explain how Kerdraon's smartcard controller could be integrated into Bangs's system, with Bangs's controller 107.

For the reasons set forth above, it would not have been obvious to a POSITA to combine a smartcard controller, like that of Kerdraon, with Bangs.

3. The Petition Fails to Demonstrate that Bangs in combination with Kerdraon discloses "active transmit driver" and "amplifier" limitations.

Even if Bangs and Kerdraon were to be combined, as discussed above in Section VI.B.2, the Petition fails to demonstrate that the combination of Bangs and Kerdraon discloses certain limitations of the challenged claims of the '053 patent. As discussed above in Section VI.B.2, the Bangs NFC controller, i.e., "controller 107" and the Kerdraon Smart MX smartcard controller, would interface with an NFC transmitter via the NFC-WI/S^2C interface (SIGIN and SIGOUT). Because of this necessary interface, i.e., the use of SIGIN, SIGOUT, and LOADMOD, the transmit drivers (TX1, TX2) and amplifiers (I-channel Amplifier, Q-channel Amplifier) would be rendered unused. Ex. 2031 at ¶ 79. Thus, the combined system of Bangs and Kerdraon does not disclose '053 limitations "active transmit

driver circuit" and "amplifier." *See* Ex. 1001 at 20:18-20 (claim 1), 20:30-32 (claim 6), 20:33-35 (claim 7), 21:15-24 (claim 17), 21:26-27 (claim 18).

C. The Petition Does Not Establish a Reasonable Likelihood that Bangs in View of Koh Renders Unpatentable Claims 1-8 and 17-20 (Ground 3)

The Petition has not demonstrated a reasonable likelihood of success that Petitioners will prevail on any claim challenged in Ground 3 for the described below and discussed above regarding the asserted combination of Bangs and Kerdraon (Ground 2). Ground 3—Bangs in view of Koh—does nothing to remedy the shortcomings of Ground 1.

1. Overview of Koh

U.S. Patent Publication No. 2008/0073426 to Koh et al. (Ex. 1007 or "Koh") is entitled "Method and apparatus for Providing Electronic Purse." Koh was published March 27, 2008. The Petition fails to demonstrate that one of ordinary skill in the art would have been motivated to combine Koh with Bangs and would have had an expectation of success in doing so, as discussed below.

Koh discloses "a mechanism provided to devices, especially portable devices, functioning as an electronic purse (e-purse) to be able to conduct transactions over an open network with a payment server without compromising security." Ex. 1007 at [0007]; Ex. 2031 at ¶ 84. Koh further discloses "a near field

communication (NFC) enabled cellphone that includes a Smart MX (SMX) module." Ex. 1007 at [0033]; Ex. 2031 at ¶ 84.

2. The Petition Does Not Establish that a POSITA Would Have Either a Reason to Combine Bangs and Koh or an Expectation of Success from the Combination

To support an obviousness challenge, "[t]he petitioner must . . . articulate specific reasoning, based on evidence of record, to support the legal conclusion of obviousness." *In re Magnum Oil Tools Int'l, Ltd.*, 829 F.3d 1364, 1380 (Fed. Cir. 2016). The petitioner must demonstrate both that a POSITA (1) would have had a reason to combine the asserted references, and (2) would have had a reasonable expectation of success from doing so. *Honeywell Int'l Inc. v. Mexichem Amanco Holding S.A. DE C.V.*, 865 F.3d 1348, 1355 (Fed. Cir. 2017) (quoting *Redline Detection, LLC v. Star Envirotech, Inc.*, 811 F.3d 435, 449 (Fed. Cir. 2015)).

The Petition asserts that "Koh's SmartMX module, which is described as a 'smart card module,' is a smartcard controller." Pet. at 66. The Petition further asserts that "it would have been straightforward to apply Koh's smartcard controller teachings to Bangs's mobile device." *Id.* at 69. Specifically, the Petition asserts "a POSITA would have found it straightforward and advantageous to apply Koh's smartcard controller teachings to Bangs' NFC-enabled mobile phone and would have known such a combination (yielding the claimed limitations) would predictably work and provide the expected functionality." *Id.* at 70.

Because the combination of Bangs and Koh would entail the same combination of a SmartMX smartcard controller into Bangs's system as is discussed above regarding Kerdraon, the same analysis applies to the combination of Bangs and Koh. Ex. 2031 at ¶ 85. Section VI.B.3 is incorporated herein by reference.

For the reasons set forth above, it would not have been obvious to a POSITA to combine a smartcard controller, like that of Koh, with Bangs.

3. The Petition Fails to Demonstrate that Bangs in combination with Koh discloses "active transmit driver" and "amplifier" limitations.

Even if Bangs and Koh were to be combined, as discussed above in Section IV.C.2, the Petition fails to demonstrate that the combination of Bangs and Koh discloses certain limitations of the challenged claims of the '053 patent. As discussed above in Section IV.B.2, the Bangs NFC controller, i.e., "controller 107" and the Kerdraon Smart MX smartcard controller (and the corresponding Smart MX smartcard controller in Koh), would interface with an NFC transmitter via the NFC-WI/S^2C interface (SIGIN and SIGOUT). Because of this necessary interface, i.e., the use of SIGIN, SIGOUT, and LOADMOD, the transmit drivers (TX1, TX2) and amplifiers (I-channel Amplifier, Q-channel Amplifier) would be rendered unused. Ex. 2031 at ¶¶ 79, 85. Thus, for the same reasons discussed above regarding Bangs and Kerdraon, the combined system of Bangs and Koh does not

disclose ’053 limitations “active transmit driver circuit” and “amplifier.” *See* Ex. 1001 at 20:18-20 (claim 1), 20:30-32 (claim 6), 20:33-35 (claim 7), 21:15-24 (claim 17), 21:26-27 (claim 18).

D. The Petition Does Not Establish a Reasonable Likelihood that Bangs in View of Fisher Renders Unpatentable Claims 2-4, 19-20 (Ground 4)

The Petition has not demonstrated a reasonable likelihood of success that Petitioner will prevail on challenged claims 2-4 and 19-20 in Ground 4. Ground 4 fails for the same reasons as Ground 1, discussed above.

Ground 4 asserts that Fisher supplies limitations of dependent claims 2-4 (which depend from claim 1) and dependent claims 19-20 (which depend from claim 17). As discussed above in Ground 1, Bangs does not disclose the “smartcard controller” limitation of claims 1 and 17. Specifically, the Petition does not assert that Fisher supplies a “smartcard controller.” *See* Pet. at 71-75.

Thus, even as combined, the combination of Bangs and Fisher does not disclose the “smartcard controller” limitations of claims 1 and 17, discussed above regarding Ground 1.

E. The Petition Does Not Establish a Reasonable Likelihood that Bangs in View of Kerdraon and Fisher Renders Unpatentable Claims 2-4, 19-20 (Ground 5)

The Petition has not demonstrated a reasonable likelihood of success that Petitioner will prevail on challenged claims 2-4 and 19-20 in Ground 5. Ground 5 fails for the same reasons as Ground 2, discussed above.

Ground 5 asserts that Fisher supplies limitations of dependent claims 2-4 (which depend from claim 1) and dependent claims 19-20 (which depend from claim 17). As discussed above in Ground 1, Bangs does not disclose the "smartcard controller" limitation of claims 1 and 17, and it would not have been obvious to a POSITA to combine a smartcard controller, like that of Kerdraon, with Bangs, nor would the combination satisfy all limitations of claims 1 and 17. The Petition does not assert that Fisher supplies a "smartcard controller" or any other limitation that would address the shortcomings of Grounds 1 and 2, discussed above. *See* Pet. at 71-75.

Thus, even as combined, the combination of Bangs, Kerdraon, and Fisher does not render unpatentable claims 2-4 and 19-20.

F. The Petition Does Not Establish a Reasonable Likelihood that Bangs in View of Koh and Fisher Renders Unpatentable Claims 2-4, 19-20 (Ground 6)

The Petition has not demonstrated a reasonable likelihood of success that Petitioner will prevail on challenged claims 2-4 and 19-20 in Ground 6. Ground 6 fails for the same reasons as Ground 3, discussed above.

Ground 6 asserts that Fisher supplies limitations of dependent claims 2-4 (which depend from claim 1) and dependent claims 19-20 (which depend from claim 17). As discussed above in Ground 1, Bangs does not disclose the "smartcard controller" limitation of claims 1 and 17, and it would not have been obvious to a POSITA to combine a smartcard controller, like that of Koh, with Bangs, nor would the combination satisfy all limitations of claims 1 and 17. The Petition does not assert that Fisher supplies a "smartcard controller" or any other limitation that would address the shortcomings of Grounds 1 and 3, discussed above. *See* Pet. at 71-75.

Thus, even as combined, the combination of Bangs, Koh, and Fisher does not render unpatentable claims 2-4 and 19-20.

VII. PATENT OWNER DOES NOT WAIVE ARGUMENTS ABOUT OBJECTIVE INDICIA OF NON-OBVIOUSNESS

For the foregoing reasons, Petitioners have failed to establish a reasonable likelihood that any challenged claim is unpatentable, and institution should be

denied on the basis of those reasons alone. Patent Owner acknowledges that Petitioners have attempted to rebut arguments regarding secondary considerations, also known as objective indicia of nonobviousness. *See* Pet. at 75-76. Patent Owner does not waive its rights to address objective indicia of nonobviousness later in these proceedings.

VIII. CONCLUSION

The Petition does not establish a reasonable likelihood that any of the challenged claims is unpatentable. Institution should be denied.

Dated: July 17, 2025

Respectfully Submitted,

/Cyrus A. Morton/

Cyrus A. Morton
(Reg. No. 44,954)
CMorton@RobinsKaplan.com
Lead Counsel
Jessica L. Gutierrez
(Reg. No. 75,094)
JGutierrez@RobinsKaplan.com
Back-Up Counsel
Robins Kaplan LLP
800 LaSalle Avenue, Suite 2800
Minneapolis, MN 55402
Phone: 612-349-8500
Fax: 612-339-4181

Attorneys for Patent Owner

WORD-COUNT CERTIFICATE

The undersigned certifies that the foregoing Patent Owner's Preliminary Response complies with the type-volume limitation of 37 C.F.R. § 42.24(a) and (b) and contains 7,673 words in 14-point Times New Roman font as calculated by the word count feature of Microsoft Office. This word count is inclusive of all text and footnotes but does not include the table of contents, table of authorities, certificates or service or word count, or appendix of exhibits or claim listing.

Dated: July 17, 2025

/Cyrus A. Morton/

Cyrus A. Morton
(Registration No. 44,954)
CMorton@RobinsKaplan.com
Robins Kaplan LLP
800 LaSalle Avenue, Suite 2800
Minneapolis, MN 55402
Phone: 612-349-8500
Fax: 612-339-4181

Attorneys for Patent Owner

CERTIFICATE OF SERVICE

The undersigned certifies that the foregoing Patent Owner's Preliminary Response was served on July 17, 2025, by electronic mail to Petitioners' counsel at the following addresses indicated in Petitioners' Mandatory Notices:

James L. Davis, Jr.
james.l.davis@ropesgray.com

Alexander E. Middleton
alexander.middleton@ropesgray.com

Frances Zhang
frances.zhang@ropesgray.com

Samsung-iCashe-IPR-Ropes@ropesgray.com

Dated: July 17, 2025

/Cyrus A. Morton/

Cyrus A. Morton
(Registration No. 44,954)
CMorton@RobinsKaplan.com
Robins Kaplan LLP
800 LaSalle Avenue, Suite 2800
Minneapolis, MN 55402
Phone: 612-349-8500
Fax: 612-339-4181

Attorneys for Patent Owner