MAGNETIC STRIPE READER

Relevant Devices

This application note applies to the following devices:
C8051F330

1. Introduction

Magnetic stripe readers (MSRs) are widely used in many different applications such as point-of-sale terminals and key card readers. The C8051F330 is capable of integrating MSR functionality in a very small space with few external components. The high-speed, high-resolution ADC, coupled with a fast controller core makes this integration possible. This design demonstrates a two-channel MSR function using the on-chip ADC to read information directly from the magnetic read head. Output can be viewed using a PC's terminal program via an RS-232 connection.

2. MSR Background

There are a number of different formats used for encoding information on magnetic stripes, and many different types of card readers available. This design demonstrates a swipe-type reader that reads Track 1 and Track 2 of cards encoded using the ISO/IEC-7811 standard. A firmware example for reading Track 1, 2, and 3 is also provided.

2.1. Encoding

The encoding format used by the ISO/IEC-7811 standard is known as "F2F" or "Aiken Biphase" encoding. The F2F encoding format allows the serial data to be self-clocking. Bits are encoded serially on the magnetic stripe using a series of magnetic flux transitions. Each bit of data on a track has a fixed physical length on the magnetic stripe. Flux transitions are located at the edge of each bit, and also in the center of each "1" bit. As the stripe passes the magnetic read head, the flux transitions on the stripe are converted into a series of alternating positive and negative pulses, as shown in Figure 1. After determining which flux transitions represent the edges of a bit, ones and zeros can be differentiated by the presence or absence of a pulse in the center of the bit.

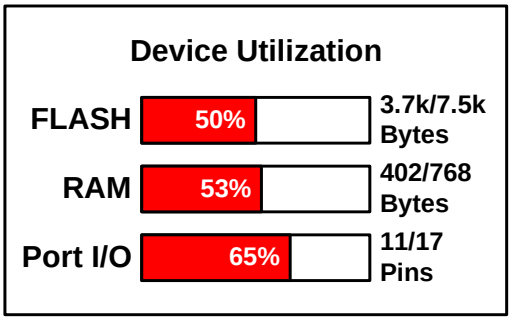

2.2. Data Format

The data format specified by ISO/IEC-7811 encodes 7-bit (6 bits + parity) characters on Track 1, and 5-bit (4 bits + parity) decimal characters on Track 2. Track 3 may contain 7-bit or 5-bit encoding, depending on the card. Characters are written to the stripe LSB-first, with the parity bit written last. All tracks contain leading and trailing zeros at the ends of the stripe to aid the clock recovery process. When read in the forward direction, a typical track contains information in the following order:

1. Clocking zeros
2. A start sentinel character
3. Data characters
4. An end sentinel character
5. A longitudinal redundancy check character
6. Clocking zeros

A number of error-checking features are included to ensure accurate reads of the stripe information:

- The Start Sentinel (SS) and End Sentinel (ES) characters are unique characters which signal the beginning and the end of the data encoded on the stripe. The SS and ES characters are not allowed as part of the data segment.
- A Longitudinal Redundancy Check (LRC) character is included after the ES. The LRC is the result of an XOR operation on all characters in the track (including the SS and ES, but not the LRC character itself).

Copyright © 2008 by Silicon Laboratories

Patent Owner's Ex. 2032
Samsung v. iCashe (IPR2025-00645)
Page 001

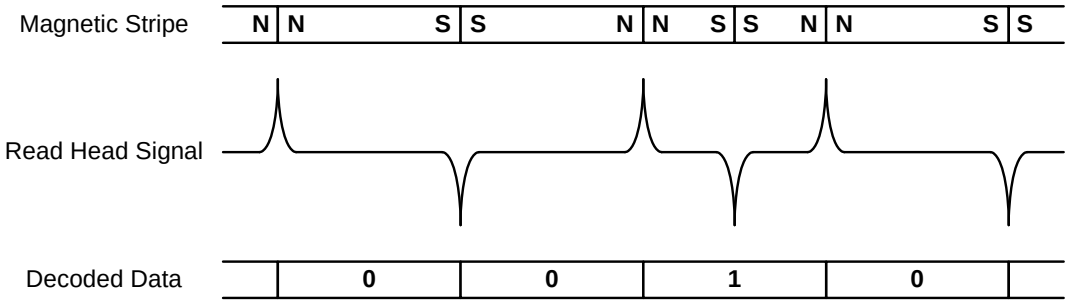

Figure 1. Magnetic Stripe Encoding

- All characters, including the SS, ES, and LRC, include a parity bit. Odd parity is used, meaning that the number of “1” bits in each character is odd when the parity bit is included.

3. Hardware

The schematic and layout for this design can be found in "Appendix A—Schematic," on page 8 and "Appendix B—Layout," on page 10, respectively. The design includes circuitry for the core MSR function, as well as power supply and RS-232 components. Although the reference design uses a two-track reader, there are provisions for connecting a reader with three tracks.

3.1. Power Supply

Power can be supplied to the board using a 9 V dc adaptor connected to the 2.1 x 5.5 mm center-positive jack provided (P1). Power for the board circuitry is derived using a 3.3 V LDO regulator.

3.2. Analog Inputs

The magnetic read heads are each connected directly to one of the C8051F330’s differential ADC input channels. The magnetic head signals are filtered with a small capacitor, and biased to the ground plane. No additional components are necessary.

3.3. Voltage Reference

Signal levels from the magnetic read heads can be as little as a few millivolts. The on-chip voltage reference is used in this design. To enhance the signal detection capabilities of the device, the voltage reference for the 10-bit ADC can be set as low as 1 V. There are placeholders on the schematic and layout for resistors which will divide the 3.3 V supply down to 1 V.

3.4. RS-232 Circuitry

An RS-232 transceiver is included on-board for data output purposes. The board can be connected directly to a PC’s COM port using an RS-232 serial cable. Data is transferred at 115.2 kbps using 8 data bits, no Parity bit, and one Stop bit (8-N-1).

4. Software

The firmware listings can be found in "Appendix E—Firmware Listing For 2-Channel Example," on page 15 and "Appendix F—Firmware Listing For 3-Channel Example," on page 44. The provided firmware has been developed using the Keil “C” compiler and the Silicon Labs IDE. The two-track solution is described in detail in the following sections. The three-track firmware example is identical from an algorithmic standpoint. Differences between the two versions of the firmware are listed at the end of this section.

The main structure of the firmware is relatively simple. After initializing the necessary device peripherals, the controller begins sampling ADC data, waiting for flux transitions at regular intervals. During the card swipe, the processor performs the F2F decoding and stores recognized bits into RAM. After a swipe has finished, the stored data is then decoded and checked for errors. Decoded data is output to the UART, and the controller waits for another card swipe.

4.1. ADC Sampling

The ADC is configured to sample at 200 ksps using Timer 2. Track 1 is sampled twice as often as Track 2, for an effective throughput of 133 ksps on Track 1 and 67 ksps on Track 2. An exponential averaging technique is applied to the data to filter the signal prior to the signal detection algorithm. Filtering increases the effective resolution of the ADC by reducing noise, and aids in the detection of smaller read head signals.

Patent Owner's Ex. 2032
Page 002

4.2. Signal Detection

Signal detection is performed by finding the minimum and maximum peaks in the filtered data that correspond to the pulse locations from the read head. See Figure 2. A moving comparison window allows local peak values to be recognized and time-stamped. The size of the comparison window is controlled by the *THRESHOLD1* and *THRESHOLD2* constants in firmware. Larger values provide more noise rejection, while smaller values allow weaker signals to be detected. The time between minimum and maximum peak values is computed and recorded after each pulse is detected. This information is used to synchronize with the bit stream and to discern between ones and zeros.

4.3. Synchronization

To synchronize with the stream of clocking zeros, it is initially assumed that all detected pulses are located at clock edges. During this phase of synchronization, the software detects and counts zero bits, as shown in Figure 3. Three of the pulse timing values (Tbit) are summed, and then divided by 2 and 4 to provide 150% and 75% timing thresholds, respectively. When *Z_LIMIT* (Zero Limit) consecutive timing values fall between the 75% and 150% thresholds (i.e., when the software detects *Z_LIMIT* zeros in a row), the algorithm begins to look for the first "1" in the bit stream. When a "1" is detected, the synchronization is complete. The first "1" is recorded to the data buffer and the software begins the data collection process.

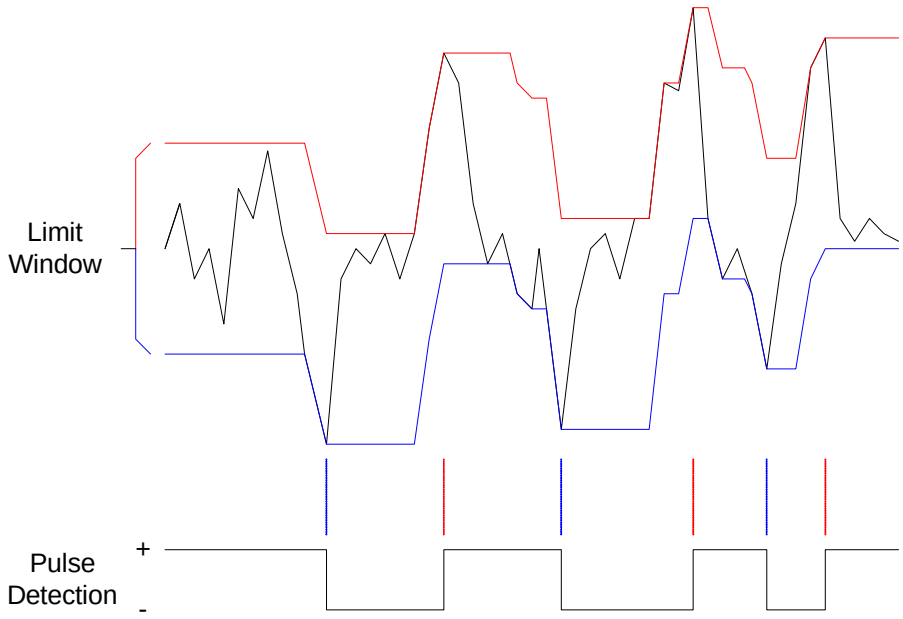

Figure 2. Signal Detection

Patent Owner's Ex. 2032
Page 003

4.4. Collecting Data

During the data collection process, the clock edge timing is continuously monitored, so that the algorithm can adapt to variations in card swipe speed. The 75% threshold is re-calculated every three pulses. At each valid pulse from the magnetic head, the timing information is compared with the 75% threshold to determine if the pulse occurred at the center or the edge of a bit. Whenever a pulse occurs at the edge of a bit, a "1" or a "0" is recorded to the data buffer for the track. A "1" is recorded to the data buffer when a pulse was detected in the center of the most recent bit (i.e., when a pulse was detected below the 75% threshold). If no pulse was detected within the bit, a "0" is recorded. When the conversion counter reaches 4096, the data collection process is halted. The raw data is then decoded and checked for errors. Figure 4 shows how the detected pulses are recorded into the data buffer.

4.5. Decoding the Raw Data

The first step in decoding the raw data is to determine which direction (forward or reverse) the card was swiped. To find the read direction, the decoding algorithm looks for a start sentinel (SS) character at the beginning and the end of the data set. If the SS is found at the beginning of the data and not found at the end of the data, the track is decoded in the forward direction. If the SS is found at the end of the data and not found at the beginning of the data, the track is decoded in the reverse direction. In the special case where the SS is found at both ends of the data set, one of these SS characters is actually the LRC. The routine then reads the next forward character in reverse, and compares it with the end sentinel (ES). If this character matches the ES, data is decoded in the reverse direction. Otherwise, data is decoded in the forward direction.

If the SS is not found at either end of the data set, the decoding algorithm looks at a character starting with the next "1" bit in both directions and repeats the process.

For data collected in the forward direction, the bits are stored in the raw collection array LSB-first. The forward decode algorithm begins at the MSB of the raw collection array and unpacks the data into bytes in the ASCII array, until all data has been unpacked.

For data collected in the reverse direction, the bits are stored in the raw collection array MSB-first. The reverse decode algorithm begins by finding the location of the last "1" bit in the raw array. Working backward through the array, the bits are copied into bytes in the ASCII array until all data has been unpacked.

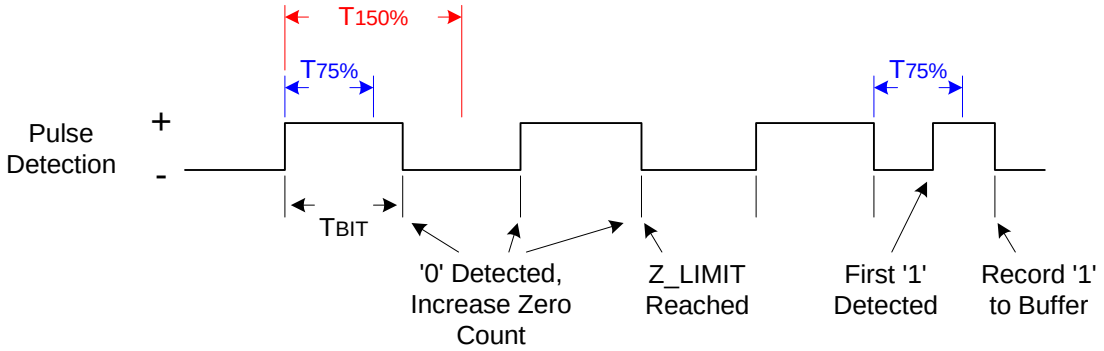

Figure 3. Synchronization with Data Stream

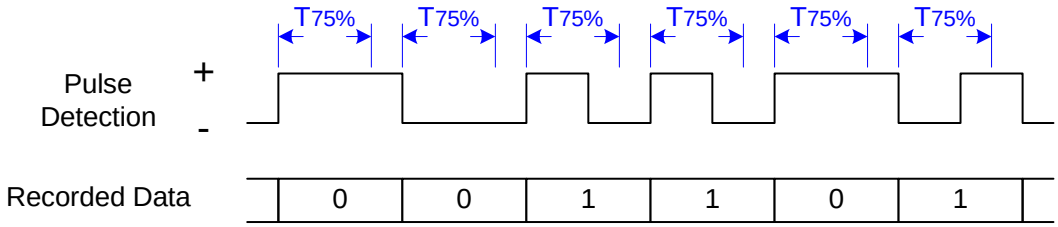

Figure 4. Recording Data

4.6. Error Checking

When data has been decoded into ASCII characters,

Patent Owner's Ex. 2032
Page 004

the firmware checks the data for three types of errors:

- **Parity Check:** Each character is checked individually to ensure that it has odd parity. The parity check sums the number of “1"s in the character’s data bits and determines if the parity bit should be a "1" or a "0" to make the sum odd. If the parity bit does not match the determined value, a parity error has occurred.
- **SS and ES Check:** Data is checked to ensure that a Start Sentinel and an End Sentinel are both present. Any data stream that does not include a SS and an ES in the correct places was not read correctly.
- **LRC Check:** As they are scanned for parity errors, each character’s data bits are XORed until the ES is reached (this check includes both the SS and ES characters). The result of the XOR function is compared with the LRC character to determine if an LRC error has occurred.

If no errors are detected, the decoded data is output, and the firmware prepares for another read.

4.7. Output

Data is output through the UART on the device at 115,200 Baud. The data format is 8 data bits, no parity bit, and 1 stop bit. The decoded data is converted to ASCII before it is sent to the UART so that it can be easily viewed. There are two different output modes defined in the software. The modes are controlled by conditional compilation using the constant *DEBUG*.

If *DEBUG* is set to "0", decoded track data will be output as shown in Figure 5. Track data is output only if no errors were detected for the track. The output will begin with the Start Sentinel character and end with the End Sentinel character followed by the LRC. The Start Sentinel for Track 1 is represented with the character “%”. For Track 2, the Start Sentinel is represented by the character “;”. The End Sentinel for both tracks is represented by the character “?”.

If *DEBUG* is set to "1", the data output appears as shown in Figure 6. In this mode, data is output for both tracks, regardless of whether an error occurred. The decoded data appears as when *DEBUG* is set to "0". The decoded data is followed by the raw data for the track. The raw data is displayed as a very long hexadecimal number. With the exception of the first byte (which is set to 0x00), the information displayed is the data that was recorded during the card swipe.

In either output mode, the dual-color LEDs (D4 and D3) will give an indication of whether any errors were detected in the collected data. D4 is used to indicate the status of Track 1, and D3 is used to indicate the status of Track 2. During a card swipe, the diode will light both red and green, to indicate a card swipe in progress. If the data collection was successful and no errors were detected, only the green LED will remain on. If errors were detected, only the red LED will remain on.

```
%B0123456789101112^SCHMOE/JOSEPH X^01020304050607080910?8
;0123456789101112=01020304050607080910?:
```

Figure 5. Example Output when DEBUG = "0"

Patent Owner's Ex. 2032
Page 005

```
Testing

DATA CH1:
%B0123456789101112^SCHMOE/JOSEPH X^01020304050607080910?8
END DATA CH1

RAW COLLECTION CH1:
0x00A28C2454B90AD469D46CC8A122C58A95F67C42EDFAA5E557ACF4838B0239F048A11284C810A8
4A811A04EA10684991427C1A00000000
END RAW CH1

DATA CH2:
;0123456789101112=01020304050607080910?:
END DATA CH2

RAW COLLECTION CH2:
0x00D0608C92ADE0A700C210458300A039090350B43C08833807EB000000
END RAW CH2

No Errors
```

Figure 6. Example Output When DEBUG = "1"

4.8. Differences Between 2-Track and 3-Track Firmware

For the most part, the two firmware examples are identical, with necessary variables and code added to handle the third track. The three-track firmware has the following notable differences from the two-track version described in the preceding sections:

- Two additional pins are used for analog input of Track 3
- Two additional pins are used to drive the dual-color LED (D1) for Track 3 status information.
- A conditional compilation constant has been added to allow the code to be compiled for either 5-bit or 7-bit encoding on the magnetic stripe. When *T3_5BIT* is cleared to "0", 7-bit encoding is used, and when *T3_5BIT* is set to "1", 5-bit encoding is used.
- Track 1 and Track 3 are sampled at an effective 80 ksps, while Track 2 is sampled at an effective 40 ksps.

Patent Owner's Ex. 2032
Page 006

5. Operational Notes

Cards can be swiped through the reader in either direction. When swiping a card it is essential that the magnetic stripe on the card makes contact with the read head, and that the card remains level as it travels through the reader, as shown in Figure 7. If the card is tilted during the swipe, information may be lost.

6. Additional Information

Additional information on magnetic stripe readers and the ISO/IEC-7811 standard can be found at the following sources:

- MagTek, *I/O Interface for TTL Magnetic Stripe Readers*, P/N 99875148, http://www.magtek.com.
- International Standards Organization, *ISO/IEC-7811*, http://www.iso.org.

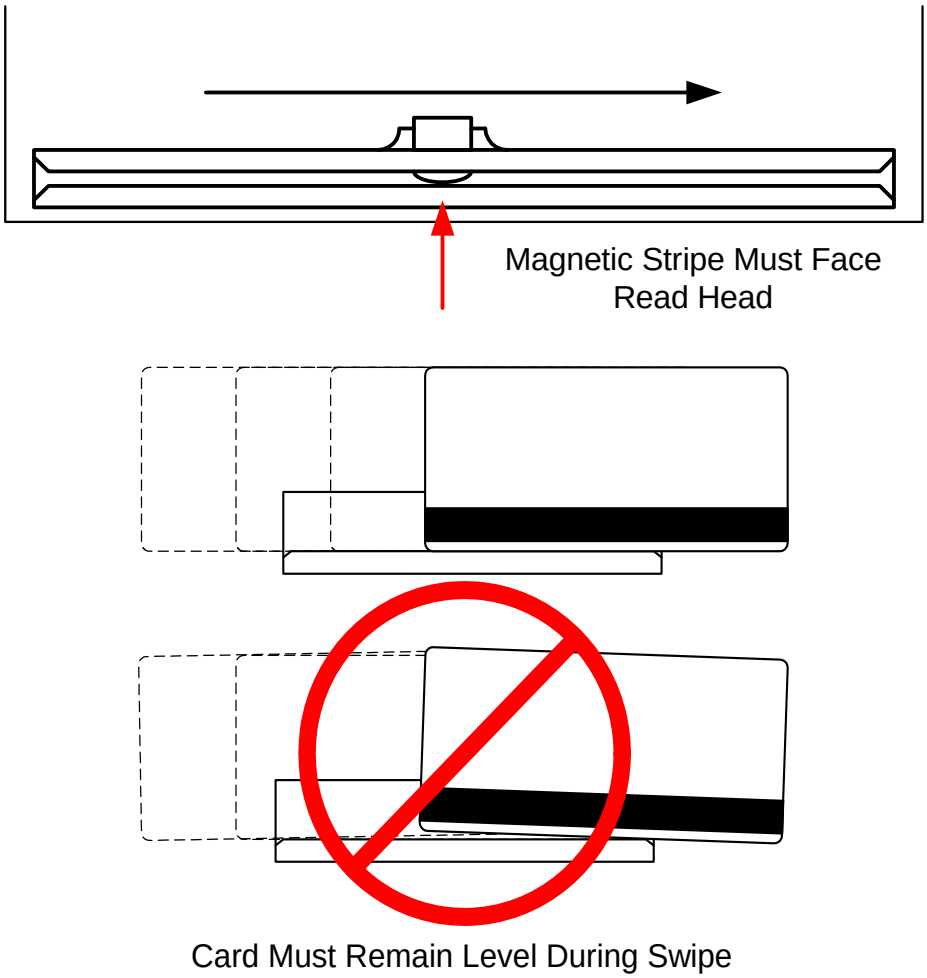

Figure 7. Swiping a Card through the Reader

Patent Owner's Ex. 2032
Page 007

APPENDIX A—SCHEMATIC

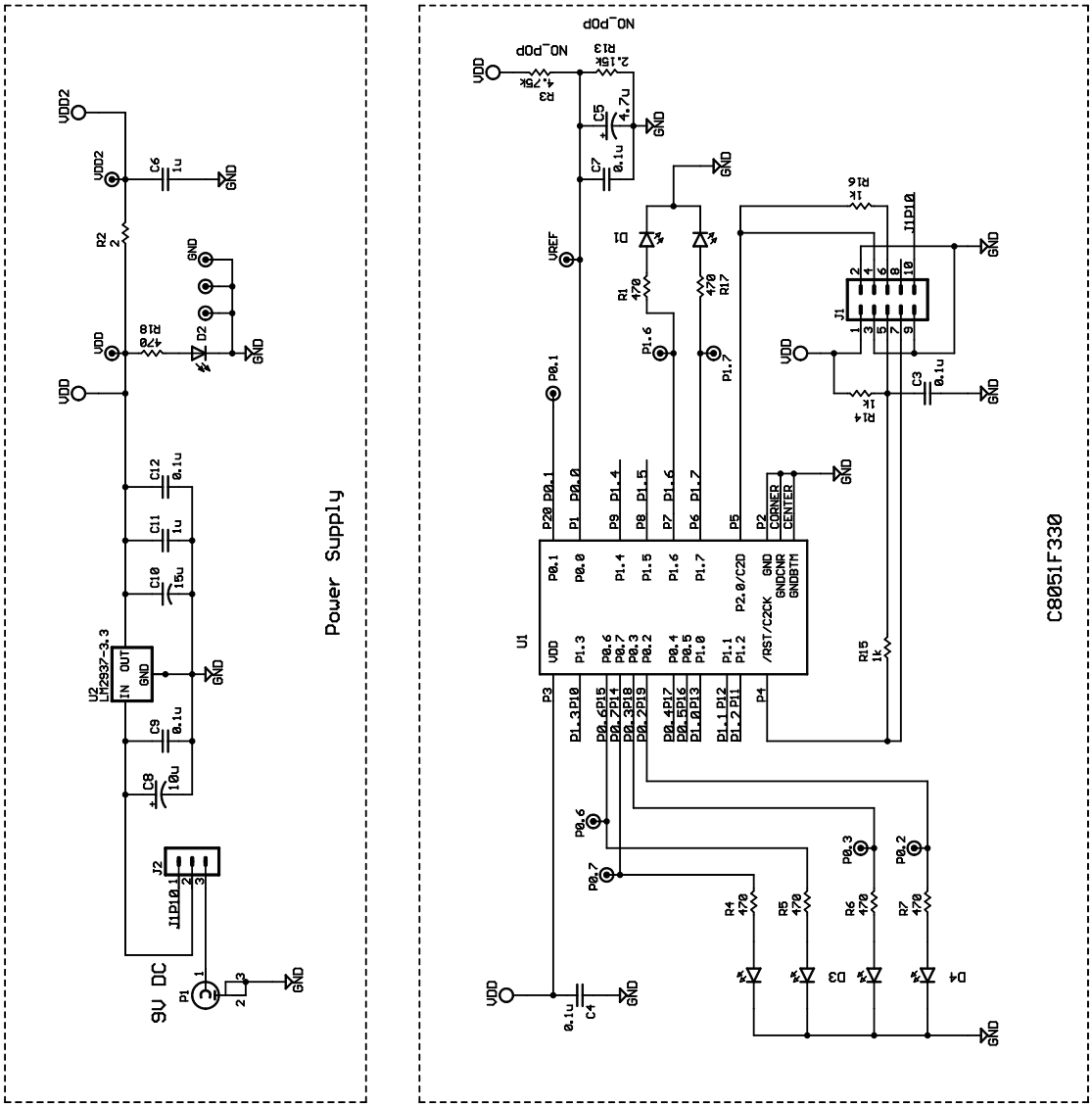

Figure 1. Schematic - Power Supply and Controller

Patent Owner's Ex. 2032
Page 008

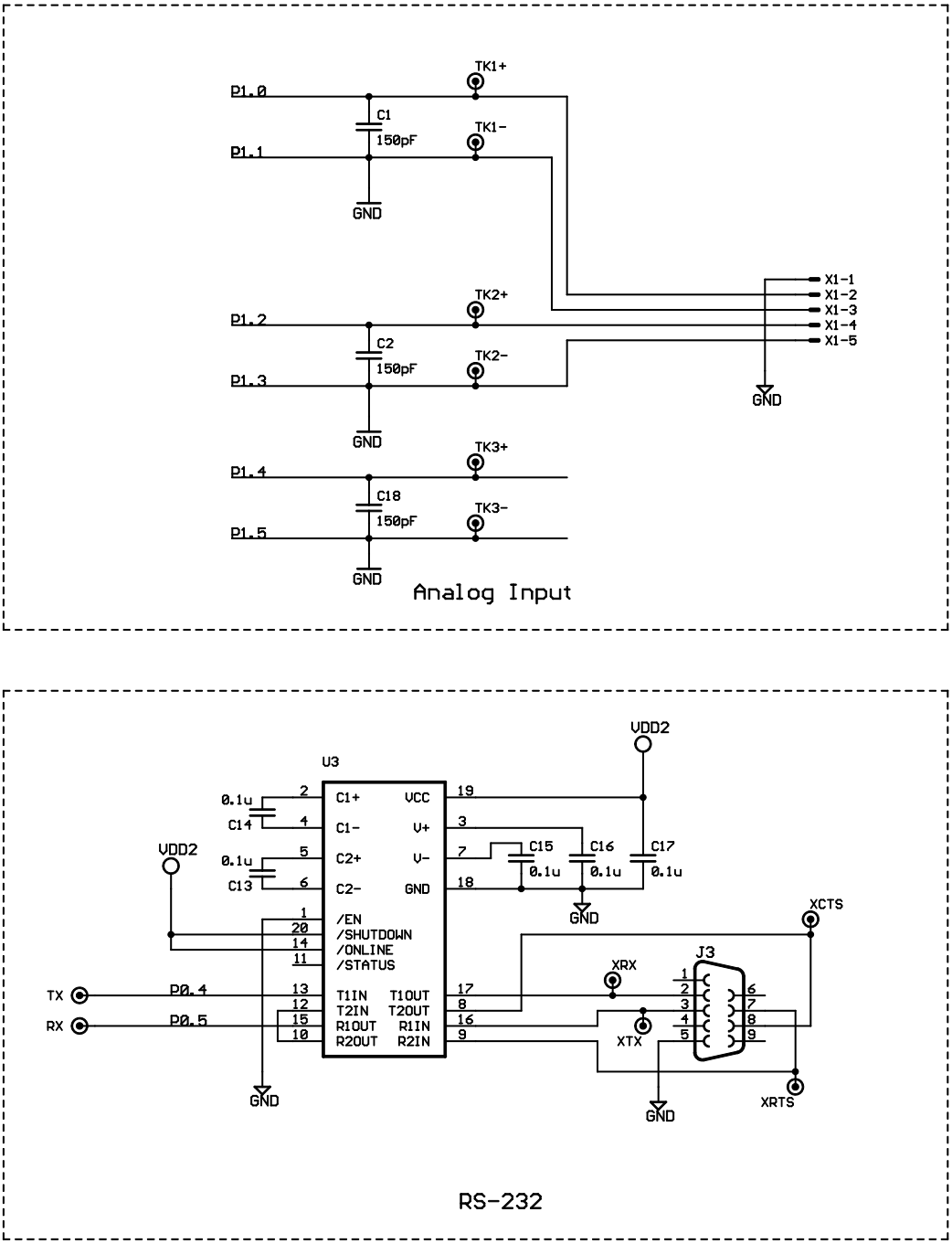

Figure 8. Schematic—Analog Input and RS-232 Output

Patent Owner's Ex. 2032
Page 009

APPENDIX B—LAYOUT

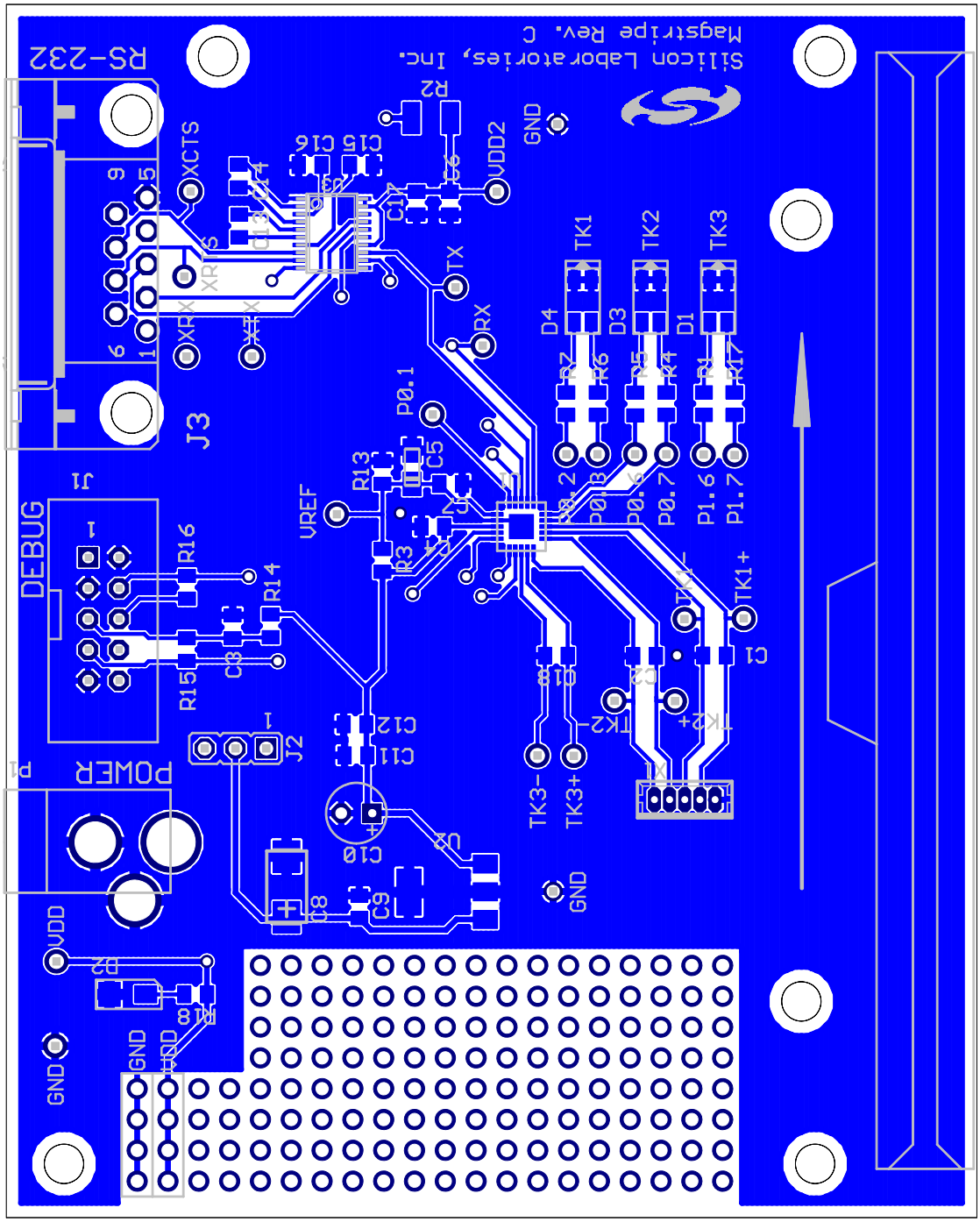

Figure 1. Top Layer (3.9375" x 3.375")

Patent Owner's Ex. 2032
Page 010

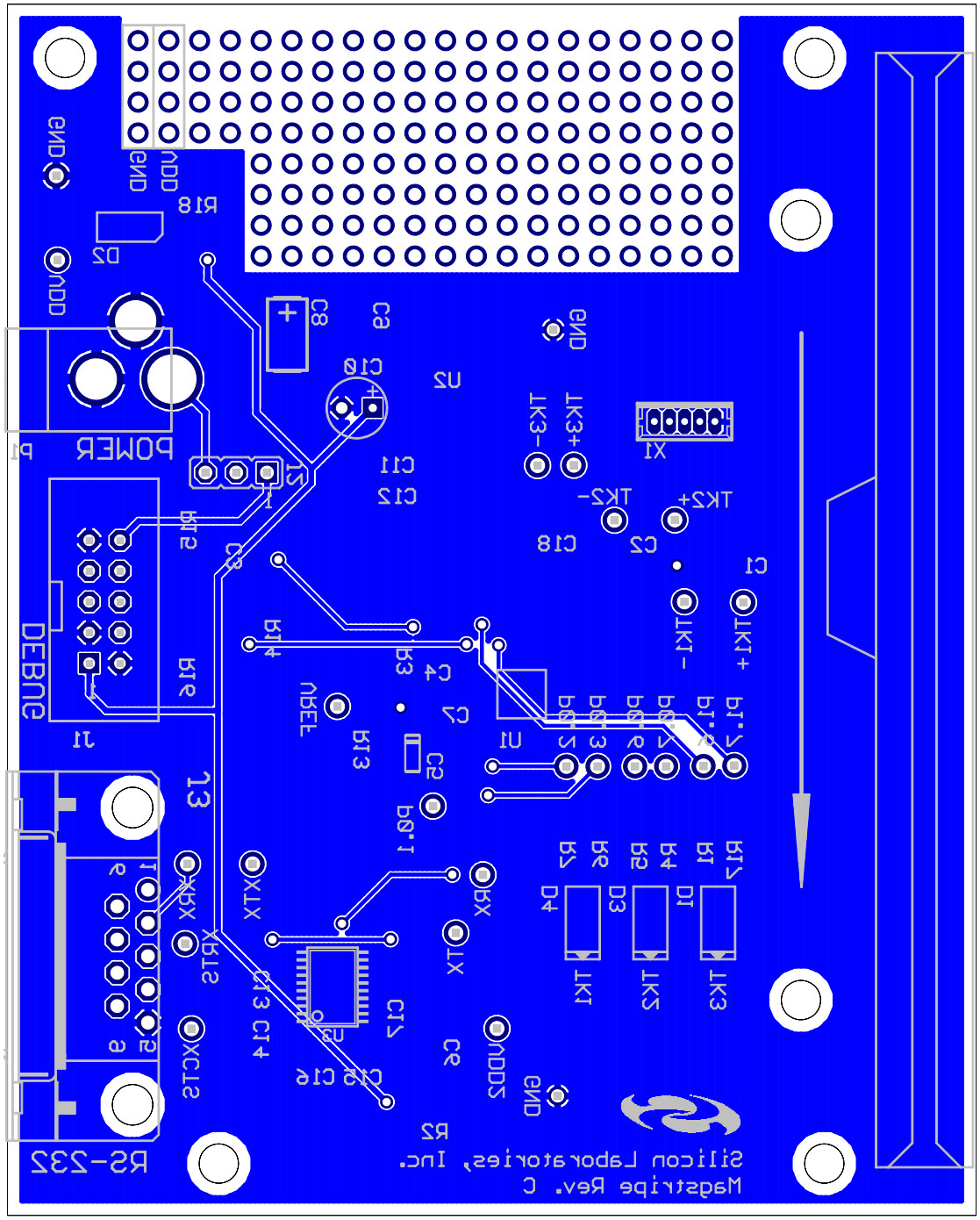

Figure 1. Bottom Layer (Mirrored, 3.9375" x 3.375")

Patent Owner's Ex. 2032
Page 011

APPENDIX C—BILL OF MATERIALS

Qty	Part	Value	Package	Manufacturer
2 (2)	C1, C2, C18†	150 pF	0805	
10 (2)	C3*, C4, C7, C9*, C12*, C13*, C14*, C15*, C16*, C17*	0.1 µF	0805	
1 (1)	C5	4.7 µF Tant. EIA Size A	3216	
2 (0)	C6*, C11*	1 µF	0805	
1 (0)	C8*	10 uµF Tant. EIA Size C	6032	
1 (0)	C10*	15 µF Tant.	Thru-Hole	
3 (0)	D1*†, D3*, D4*	SML-LX1210SRSGC		Lumex
1 (0)	D2*	LN1251C		Panasonic
1 (0)	J1*	2510-6002UB	0.1” Thru-Hole	3M
1 (0)	J2*	1x3 Header	0.1” Thru-Hole	
1 (0)	J3*	747844-6	DB9_F	AMP
1 (0)	P1*	RAPC722	2.1 x 5.5 mm	SwitchCraft
3 (0)	R1*†, R4*, R5*, R6*, R7*, R17*†, R18*	470	0805	
1 (0)	R2*	2	1210	
1 (0)	R3* (Not Populated)	4.75 kΩ	0805	
1 (0)	R13* (Not Populated)	2.15 kΩ	0805	
3 (1)	R14, R15*, R16*	1 kΩ	0805	
1 (1)	U1	C8051F330	MLP20	Silicon Labs
1 (0)	U2*	LM2913IMP-3.3	SOT223	National Semiconductor
1 (0)	U3*	SP3223	TSSOP20	Sipex
1 (1)	X1	53047-0510	1.25 mm Thru-Hole	Molex
1 (1)	Magnetic Head Assy.	21047004		Magtek

( ) Denotes quantity of components necessary for 2-channel C8051F330 MSR function.
* Denotes demonstration board components not required for C8051F330 MSR function.
† Denotes additional components used in 3-channel C8051F330 MSR function.

Patent Owner's Ex. 2032
Page 012

APPENDIX D—DEVICE UTILIZATION AND BOARD SPACE REQUIREMENTS

The device memory and peripheral requirements are shown in Table 1 and Table 2. Some peripherals such as the UART, Timer 1, and the Port I/O pins connected to the LED indicator are not essential to the MSR function, and can be used for other purposes.

Table 1. Device Resource Usage for 2-Channel Example Code

Device Resources	Used	Available
Flash Memory	Approx. 3.7 kB	Approx. 3.8 kB
RAM	402 Bytes	366 Bytes
Port I/O	11 (5 Analog, 2 UART, 4 LEDs)	6 (12 w/o UART and LEDs)
10-Bit SAR ADC	2 Differential Inputs (4 Pins)	Yes*
Timers	Timer 1 (UART), Timer 2 (ADC)	Timer 0, Timer 3
Serial Communications	UART	SMBus, SPI
10-Bit Current-Mode DAC	No	Yes
Comparator	No	Yes
3-Channel PCA	No	Yes
***Note:** The ADC can be used for other purposes when card is not being read.		

Table 2. Device Resource Usage for 3-Channel Example Code

Device Resources	Used	Available
Flash Memory	Approx. 4.7 kB	Approx. 2.8 kB
RAM	524 Bytes	244 Bytes
Port I/O	15 (7 Analog, 2 UART, 6 LEDs)	2 (10 w/o UART and LEDs)
10-Bit SAR ADC	3 Differential Inputs (6 Pins)	Yes*
Timers	Timer 1 (UART), Timer 2 (ADC)	Timer 0, Timer 3
Serial Communications	UART	SMBus, SPI
10-Bit Current-Mode DAC	No	Yes
Comparator	No	Yes
3-Channel PCA	No	Yes
***Note:** The ADC can be used for other purposes when card is not being read.		

The PCB area required for the core MSR function can be estimated by totaling the area required by each component. Table 3 shows an estimation of the area required by each component, as well as the total area required to implement the MSR function. This area estimate does not include space required for connectors or PCB traces.

Patent Owner's Ex. 2032
Page 013

Table 3. Estimated Component PCB Area

Device	Area (sq. inch)	Quantity	Total Area (sq. inch)
C8051F330 4 x 4 mm 20-pin MLP	0.025	1	0.025
4.7 µF Tantalum Capacitor on V_{REF} (3216, EIA Size A)	0.012	1	0.012
0.1 µF Capacitors for Decoupling and Bypass (0805)	0.008	2	0.016
150 pF Filtering Capacitor (0805) (1 per channel)	0.008	2 (2 Ch) 3 (3 Ch)	0.016 0.024
1 kΩ Pullup Resistor on /RST (0805)	0.008	1	0.008
Total Component Area (sq. inch) 2-Channel 3-Channel			**0.077 0.085**

Patent Owner's Ex. 2032
Page 014

APPENDIX E—FIRMWARE LISTING FOR 2-CHANNEL EXAMPLE

```
//-----------------------------------------------------------------------------
// MagStripeReaderF330_2CH.c
//-----------------------------------------------------------------------------
// Copyright 2004 Silicon Laboratories
//
// AUTH: BD
// DATE: 3 MAR 04
// VER:  2.0
//
// This program reads the magnetic stripe from a card written in the standard
// ISO 2-channel format using F2F encoding.  Read data is output to the UART
// after being decoded.
//
// Target: C8051F33x
// Tool chain: KEIL C51 7.06 / KEIL EVAL C51
//

//-----------------------------------------------------------------------------
// Includes
//-----------------------------------------------------------------------------

#include <c8051f330.h>                    // SFR declarations for C8051F330

//-----------------------------------------------------------------------------
// 16-bit SFR Definitions for 'F33x
//-----------------------------------------------------------------------------
sfr16 TMR2RL   = 0xca;                    // Timer2 reload value
sfr16 TMR2     = 0xcc;                    // Timer2 counter


//-----------------------------------------------------------------------------
// Conditional Compilation CONSTANTS
//-----------------------------------------------------------------------------

#define DEBUG        0                    // Set to '1' for extra information


//-----------------------------------------------------------------------------
// Global CONSTANTS
//-----------------------------------------------------------------------------

#define SYSCLK       24500000             // SYSCLK frequency in Hz
#define BAUDRATE     115200               // Baud rate of UART in bps
#define SAMPLE_RATE  200000               // Sample rate of ADC

#define T1_SS        0x45                 // Start Sentinel + parity
#define T1_ES        0x1F                 // End Sentinel + parity
#define T1_BITS      7                    // data + parity bit
#define T1_CHPOS     0x08                 // Positive ADC Mux channel
#define T1_CHNEG     0x09                 // Negative ADC Mux channel

#define T2_SS        0x0B                 // Start Sentinel + parity
#define T2_ES        0x1F                 // End Sentinel + parity
#define T2_BITS      5                    // data + parity bit
#define T2_CHPOS     0x0A                 // Positive ADC Mux channel
```


Patent Owner's Ex. 2032
Page 015

```
#define T2_CHNEG     0x0B                 // Negative ADC Mux channel

#define THRESHOLD1   9                    // Noise threshold limits
#define THRESHOLD2   9

#define Z_LIMIT      3                    // Number of Zeros before recording

sbit TK1_GRN_LED   = P0^2;                // GREEN LED TK1
sbit TK1_RED_LED   = P0^3;                // RED LED TK1

sbit TK2_GRN_LED   = P0^6;                // GREEN LED TK2
sbit TK2_RED_LED   = P0^7;                // RED LED TK2

// Included to set these pins to OFF - not used in 2-track design
sbit TK3_GRN_LED   = P1^6;                // GREEN LED TK3
sbit TK3_RED_LED   = P1^7;                // RED LED TK3


//-----------------------------------------------------------------------------
// Global VARIABLES
//-----------------------------------------------------------------------------

unsigned char xdata T1RAW[100], T2RAW[100];     // Track 1 and 2 Raw Data
unsigned char xdata ASCII_array[128];           // Decoded Information
unsigned char COLLECTED1 = 1, COLLECTED2 = 1;   // Raw data indices

unsigned int bdata Timeout_Counter;       // Bit-Addressable Timeout counter
sbit CLEAR_TIMEOUT = Timeout_Counter ^ 4; // Used to keep from timing out
sbit READ_TIMEOUT = Timeout_Counter ^ 5;  // Indicates when read is finished
sbit CH2_SWITCH = Timeout_Counter ^ 8;    // LSB of counter:
                                          //   If '1', CH2 is sampled
                                          //   If '0', CH2 is skipped

unsigned char bdata Temp_Byte1;           // Bit-Addressable Temporary Storage
sbit Temp1_b0 = Temp_Byte1 ^ 0;           // LSB of Temp_Byte1

unsigned char bdata Temp_Byte2;           // Bit-Addressable Temporary Storage
sbit Temp2_b0 = Temp_Byte2 ^ 0;           // LSB of Temp_Byte2

//-----------------------------------------------------------------------------
// Function PROTOTYPES
//-----------------------------------------------------------------------------

void SYSCLK_Init (void);
void ADC0_Init (void);
void UART0_Init (void);
void PORT_Init (void);
void Timer2_Init (int);

unsigned char Swipe_Card(void);

char GetDirection (unsigned char maxindex, unsigned char StartSen,
                   unsigned char EndSen, unsigned char *TrackRAW,
                   unsigned char CharBits);
char DecodeTrackForward (unsigned char maxindex, unsigned char Byte_Offset,
                   unsigned char Bit_Offset, unsigned char *TrackRAW,
                   unsigned char CharBits);

char DecodeTrackBackward (unsigned char Byte_Offset, unsigned char Bit_Offset,
```


Patent Owner's Ex. 2032
Page 016

```
                  unsigned char *TrackRAW, unsigned char CharBits);

char TrackErrorCheck (unsigned char maxindex, unsigned char StartSen,
                  unsigned char EndSen, unsigned char CharBits);

void UART_CharOut (unsigned char c);
void UART_StringOut (unsigned char *c);
void UART_HexOut (unsigned char c);


//-----------------------------------------------------------------------------
// MAIN Routine
//-----------------------------------------------------------------------------

void main (void) {

unsigned char idata Return_Code;
unsigned char idata colCount;
bit ERRT1, ERRT2;                        // Track 1, 2 Error Flags

   // Disable Watchdog timer
   PCA0MD &= ~0x40;                      // WDTE = 0 (clear watchdog timer
                                         // enable)
   PORT_Init();                          // Initialize Port I/O
   SYSCLK_Init ();                       // Initialize Oscillator

   ADC0_Init ();                         // Init ADC0
   Timer2_Init(SYSCLK/SAMPLE_RATE);      // Init Timer 2 w/ ADC sample rate
   UART0_Init();

   while (1) {

#if DEBUG
      UART_StringOut("\nTesting");
#endif   // END #if DEBUG

      UART_StringOut("\n");

      Swipe_Card();

// If DEBUG is '1', use verbose mode for output
#if DEBUG

      // Find direction of track1, and decode to character array
      Return_Code = GetDirection(COLLECTED1, T1_SS, T1_ES, T1RAW, T1_BITS);

      if ((Return_Code & 0x80) == 0)              // If no error was detected
      {
         // Check character array for SS, ES, Parity, and LRC
         Return_Code = TrackErrorCheck(Return_Code, T1_SS, T1_ES, T1_BITS);
      }

      if (Return_Code & 0x80)                     // If an error was detected
      {
         ERRT1 = 1;
         UART_StringOut("\nErrors: \n");          // List the errors detected

         if (Return_Code & 0x01)
         {
```


Patent Owner's Ex. 2032
Page 017

```
            UART_StringOut("\tStart Sentinel not found\n");
         }
         if (Return_Code & 0x02)
         {
            UART_StringOut("\tEnd Sentinel not found\n");
         }
         if (Return_Code & 0x04)
         {
            UART_StringOut("\tLRC incorrect\n");
         }
         if (Return_Code & 0x08)
         {
            UART_StringOut("\tParity error(s)\n");
         }

         UART_StringOut("\nDATA CH1:\n");
         for (colCount = 0; colCount < 128; colCount++)
         {
            UART_CharOut(0x20 + (ASCII_array[colCount]&0x3F));
            UART_CharOut(0x30);
         }
         UART_CharOut('\n');
         UART_StringOut("END DATA CH1\n");
      }
      else                                          // No errors, print T1 data
      {
         ERRT1 = 0;
         UART_StringOut("\nDATA CH1:\n");

         for (colCount = 0; colCount < Return_Code; colCount++)
         {
            UART_CharOut(0x20 + (ASCII_array[colCount]&0x3F));
            ASCII_array[colCount] = 0x30;
         }
         UART_CharOut('\n');
         UART_StringOut("END DATA CH1\n");
      }

      // Print the RAW data for Track 1
      UART_StringOut("\nRAW COLLECTION CH1:\n0x");

      for (colCount = 0; colCount < COLLECTED1; colCount++)
      {
         UART_HexOut (T1RAW[colCount]);
      }

      UART_CharOut('\n');
      UART_StringOut("END RAW CH1\n");

      // Find direction of track2, and decode to character array
      Return_Code = GetDirection(COLLECTED2, T2_SS, T2_ES, T2RAW, T2_BITS);

      if ((Return_Code & 0x80) == 0)                // If no error was detected
      {
         // Check character array for SS, ES, Parity, and LRC
         Return_Code = TrackErrorCheck(Return_Code, T2_SS, T2_ES, T2_BITS);
      }

      if (Return_Code & 0x80)                       // If an error was detected
```


Patent Owner's Ex. 2032
Page 018

```
{
   ERRT2 = 1;
   UART_StringOut("\nErrors: \n");           // List the errors detected

   if (Return_Code & 0x01)
   {
      UART_StringOut("\tStart Sentinel not found\n");
   }
   if (Return_Code & 0x02)
   {
      UART_StringOut("\tEnd Sentinel not found\n");
   }
   if (Return_Code & 0x04)
   {
      UART_StringOut("\tLRC incorrect\n");
   }
   if (Return_Code & 0x08)
   {
      UART_StringOut("\tParity error(s)\n");
   }

   UART_StringOut("\nDATA CH2:\n");
   for (colCount = 0; colCount < 128; colCount++)
   {
      UART_CharOut(0x30 + (ASCII_array[colCount]&0x0F));
      ASCII_array[colCount] = 0x30;
   }
   UART_CharOut('\n');
   UART_StringOut("END DATA CH2\n");
}
else                                          // No errors, print T2 data
{
   ERRT2 = 0;
   UART_StringOut("\nDATA CH2:\n");

   for (colCount = 0; colCount < Return_Code; colCount++)
   {
      UART_CharOut(0x30 + (ASCII_array[colCount]&0x0F));
      ASCII_array[colCount] = 0x30;
   }
   UART_CharOut('\n');
   UART_StringOut("END DATA CH2\n");
}

// Print the RAW data for Track 2
UART_StringOut("\nRAW COLLECTION CH2:\n0x");

for (colCount = 0; colCount < COLLECTED2; colCount++)
{
   UART_HexOut (T2RAW[colCount]);
}

UART_CharOut('\n');
UART_StringOut("END RAW CH2\n");

// Signal Error / OK with LEDs
if (!ERRT1)
{
   TK1_RED_LED = 0;
```


Patent Owner's Ex. 2032
Page 019

```
         TK1_GRN_LED = 1;
      }
      else
      {
         TK1_RED_LED = 1;
         TK1_GRN_LED = 0;
      }

      // Signal Error / OK with LEDs
      if (!ERRT2)
      {
         TK2_RED_LED = 0;
         TK2_GRN_LED = 1;
      }
      else
      {
         TK2_RED_LED = 1;
         TK2_GRN_LED = 0;
      }

#endif // END #if DEBUG

// If DEBUG is '0', only output valid track info
#if !DEBUG

      // Find direction of track1, and decode to character array
      Return_Code = GetDirection(COLLECTED1, T1_SS, T1_ES, T1RAW, T1_BITS);

      if ((Return_Code & 0x80) == 0)               // If no error was detected
      {
         // Check character array for SS, ES, Parity, and LRC
         Return_Code = TrackErrorCheck(Return_Code, T1_SS, T1_ES, T1_BITS);
      }

      if (Return_Code & 0x80)                      // If an error was detected
      {                                            // set the error bit
         ERRT1 = 1;
      }
      else                                         // Otherwise print Track 1
      {
         ERRT1 = 0;
         for (colCount = 0; colCount < Return_Code; colCount++)
         {
            UART_CharOut(0x20 + (ASCII_array[colCount]&0x3F));
            ASCII_array[colCount] = 0x30;
         }
         UART_CharOut('\n');
      }


      // Find direction of track2, and decode to character array
      Return_Code = GetDirection(COLLECTED2, T2_SS, T2_ES, T2RAW, T2_BITS);

      if ((Return_Code & 0x80) == 0)               // If no error was detected
      {
         // Check character array for SS, ES, Parity, and LRC
         Return_Code = TrackErrorCheck(Return_Code, T2_SS, T2_ES, T2_BITS);
      }
```


Patent Owner's Ex. 2032
Page 020

```
      if (Return_Code & 0x80)                      // If an error was detected
      {                                            // set the error bit
         ERRT2 = 1;
      }
      else                                         // Otherwise print Track 2
      {
         ERRT2 = 0;
         for (colCount = 0; colCount < Return_Code; colCount++)
         {
            UART_CharOut(0x30 + (ASCII_array[colCount]&0x0F));
            ASCII_array[colCount] = 0x30;
         }
         UART_CharOut('\n');
      }

      // Signal Error / OK with LEDs
      if (!ERRT1)
      {
         TK1_RED_LED = 0;
         TK1_GRN_LED = 1;
      }
      else
      {
         TK1_RED_LED = 1;
         TK1_GRN_LED = 0;
      }

      // Signal Error / OK with LEDs
      if (!ERRT2)
      {
         TK2_RED_LED = 0;
         TK2_GRN_LED = 1;
      }
      else
      {
         TK2_RED_LED = 1;
         TK2_GRN_LED = 0;
      }

#endif // END #if !DEBUG

   }  // END while(1)
}  // END main()

//-----------------------------------------------------------------------------
// Initialization Subroutines
//-----------------------------------------------------------------------------

//-----------------------------------------------------------------------------
// PORT_Init
//-----------------------------------------------------------------------------
//
// Configure the Crossbar and GPIO ports.
//
// P0.0 - VREF Input    (analog, skipped)
// P0.2 - TK1 Green LED (push-pull, skipped)
// P0.3 - TK1 Red LED   (push-pull, skipped)
// P0.4 - UART TX       (push-pull)
// P0.5 - UART RX       (open drain)
```


Patent Owner's Ex. 2032
Page 021

```
// P0.6 - TK2 Green LED (push-pull, skipped)
// P0.7 - TK2 Red LED   (push-pull, skipped)
// P1.0 - Channel 1+    (analog, skipped)
// P1.1 - Channel 1-    (analog, skipped)
// P1.2 - Channel 2+    (analog, skipped)
// P1.3 - Channel 2-    (analog, skipped)
// P1.6 - TK3 Green LED (push-pull, skipped)
// P1.7 - TK3 Red LED   (push-pull, skipped)
//

void PORT_Init (void)
{
   P0MDOUT |= 0xDC;                    // enable TX and LEDs as push-pull out

   P0MDIN &= ~0x01;                    // VREF analog in
   P1MDIN &= ~0x0F;                    // Enable P1.0 through 1.3 as analog in
   P1MDOUT |= 0xC0;                    // P1.6, 1.7 Push-pull output

   P0SKIP |= 0xCD;                     // Skip VREF pin and LED Outputs
   P1SKIP |= 0xCF;                     // Skip Analog Inputs and LED Outputs

   XBR0    = 0x01;                     // Enable UART on P0.4(RX) and P0.5(TX)
   XBR1    = 0x40;                     // Enable crossbar and enable
                                       // weak pull-ups

   TK1_RED_LED = 0;                    // Turn all LEDs off
   TK1_GRN_LED = 0;
   TK2_RED_LED = 0;
   TK2_GRN_LED = 0;
   TK3_RED_LED = 0;
   TK3_GRN_LED = 0;
}

//-----------------------------------------------------------------------------
// SYSCLK_Init
//-----------------------------------------------------------------------------
//
// This routine initializes the system clock to use the internal oscillator
// at its maximum frequency, enables the Missing Clock Detector and VDD
// monitor.
//

void SYSCLK_Init (void)
{
   OSCICN |= 0x03;                     // Configure internal oscillator for
                                       // its maximum frequency
   RSTSRC = 0x06;                      // Enable missing clock detector and
                                       // VDD Monitor
}

//-----------------------------------------------------------------------------
// ADC0_Init
//-----------------------------------------------------------------------------
//
// Configure ADC0 to use Timer 2 as conversion source, and to initially point
// to Channel 2.  Disables ADC end of conversion interrupt. Leaves ADC
// disabled.
//
void ADC0_Init (void)
```


Patent Owner's Ex. 2032
Page 022

```
{
   ADC0CN = 0x02;                      // ADC0 disabled; Normal tracking
                                       // mode; ADC0 conversions are initiated
                                       // on timer 2

   AMX0P  = T1_CHPOS;                  // Channel 1+
   AMX0N  = T1_CHNEG;                  // Channel 1-

   ADC0CF = (SYSCLK/3000000) << 3;     // ADC conversion clock <= 3MHz

   ADC0CF &= ~0x04;                    // Right-Justify data
   REF0CN = 0x03;                      // VREF = P0.0 internal VREF, bias
                                       // generator is on.

}

//-----------------------------------------------------------------------------
// UART0_Init
//-----------------------------------------------------------------------------
//
// Configure the UART0 using Timer1, for <BAUDRATE> and 8-N-1.
//
void UART0_Init (void)
{
   SCON0 = 0x10;                       // SCON0: 8-bit variable bit rate
                                       //        level of STOP bit is ignored
                                       //        RX enabled
                                       //        ninth bits are zeros
                                       //        clear RI0 and TI0 bits
   if (SYSCLK/BAUDRATE/2/256 < 1) {
      TH1 = -(SYSCLK/BAUDRATE/2);
      CKCON &= ~0x0B;                  // T1M = 1; SCA1:0 = xx
      CKCON |=  0x08;
   } else if (SYSCLK/BAUDRATE/2/256 < 4) {
      TH1 = -(SYSCLK/BAUDRATE/2/4);
      CKCON &= ~0x0B;                  // T1M = 0; SCA1:0 = 01
      CKCON |=  0x01;
   } else if (SYSCLK/BAUDRATE/2/256 < 12) {
      TH1 = -(SYSCLK/BAUDRATE/2/12);
      CKCON &= ~0x0B;                  // T1M = 0; SCA1:0 = 00
   } else {
      TH1 = -(SYSCLK/BAUDRATE/2/48);
      CKCON &= ~0x0B;                  // T1M = 0; SCA1:0 = 10
      CKCON |=  0x02;
   }

   TL1 = TH1;                          // init Timer1
   TMOD &= ~0xf0;                      // TMOD: timer 1 in 8-bit autoreload
   TMOD |=  0x20;
   TR1 = 1;                            // START Timer1
   TI0 = 1;                            // Indicate TX0 ready
}


//-----------------------------------------------------------------------------
// Timer2_Init
//-----------------------------------------------------------------------------
//
// Configure Timer2 to auto-reload at interval specified by <counts> (no
```


Patent Owner's Ex. 2032
Page 023

```
// interrupt generated) using SYSCLK as its time base.
//
void Timer2_Init (int counts)
{
   TMR2CN = 0x00;                      // STOP Timer2; Clear TF2H and TF2L;
                                       // disable low-byte interrupt; disable
                                       // split mode; select internal timebase
   CKCON |= 0x10;                      // Timer2 uses SYSCLK as its timebase

   TMR2RL  = -counts;                  // Init reload values
   TMR2    = TMR2RL;                   // Init Timer2 with reload value
}

//-----------------------------------------------------------------------------
// Support Subroutines
//-----------------------------------------------------------------------------


//-----------------------------------------------------------------------------
// Swipe_Card
//-----------------------------------------------------------------------------
//
// This routine performs the signal detection and data collection when a card
// is swiped through the reader for Track 1 and 2.  Interrupts should be
// turned off when this routine runs for optimal performance.
//

unsigned char Swipe_Card(void)
{
unsigned char data zerocount1;                  // Zero counter - Track 1
unsigned char data bytecount1;                  // Raw data counter - TK 1
unsigned char data zerocount2;                  // Zero counter - Track 2
unsigned char data bytecount2;                  // Raw data counter - TK 2

char data runningsum1 = 0, rsum1_div = 0;       // Filtering variables
char data runningsum2 = 0, rsum2_div = 0;

                                                // Minimum / Maximum and
                                                //    next peak values
char data localmax1 = 0, localmin1 = 0, next_peak1 = 0;
char data localmax2 = 0, localmin2 = 0, next_peak2 = 0;

char data ADC_DATA;                             // Raw ADC Data (low byte)

unsigned int data cyclecount1, cyclecount2;     // Cycle counters

unsigned int maincycle;                         // Main time stamp for
                                                //   ADC conversions

unsigned int data maxtime1, mintime1;           // Min / Max time stamps
unsigned int data maxtime2, mintime2;

unsigned char data cycleindex1;                 // Index for # of cycles
unsigned char data cycleindex2;                 //   present in sum
unsigned int data cyclesum1 = 0;                // Sum over 3 cycles
unsigned int data cyclesum2 = 0;
unsigned int data CP75pct1 = 0, CP150pct1 = 0;  // 75% and 150% comparison
unsigned int data CP75pct2 = 0, CP150pct2 = 0;  //   values
```


Patent Owner's Ex. 2032
Page 024

```
bit ZERO_WAIT1, FIRST_ONE1, BIT_RECORD1;        // Bits keep track of stages
bit ZERO_WAIT2, FIRST_ONE2, BIT_RECORD2;        //   in the collection

bit LASTEDGE1 = 0;                              // State of last edges:
bit LASTEDGE2 = 0;                              //   1 = Positive
                                                //   0 = Negative

   maincycle = 0;                               // Reset ADC timestamp
   Timeout_Counter = 0;                         // Reset Timeout Variables
   READ_TIMEOUT = 0;                            // (included for clarity)
   CH2_SWITCH = 0;

   T1RAW[0] = 0;                                // Reset Track1 Variables
   COLLECTED1 = 1;
   ZERO_WAIT1 = 1;
   FIRST_ONE1 = 0;
   BIT_RECORD1 = 0;
   zerocount1 = 0;
   bytecount1 = 0;

   T2RAW[0] = 0;                                // Reset Track2 Variables
   COLLECTED2 = 1;
   ZERO_WAIT2 = 1;
   FIRST_ONE2 = 0;
   BIT_RECORD2 = 0;
   zerocount2 = 0;
   bytecount2 = 0;

   AMX0P  = T1_CHPOS;                           // Set up AIN+ channel
   AMX0N  = T1_CHNEG;                           // Set up AIN- channel

   AD0EN = 1;                                   // Enable ADC0
   TR2 = 1;                                     // start Timer2

   // wait for Timer2 overflow flag - 1st conversion begins
   while (!TF2H);
   TF2H = 0;                                    // clear timer overflow flag
   AMX0P = T2_CHPOS;                            // switch AIN+ channel
   AMX0N = T2_CHNEG;                            // switch AIN- channel

   while (!READ_TIMEOUT)
   {
      Timeout_Counter++;                        // Increment counters
      maincycle++;

      if (CH2_SWITCH)                           // check if CH2 is sampled
      {
         // wait for Timer2 overflow flag
         while (!TF2H);
         AMX0P = T1_CHPOS;                      // switch AIN+ channel
         AMX0N = T1_CHNEG;                      // switch AIN- channel
         ADC_DATA = ADC0L;                      // read current data low byte
         TF2H = 0;                              // clear timer overflow flag
      }
      else
      {
         // wait for Timer2 overflow flag
         while (!TF2H);
         AMX0P = T2_CHPOS;                      // switch AIN+ channel
```


Patent Owner's Ex. 2032
Page 025

```
   AMX0N = T2_CHNEG;                      // switch AIN- channel
   ADC_DATA = ADC0L;                      // read current data low byte
   TF2H = 0;                              // clear timer overflow flag
}

// Perform exponential average
runningsum1 = runningsum1 + ADC_DATA - rsum1_div;
rsum1_div = runningsum1>>2;

if (!ZERO_WAIT1)              // Test to see if still waiting for zeros
{                             // If NOT.. collect data

   if (!LASTEDGE1)            // Test if last edge was negative
   {
      if (runningsum1 > next_peak1)          // Test against peak limit
      {
                                             // Establish new local max
                                             //    and compute min-max
                                             //    peak timing
         localmax1 = runningsum1;
         cyclecount1 += mintime1 - maxtime1;
         next_peak1 = localmax1 - THRESHOLD1;

         if (cyclecount1 <= CP75pct1)        // 1/2 or Full cycle?
         {                                   // **1/2 cycle
            BIT_RECORD1 = 1;
            FIRST_ONE1 = 1;
         }
         else                                // **Full cycle
         {
            cyclesum1 += cyclecount1;        // Update cycle sum
            cycleindex1++;

            if (FIRST_ONE1)                  // If first '1' is found
            {
               Temp_Byte1 = Temp_Byte1 << 1;
               Temp1_b0 = BIT_RECORD1;       // Record a bit
               bytecount1++;
               BIT_RECORD1 = 0;              // Reset bit value to '0'
            }
            cyclecount1 = 0;                 // Reset cycle counter
            CLEAR_TIMEOUT = 0;               // Keep from timing out
         }
         LASTEDGE1 = 1;                      // Positive edge
      }
      else if (runningsum1 < localmin1)      // Check against local min
      {
         localmin1 = runningsum1;            // Update local min
                                             //   and next peak
         next_peak1 = localmin1 + THRESHOLD1;
         mintime1 = maincycle;               // Time stamp local min
      }
      else                                   // Perform some housekeeping
      {
         if (bytecount1 == 8)                // Store the current byte
         {
            T1RAW[COLLECTED1] = Temp_Byte1;
            bytecount1 = 0;
            COLLECTED1++;
```


Patent Owner's Ex. 2032
Page 026

```
         }
         if (cycleindex1 >= 3)              // Calculate 75% Value
         {
            CP75pct1 = cyclesum1 >> 2;
            cyclesum1 = 0;
            cycleindex1 = 0;
         }
      }
   }
   else                                     // Last edge was positive..
   {
      if (runningsum1 < next_peak1)         // Test against peak limit
      {
                                            // Establish new local min
                                            //    and compute max-min
                                            //    peak timing
         localmin1 = runningsum1;
         cyclecount1 += maxtime1 - mintime1;
         next_peak1 = localmin1 + THRESHOLD1;

         if (cyclecount1 <= CP75pct1)       // 1/2 or Full cycle?
         {                                  // **1/2 cycle
            BIT_RECORD1 = 1;
            FIRST_ONE1 = 1;
         }
         else                               // **Full cycle
         {
            cyclesum1 += cyclecount1;       // Update cycle sum
            cycleindex1++;

            if (FIRST_ONE1)                 // If first '1' is found
            {
               Temp_Byte1 = Temp_Byte1 << 1;
               Temp1_b0 = BIT_RECORD1;      // Record a bit
               bytecount1++;
               BIT_RECORD1 = 0;             // Reset bit value to '0'
            }
            cyclecount1 = 0;                // Reset cycle counter
            CLEAR_TIMEOUT = 0;
         }
         LASTEDGE1 = 0;                     // Negative edge
      }
      else if (runningsum1 > localmax1)     // Check against local max
      {
         localmax1 = runningsum1;           // Update local max
                                            //   and next peak
         next_peak1 = localmax1 - THRESHOLD1;
         maxtime1 = maincycle;              // Time stamp local max
      }
      else                                  // Perform some housekeeping
      {
         if (bytecount1 == 8)               // Store the current byte
         {
            T1RAW[COLLECTED1] = Temp_Byte1;
            bytecount1 = 0;
            COLLECTED1++;
         }
         if (cycleindex1 >= 3)              // Calculate 75% Value
         {
```


Patent Owner's Ex. 2032
Page 027

```
                CP75pct1 = cyclesum1 >> 2;
                cyclesum1 = 0;
                cycleindex1 = 0;
             }
          }
       }
   }     // End of data collection code (after Z_LIMIT zeros detected)

   else  // IF ZERO_WAIT1 == 1, still waiting for Z_LIMIT zeros
   {
      CLEAR_TIMEOUT = 0;

      if (!LASTEDGE1)            // Test if last edge was negative
      {
         if (runningsum1 > next_peak1)          // Test against peak limit
         {
                                                // Establish new local max
                                                //    and compute min-max
                                                //    peak timing
            localmax1 = runningsum1;
            cyclecount1 += mintime1 - maxtime1;
            next_peak1 = localmax1 - THRESHOLD1;

            cyclesum1 += cyclecount1;           // Update cycle sum
            cycleindex1++;

            // Check for a value that looks periodic
            if ((cyclecount1 > CP75pct1)&&(cyclecount1 < CP150pct1))
            {
               if (++zerocount1 == Z_LIMIT)     // Count up and check
               {                                // for Z_LIMIT
                  ZERO_WAIT1 = 0;
                  TK1_RED_LED = 1;
                  TK1_GRN_LED = 1;
               }
            }
            else                                // Outside of range
            {
               zerocount1 = 0;                  // Reset zero count
            }

            cyclecount1 = 0;                    // Reset cycle counter
            LASTEDGE1 = 1;                      // Positive edge
         }
         else if (runningsum1 < localmin1)      // Check against local min
         {
            localmin1 = runningsum1;            // Update local min
                                                //   and next peak
            next_peak1 = localmin1 + THRESHOLD1;
            mintime1 = maincycle;               // Time stamp local min
         }
         else                                   // Perform some housekeeping
         {
            if (cycleindex1 >= 3)               // Calculate 75% and 150%
            {
               CP150pct1 = cyclesum1 >> 1;
               CP75pct1 = CP150pct1 >> 1;
               cyclesum1 = 0;
               cycleindex1 = 0;
```


Patent Owner's Ex. 2032
Page 028

```
            }
         }
      }
      else                                      // Last edge was positive
      {
         if (runningsum1 < next_peak1)          // Test against peak limit
         {
                                                // Establish new local min
                                                //    and compute max-min
                                                //    peak timing
            localmin1 = runningsum1;
            cyclecount1 += maxtime1 - mintime1;
            next_peak1 = localmin1 + THRESHOLD1;

            cyclesum1 += cyclecount1;           // Update cycle sum
            cycleindex1++;

            // Check for a value that looks periodic
            if ((cyclecount1 > CP75pct1)&&(cyclecount1 < CP150pct1))
            {
               if (++zerocount1 == Z_LIMIT)     // Count up and check
               {                                // for Z_LIMIT
                  ZERO_WAIT1 = 0;
                  TK1_RED_LED = 1;
                  TK1_GRN_LED = 1;
               }
            }
            else                                // Outside of range
            {
               zerocount1 = 0;                  // Reset zero count
            }
            cyclecount1 = 0;                    // Reset cycle counter
            LASTEDGE1 = 0;                      // Negative edge
         }
         else if (runningsum1 > localmax1)      // Check against local max
         {
            localmax1 = runningsum1;            // Update local max
                                                //   and next peak
            next_peak1 = localmax1 - THRESHOLD1;
            maxtime1 = maincycle;               // Time stamp local max
         }
         else                                   // Perform some housekeeping
         {
            if (cycleindex1 >= 3)               // Calculate 75% and 150%
            {
               CP150pct1 = cyclesum1 >> 1;
               CP75pct1 = CP150pct1 >> 1;
               cyclesum1 = 0;
               cycleindex1 = 0;
            }
         }
      }
   }     // End of Waiting for Zeroes code (before Z_LIMIT reached)


   if (CH2_SWITCH)                              // Check if CH2 is sampled
   {
      // wait for Timer2 overflow flag
      while (!TF2H);
```


Patent Owner's Ex. 2032
Page 029

```
AMX0P = T1_CHPOS;                        // switch AIN+ channel
AMX0N = T1_CHNEG;                        // switch AIN- channel
ADC_DATA = ADC0L;                        // read current data low byte
TF2H = 0;                                // clear timer overflow flag

// Perform exponential average
runningsum2 = runningsum2 + ADC_DATA - rsum2_div;
rsum2_div = runningsum2>>2;

maincycle++;

if (!ZERO_WAIT2)           // Test to see if still waiting for zeros
{                          // If NOT.. collect data

   if (!LASTEDGE2)         // Test if last edge was negative
   {
      if (runningsum2 > next_peak2)       // Test against peak limit
      {
                                          // Establish new local max
                                          //    and compute min-max
                                          //    peak timing
         localmax2 = runningsum2;
         cyclecount2 += mintime2 - maxtime2;
         next_peak2 = localmax2 - THRESHOLD2;

         if (cyclecount2 <= CP75pct2)     // 1/2 or Full cycle?
         {                                // **1/2 cycle
            BIT_RECORD2 = 1;
            FIRST_ONE2 = 1;
         }
         else                             // **Full cycle
         {
            cyclesum2 += cyclecount2;     // Update cycle sum
            cycleindex2++;

            if (FIRST_ONE2)               // If first '1' is found
            {
               Temp_Byte2 = Temp_Byte2 << 1;
               Temp2_b0 = BIT_RECORD2;    // Record a bit
               bytecount2++;
               BIT_RECORD2 = 0;           // Reset bit value to '0'
            }
            cyclecount2 = 0;              // Reset cycle counter
         }
         LASTEDGE2 = 1;                   // Positive edge
      }
      else if (runningsum2 < localmin2)   // Check against local min
      {
                                          // Update local min
         localmin2 = runningsum2;         //   and next peak
         next_peak2 = localmin2 + THRESHOLD2;
         mintime2 = maincycle;            // Time stamp local min
      }
      else                                // Perform some housekeeping
      {
         if (bytecount2 == 8)             // Store the current byte
         {
            T2RAW[COLLECTED2] = Temp_Byte2;
            bytecount2 = 0;
```


Patent Owner's Ex. 2032
Page 030

```
            COLLECTED2++;
         }
         if (cycleindex2 >= 3)            // Calculate 75% Value
         {
            CP75pct2 = cyclesum2 >> 2;
            cyclesum2 = 0;
            cycleindex2 = 0;
         }
      }
   }
   else                                   // Last edge was positive..
   {
      if (runningsum2 < next_peak2)       // Test against peak limit
      {
                                          // Establish new local min
                                          //    and compute max-min
                                          //    peak timing
         localmin2 = runningsum2;
         cyclecount2 += maxtime2 - mintime2;
         next_peak2 = localmin2 + THRESHOLD2;

         if (cyclecount2 <= CP75pct2)     // 1/2 or Full cycle?
         {                                // **1/2 cycle
            BIT_RECORD2 = 1;
            FIRST_ONE2 = 1;
         }
         else                             // **Full cycle
         {
            cyclesum2 += cyclecount2;     // Update cycle sum
            cycleindex2++;

            if (FIRST_ONE2)               // If first '1' is found
            {
               Temp_Byte2 = Temp_Byte2 << 1;
               Temp2_b0 = BIT_RECORD2;    // Record a bit
               bytecount2++;
               BIT_RECORD2 = 0;           // Reset bit value to '0'
            }
            cyclecount2 = 0;              // Reset cycle counter
         }
         LASTEDGE2 = 0;                   // Negative edge
      }
      else if (runningsum2 > localmax2)   // Check against local max
      {
                                          // Update local max
         localmax2 = runningsum2;         //   and next peak
         next_peak2 = localmax2 - THRESHOLD2;
         maxtime2 = maincycle;            // Time stamp local max

      }
      else                                // Perform some housekeeping
      {
         if (bytecount2 == 8)             // Store the current byte
         {
            T2RAW[COLLECTED2] = Temp_Byte2;
            bytecount2 = 0;
            COLLECTED2++;
         }
         if (cycleindex2 >= 3)            // Calculate 75% Value
```


Patent Owner's Ex. 2032
Page 031

```
            {
               CP75pct2 = cyclesum2 >> 2;
               cyclesum2 = 0;
               cycleindex2 = 0;
            }
         }
      }
   }     // End of data collection code (after Z_LIMIT zeros detected)

   else  // IF ZERO_WAIT2 == 1, still waiting for Z_LIMIT zeros
   {
      if (!LASTEDGE2)         // Test if last edge was negative
      {
         if (runningsum2 > next_peak2)       // Test against peak limit
         {
                                             // Establish new local max
                                             //    and compute min-max
                                             //    peak timing
            localmax2 = runningsum2;
            cyclecount2 += mintime2 - maxtime2;
            next_peak2 = localmax2 - THRESHOLD2;

            cyclesum2 += cyclecount2;        // Update cycle sum
            cycleindex2++;

            // Check for a value that looks periodic
            if ((cyclecount2 > CP75pct2)&&(cyclecount2 < CP150pct2))
            {
               if (++zerocount2 == Z_LIMIT)  // Count up and check
               {                             // for Z_LIMIT
                  ZERO_WAIT2 = 0;
                  TK2_RED_LED = 1;
                  TK2_GRN_LED = 1;
               }
            }
            else                             // Outside of range
            {
               zerocount2 = 0;               // Reset zero count
            }
            cyclecount2 = 0;                 // Reset cycle counter
            LASTEDGE2 = 1;                   // Positive edge
         }
         else if (runningsum2 < localmin2)   // Check against local min
         {
                                             // Update local min
            localmin2 = runningsum2;         //   and next peak
            next_peak2 = localmin2 + THRESHOLD2;
            mintime2 = maincycle;            // Time stamp local min
         }
         else                                // Perform some housekeeping
         {
            if (cycleindex2 >= 3)            // Calculate 75% and 150%
            {
               CP150pct2 = cyclesum2 >> 1;
               CP75pct2 = CP150pct2 >> 1;
               cyclesum2 = 0;
               cycleindex2 = 0;
            }
         }
```


Patent Owner's Ex. 2032
Page 032

```
            }
            else                                    // Last edge was positive
            {
               if (runningsum2 < next_peak2)        // Test against peak limit
               {
                                                    // Establish new local min
                                                    //    and compute max-min
                                                    //    peak timing
                  localmin2 = runningsum2;
                  cyclecount2 += maxtime2 - mintime2;
                  next_peak2 = localmin2 + THRESHOLD2;

                  cyclesum2 += cyclecount2;         // Update cycle sum
                  cycleindex2++;

                  // Check for a value that looks periodic
                  if ((cyclecount2 > CP75pct2)&&(cyclecount2 < CP150pct2))
                  {
                     if (++zerocount2 == Z_LIMIT)   // Count up and check
                     {                              // for Z_LIMIT
                        ZERO_WAIT2 = 0;
                        TK2_RED_LED = 1;
                        TK2_GRN_LED = 1;
                     }
                  }
                  else                              // Outside of range
                  {
                     zerocount2 = 0;                // Reset zero count
                  }
                  cyclecount2 = 0;                  // Reset cycle counter
                  LASTEDGE2 = 0;                    // Negative edge
               }
               else if (runningsum2 > localmax2)    // Check against local max
               {
                                                    // Update local max
                  localmax2 = runningsum2;          //   and next peak
                  next_peak2 = localmax2 - THRESHOLD2;
                  maxtime2 = maincycle;             // Time stamp local max
               }
               else                                 // Perform some housekeeping
               {
                  if (cycleindex2 >= 3)             // Calculate 75% and 150%
                  {
                     CP150pct2 = cyclesum2 >> 1;
                     CP75pct2 = CP150pct2 >> 1;
                     cyclesum2 = 0;
                     cycleindex2 = 0;
                  }
               }
            }
         }     // End of Waiting for Zeroes code (before Z_LIMIT reached)

      }  // End IF CH2_SWITCH

   } // End While (!READ_TIMEOUT)

   // Finish off last bytes with zeros..
   while (bytecount1 < 8)
   {
```


Patent Owner's Ex. 2032
Page 033

```
      Temp_Byte1 = Temp_Byte1 << 1;
      Temp1_b0 = 0;                                // record a zero
      bytecount1++;
   }
   T1RAW[COLLECTED1] = Temp_Byte1;

   while (bytecount2 < 8)
   {
      Temp_Byte2 = Temp_Byte2 << 1;
      Temp2_b0 = 0;                                // record a zero
      bytecount2++;
   }
   T2RAW[COLLECTED2] = Temp_Byte2;

   return (1);
}


//-----------------------------------------------------------------------------
// TrackErrorCheck
//-----------------------------------------------------------------------------
//
// This routine checks the decoded track data for Start Sentinel, End Sentinel,
// Parity, and LRC errors.
//

char TrackErrorCheck (unsigned char maxindex, unsigned char StartSen,
   unsigned char EndSen, unsigned char CharBits)
{
unsigned char idata ASCII_Index, ASCII_Mask;
unsigned char idata ASCII_Data, PC_count, Read_LRC = 0, Calc_LRC = 0;
char idata errorcode = 0;
bit ES_Found = 0,  ParityCheck = 0;

   ASCII_Mask = 0x7F >> (8 - CharBits);      // Mask used to separate data info

   if (ASCII_array[0] != StartSen)           // Check for SS at start of array
   {
      errorcode |= 0x81;                     // ERROR - SS is not 1st character
   }

   // Loop through ASCII_array and check each byte for errors
   for (ASCII_Index = 0; ASCII_Index <= maxindex; ASCII_Index++)
   {
      ASCII_Data = ASCII_array[ASCII_Index];
      if (!ES_Found)                         // If ES not found yet
      {
         // LRC Check - XOR's data from all bytes (except the LRC)
         Calc_LRC ^= (ASCII_Data & ASCII_Mask);

         if (ASCII_Data == EndSen)           // If this is the End Sentinel,
         {                                   // treat the next character as
                                             // the LRC, and signal that
                                             // the ES has been found
            Read_LRC = (ASCII_array[ASCII_Index+1] & ASCII_Mask);
            maxindex = ASCII_Index+1;
            ES_Found = 1;
         }
      }
```


Patent Owner's Ex. 2032
Page 034

```
      // Parity Check - checks #1's against Parity bit for ODD parity.
      ParityCheck = 0;                        // Reset parity check variable
      for (PC_count = 0; PC_count < CharBits; PC_count++)
      {
         ParityCheck ^= (ASCII_Data & 0x01);
         ASCII_Data = ASCII_Data >> 1;
      }
      if (ParityCheck == (ASCII_Data & 0x01))
      {
         ASCII_array[ASCII_Index] |= 0x80;   // Mark this byte for ID later
         errorcode |= 0x88;                  // ERROR - Parity error
      }
   }

   // Check that End Sentinel was found in captured data
   if (!ES_Found)
   {
      errorcode |=0x82; // ERROR - End Sentinel never found
   }
   // If ES was found...
   else if (Calc_LRC != (Read_LRC & ASCII_Mask))
   {
      errorcode |= 0x84; // LRC error

      // Parity Check for LRC - checks #1's against Parity bit for ODD parity.
      ParityCheck = 0;                        // Reset parity check variable
      for (PC_count = 0; PC_count < CharBits; PC_count++)
      {
         ParityCheck ^= (Read_LRC & 0x01);
         Read_LRC = Read_LRC >> 1;
      }
      if (ParityCheck == (Read_LRC & 0x01))
      {
         ASCII_array[maxindex] |= 0x80;      // Mark LRC byte for ID later
         errorcode |= 0x88;                  // ERROR - Parity error
      }
   }

   // If no errors were detected, return the number of bytes found.
   // Otherwise, return the error code.
   if (errorcode == 0)
   {
      return ASCII_Index;
   }
   else
   {
      return errorcode;
   }

}

//-----------------------------------------------------------------------------
// DecodeTrackForward
//-----------------------------------------------------------------------------
//
// This routine is used to decode a track into characters, assuming it was
// recorded in the forward direction into the array.
//
```


Patent Owner's Ex. 2032
Page 035

```
char DecodeTrackForward (unsigned char maxindex, unsigned char Byte_Offset,
   unsigned char Bit_Offset, unsigned char *TrackRAW, unsigned char CharBits)
{
unsigned char idata Track_Index = 0;
char idata ASCII_Index = 0, ASCII_Mask;
unsigned char idata Track_Data, ASCII_Data;
unsigned char idata Track_bit, ASCII_bit;

   // Reset temporary variables
   ASCII_bit = 0x01;
   ASCII_Data = 0x00;

   // Generate a bit comparison value for sorting through ASCII bytes
   ASCII_Mask = 0x01 << (CharBits-1);

   // Begin at the specified offset, and proceed until the end of the track
   for (Track_Index = Byte_Offset; Track_Index <= maxindex; Track_Index++)
   {
      // Grab a byte of raw data
      Track_Data = TrackRAW[Track_Index];

      // Unpack raw data byte into character(s)
      for (Track_bit = Bit_Offset; Track_bit != 0x00; Track_bit = Track_bit>>1)
      {
         if (Track_bit & Track_Data)
         {
            ASCII_Data |= ASCII_bit;
         }
         else
         {
            ASCII_Data &= ~ASCII_bit;
         }
         if (ASCII_bit != ASCII_Mask)
         {
            ASCII_bit = ASCII_bit << 1;
         }
         else
         {
            ASCII_bit = 0x01;
            ASCII_array[ASCII_Index] = ASCII_Data;

            if ((ASCII_Data == 0x00)||(ASCII_Index == 126))
            {
               Track_Index = maxindex;       // end translation
            }

            ASCII_Index++;
         }
      }
   }

   // Return the number of characters unpacked
   return (ASCII_Index);

}

//-----------------------------------------------------------------------------
// DecodeTrackBackward
```


Patent Owner's Ex. 2032
Page 036

```
//-----------------------------------------------------------------------------
//
// This routine is used to decode a track into characters, assuming it was
// recorded in the backward direction into the array.
//
char DecodeTrackBackward (unsigned char Byte_Offset, unsigned char Bit_Offset,
   unsigned char *TrackRAW, unsigned char CharBits)
{
unsigned char idata Track_Index;
char idata ASCII_Index = 0, ASCII_Mask;
unsigned char idata Track_Data, ASCII_Data;
unsigned char idata ASCII_bit;


   // Reset temporary variables
   ASCII_bit = 0x01;
   ASCII_Data = 0x00;

   // Generate a bit comparison value for sorting through ASCII bytes
   ASCII_Mask = 0x01 << (CharBits-1);

   // Begin at the specified offset, and proceed until the beginning
   for (Track_Index = Byte_Offset; Track_Index != 0x00; Track_Index--)
   {
      // Grab a byte of raw data
      Track_Data = TrackRAW[Track_Index];

      // Unpack raw data byte into character(s)
      while (Bit_Offset != 0x00)
      {
         if (Bit_Offset & Track_Data)
         {
            ASCII_Data |= ASCII_bit;
         }
         else
         {
            ASCII_Data &= ~ASCII_bit;
         }
         if (ASCII_bit != ASCII_Mask)
         {
            ASCII_bit = ASCII_bit << 1;
         }
         else
         {
            ASCII_bit = 0x01;
            ASCII_array[ASCII_Index] = ASCII_Data;
            ASCII_Data = 0;
            ASCII_Index++;
         }
         Bit_Offset = Bit_Offset << 1;
      }
      Bit_Offset = 0x01;
   }

   // Finish off last byte with trailing zeros
   ASCII_Mask = ASCII_Mask << 1;
   while (ASCII_bit != ASCII_Mask)
   {
      ASCII_Data &= ~ASCII_bit;
```


Patent Owner's Ex. 2032
Page 037

```
      ASCII_bit = ASCII_bit << 1;
   }
   ASCII_array[ASCII_Index] = ASCII_Data;

   // Return the number of characters unpacked
   return (ASCII_Index);

}


//-----------------------------------------------------------------------------
// GetDirection
//-----------------------------------------------------------------------------
//
// This routine determines which direction data was collected from the magnetic
// stripe and calls the appropriate decoding routine.
//

char GetDirection (unsigned char maxindex, unsigned char StartSen,
   unsigned char EndSen, unsigned char *TrackRAW, unsigned char CharBits)
{

unsigned char idata FW_Byte_Off, FW_Bit_Off, RV_Byte_Off, RV_Bit_Off;
unsigned char idata Read_Char, Bit_Count, Temp_Char, Temp_Bit, Temp_Mask;
char idata MAX_Decoded;
bit FW_StartSen, RV_StartSen, Direction_Found = 0, Abort_Direction = 0;

   // Initialize Index Pointers
   FW_Byte_Off = 1;
   FW_Bit_Off = 0x80;
   RV_Byte_Off = maxindex;
   RV_Bit_Off = 0x01;


   while ((Direction_Found == 0)&&(Abort_Direction == 0))
   {
      // Read a byte at FW pointer
      Read_Char = TrackRAW[FW_Byte_Off];

      // Find the next '1' Forward
      while ((FW_Byte_Off != RV_Byte_Off)&&((Read_Char & FW_Bit_Off) == 0))
      {
         FW_Bit_Off = FW_Bit_Off >> 1;
         if (FW_Bit_Off == 00)
         {
            FW_Bit_Off = 0x80;
            FW_Byte_Off++;
            Read_Char = TrackRAW[FW_Byte_Off];
         }
      }

      if (FW_Byte_Off == RV_Byte_Off)
      {
         Abort_Direction = 1;
      }

      Temp_Bit = 0x02;
      Temp_Char = 0x01;
      Temp_Mask = FW_Bit_Off;
```


Patent Owner's Ex. 2032
Page 038

```
for (Bit_Count = 1; Bit_Count < CharBits; Bit_Count++)
{
   Temp_Mask = Temp_Mask >> 1;
   if (Temp_Mask == 0x00)
   {
      Temp_Mask = 0x80;
      Read_Char = TrackRAW[FW_Byte_Off+1];
   }
   if (Read_Char & Temp_Mask)
   {
      Temp_Char |= Temp_Bit;
   }
   else
   {
      Temp_Char &= ~Temp_Bit;
   }
   Temp_Bit = Temp_Bit << 1;
}

// Check character against Start Sentinel
if (Temp_Char == StartSen)
{
   FW_StartSen = 1;
}
else
{
   FW_StartSen = 0;
}

// Read a byte at RV pointer
Read_Char = TrackRAW[RV_Byte_Off];

// Find the next '1' Reverse
while ((FW_Byte_Off != RV_Byte_Off)&&((Read_Char & RV_Bit_Off) == 0))
{
   RV_Bit_Off = RV_Bit_Off << 1;
   if (RV_Bit_Off == 00)
   {
      RV_Bit_Off = 0x01;
      RV_Byte_Off--;
      Read_Char = TrackRAW[RV_Byte_Off];
   }
}

if (FW_Byte_Off == RV_Byte_Off)
{
   Abort_Direction = 1;
}

Temp_Bit = 0x02;
Temp_Char = 0x01;
Temp_Mask = RV_Bit_Off;

for (Bit_Count = 1; Bit_Count < CharBits; Bit_Count++)
{
   Temp_Mask = Temp_Mask << 1;
   if (Temp_Mask == 0x00)
   {
```


Patent Owner's Ex. 2032
Page 039

```
            Temp_Mask = 0x01;
            Read_Char = TrackRAW[RV_Byte_Off-1];
         }
         if (Read_Char & Temp_Mask)
         {
            Temp_Char |= Temp_Bit;
         }
         else
         {
            Temp_Char &= ~Temp_Bit;
         }
         Temp_Bit = Temp_Bit << 1;
      }

      // Check character against Start Sentinel
      if (Temp_Char == StartSen)
      {
         RV_StartSen = 1;
      }
      else
      {
         RV_StartSen = 0;
      }

      if (FW_StartSen ^ RV_StartSen)
      {
         Direction_Found = 1;
      }
      else if (FW_StartSen && RV_StartSen)
      {
         //*** Check for ES Backwards in front
         Temp_Bit = 0x80;
         Temp_Char = 0x00;
         Temp_Mask = FW_Bit_Off;

         MAX_Decoded = FW_Byte_Off; // MAX_Decoded used as temporary storage
         if ((Temp_Mask >> CharBits) != 0x00)
         {
            Temp_Mask = Temp_Mask >> CharBits;
         }
         else
         {
            FW_Byte_Off++;
            Temp_Mask = Temp_Mask << (8 - CharBits);
         }

         Read_Char = TrackRAW[FW_Byte_Off];
         for (Bit_Count = 0; Bit_Count < CharBits; Bit_Count++)
         {
            if (Read_Char & Temp_Mask)
            {
               Temp_Char |= Temp_Bit;
            }
            else
            {
               Temp_Char &= ~Temp_Bit;
            }
            Temp_Bit = Temp_Bit >> 1;
```


Patent Owner's Ex. 2032
Page 040

```
            Temp_Mask = Temp_Mask >> 1;
            if (Temp_Mask == 0x00)
            {
               Temp_Mask = 0x80;
               Read_Char = TrackRAW[FW_Byte_Off+1];
            }
         }
         FW_Byte_Off = MAX_Decoded; // Restore FW_Byte_Off

         Temp_Char = Temp_Char >> (8 - CharBits);
         // Check character against End Sentinel
         // If found here, track is reverse.
         if (Temp_Char == EndSen)
         {
            FW_StartSen = 0;
         }
         //otherwise, it is forward
         else
         {
            RV_StartSen = 0;
         }

         Direction_Found = 1;
      }
      else if (!Abort_Direction)
      {
         FW_Bit_Off = FW_Bit_Off >> 1;
         if (FW_Bit_Off == 00)
         {
            FW_Bit_Off = 0x80;
            FW_Byte_Off++;
         }
         RV_Bit_Off = RV_Bit_Off << 1;
         if (RV_Bit_Off == 00)
         {
            RV_Bit_Off = 0x01;
            RV_Byte_Off--;
         }

         if (FW_Byte_Off >= RV_Byte_Off)
         {
            Abort_Direction = 1;
         }
      }

   }  // End while((Direction_Found == 0)&&(Abort_Direction == 0))

   if ((Direction_Found)&&(!Abort_Direction))
   {
      if (FW_StartSen)
      {
         MAX_Decoded = DecodeTrackForward(maxindex, FW_Byte_Off, FW_Bit_Off,
            TrackRAW, CharBits);
      }
      else if (RV_StartSen)
      {
         MAX_Decoded = DecodeTrackBackward(RV_Byte_Off, RV_Bit_Off,
            TrackRAW, CharBits);
      }
```


Patent Owner's Ex. 2032
Page 041

```
   }
   else
   {
      MAX_Decoded = 0x81;                    // Could not find Start Sentinel
   }

   return (MAX_Decoded);

}

//-----------------------------------------------------------------------------
// UART_CharOut
//-----------------------------------------------------------------------------
//
// This routine sends a single character to the UART.  It is used in lieu of
// printf() to reduce overall code size.
//

void UART_CharOut (unsigned char c)
{
   if (c == '\n')
   {
      while (!TI0);
      TI0 = 0;
      SBUF0 = 0x0d;                   /* output CR  */
   }
   while (!TI0);
   TI0 = 0;
   SBUF0 = c;
}

//-----------------------------------------------------------------------------
// UART_StringOut
//-----------------------------------------------------------------------------
//
// This routine calls the UART_CharOut repeatedly to send a string value to the
// UART.  It is used in lieu of printf() to reduce overall code size.
//

void UART_StringOut (unsigned char *c)
{
   while (*c != 0x00)
   {
      UART_CharOut(*c);
      c++;
   }
}


#if DEBUG
//-----------------------------------------------------------------------------
// UART_HexOut
//-----------------------------------------------------------------------------
//
// This routine sends the hexadecimal value of a character to the UART as ASCII
// text. Only used when DEBUG = 1.
//
void UART_HexOut (unsigned char c)
{
```


Patent Owner's Ex. 2032
Page 042

```
   while (!TI0);
   TI0 = 0;
   if ((c & 0xF0) < 0xA0)
      SBUF0 = ((c >> 4) & 0x0F) + 0x30;
   else
      SBUF0 = ((c >> 4) & 0x0F) + 0x37;

   while (!TI0);
   TI0 = 0;
   if ((c & 0x0F) < 0x0A)
      SBUF0 = (c & 0x0F) + 0x30;
   else
      SBUF0 = (c & 0x0F) + 0x37;

}
#endif   // END #if DEBUG
```


Patent Owner's Ex. 2032
Page 043

APPENDIX F—FIRMWARE LISTING FOR 3-CHANNEL EXAMPLE

```
//-----------------------------------------------------------------------------
// MagStripeReaderF330_3CH.c
//-----------------------------------------------------------------------------
// Copyright 2004 Silicon Laboratories
//
// AUTH: BD
// DATE: 3 MAR 04
// VER:  2.0
//
// This program reads the magnetic stripe from a card written in the standard
// ISO 3-channel format using F2F encoding.  Read data is output to the UART
// after being decoded.
//
// Target: C8051F33x
// Tool chain: KEIL C51 7.06 / KEIL EVAL C51
//

//-----------------------------------------------------------------------------
// Includes
//-----------------------------------------------------------------------------

#include <c8051f330.h>                    // SFR declarations for C8051F330

//-----------------------------------------------------------------------------
// 16-bit SFR Definitions for 'F33x
//-----------------------------------------------------------------------------
sfr16 TMR2RL   = 0xca;                    // Timer2 reload value
sfr16 TMR2     = 0xcc;                    // Timer2 counter


//-----------------------------------------------------------------------------
// Conditional Compilation CONSTANTS
//-----------------------------------------------------------------------------

#define DEBUG        0                    // Set to '1' for extra information
#define T3_5BIT      1                    // Set to '1' for T3 5-bit encoding
                                          // Set to '0' for T3 7-bit encoding

// **NOTE** The Track 3 encoding scheme is different for different card types
//          The ISO-4909 standard uses 5-bit Track 3 encoding
//          Many cards now use 7-bit encoding for Track 3


//-----------------------------------------------------------------------------
// Global CONSTANTS
//-----------------------------------------------------------------------------

#define SYSCLK       24500000             // SYSCLK frequency in Hz
#define BAUDRATE     115200               // Baud rate of UART in bps
#define SAMPLE_RATE  200000               // Sample rate of ADC

#define T1_SS        0x45                 // Start Sentinel + parity
#define T1_ES        0x1F                 // End Sentinel + parity
#define T1_BITS      7                    // data + parity bit
#define T1_CHPOS     0x08                 // Positive ADC Mux channel
```


Patent Owner's Ex. 2032
Page 044

```
#define T1_CHNEG     0x09                 // Negative ADC Mux channel

#define T2_SS        0x0B                 // Start Sentinel + parity
#define T2_ES        0x1F                 // End Sentinel + parity
#define T2_BITS      5                    // data + parity bit
#define T2_CHPOS     0x0A                 // Positive ADC Mux channel
#define T2_CHNEG     0x0B                 // Negative ADC Mux channel

#if T3_5BIT                               // Use 5-bit encoding on Track 3
#define T3_SS        0x0B                 // Start Sentinel + parity
#define T3_ES        0x1F                 // End Sentinel + parity
#define T3_BITS      5                    // data + parity bit
#endif

#if !T3_5BIT                              // Use 7-bit encoding on Track 3
#define T3_SS        0x45                 // Start Sentinel + parity
#define T3_ES        0x1F                 // End Sentinel + parity
#define T3_BITS      7                    // data + parity bit
#endif

#define T3_CHPOS     0x0C                 // Positive ADC Mux channel
#define T3_CHNEG     0x0D                 // Negative ADC Mux channel

#define THRESHOLD1   7                    // Noise threshold limits
#define THRESHOLD2   7
#define THRESHOLD3   7

#define Z_LIMIT      3                    // Number of Zeros before recording

sbit TK1_GRN_LED   = P0^2;                // GREEN LED TK1
sbit TK1_RED_LED   = P0^3;                // RED LED TK1

sbit TK2_GRN_LED   = P0^6;                // GREEN LED TK2
sbit TK2_RED_LED   = P0^7;                // RED LED TK2

sbit TK3_GRN_LED   = P1^6;                // GREEN LED TK3
sbit TK3_RED_LED   = P1^7;                // RED LED TK3


//-----------------------------------------------------------------------------
// Global VARIABLES
//-----------------------------------------------------------------------------

unsigned char xdata T1RAW[100], T2RAW[100],     // Track 1 and 2 Raw Data
                                T3RAW[100];     // Track 3 Raw Data
unsigned char xdata ASCII_array[128];           // Decoded Information
unsigned char COLLECTED1 = 1, COLLECTED2 = 1,   // Raw data indices
                              COLLECTED3 = 1;

unsigned int bdata Timeout_Counter;       // Bit-Addressable Timeout counter
sbit CLEAR_TIMEOUT = Timeout_Counter ^ 4; // Used to keep from timing out
sbit READ_TIMEOUT = Timeout_Counter ^ 5;  // Indicates when read is finished
sbit CH2_SWITCH = Timeout_Counter ^ 8;    // LSB of counter:
                                          //   If '1', CH2 is sampled
                                          //   If '0', CH2 is skipped

unsigned char bdata Temp_Byte1;           // Bit-Addressable Temporary Storage
sbit Temp1_b0 = Temp_Byte1 ^ 0;           // LSB of Temp_Byte1
```


Patent Owner's Ex. 2032
Page 045

```
unsigned char bdata Temp_Byte2;           // Bit-Addressable Temporary Storage
sbit Temp2_b0 = Temp_Byte2 ^ 0;           // LSB of Temp_Byte2

unsigned char bdata Temp_Byte3;           // Bit-Addressable Temporary Storage
sbit Temp3_b0 = Temp_Byte3 ^ 0;           // LSB of Temp_Byte3


//-----------------------------------------------------------------------------
// Function PROTOTYPES
//-----------------------------------------------------------------------------

void SYSCLK_Init (void);
void ADC0_Init (void);
void UART0_Init (void);
void PORT_Init (void);
void Timer2_Init (int);

unsigned char Swipe_Card(void);

char GetDirection (unsigned char maxindex, unsigned char StartSen,
                   unsigned char EndSen, unsigned char *TrackRAW,
                   unsigned char CharBits);
char DecodeTrackForward (unsigned char maxindex, unsigned char Byte_Offset,
                   unsigned char Bit_Offset, unsigned char *TrackRAW,
                   unsigned char CharBits);

char DecodeTrackBackward (unsigned char Byte_Offset, unsigned char Bit_Offset,
                   unsigned char *TrackRAW, unsigned char CharBits);

char TrackErrorCheck (unsigned char maxindex, unsigned char StartSen,
                   unsigned char EndSen, unsigned char CharBits);

void UART_CharOut (unsigned char c);
void UART_StringOut (unsigned char *c);
void UART_HexOut (unsigned char c);


//-----------------------------------------------------------------------------
// MAIN Routine
//-----------------------------------------------------------------------------

void main (void) {

unsigned char idata Return_Code;
unsigned char idata colCount;
bit ERRT1, ERRT2, ERRT3;                  // Track 1, 2, 3 Error Flags

   // Disable Watchdog timer
   PCA0MD &= ~0x40;                       // WDTE = 0 (clear watchdog timer
                                          // enable)
   PORT_Init();                           // Initialize Port I/O
   SYSCLK_Init ();                        // Initialize Oscillator

   ADC0_Init ();                          // Init ADC0
   Timer2_Init(SYSCLK/SAMPLE_RATE);       // Init Timer 2 w/ ADC sample rate
   UART0_Init();

   while (1) {
```


Patent Owner's Ex. 2032
Page 046

```
#if DEBUG
      UART_StringOut("\nTesting");
#endif   // END #if DEBUG

      UART_StringOut("\n");

      Swipe_Card();

// If DEBUG is '1', use verbose mode for output
#if DEBUG

      // Find direction of track1, and decode to character array
      Return_Code = GetDirection(COLLECTED1, T1_SS, T1_ES, T1RAW, T1_BITS);

      if ((Return_Code & 0x80) == 0)               // If no error was detected
      {
         // Check character array for SS, ES, Parity, and LRC
         Return_Code = TrackErrorCheck(Return_Code, T1_SS, T1_ES, T1_BITS);
      }

      if (Return_Code & 0x80)                      // If an error was detected
      {
         ERRT1 = 1;
         UART_StringOut("\nErrors: \n");           // List the errors detected

         if (Return_Code & 0x01)
         {
            UART_StringOut("\tStart Sentinel not found\n");
         }
         if (Return_Code & 0x02)
         {
            UART_StringOut("\tEnd Sentinel not found\n");
         }
         if (Return_Code & 0x04)
         {
            UART_StringOut("\tLRC incorrect\n");
         }
         if (Return_Code & 0x08)
         {
            UART_StringOut("\tParity error(s)\n");
         }

         UART_StringOut("\nDATA CH1:\n");
         for (colCount = 0; colCount < 128; colCount++)
         {
            UART_CharOut(0x20 + (ASCII_array[colCount]&0x3F));
            UART_CharOut(0x30);
         }
         UART_CharOut('\n');
         UART_StringOut("END DATA CH1\n");
      }
      else                                         // No errors, print T1 data
      {
         ERRT1 = 0;
         UART_StringOut("\nDATA CH1:\n");

         for (colCount = 0; colCount < Return_Code; colCount++)
         {
            UART_CharOut(0x20 + (ASCII_array[colCount]&0x3F));
```


Patent Owner's Ex. 2032
Page 047

```
            ASCII_array[colCount] = 0x30;
         }
         UART_CharOut('\n');
         UART_StringOut("END DATA CH1\n");
      }

      // Print the RAW data for Track 1
      UART_StringOut("\nRAW COLLECTION CH1:\n0x");

      for (colCount = 0; colCount < COLLECTED1; colCount++)
      {
         UART_HexOut (T1RAW[colCount]);
      }

      UART_CharOut('\n');
      UART_StringOut("END RAW CH1\n");

      // Find direction of track2, and decode to character array
      Return_Code = GetDirection(COLLECTED2, T2_SS, T2_ES, T2RAW, T2_BITS);

      if ((Return_Code & 0x80) == 0)               // If no error was detected
      {
         // Check character array for SS, ES, Parity, and LRC
         Return_Code = TrackErrorCheck(Return_Code, T2_SS, T2_ES, T2_BITS);
      }

      if (Return_Code & 0x80)                      // If an error was detected
      {
         ERRT2 = 1;
         UART_StringOut("\nErrors: \n");           // List the errors detected

         if (Return_Code & 0x01)
         {
            UART_StringOut("\tStart Sentinel not found\n");
         }
         if (Return_Code & 0x02)
         {
            UART_StringOut("\tEnd Sentinel not found\n");
         }
         if (Return_Code & 0x04)
         {
            UART_StringOut("\tLRC incorrect\n");
         }
         if (Return_Code & 0x08)
         {
            UART_StringOut("\tParity error(s)\n");
         }

         UART_StringOut("\nDATA CH2:\n");
         for (colCount = 0; colCount < 128; colCount++)
         {
            UART_CharOut(0x30 + (ASCII_array[colCount]&0x0F));
            ASCII_array[colCount] = 0x30;
         }
         UART_CharOut('\n');
         UART_StringOut("END DATA CH2\n");
      }
      else                                         // No errors, print T2 data
      {
```


Patent Owner's Ex. 2032
Page 048

```
      ERRT2 = 0;
      UART_StringOut("\nDATA CH2:\n");

      for (colCount = 0; colCount < Return_Code; colCount++)
      {
         UART_CharOut(0x30 + (ASCII_array[colCount]&0x0F));
         ASCII_array[colCount] = 0x30;
      }
      UART_CharOut('\n');
      UART_StringOut("END DATA CH2\n");
   }

   // Print the RAW data for Track 2
   UART_StringOut("\nRAW COLLECTION CH2:\n0x");

   for (colCount = 0; colCount < COLLECTED2; colCount++)
   {
      UART_HexOut (T2RAW[colCount]);
   }

   UART_CharOut('\n');
   UART_StringOut("END RAW CH2\n");

   // Find direction of track3, and decode to character array
   Return_Code = GetDirection(COLLECTED3, T3_SS, T3_ES, T3RAW, T3_BITS);

   if ((Return_Code & 0x80) == 0)               // If no error was detected
   {
      // Check character array for SS, ES, Parity, and LRC
      Return_Code = TrackErrorCheck(Return_Code, T3_SS, T3_ES, T3_BITS);
   }

   if (Return_Code & 0x80)                      // If an error was detected
   {
      ERRT3 = 1;
      UART_StringOut("\nErrors: ");             // List the errors detected
      UART_CharOut('\n');

      if (Return_Code & 0x01)
      {
         UART_StringOut("\tStart Sentinel not found\n");
      }
      if (Return_Code & 0x02)
      {
         UART_StringOut("\tEnd Sentinel not found\n");
      }
      if (Return_Code & 0x04)
      {
         UART_StringOut("\tLRC incorrect\n");
      }
      if (Return_Code & 0x08)
      {
         UART_StringOut("\tParity error(s)\n");
      }

      UART_StringOut("\nDATA CH3:\n");
      for (colCount = 0; colCount < 128; colCount++)
      {
         UART_CharOut(0x30 + (ASCII_array[colCount]&0x0F));
```


Patent Owner's Ex. 2032
Page 049

```
            ASCII_array[colCount] = 0x30;
         }
         UART_CharOut('\n');
         UART_StringOut("END DATA CH3\n");
      }
      else                                          // No errors, print T3 data
      {
         ERRT3 = 0;
         UART_StringOut("\nDATA CH3:\n");

         for (colCount = 0; colCount < Return_Code; colCount++)
         {
            UART_CharOut(0x30 + (ASCII_array[colCount]&0x0F));
            ASCII_array[colCount] = 0x30;
         }
         UART_CharOut('\n');
         UART_StringOut("END DATA CH3\n");
      }

      // Print the RAW data for Track 3
      UART_StringOut("\nRAW COLLECTION CH3:\n0x");

      for (colCount = 0; colCount < COLLECTED3; colCount++)
      {
         UART_HexOut (T3RAW[colCount]);
      }

      UART_CharOut('\n');
      UART_StringOut("END RAW CH3\n");


      // Signal Error / OK with LEDs
      if (!ERRT1)
      {
         TK1_RED_LED = 0;
         TK1_GRN_LED = 1;
      }
      else
      {
         TK1_RED_LED = 1;
         TK1_GRN_LED = 0;
      }

      // Signal Error / OK with LEDs
      if (!ERRT2)
      {
         TK2_RED_LED = 0;
         TK2_GRN_LED = 1;
      }
      else
      {
         TK2_RED_LED = 1;
         TK2_GRN_LED = 0;
      }

      // Signal Error / OK with LEDs
      if (!ERRT3)
      {
         TK3_RED_LED = 0;
```


Patent Owner's Ex. 2032
Page 050

```
         TK3_GRN_LED = 1;
      }
      else
      {
         TK3_RED_LED = 1;
         TK3_GRN_LED = 0;
      }

#endif // END #if DEBUG

// If DEBUG is ‘0’, only output valid track info
#if !DEBUG

      // Find direction of track1, and decode to character array
      Return_Code = GetDirection(COLLECTED1, T1_SS, T1_ES, T1RAW, T1_BITS);

      if ((Return_Code & 0x80) == 0)               // If no error was detected
      {
         // Check character array for SS, ES, Parity, and LRC
         Return_Code = TrackErrorCheck(Return_Code, T1_SS, T1_ES, T1_BITS);
      }

      if (Return_Code & 0x80)                      // If an error was detected
      {                                            // set the error bit
         ERRT1 = 1;
      }
      else                                         // Otherwise print Track 1
      {
         ERRT1 = 0;
         for (colCount = 0; colCount < Return_Code; colCount++)
         {
            UART_CharOut(0x20 + (ASCII_array[colCount]&0x3F));
            ASCII_array[colCount] = 0x30;
         }
         UART_CharOut(‘\n’);
      }


      // Find direction of track2, and decode to character array
      Return_Code = GetDirection(COLLECTED2, T2_SS, T2_ES, T2RAW, T2_BITS);

      if ((Return_Code & 0x80) == 0)               // If no error was detected
      {
         // Check character array for SS, ES, Parity, and LRC
         Return_Code = TrackErrorCheck(Return_Code, T2_SS, T2_ES, T2_BITS);
      }

      if (Return_Code & 0x80)                      // If an error was detected
      {                                            // set the error bit
         ERRT2 = 1;
      }
      else                                         // Otherwise print Track 2
      {
         ERRT2 = 0;
         for (colCount = 0; colCount < Return_Code; colCount++)
         {
            UART_CharOut(0x30 + (ASCII_array[colCount]&0x0F));
            ASCII_array[colCount] = 0x30;
         }
```


Patent Owner's Ex. 2032
Page 051

```
      UART_CharOut('\n');
   }

   // Find direction of track3, and decode to character array
   Return_Code = GetDirection(COLLECTED3, T3_SS, T3_ES, T3RAW, T3_BITS);

   if ((Return_Code & 0x80) == 0)              // If no error was detected
   {
      // Check character array for SS, ES, Parity, and LRC
      Return_Code = TrackErrorCheck(Return_Code, T3_SS, T3_ES, T3_BITS);
   }

   if (Return_Code & 0x80)                     // If an error was detected
   {                                           // set the error bit
      ERRT3 = 1;
   }
   else                                        // Otherwise print Track 3
   {
      ERRT3 = 0;
      for (colCount = 0; colCount < Return_Code; colCount++)
      {
         UART_CharOut(0x30 + (ASCII_array[colCount]&0x0F));
         ASCII_array[colCount] = 0x30;
      }
      UART_CharOut('\n');
   }

   // Signal Error / OK with LEDs
   if (!ERRT1)
   {
      TK1_RED_LED = 0;
      TK1_GRN_LED = 1;
   }
   else
   {
      TK1_RED_LED = 1;
      TK1_GRN_LED = 0;
   }

   // Signal Error / OK with LEDs
   if (!ERRT2)
   {
      TK2_RED_LED = 0;
      TK2_GRN_LED = 1;
   }
   else
   {
      TK2_RED_LED = 1;
      TK2_GRN_LED = 0;
   }

   // Signal Error / OK with LEDs
   if (!ERRT3)
   {
      TK3_RED_LED = 0;
      TK3_GRN_LED = 1;
   }
   else
   {
```


Patent Owner's Ex. 2032
Page 052

```
         TK3_RED_LED = 1;
         TK3_GRN_LED = 0;
      }
#endif // END #if !DEBUG

   }  // END while(1)
}  // END main()

//-----------------------------------------------------------------------------
// Initialization Subroutines
//-----------------------------------------------------------------------------

//-----------------------------------------------------------------------------
// PORT_Init
//-----------------------------------------------------------------------------
//
// Configure the Crossbar and GPIO ports.
//
// P0.0 - VREF Input    (analog, skipped)
// P0.4 - UART TX       (push-pull)
// P0.5 - UART RX       (open drain)
// P1.0 - Channel 1+    (analog, skipped)
// P1.1 - Channel 1-    (analog, skipped)
// P1.2 - Channel 2+    (analog, skipped)
// P1.3 - Channel 2-    (analog, skipped)
// P1.4 - Channel 3+    (analog, skipped)
// P1.5 - Channel 3-    (analog, skipped)
// P1.6 - Green LED     (push-pull, skipped)
// P1.7 - Red LED       (push-pull, skipped)
//

void PORT_Init (void)
{
   P0MDOUT |= 0xDC;                    // enable TX and LEDs as push-pull out

   P0MDIN &= ~0x01;                    // VREF analog in
   P1MDIN &= ~0x3F;                    // Enable P1.0 through 1.5 as analog in
   P1MDOUT |= 0xC0;                    // P1.6, 1.7 Push-pull output

   P0SKIP |= 0xCD;                     // Skip VREF pin and LED Outputs
   P1SKIP |= 0xFF;                     // Skip Analog Inputs and LED Outputs

   XBR0    = 0x01;                     // Enable UART on P0.4(RX) and P0.5(TX)
   XBR1    = 0x40;                     // Enable crossbar and enable
                                       // weak pull-ups

   TK1_RED_LED = 0;                    // Turn all LEDs off
   TK1_GRN_LED = 0;
   TK2_RED_LED = 0;
   TK2_GRN_LED = 0;
   TK3_RED_LED = 0;
   TK3_GRN_LED = 0;
}

//-----------------------------------------------------------------------------
// SYSCLK_Init
//-----------------------------------------------------------------------------
//
// This routine initializes the system clock to use the internal oscillator
```


Patent Owner's Ex. 2032
Page 053

```
// at its maximum frequency, enables the Missing Clock Detector and VDD
// monitor.
//

void SYSCLK_Init (void)
{
   OSCICN |= 0x03;                     // Configure internal oscillator for
                                       // its maximum frequency
   RSTSRC = 0x06;                      // Enable missing clock detector and
                                       // VDD Monitor
}

//-----------------------------------------------------------------------------
// ADC0_Init
//-----------------------------------------------------------------------------
//
// Configure ADC0 to use Timer 2 as conversion source, and to initially point
// to Channel 2.  Disables ADC end of conversion interrupt. Leaves ADC
// disabled.
//
void ADC0_Init (void)
{
   ADC0CN = 0x02;                      // ADC0 disabled; Normal tracking
                                       // mode; ADC0 conversions are initiated
                                       // on timer 2

   AMX0P  = T1_CHPOS;                  // Channel 1+
   AMX0N  = T1_CHNEG;                  // Channel 1-

   ADC0CF = (SYSCLK/3000000) << 3;     // ADC conversion clock <= 3MHz

   ADC0CF &= ~0x04;                    // Right-Justify data
   REF0CN = 0x03;                      // VREF = P0.0 internal VREF, bias
                                       // generator is on.

}

//-----------------------------------------------------------------------------
// UART0_Init
//-----------------------------------------------------------------------------
//
// Configure the UART0 using Timer1, for <BAUDRATE> and 8-N-1.
//
void UART0_Init (void)
{
   SCON0 = 0x10;                       // SCON0: 8-bit variable bit rate
                                       //        level of STOP bit is ignored
                                       //        RX enabled
                                       //        ninth bits are zeros
                                       //        clear RI0 and TI0 bits
   if (SYSCLK/BAUDRATE/2/256 < 1) {
      TH1 = -(SYSCLK/BAUDRATE/2);
      CKCON &= ~0x0B;                  // T1M = 1; SCA1:0 = xx
      CKCON |=  0x08;
   } else if (SYSCLK/BAUDRATE/2/256 < 4) {
      TH1 = -(SYSCLK/BAUDRATE/2/4);
      CKCON &= ~0x0B;                  // T1M = 0; SCA1:0 = 01
      CKCON |=  0x01;
   } else if (SYSCLK/BAUDRATE/2/256 < 12) {
```


Patent Owner's Ex. 2032
Page 054

```
      TH1 = -(SYSCLK/BAUDRATE/2/12);
      CKCON &= ~0x0B;                  // T1M = 0; SCA1:0 = 00
   } else {
      TH1 = -(SYSCLK/BAUDRATE/2/48);
      CKCON &= ~0x0B;                  // T1M = 0; SCA1:0 = 10
      CKCON |=  0x02;
   }

   TL1 = TH1;                          // init Timer1
   TMOD &= ~0xf0;                      // TMOD: timer 1 in 8-bit autoreload
   TMOD |=  0x20;
   TR1 = 1;                            // START Timer1
   TI0 = 1;                            // Indicate TX0 ready
}


//-----------------------------------------------------------------------------
// Timer2_Init
//-----------------------------------------------------------------------------
//
// Configure Timer2 to auto-reload at interval specified by <counts> (no
// interrupt generated) using SYSCLK as its time base.
//
void Timer2_Init (int counts)
{
   TMR2CN = 0x00;                      // STOP Timer2; Clear TF2H and TF2L;
                                       // disable low-byte interrupt; disable
                                       // split mode; select internal timebase
   CKCON |= 0x10;                      // Timer2 uses SYSCLK as its timebase

   TMR2RL  = -counts;                  // Init reload values
   TMR2    = TMR2RL;                   // Init Timer2 with reload value
}

//-----------------------------------------------------------------------------
// Support Subroutines
//-----------------------------------------------------------------------------


//-----------------------------------------------------------------------------
// Swipe_Card
//-----------------------------------------------------------------------------
//
// This routine performs the signal detection and data collection when a card
// is swiped through the reader for Track 1 2 and 3.  Interrupts should be
// turned off when this routine runs for optimal performance.
//

unsigned char Swipe_Card(void)
{
unsigned char data zerocount1;                  // Zero counter - Track 1
unsigned char data bytecount1;                  // Raw data counter - TK 1
unsigned char data zerocount2;                  // Zero counter - Track 2
unsigned char data bytecount2;                  // Raw data counter - TK 2
unsigned char data zerocount3;                  // Zero counter - Track 3
unsigned char data bytecount3;                  // Raw data counter - TK 3

char data runningsum1 = 0, rsum1_div = 0;       // Filtering variables
char data runningsum2 = 0, rsum2_div = 0;
```


Patent Owner's Ex. 2032
Page 055

```
char data runningsum3 = 0, rsum3_div = 0;

                                                // Minimum / Maximum and
                                                //    next peak values
char data localmax1 = 0, localmin1 = 0, next_peak1 = 0;
char data localmax2 = 0, localmin2 = 0, next_peak2 = 0;
char data localmax3 = 0, localmin3 = 0, next_peak3 = 0;

char data ADC_DATA;                             // Raw ADC Data (low byte)

unsigned int data cyclecount1, cyclecount2,     // Cycle counters
                  cyclecount3;

unsigned int maincycle;                         // Main time stamp for
                                                //   ADC conversions

unsigned int data maxtime1, mintime1;           // Min / Max time stamps
unsigned int data maxtime2, mintime2;
unsigned int data maxtime3, mintime3;

unsigned char data cycleindex1;                 // Index for # of cycles
unsigned char data cycleindex2;                 //   present in sum
unsigned char data cycleindex3;
unsigned int data cyclesum1 = 0;                // Sum over 3 cycles
unsigned int data cyclesum2 = 0;
unsigned int data cyclesum3 = 0;
unsigned int data CP75pct1 = 0, CP150pct1 = 0;  // 75% and 150% comparison
unsigned int data CP75pct2 = 0, CP150pct2 = 0;  //   values
unsigned int data CP75pct3 = 0, CP150pct3 = 0;

bit ZERO_WAIT1, FIRST_ONE1, BIT_RECORD1;        // Bits keep track of stages
bit ZERO_WAIT2, FIRST_ONE2, BIT_RECORD2;        //   in the collection
bit ZERO_WAIT3, FIRST_ONE3, BIT_RECORD3;

bit LASTEDGE1 = 0;                              // State of last edges:
bit LASTEDGE2 = 0;                              //   1 = Positive
bit LASTEDGE3 = 0;                              //   0 = Negative

   maincycle = 0;                               // Reset ADC timestamp
   Timeout_Counter = 0;                         // Reset Timeout Variables
   READ_TIMEOUT = 0;                            // (included for clarity)
   CH2_SWITCH = 0;

   T1RAW[0] = 0;                                // Reset Track1 Variables
   COLLECTED1 = 1;
   ZERO_WAIT1 = 1;
   FIRST_ONE1 = 0;
   BIT_RECORD1 = 0;
   zerocount1 = 0;
   bytecount1 = 0;

   T2RAW[0] = 0;                                // Reset Track2 Variables
   COLLECTED2 = 1;
   ZERO_WAIT2 = 1;
   FIRST_ONE2 = 0;
   BIT_RECORD2 = 0;
   zerocount2 = 0;
   bytecount2 = 0;
```


Patent Owner's Ex. 2032
Page 056

```
T3RAW[0] = 0;                                // Reset Track3 Variables
COLLECTED3 = 1;
ZERO_WAIT3 = 1;
FIRST_ONE3 = 0;
BIT_RECORD3 = 0;
zerocount3 = 0;
bytecount3 = 0;


AMX0P  = T1_CHPOS;                           // Set up AIN+ channel
AMX0N  = T1_CHNEG;                           // Set up AIN- channel

AD0EN = 1;                                   // Enable ADC0
TR2 = 1;                                     // start Timer2

// wait for Timer2 overflow flag - 1st conversion begins
while (!TF2H);
TF2H = 0;                                    // clear timer overflow flag
AMX0P = T2_CHPOS;                            // switch AIN+ channel
AMX0N = T2_CHNEG;                            // switch AIN- channel

while (!READ_TIMEOUT)
{
   Timeout_Counter++;                        // Increment counters
   maincycle++;

   if (CH2_SWITCH)                           // check if CH2 is sampled
   {
      // wait for Timer2 overflow flag
      while (!TF2H);
      AMX0P = T3_CHPOS;                      // switch AIN+ channel
      AMX0N = T3_CHNEG;                      // switch AIN- channel
      ADC_DATA = ADC0L;                      // read current data low byte
      TF2H = 0;                              // clear timer overflow flag
   }
   else
   {
      // wait for Timer2 overflow flag
      while (!TF2H);
      AMX0P = T1_CHPOS;                      // switch AIN+ channel
      AMX0N = T1_CHNEG;                      // switch AIN- channel
      ADC_DATA = ADC0L;                      // read current data low byte
      TF2H = 0;                              // clear timer overflow flag
   }

   // Perform exponential average
   runningsum1 = runningsum1 + ADC_DATA - rsum1_div;
   rsum1_div = runningsum1>>2;

   if (!ZERO_WAIT1)              // Test to see if still waiting for zeros
   {                             // If NOT.. collect data

      if (!LASTEDGE1)            // Test if last edge was negative
      {
         if (runningsum1 > next_peak1)          // Test against peak limit
         {
                                                // Establish new local max
                                                //    and compute min-max
                                                //    peak timing
```


Patent Owner's Ex. 2032
Page 057

```
            localmax1 = runningsum1;
            cyclecount1 += mintime1 - maxtime1;
            next_peak1 = localmax1 - THRESHOLD1;

            if (cyclecount1 <= CP75pct1)        // 1/2 or Full cycle?
            {                                   // **1/2 cycle
               BIT_RECORD1 = 1;
               FIRST_ONE1 = 1;
            }
            else                                // **Full cycle
            {
               cyclesum1 += cyclecount1;        // Update cycle sum
               cycleindex1++;

               if (FIRST_ONE1)                  // If first '1' is found
               {
                  Temp_Byte1 = Temp_Byte1 << 1;
                  Temp1_b0 = BIT_RECORD1;       // Record a bit
                  bytecount1++;
                  BIT_RECORD1 = 0;              // Reset bit value to '0'
               }
               cyclecount1 = 0;                 // Reset cycle counter
               CLEAR_TIMEOUT = 0;               // Keep from timing out
            }
            LASTEDGE1 = 1;                      // Positive edge
         }
         else if (runningsum1 < localmin1)      // Check against local min
         {
            localmin1 = runningsum1;            // Update local min
                                                //   and next peak
            next_peak1 = localmin1 + THRESHOLD1;
            mintime1 = maincycle;               // Time stamp local min
         }
         else                                   // Perform some housekeeping
         {
            if (bytecount1 == 8)                // Store the current byte
            {
               T1RAW[COLLECTED1] = Temp_Byte1;
               bytecount1 = 0;
               COLLECTED1++;
            }
            if (cycleindex1 >= 3)               // Calculate 75% Value
            {
               CP75pct1 = cyclesum1 >> 2;
               cyclesum1 = 0;
               cycleindex1 = 0;
            }
         }
      }
      else                                      // Last edge was positive..
      {
         if (runningsum1 < next_peak1)          // Test against peak limit
         {
                                                // Establish new local min
                                                //    and compute max-min
                                                //    peak timing
            localmin1 = runningsum1;
            cyclecount1 += maxtime1 - mintime1;
            next_peak1 = localmin1 + THRESHOLD1;
```


Patent Owner's Ex. 2032
Page 058

```
            if (cyclecount1 <= CP75pct1)        // 1/2 or Full cycle?
            {                                   // **1/2 cycle
               BIT_RECORD1 = 1;
               FIRST_ONE1 = 1;
            }
            else                                // **Full cycle
            {
               cyclesum1 += cyclecount1;        // Update cycle sum
               cycleindex1++;

               if (FIRST_ONE1)                  // If first '1' is found
               {
                  Temp_Byte1 = Temp_Byte1 << 1;
                  Temp1_b0 = BIT_RECORD1;       // Record a bit
                  bytecount1++;
                  BIT_RECORD1 = 0;              // Reset bit value to '0'
               }
               cyclecount1 = 0;                 // Reset cycle counter
               CLEAR_TIMEOUT = 0;
            }
            LASTEDGE1 = 0;                      // Negative edge
         }
         else if (runningsum1 > localmax1)      // Check against local max
         {
            localmax1 = runningsum1;            // Update local max
                                                //   and next peak
            next_peak1 = localmax1 - THRESHOLD1;
            maxtime1 = maincycle;               // Time stamp local max
         }
         else                                   // Perform some housekeeping
         {
            if (bytecount1 == 8)                // Store the current byte
            {
               T1RAW[COLLECTED1] = Temp_Byte1;
               bytecount1 = 0;
               COLLECTED1++;
            }
            if (cycleindex1 >= 3)               // Calculate 75% Value
            {
               CP75pct1 = cyclesum1 >> 2;
               cyclesum1 = 0;
               cycleindex1 = 0;
            }
         }
      }
   }     // End of data collection code (after Z_LIMIT zeros detected)

   else  // IF ZERO_WAIT1 == 1, still waiting for Z_LIMIT zeros
   {
      CLEAR_TIMEOUT = 0;

      if (!LASTEDGE1)            // Test if last edge was negative
      {
         if (runningsum1 > next_peak1)          // Test against peak limit
         {
                                                // Establish new local max
                                                //    and compute min-max
                                                //    peak timing
```


Patent Owner's Ex. 2032
Page 059

```
            localmax1 = runningsum1;
            cyclecount1 += mintime1 - maxtime1;
            next_peak1 = localmax1 - THRESHOLD1;

            cyclesum1 += cyclecount1;           // Update cycle sum
            cycleindex1++;

            // Check for a value that looks periodic
            if ((cyclecount1 > CP75pct1)&&(cyclecount1 < CP150pct1))
            {
               if (++zerocount1 == Z_LIMIT)     // Count up and check
               {                                // for Z_LIMIT
                  ZERO_WAIT1 = 0;
                  TK1_RED_LED = 1;
                  TK1_GRN_LED = 1;
               }
            }
            else                                // Outside of range
            {
               zerocount1 = 0;                  // Reset zero count
            }

            cyclecount1 = 0;                    // Reset cycle counter
            LASTEDGE1 = 1;                      // Positive edge
         }
         else if (runningsum1 < localmin1)      // Check against local min
         {
            localmin1 = runningsum1;            // Update local min
                                                //   and next peak
            next_peak1 = localmin1 + THRESHOLD1;
            mintime1 = maincycle;               // Time stamp local min
         }
         else                                   // Perform some housekeeping
         {
            if (cycleindex1 >= 3)               // Calculate 75% and 150%
            {
               CP150pct1 = cyclesum1 >> 1;
               CP75pct1 = CP150pct1 >> 1;
               cyclesum1 = 0;
               cycleindex1 = 0;
            }
         }
      }
      else                                      // Last edge was positive
      {
         if (runningsum1 < next_peak1)          // Test against peak limit
         {
                                                // Establish new local min
                                                //    and compute max-min
                                                //    peak timing
            localmin1 = runningsum1;
            cyclecount1 += maxtime1 - mintime1;
            next_peak1 = localmin1 + THRESHOLD1;

            cyclesum1 += cyclecount1;           // Update cycle sum
            cycleindex1++;

            // Check for a value that looks periodic
            if ((cyclecount1 > CP75pct1)&&(cyclecount1 < CP150pct1))
```


Patent Owner's Ex. 2032
Page 060

```
            {
               if (++zerocount1 == Z_LIMIT)     // Count up and check
               {                                // for Z_LIMIT
                  ZERO_WAIT1 = 0;
                  TK1_RED_LED = 1;
                  TK1_GRN_LED = 1;
               }
            }
            else                                // Outside of range
            {
               zerocount1 = 0;                  // Reset zero count
            }
            cyclecount1 = 0;                    // Reset cycle counter
            LASTEDGE1 = 0;                      // Negative edge
         }
         else if (runningsum1 > localmax1)      // Check against local max
         {
            localmax1 = runningsum1;            // Update local max
                                                //   and next peak
            next_peak1 = localmax1 - THRESHOLD1;
            maxtime1 = maincycle;               // Time stamp local max
         }
         else                                   // Perform some housekeeping
         {
            if (cycleindex1 >= 3)               // Calculate 75% and 150%
            {
               CP150pct1 = cyclesum1 >> 1;
               CP75pct1 = CP150pct1 >> 1;
               cyclesum1 = 0;
               cycleindex1 = 0;
            }
         }
      }
   }     // End of Waiting for Zeroes code (before Z_LIMIT reached)


   if (CH2_SWITCH)                              // Check if CH2 is sampled
   {
      // wait for Timer2 overflow flag
      while (!TF2H);
      AMX0P = T1_CHPOS;                         // switch AIN+ channel
      AMX0N = T1_CHNEG;                         // switch AIN- channel
      ADC_DATA = ADC0L;                         // read current data low byte
      TF2H = 0;                                 // clear timer overflow flag

      // Perform exponential average
      runningsum2 = runningsum2 + ADC_DATA - rsum2_div;
      rsum2_div = runningsum2>>2;

      maincycle++;

      if (!ZERO_WAIT2)           // Test to see if still waiting for zeros
      {                          // If NOT.. collect data

         if (!LASTEDGE2)         // Test if last edge was negative
         {
            if (runningsum2 > next_peak2)       // Test against peak limit
            {
                                                // Establish new local max
```


Patent Owner's Ex. 2032
Page 061

```
                                        //    and compute min-max
                                        //    peak timing
            localmax2 = runningsum2;
            cyclecount2 += mintime2 - maxtime2;
            next_peak2 = localmax2 - THRESHOLD2;

            if (cyclecount2 <= CP75pct2)     // 1/2 or Full cycle?
            {                                // **1/2 cycle
               BIT_RECORD2 = 1;
               FIRST_ONE2 = 1;
            }
            else                             // **Full cycle
            {
               cyclesum2 += cyclecount2;     // Update cycle sum
               cycleindex2++;

               if (FIRST_ONE2)               // If first '1' is found
               {
                  Temp_Byte2 = Temp_Byte2 << 1;
                  Temp2_b0 = BIT_RECORD2;    // Record a bit
                  bytecount2++;
                  BIT_RECORD2 = 0;           // Reset bit value to '0'
               }
               cyclecount2 = 0;              // Reset cycle counter
            }
            LASTEDGE2 = 1;                   // Positive edge
         }
         else if (runningsum2 < localmin2)   // Check against local min
         {
                                             // Update local min
            localmin2 = runningsum2;         //   and next peak
            next_peak2 = localmin2 + THRESHOLD2;
            mintime2 = maincycle;            // Time stamp local min
         }
         else                                // Perform some housekeeping
         {
            if (bytecount2 == 8)             // Store the current byte
            {
               T2RAW[COLLECTED2] = Temp_Byte2;
               bytecount2 = 0;
               COLLECTED2++;
            }
            if (cycleindex2 >= 3)            // Calculate 75% Value
            {
               CP75pct2 = cyclesum2 >> 2;
               cyclesum2 = 0;
               cycleindex2 = 0;
            }
         }
      }
      else                                   // Last edge was positive..
      {
         if (runningsum2 < next_peak2)       // Test against peak limit
         {
                                             // Establish new local min
                                             //    and compute max-min
                                             //    peak timing
            localmin2 = runningsum2;
            cyclecount2 += maxtime2 - mintime2;
```


Patent Owner's Ex. 2032
Page 062

```
            next_peak2 = localmin2 + THRESHOLD2;

            if (cyclecount2 <= CP75pct2)     // 1/2 or Full cycle?
            {                                // **1/2 cycle
               BIT_RECORD2 = 1;
               FIRST_ONE2 = 1;
            }
            else                             // **Full cycle
            {
               cyclesum2 += cyclecount2;     // Update cycle sum
               cycleindex2++;

               if (FIRST_ONE2)               // If first '1' is found
               {
                  Temp_Byte2 = Temp_Byte2 << 1;
                  Temp2_b0 = BIT_RECORD2;    // Record a bit
                  bytecount2++;
                  BIT_RECORD2 = 0;           // Reset bit value to '0'
               }
               cyclecount2 = 0;              // Reset cycle counter
            }
            LASTEDGE2 = 0;                   // Negative edge
         }
         else if (runningsum2 > localmax2)   // Check against local max
         {
                                             // Update local max
            localmax2 = runningsum2;         //   and next peak
            next_peak2 = localmax2 - THRESHOLD2;
            maxtime2 = maincycle;            // Time stamp local max

         }
         else                                // Perform some housekeeping
         {
            if (bytecount2 == 8)             // Store the current byte
            {
               T2RAW[COLLECTED2] = Temp_Byte2;
               bytecount2 = 0;
               COLLECTED2++;
            }
            if (cycleindex2 >= 3)            // Calculate 75% Value
            {
               CP75pct2 = cyclesum2 >> 2;
               cyclesum2 = 0;
               cycleindex2 = 0;
            }
         }
      }
   }     // End of data collection code (after Z_LIMIT zeros detected)

   else  // IF ZERO_WAIT2 == 1, still waiting for Z_LIMIT zeros
   {
      if (!LASTEDGE2)         // Test if last edge was negative
      {
         if (runningsum2 > next_peak2)       // Test against peak limit
         {
                                             // Establish new local max
                                             //    and compute min-max
                                             //    peak timing
            localmax2 = runningsum2;
```


Patent Owner's Ex. 2032
Page 063

```
            cyclecount2 += mintime2 - maxtime2;
            next_peak2 = localmax2 - THRESHOLD2;

            cyclesum2 += cyclecount2;        // Update cycle sum
            cycleindex2++;

            // Check for a value that looks periodic
            if ((cyclecount2 > CP75pct2)&&(cyclecount2 < CP150pct2))
            {
               if (++zerocount2 == Z_LIMIT)  // Count up and check
               {                             // for Z_LIMIT
                  ZERO_WAIT2 = 0;
                  TK2_RED_LED = 1;
                  TK2_GRN_LED = 1;
               }
            }
            else                             // Outside of range
            {
               zerocount2 = 0;               // Reset zero count
            }
            cyclecount2 = 0;                 // Reset cycle counter
            LASTEDGE2 = 1;                   // Positive edge
         }
         else if (runningsum2 < localmin2)   // Check against local min
         {
                                             // Update local min
            localmin2 = runningsum2;         //   and next peak
            next_peak2 = localmin2 + THRESHOLD2;
            mintime2 = maincycle;            // Time stamp local min
         }
         else                                // Perform some housekeeping
         {
            if (cycleindex2 >= 3)            // Calculate 75% and 150%
            {
               CP150pct2 = cyclesum2 >> 1;
               CP75pct2 = CP150pct2 >> 1;
               cyclesum2 = 0;
               cycleindex2 = 0;
            }
         }
      }
      else                                   // Last edge was positive
      {
         if (runningsum2 < next_peak2)       // Test against peak limit
         {
                                             // Establish new local min
                                             //    and compute max-min
                                             //    peak timing
            localmin2 = runningsum2;
            cyclecount2 += maxtime2 - mintime2;
            next_peak2 = localmin2 + THRESHOLD2;

            cyclesum2 += cyclecount2;        // Update cycle sum
            cycleindex2++;

            // Check for a value that looks periodic
            if ((cyclecount2 > CP75pct2)&&(cyclecount2 < CP150pct2))
            {
               if (++zerocount2 == Z_LIMIT)  // Count up and check
```


Patent Owner's Ex. 2032
Page 064

```
                {                               // for Z_LIMIT
                   ZERO_WAIT2 = 0;
                   TK2_RED_LED = 1;
                   TK2_GRN_LED = 1;
                }
             }
             else                               // Outside of range
             {
                zerocount2 = 0;                 // Reset zero count
             }
             cyclecount2 = 0;                   // Reset cycle counter
             LASTEDGE2 = 0;                     // Negative edge
          }
          else if (runningsum2 > localmax2)     // Check against local max
          {
                                                // Update local max
             localmax2 = runningsum2;           //   and next peak
             next_peak2 = localmax2 - THRESHOLD2;
             maxtime2 = maincycle;              // Time stamp local max
          }
          else                                  // Perform some housekeeping
          {
             if (cycleindex2 >= 3)              // Calculate 75% and 150%
             {
                CP150pct2 = cyclesum2 >> 1;
                CP75pct2 = CP150pct2 >> 1;
                cyclesum2 = 0;
                cycleindex2 = 0;
             }
          }
       }
   }     // End of Waiting for Zeroes code (before Z_LIMIT reached)

   // wait for Timer2 overflow flag
   while (!TF2H);
   AMX0P = T3_CHPOS;                            // switch AIN+ channel
   AMX0N = T3_CHNEG;                            // switch AIN- channel
   ADC_DATA = ADC0L;                            // read current data low byte
   TF2H = 0;                                    // clear timer overflow flag
}  // End IF CH2_SWITCH

else
{
   // wait for Timer2 overflow flag
   while (!TF2H);
   AMX0P = T2_CHPOS;                            // switch AIN+ channel
   AMX0N = T2_CHNEG;                            // switch AIN- channel
   ADC_DATA = ADC0L;                            // read current data low byte
   TF2H = 0;                                    // clear timer overflow flag
}

// Perform exponential average
runningsum3 = runningsum3 + ADC_DATA - rsum3_div;
rsum3_div = runningsum3>>2;

maincycle++;

if (!ZERO_WAIT3)              // Test to see if still waiting for zeros
{                             // If NOT.. collect data
```


Patent Owner's Ex. 2032
Page 065

```
if (!LASTEDGE3)            // Test if last edge was negative
{
   if (runningsum3 > next_peak3)          // Test against peak limit
   {
                                          // Establish new local max
                                          //    and compute min-max
                                          //    peak timing
      localmax3 = runningsum3;
      cyclecount3 += mintime3 - maxtime3;
      next_peak3 = localmax3 - THRESHOLD3;

      if (cyclecount3 <= CP75pct3)        // 1/2 or Full cycle?
      {                                   // **1/2 cycle
         BIT_RECORD3 = 1;
         FIRST_ONE3 = 1;
      }
      else                                // **Full cycle
      {
         cyclesum3 += cyclecount3;        // Update cycle sum
         cycleindex3++;

         if (FIRST_ONE3)                  // If first '1' is found
         {
            Temp_Byte3 = Temp_Byte3 << 1;
            Temp3_b0 = BIT_RECORD3;       // Record a bit
            bytecount3++;
            BIT_RECORD3 = 0;              // Reset bit value to '0'

         }
         cyclecount3 = 0;                 // Reset cycle counter
      }
      LASTEDGE3 = 1;                      // Positive edge
   }
   else if (runningsum3 < localmin3)      // Check against local min
   {                                      // Update local min
      localmin3 = runningsum3;            //   and next peak
      next_peak3 = localmin3 + THRESHOLD3;
      mintime3 = maincycle;               // Time stamp local min
   }
   else                                   // Perform some housekeeping
   {
      if (bytecount3 == 8)                // Store the current byte
      {
         T3RAW[COLLECTED3] = Temp_Byte3;
         bytecount3 = 0;
         COLLECTED3++;
      }
      if (cycleindex3 >= 3)               // Calculate 75% Value
      {
         CP75pct3 = cyclesum3 >> 2;
         cyclesum3 = 0;
         cycleindex3 = 0;
      }
   }
}
else                                      // Last edge was positive..
{
   if (runningsum3 < next_peak3)          // Test against peak limit
```


Patent Owner's Ex. 2032
Page 066

```
         {
                                              // Establish new local min
                                              //    and compute max-min
                                              //    peak timing
            localmin3 = runningsum3;
            cyclecount3 += maxtime3 - mintime3;
            next_peak3 = localmin3 + THRESHOLD3;

            if (cyclecount3 <= CP75pct3)      // 1/2 or Full cycle?
            {                                 // **1/2 cycle
               BIT_RECORD3 = 1;
               FIRST_ONE3 = 1;
            }
            else                              // **Full cycle
            {
               cyclesum3 += cyclecount3;      // Update cycle sum
               cycleindex3++;

               if (FIRST_ONE3)                // If first '1' is found
               {
                  Temp_Byte3 = Temp_Byte3 << 1;
                  Temp3_b0 = BIT_RECORD3;     // Record a bit
                  bytecount3++;
                  BIT_RECORD3 = 0;            // Reset bit value to '0'
               }
               cyclecount3 = 0;               // Reset cycle counter
            }
            LASTEDGE3 = 0;                    // Negative edge
         }
         else if (runningsum3 > localmax3)    // Check against local max
         {                                    // Update local max
            localmax3 = runningsum3;          //   and next peak
            next_peak3 = localmax3 - THRESHOLD3;
            maxtime3 = maincycle;             // Time stamp local max
         }
         else                                 // Perform some housekeeping
         {
            if (bytecount3 == 8)              // Store the current byte
            {
               T3RAW[COLLECTED3] = Temp_Byte3;
               bytecount3 = 0;
               COLLECTED3++;
            }
            if (cycleindex3 >= 3)             // Calculate 75% Value
            {
               CP75pct3 = cyclesum3 >> 2;
               cyclesum3 = 0;
               cycleindex3 = 0;
            }
         }
      }
   }     // End of data collection code (after Z_LIMIT zeros detected)

   else  // IF ZERO_WAIT3 == 1, still waiting for Z_LIMIT zeros
   {
      if (!LASTEDGE3)            // Test if last edge was negative
      {
         if (runningsum3 > next_peak3)        // Test against peak limit
         {
```


Patent Owner's Ex. 2032
Page 067

```
                                          // Establish new local max
                                          //    and compute min-max
                                          //    peak timing
            localmax3 = runningsum3;
            cyclecount3 += mintime3 - maxtime3;
            next_peak3 = localmax3 - THRESHOLD3;

            cyclesum3 += cyclecount3;           // Update cycle sum
            cycleindex3++;

            // Check for a value that looks periodic
            if ((cyclecount3 > CP75pct3)&&(cyclecount3 < CP150pct3))
            {
               if (++zerocount3 == Z_LIMIT)     // Count up and check
               {                                // for Z_LIMIT
                  ZERO_WAIT3 = 0;
                  TK3_RED_LED = 1;
                  TK3_GRN_LED = 1;
               }
            }
            else                                // Outside of range
            {
               zerocount3 = 0;                  // Reset zero count
            }
            cyclecount3 = 0;                    // Reset cycle counter
            LASTEDGE3 = 1;                      // Positive edge
         }
         else if (runningsum3 < localmin3)      // Check against local min
         {                                      // Update local min
            localmin3 = runningsum3;            //   and next peak
            next_peak3 = localmin3 + THRESHOLD3;
            mintime3 = maincycle;               // Time stamp local min
         }
         else                                   // Perform some housekeeping
         {
            if (cycleindex3 >= 3)               // Calculate 75% and 150%
            {
               CP150pct3 = cyclesum3 >> 1;
               CP75pct3 = CP150pct3 >> 1;
               cyclesum3 = 0;
               cycleindex3 = 0;
            }
         }
      }
      else                                      // Last edge was positive
      {
         if (runningsum3 < next_peak3)          // Test against peak limit
         {
                                                // Establish new local min
                                                //    and compute max-min
                                                //    peak timing
            localmin3 = runningsum3;
            cyclecount3 += maxtime3 - mintime3;
            next_peak3 = localmin3 + THRESHOLD3;

            cyclesum3 += cyclecount3;           // Update cycle sum
            cycleindex3++;

            // Check for a value that looks periodic
```


Patent Owner's Ex. 2032
Page 068

```
            if ((cyclecount3 > CP75pct3)&&(cyclecount3 < CP150pct3))
            {
               if (++zerocount3 == Z_LIMIT)     // Count up and check
               {                                // for Z_LIMIT
                  ZERO_WAIT3 = 0;
                  TK3_RED_LED = 1;
                  TK3_GRN_LED = 1;
               }
            }
            else                                // Outside of range
            {
               zerocount3 = 0;                  // Reset zero count
            }

            cyclecount3 = 0;                    // Reset cycle counter
            LASTEDGE3 = 0;                      // Negative edge

         }
         else if (runningsum3 > localmax3)      // Check against local max
         {                                      // Update local max
            localmax3 = runningsum3;            //   and next peak
            next_peak3 = localmax3 - THRESHOLD3;
            maxtime3 = maincycle;               // Time stamp local max
         }
         else                                   // Perform some housekeeping
         {
            if (cycleindex3 >= 3)               // Calculate 75% and 150%
            {
               CP150pct3 = cyclesum3 >> 1;
               CP75pct3 = CP150pct3 >> 1;
               cyclesum3 = 0;
               cycleindex3 = 0;
            }
         }
      }
   }     // End of Waiting for Zeroes code (before Z_LIMIT reached)
} // End While (!READ_TIMEOUT)

// Finish off last bytes with zeros..
while (bytecount1 < 8)
{
   Temp_Byte1 = Temp_Byte1 << 1;
   Temp1_b0 = 0;                                // record a zero
   bytecount1++;
}
T1RAW[COLLECTED1] = Temp_Byte1;

while (bytecount2 < 8)
{
   Temp_Byte2 = Temp_Byte2 << 1;
   Temp2_b0 = 0;                                // record a zero
   bytecount2++;
}
T2RAW[COLLECTED2] = Temp_Byte2;

while (bytecount3 < 8)
{
   Temp_Byte3 = Temp_Byte3 << 1;
   Temp3_b0 = 0;                                // record a zero
```


Patent Owner's Ex. 2032
Page 069

```
      bytecount3++;
   }
   T3RAW[COLLECTED3] = Temp_Byte3;

   return (1);
}


//-----------------------------------------------------------------------------
// TrackErrorCheck
//-----------------------------------------------------------------------------
//
// This routine checks the decoded track data for Start Sentinel, End Sentinel,
// Parity, and LRC errors.
//

char TrackErrorCheck (unsigned char maxindex, unsigned char StartSen,
   unsigned char EndSen, unsigned char CharBits)
{
unsigned char idata ASCII_Index, ASCII_Mask;
unsigned char idata ASCII_Data, PC_count, Read_LRC = 0, Calc_LRC = 0;
char idata errorcode = 0;
bit ES_Found = 0,  ParityCheck = 0;

   ASCII_Mask = 0x7F >> (8 - CharBits);      // Mask used to separate data info

   if (ASCII_array[0] != StartSen)           // Check for SS at start of array
   {
      errorcode |= 0x81;                     // ERROR - SS is not 1st character
   }

   // Loop through ASCII_array and check each byte for errors
   for (ASCII_Index = 0; ASCII_Index <= maxindex; ASCII_Index++)
   {
      ASCII_Data = ASCII_array[ASCII_Index];
      if (!ES_Found)                         // If ES not found yet
      {
         // LRC Check - XOR's data from all bytes (except the LRC)
         Calc_LRC ^= (ASCII_Data & ASCII_Mask);

         if (ASCII_Data == EndSen)           // If this is the End Sentinel,
         {                                   // treat the next character as
                                             // the LRC, and signal that
                                             // the ES has been found
            Read_LRC = (ASCII_array[ASCII_Index+1] & ASCII_Mask);
            maxindex = ASCII_Index+1;
            ES_Found = 1;
         }
      }

      // Parity Check - checks #1's against Parity bit for ODD parity.
      ParityCheck = 0;                       // Reset parity check variable
      for (PC_count = 0; PC_count < CharBits; PC_count++)
      {
         ParityCheck ^= (ASCII_Data & 0x01);
         ASCII_Data = ASCII_Data >> 1;
      }
      if (ParityCheck == (ASCII_Data & 0x01))
      {
```


Patent Owner's Ex. 2032
Page 070

```
         ASCII_array[ASCII_Index] |= 0x80;   // Mark this byte for ID later
         errorcode |= 0x88;                  // ERROR - Parity error
      }
   }

   // Check that End Sentinel was found in captured data
   if (!ES_Found)
   {
      errorcode |=0x82; // ERROR - End Sentinel never found
   }
   // If ES was found...
   else if (Calc_LRC != (Read_LRC & ASCII_Mask))
   {
      errorcode |= 0x84; // LRC error

      // Parity Check for LRC - checks #1's against Parity bit for ODD parity.
      ParityCheck = 0;                       // Reset parity check variable
      for (PC_count = 0; PC_count < CharBits; PC_count++)
      {
         ParityCheck ^= (Read_LRC & 0x01);
         Read_LRC = Read_LRC >> 1;
      }
      if (ParityCheck == (Read_LRC & 0x01))
      {
         ASCII_array[maxindex] |= 0x80;      // Mark LRC byte for ID later
         errorcode |= 0x88;                  // ERROR - Parity error
      }
   }

   // If no errors were detected, return the number of bytes found.
   // Otherwise, return the error code.
   if (errorcode == 0)
   {
      return ASCII_Index;
   }
   else
   {
      return errorcode;
   }

}

//-----------------------------------------------------------------------------
// DecodeTrackForward
//-----------------------------------------------------------------------------
//
// This routine is used to decode a track into characters, assuming it was
// recorded in the forward direction into the array.
//

char DecodeTrackForward (unsigned char maxindex, unsigned char Byte_Offset,
   unsigned char Bit_Offset, unsigned char *TrackRAW, unsigned char CharBits)
{
unsigned char idata Track_Index = 0;
char idata ASCII_Index = 0, ASCII_Mask;
unsigned char idata Track_Data, ASCII_Data;
unsigned char idata Track_bit, ASCII_bit;

   // Reset temporary variables
```


Patent Owner's Ex. 2032
Page 071

```
   ASCII_bit = 0x01;
   ASCII_Data = 0x00;

   // Generate a bit comparison value for sorting through ASCII bytes
   ASCII_Mask = 0x01 << (CharBits-1);

   // Begin at the specified offset, and proceed until the end of the track
   for (Track_Index = Byte_Offset; Track_Index <= maxindex; Track_Index++)
   {
      // Grab a byte of raw data
      Track_Data = TrackRAW[Track_Index];

      // Unpack raw data byte into character(s)
      for (Track_bit = Bit_Offset; Track_bit != 0x00; Track_bit = Track_bit>>1)
      {
         if (Track_bit & Track_Data)
         {
            ASCII_Data |= ASCII_bit;
         }
         else
         {
            ASCII_Data &= ~ASCII_bit;
         }
         if (ASCII_bit != ASCII_Mask)
         {
            ASCII_bit = ASCII_bit << 1;
         }
         else
         {
            ASCII_bit = 0x01;
            ASCII_array[ASCII_Index] = ASCII_Data;

            if ((ASCII_Data == 0x00)||(ASCII_Index == 126))
            {
               Track_Index = maxindex;       // end translation
            }

            ASCII_Index++;
         }
      }
   }

   // Return the number of characters unpacked
   return (ASCII_Index);

}

//-----------------------------------------------------------------------------
// DecodeTrackBackward
//-----------------------------------------------------------------------------
//
// This routine is used to decode a track into characters, assuming it was
// recorded in the backward direction into the array.
//
char DecodeTrackBackward (unsigned char Byte_Offset, unsigned char Bit_Offset,
   unsigned char *TrackRAW, unsigned char CharBits)
{
unsigned char idata Track_Index;
char idata ASCII_Index = 0, ASCII_Mask;
```


Patent Owner's Ex. 2032
Page 072

```
unsigned char idata Track_Data, ASCII_Data;
unsigned char idata ASCII_bit;


   // Reset temporary variables
   ASCII_bit = 0x01;
   ASCII_Data = 0x00;

   // Generate a bit comparison value for sorting through ASCII bytes
   ASCII_Mask = 0x01 << (CharBits-1);

   // Begin at the specified offset, and proceed until the beginning
   for (Track_Index = Byte_Offset; Track_Index != 0x00; Track_Index--)
   {
      // Grab a byte of raw data
      Track_Data = TrackRAW[Track_Index];

      // Unpack raw data byte into character(s)
      while (Bit_Offset != 0x00)
      {
         if (Bit_Offset & Track_Data)
         {
            ASCII_Data |= ASCII_bit;
         }
         else
         {
            ASCII_Data &= ~ASCII_bit;
         }
         if (ASCII_bit != ASCII_Mask)
         {
            ASCII_bit = ASCII_bit << 1;
         }
         else
         {
            ASCII_bit = 0x01;
            ASCII_array[ASCII_Index] = ASCII_Data;
            ASCII_Data = 0;
            ASCII_Index++;
         }
         Bit_Offset = Bit_Offset << 1;
      }
      Bit_Offset = 0x01;
   }

   // Finish off last byte with trailing zeros
   ASCII_Mask = ASCII_Mask << 1;
   while (ASCII_bit != ASCII_Mask)
   {
      ASCII_Data &= ~ASCII_bit;
      ASCII_bit = ASCII_bit << 1;
   }
   ASCII_array[ASCII_Index] = ASCII_Data;

   // Return the number of characters unpacked
   return (ASCII_Index);

}
```


Patent Owner's Ex. 2032
Page 073

```
//-----------------------------------------------------------------------------
// GetDirection
//-----------------------------------------------------------------------------
//
// This routine determines which direction data was collected from the magnetic
// stripe and calls the appropriate decoding routine.
//

char GetDirection (unsigned char maxindex, unsigned char StartSen,
   unsigned char EndSen, unsigned char *TrackRAW, unsigned char CharBits)
{

unsigned char idata FW_Byte_Off, FW_Bit_Off, RV_Byte_Off, RV_Bit_Off;
unsigned char idata Read_Char, Bit_Count, Temp_Char, Temp_Bit, Temp_Mask;
char idata MAX_Decoded;
bit FW_StartSen, RV_StartSen, Direction_Found = 0, Abort_Direction = 0;

   // Initialize Index Pointers
   FW_Byte_Off = 1;
   FW_Bit_Off = 0x80;
   RV_Byte_Off = maxindex;
   RV_Bit_Off = 0x01;


   while ((Direction_Found == 0)&&(Abort_Direction == 0))
   {
      // Read a byte at FW pointer
      Read_Char = TrackRAW[FW_Byte_Off];

      // Find the next ‘1’ Forward
      while ((FW_Byte_Off != RV_Byte_Off)&&((Read_Char & FW_Bit_Off) == 0))
      {
         FW_Bit_Off = FW_Bit_Off >> 1;
         if (FW_Bit_Off == 00)
         {
            FW_Bit_Off = 0x80;
            FW_Byte_Off++;
            Read_Char = TrackRAW[FW_Byte_Off];
         }
      }

      if (FW_Byte_Off == RV_Byte_Off)
      {
         Abort_Direction = 1;
      }

      Temp_Bit = 0x02;
      Temp_Char = 0x01;
      Temp_Mask = FW_Bit_Off;

      for (Bit_Count = 1; Bit_Count < CharBits; Bit_Count++)
      {
         Temp_Mask = Temp_Mask >> 1;
         if (Temp_Mask == 0x00)
         {
            Temp_Mask = 0x80;
            Read_Char = TrackRAW[FW_Byte_Off+1];
         }
         if (Read_Char & Temp_Mask)
```


Patent Owner's Ex. 2032
Page 074

```
      {
         Temp_Char |= Temp_Bit;
      }
      else
      {
         Temp_Char &= ~Temp_Bit;
      }
      Temp_Bit = Temp_Bit << 1;
   }

   // Check character against Start Sentinel
   if (Temp_Char == StartSen)
   {
      FW_StartSen = 1;
   }
   else
   {
      FW_StartSen = 0;
   }

   // Read a byte at RV pointer
   Read_Char = TrackRAW[RV_Byte_Off];

   // Find the next '1' Reverse
   while ((FW_Byte_Off != RV_Byte_Off)&&((Read_Char & RV_Bit_Off) == 0))
   {
      RV_Bit_Off = RV_Bit_Off << 1;
      if (RV_Bit_Off == 00)
      {
         RV_Bit_Off = 0x01;
         RV_Byte_Off--;
         Read_Char = TrackRAW[RV_Byte_Off];
      }
   }

   if (FW_Byte_Off == RV_Byte_Off)
   {
      Abort_Direction = 1;
   }

   Temp_Bit = 0x02;
   Temp_Char = 0x01;
   Temp_Mask = RV_Bit_Off;

   for (Bit_Count = 1; Bit_Count < CharBits; Bit_Count++)
   {
      Temp_Mask = Temp_Mask << 1;
      if (Temp_Mask == 0x00)
      {
         Temp_Mask = 0x01;
         Read_Char = TrackRAW[RV_Byte_Off-1];
      }
      if (Read_Char & Temp_Mask)
      {
         Temp_Char |= Temp_Bit;
      }
      else
      {
         Temp_Char &= ~Temp_Bit;
```


Patent Owner's Ex. 2032
Page 075

```
      }
      Temp_Bit = Temp_Bit << 1;
   }

   // Check character against Start Sentinel
   if (Temp_Char == StartSen)
   {
      RV_StartSen = 1;
   }
   else
   {
      RV_StartSen = 0;
   }

   if (FW_StartSen ^ RV_StartSen)
   {
      Direction_Found = 1;
   }
   else if (FW_StartSen && RV_StartSen)
   {
      //*** Check for ES Backwards in front
      Temp_Bit = 0x80;
      Temp_Char = 0x00;
      Temp_Mask = FW_Bit_Off;

      MAX_Decoded = FW_Byte_Off; // MAX_Decoded used as temporary storage
      if ((Temp_Mask >> CharBits) != 0x00)
      {
         Temp_Mask = Temp_Mask >> CharBits;
      }
      else
      {
         FW_Byte_Off++;
         Temp_Mask = Temp_Mask << (8 - CharBits);
      }

      Read_Char = TrackRAW[FW_Byte_Off];
      for (Bit_Count = 0; Bit_Count < CharBits; Bit_Count++)
      {
         if (Read_Char & Temp_Mask)
         {
            Temp_Char |= Temp_Bit;
         }
         else
         {
            Temp_Char &= ~Temp_Bit;
         }
         Temp_Bit = Temp_Bit >> 1;

         Temp_Mask = Temp_Mask >> 1;
         if (Temp_Mask == 0x00)
         {
            Temp_Mask = 0x80;
            Read_Char = TrackRAW[FW_Byte_Off+1];
         }
      }
      FW_Byte_Off = MAX_Decoded; // Restore FW_Byte_Off

      Temp_Char = Temp_Char >> (8 - CharBits);
```


Patent Owner's Ex. 2032
Page 076

```
         // Check character against End Sentinel
         // If found here, track is reverse.
         if (Temp_Char == EndSen)
         {
            FW_StartSen = 0;
         }
         //otherwise, it is forward
         else
         {
            RV_StartSen = 0;
         }

         Direction_Found = 1;
      }
      else if (!Abort_Direction)
      {
         FW_Bit_Off = FW_Bit_Off >> 1;
         if (FW_Bit_Off == 00)
         {
            FW_Bit_Off = 0x80;
            FW_Byte_Off++;
         }
         RV_Bit_Off = RV_Bit_Off << 1;
         if (RV_Bit_Off == 00)
         {
            RV_Bit_Off = 0x01;
            RV_Byte_Off--;
         }

         if (FW_Byte_Off >= RV_Byte_Off)
         {
            Abort_Direction = 1;
         }
      }

   }  // End while((Direction_Found == 0)&&(Abort_Direction == 0))

   if ((Direction_Found)&&(!Abort_Direction))
   {
      if (FW_StartSen)
      {
         MAX_Decoded = DecodeTrackForward(maxindex, FW_Byte_Off, FW_Bit_Off,
            TrackRAW, CharBits);
      }
      else if (RV_StartSen)
      {
         MAX_Decoded = DecodeTrackBackward(RV_Byte_Off, RV_Bit_Off,
            TrackRAW, CharBits);
      }
   }
   else
   {
      MAX_Decoded = 0x81;                    // Could not find Start Sentinel
   }

   return (MAX_Decoded);

}
```


Patent Owner's Ex. 2032
Page 077

```
//-----------------------------------------------------------------------------
// UART_CharOut
//-----------------------------------------------------------------------------
//
// This routine sends a single character to the UART.  It is used in lieu of
// printf() to reduce overall code size.
//

void UART_CharOut (unsigned char c)
{
   if (c == '\n')
   {
      while (!TI0);
      TI0 = 0;
      SBUF0 = 0x0d;                   /* output CR  */
   }
   while (!TI0);
   TI0 = 0;
   SBUF0 = c;
}

//-----------------------------------------------------------------------------
// UART_StringOut
//-----------------------------------------------------------------------------
//
// This routine calls the UART_CharOut repeatedly to send a string value to the
// UART.  It is used in lieu of printf() to reduce overall code size.
//

void UART_StringOut (unsigned char *c)
{
   while (*c != 0x00)
   {
      UART_CharOut(*c);
      c++;
   }
}


#if DEBUG
//-----------------------------------------------------------------------------
// UART_HexOut
//-----------------------------------------------------------------------------
//
// This routine sends the hexadecimal value of a character to the UART as ASCII
// text. Only used when DEBUG = 1.
//
void UART_HexOut (unsigned char c)
{
   while (!TI0);
   TI0 = 0;
   if ((c & 0xF0) < 0xA0)
      SBUF0 = ((c >> 4) & 0x0F) + 0x30;
   else
      SBUF0 = ((c >> 4) & 0x0F) + 0x37;

   while (!TI0);
   TI0 = 0;
   if ((c & 0x0F) < 0x0A)
```


Patent Owner's Ex. 2032
Page 078

```
      SBUF0 = (c & 0x0F) + 0x30;
   else
      SBUF0 = (c & 0x0F) + 0x37;

}
#endif   // END #if DEBUG
```


Patent Owner's Ex. 2032
Page 079

DOCUMENT CHANGE LIST:

Revision 1.2 to Revision 1.3

- Corrected code in Appendix E-Firmware Listing for 2-Channel Example.
- Corrected code in Appendix F-Firmware Listing for 3-Channel Example.

Patent Owner's Ex. 2032
Page 080

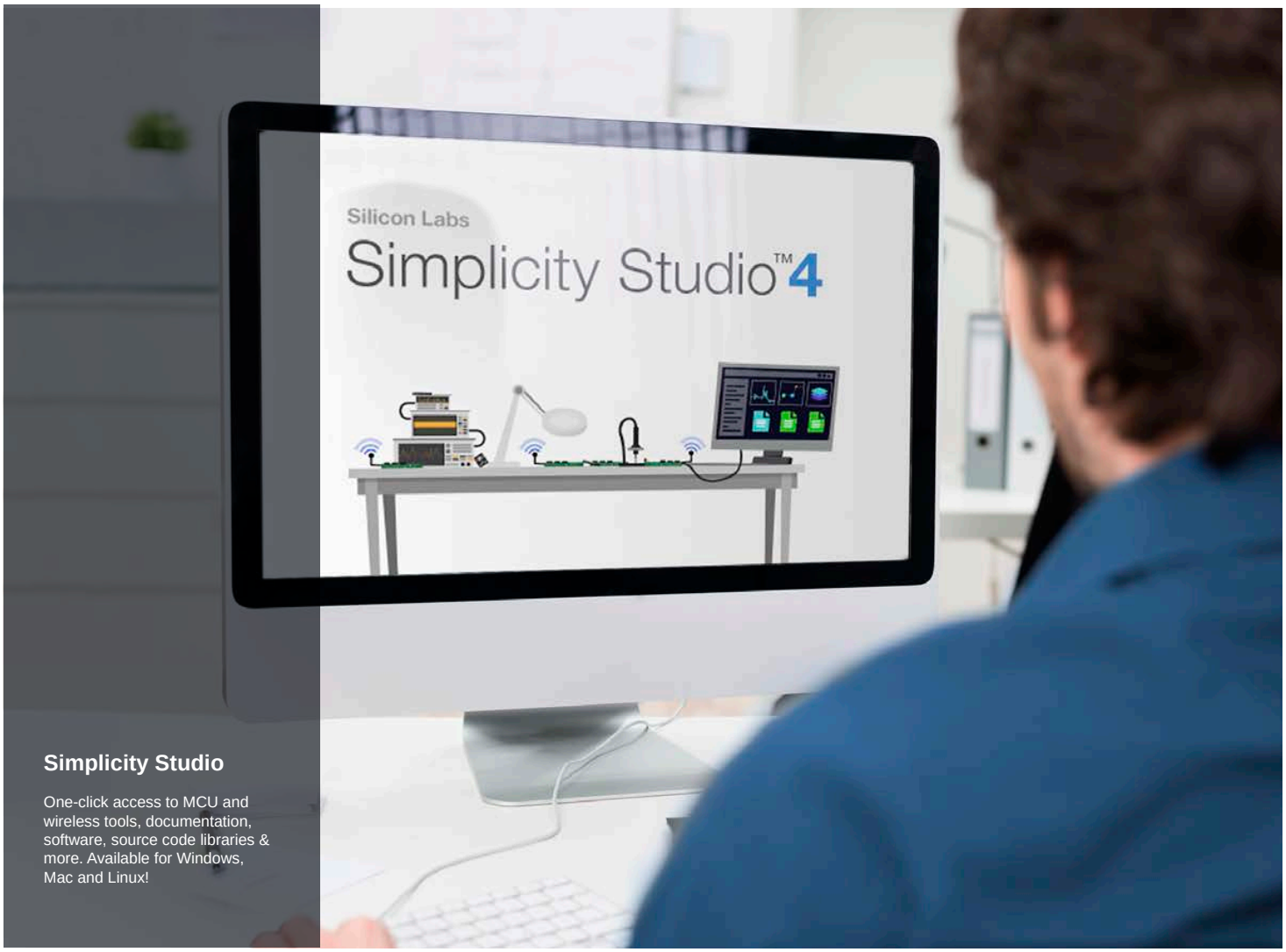

Simplicity Studio

One-click access to MCU and wireless tools, documentation, software, source code libraries & more. Available for Windows, Mac and Linux!

IoT Portfolio
www.silabs.com/IoT

SW/HW
www.silabs.com/simplicity

Quality
www.silabs.com/quality

Support and Community
community.silabs.com

Disclaimer
Silicon Labs intends to provide customers with the latest, accurate, and in-depth documentation of all peripherals and modules available for system and software implementers using or intending to use the Silicon Labs products. Characterization data, available modules and peripherals, memory sizes and memory addresses refer to each specific device, and "Typical" parameters provided can and do vary in different applications. Application examples described herein are for illustrative purposes only. Silicon Labs reserves the right to make changes without further notice and limitation to product information, specifications, and descriptions herein, and does not give warranties as to the accuracy or completeness of the included information. Silicon Labs shall have no liability for the consequences of use of the information supplied herein. This document does not imply or express copyright licenses granted hereunder to design or fabricate any integrated circuits. The products are not designed or authorized to be used within any Life Support System without the specific written consent of Silicon Labs. A "Life Support System" is any product or system intended to support or sustain life and/or health, which, if it fails, can be reasonably expected to result in significant personal injury or death. Silicon Labs products are not designed or authorized for military applications. Silicon Labs products shall under no circumstances be used in weapons of mass destruction including (but not limited to) nuclear, biological or chemical weapons, or missiles capable of delivering such weapons.

Trademark Information
Silicon Laboratories Inc.® , Silicon Laboratories®, Silicon Labs®, SiLabs® and the Silicon Labs logo®, Bluegiga®, Bluegiga Logo®, Clockbuilder®, CMEMS®, DSPLL®, EFM®, EFM32®, EFR, Ember®, Energy Micro, Energy Micro logo and combinations thereof, "the world's most energy friendly microcontrollers", Ember®, EZLink®, EZRadio®, EZRadioPRO®, Gecko®, ISOmodem®, Precision32®, ProSLIC®, Simplicity Studio®, SiPHY®, Telegesis, the Telegesis Logo®, USBXpress® and others are trademarks or registered trademarks of Silicon Labs. ARM, CORTEX, Cortex-M3 and THUMB are trademarks or registered trademarks of ARM Holdings. Keil is a registered trademark of ARM Limited. All other products or brand names mentioned herein are trademarks of their respective holders.

SILICON LABS

Silicon Laboratories Inc.
400 West Cesar Chavez
Austin, TX 78701
USA

http://www.silabs.com