US009709995B2

(12) **United States Patent**
Gutierrez et al.

(10) **Patent No.: US 9,709,995 B2**
(45) **Date of Patent: Jul. 18, 2017**

(54) **CHEMICAL INJECTION SYSTEM**

(71) Applicant: **Dresser, Inc.**, Addison, TX (US)

(72) Inventors: **Francisco M. Gutierrez**, Houston, TX (US); **Richard D. Atton**, Houston, TX (US)

(73) Assignee: **Dresser, Inc.**, Addison, TX (US)

(*) Notice: Subject to any disclaimer, the term of this patent is extended or adjusted under 35 U.S.C. 154(b) by 16 days.

(21) Appl. No.: **14/579,141**

(22) Filed: **Dec. 22, 2014**

(65) **Prior Publication Data**

US 2015/0105909 A1 Apr. 16, 2015

Related U.S. Application Data

(63) Continuation of application No. 12/794,898, filed on Jun. 7, 2010, now abandoned.

(60) Provisional application No. 61/184,890, filed on Jun. 8, 2009.

(51) **Int. Cl.**

G05D 11/13	(2006.01)
G05B 15/02	(2006.01)
E21B 33/068	(2006.01)
G05D 7/06	(2006.01)

(52) **U.S. Cl.**

CPC ***G05D 11/13*** (2013.01); ***E21B 33/068*** (2013.01); ***G05B 15/02*** (2013.01); ***G05D 7/0617*** (2013.01); ***G05D 11/132*** (2013.01)

(58) **Field of Classification Search**

CPC F17D 3/01; F17D 3/12; F17D 3/18; F17D 3/145; G05D 11/138; G05D 11/132; G05D 15/02

See application file for complete search history.

(56) **References Cited**

U.S. PATENT DOCUMENTS

4,196,169	A	4/1980	Gablin et al.
5,104,621	A	4/1992	Pfost
5,108,703	A	4/1992	Pfost
5,125,748	A	6/1992	Bjornson et al.
5,139,744	A	8/1992	Kowalski
5,333,675	A	8/1994	Mullis
5,411,065	A	5/1995	Meador

(Continued)

OTHER PUBLICATIONS

Inaudi, Daniele; Long-Range Pipeline Monitoring by Distributed Fiber Optic Sensing Feb. 2010.*

(Continued)

Primary Examiner — Brian R Gordon

(74) *Attorney, Agent, or Firm* — Paul Frank + Collins P.C.

(57) **ABSTRACT**

A chemical injection system includes a pump in fluid communication with a chemical reservoir and a pipeline; a motor coupled to the pump and adapted to drive the pump to transfer a chemical fluid from the reservoir to the pipeline; a motor controller electrically coupled to a power module and the motor and adapted to adjust a rotational speed of the motor; and a central controller communicably coupled to the motor controller and a remote computing device. The controller includes a translator adapted to receive a signal from the remote computing device in a first communication protocol and translate the signal from the remote computing device to a command in a second communication protocol distinct from the first communication protocol, where the command is operable to adjust the motor controller to adjust the rotational speed of the motor.

8 Claims, 5 Drawing Sheets

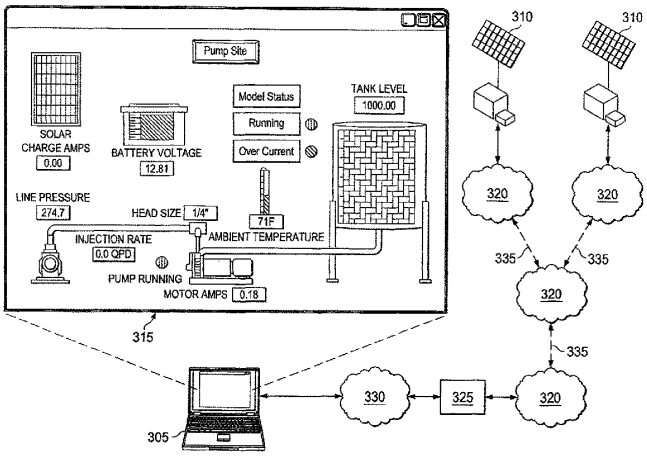

(56) **References Cited**

U.S. PATENT DOCUMENTS

5,428,470	A	6/1995	Labriola	
5,656,493	A	8/1997	Mullis	
5,772,963	A	6/1998	Cantatore	
5,908,599	A	6/1999	Behringer	
5,961,923	A	10/1999	Nova	
6,063,339	A	5/2000	Tisone et al.	
6,093,574	A	7/2000	Druyor-Sanchez	
6,416,713	B1	7/2002	Ford	
6,644,848	B1	11/2003	Clayton et al.	
6,851,444	B1	2/2005	Kohl et al.	
7,234,524	B2	6/2007	Shaw et al.	
7,378,058	B2	5/2008	Lemme	
7,389,787	B2	6/2008	Means et al.	
7,526,944	B2 *	5/2009	Sabata	G01N 17/00 702/113
7,711,486	B2	5/2010	Thigpen et al.	
7,815,871	B2	10/2010	Pamula	
7,878,250	B2	2/2011	Sheldon	
7,939,017	B2	5/2011	Uffenheimer	
7,939,021	B2	5/2011	Smith	
7,939,584	B2	5/2011	Harris et al.	
8,012,768	B2	9/2011	Jafari	
8,066,946	B2	11/2011	Redmond	
8,076,928	B2 *	12/2011	Nunally	F17D 5/00 324/220
8,147,773	B2	4/2012	Lemme	
2009/0095351	A1	4/2009	Greening et al.	
2010/0304018	A1	12/2010	Achour et al.	

OTHER PUBLICATIONS

Oil and Gas Online; Pipeline Moniotring System, http:www.oilandgasonline.com/doc/pipeline-monitoring-system-0001; 1996-2016.*

Jawhar, Imad; A Routing Protocol and Addressing Scheme for Oi, Gas, and Water Pipeline Monitoring Using Wireless Sensor Networks; 2008.*

* cited by examiner

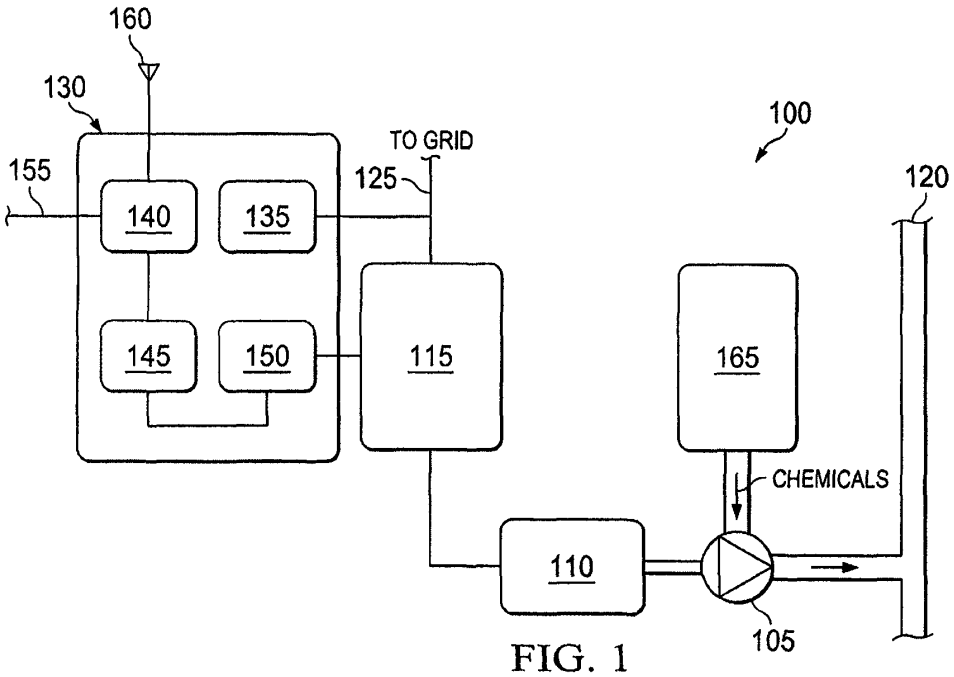
160
130
155
140
135
145
150
TO GRID
125
115
100
120
165
CHEMICALS
110
105

FIG. 1

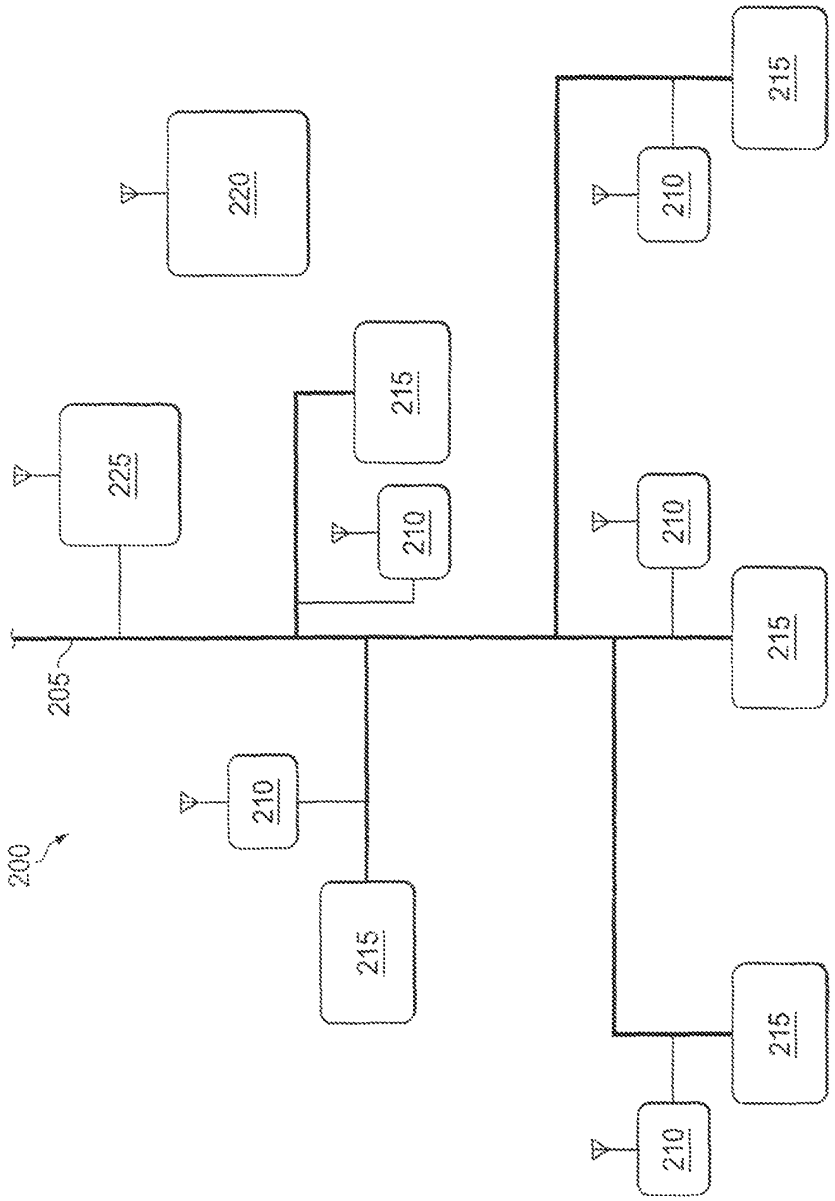

FIG. 2

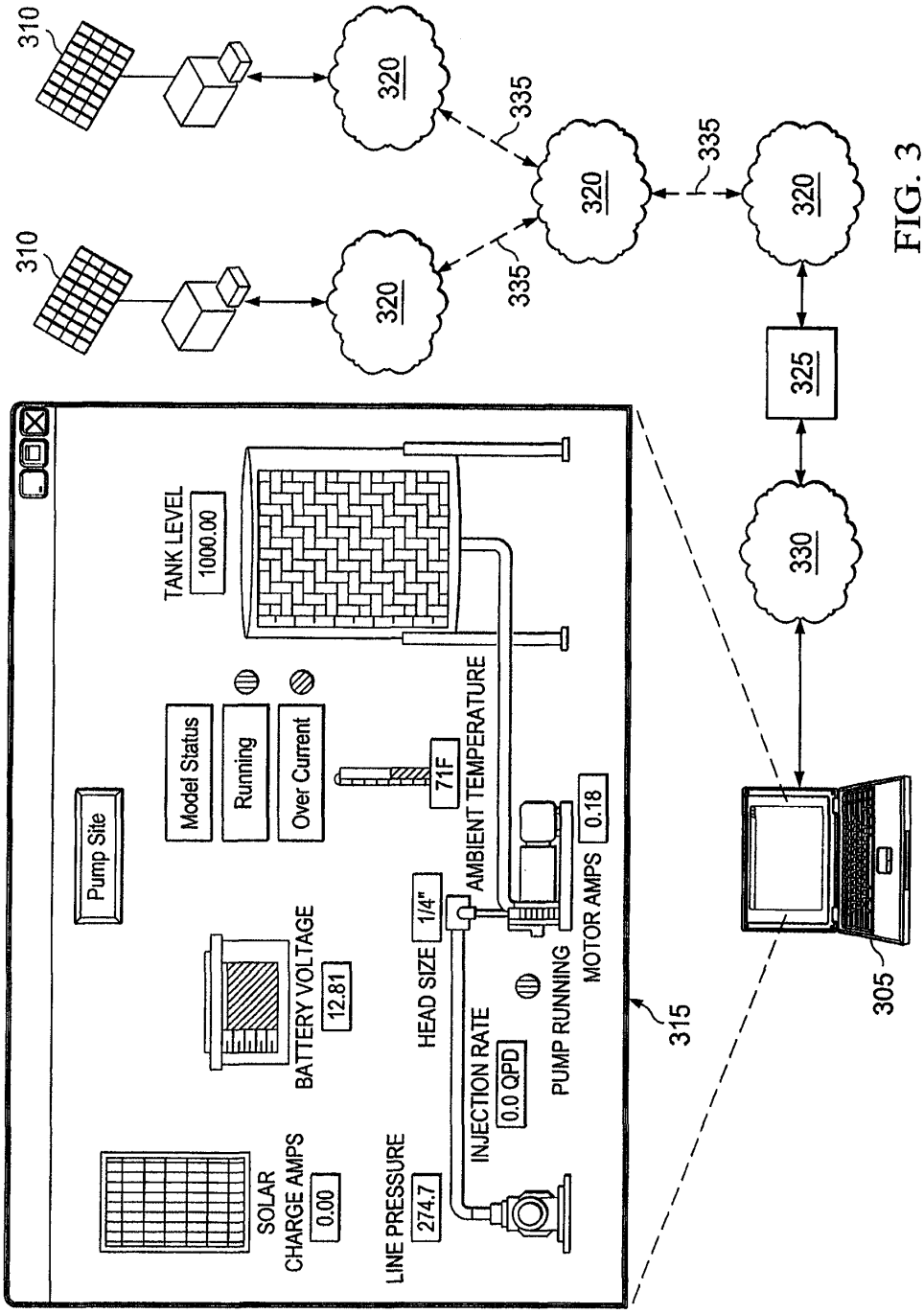
310
310
320
320
320
320
335
335
335
325
330
305
315
Pump Site
Model Status
Running
Over Current
TANK LEVEL
1000.00
71F
AMBIENT TEMPERATURE
0.18
MOTOR AMPS
PUMP RUNNING
1/4"
HEAD SIZE
INJECTION RATE
0.0 QPD
BATTERY VOLTAGE
12.81
SOLAR
CHARGE AMPS
0.00
LINE PRESSURE
274.7

FIG. 3

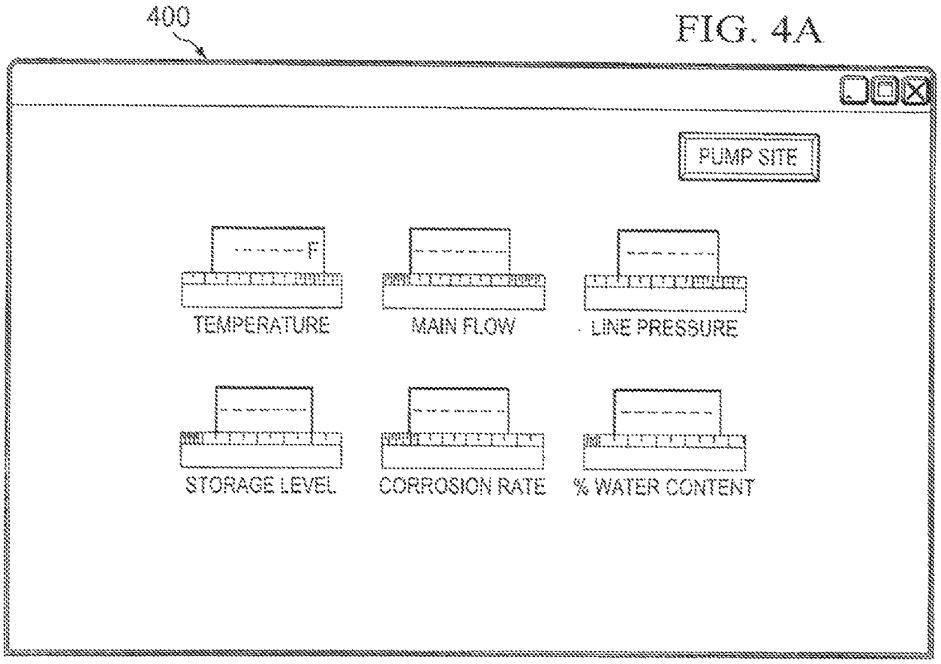
400
PUMP SITE
F
TEMPERATURE
MAIN FLOW
LINE PRESSURE
STORAGE LEVEL
CORROSION RATE
% WATER CONTENT

FIG. 4A

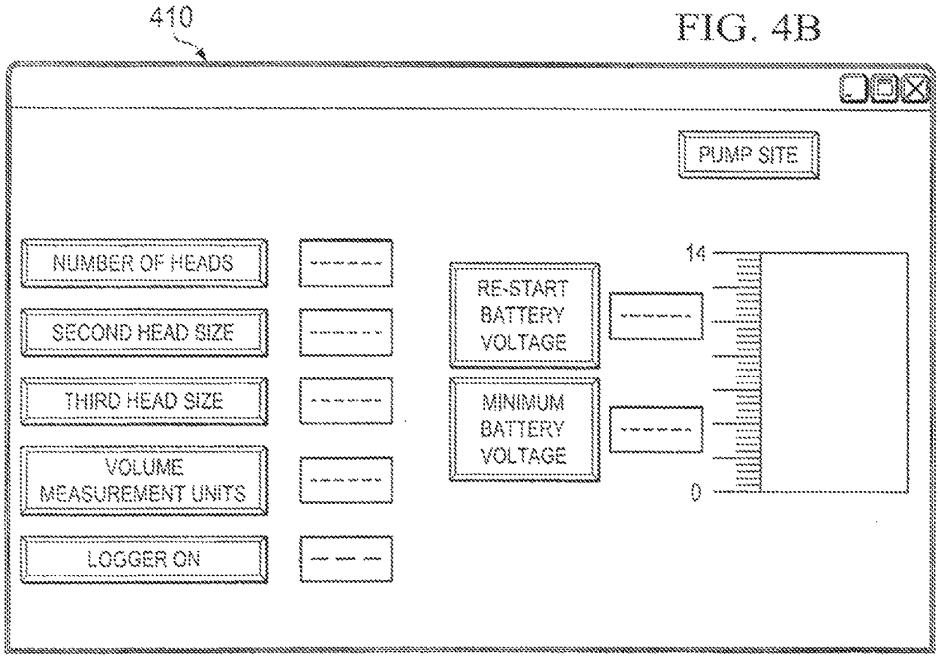
410
PUMP SITE
NUMBER OF HEADS
SECOND HEAD SIZE
THIRD HEAD SIZE
VOLUME MEASUREMENT UNITS
LOGGER ON
RE-START BATTERY VOLTAGE
MINIMUM BATTERY VOLTAGE
14
0

FIG. 4B

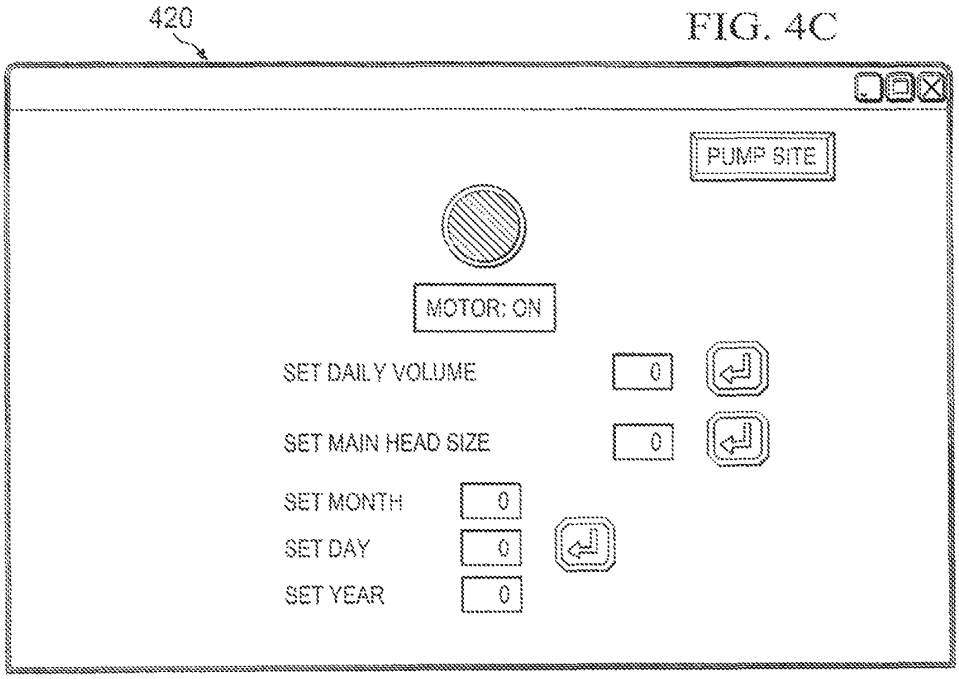
420
PUMP SITE
MOTOR: ON
SET DAILY VOLUME
0
SET MAIN HEAD SIZE
0
SET MONTH
0
SET DAY
0
SET YEAR
0

FIG. 4C

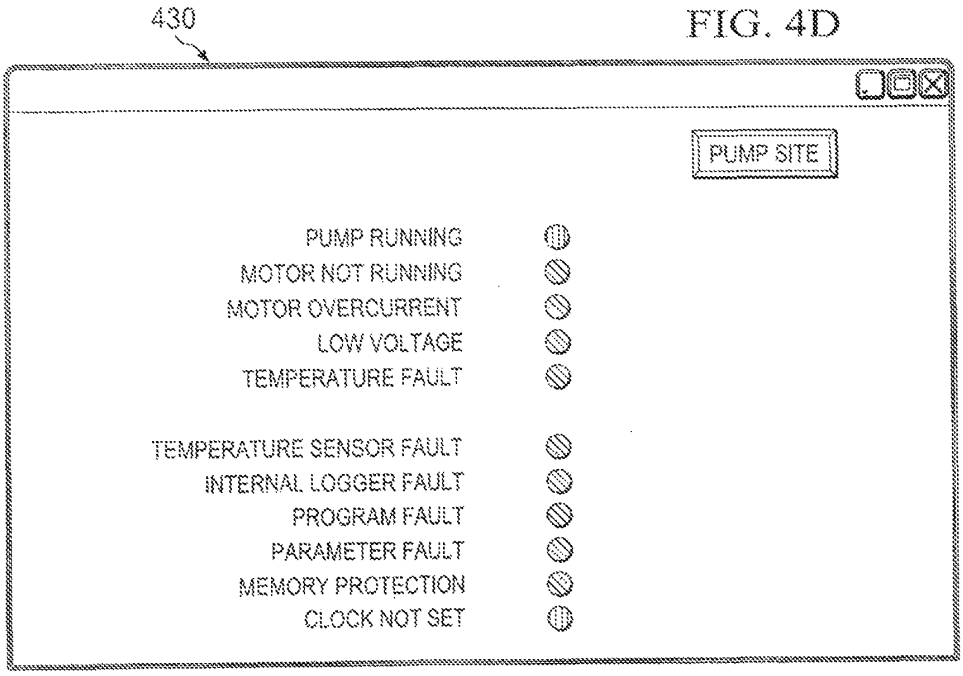
430
PUMP SITE
PUMP RUNNING
MOTOR NOT RUNNING
MOTOR OVERCURRENT
LOW VOLTAGE
TEMPERATURE FAULT
TEMPERATURE SENSOR FAULT
INTERNAL LOGGER FAULT
PROGRAM FAULT
PARAMETER FAULT
MEMORY PROTECTION
CLOCK NOT SET

FIG. 4D

CHEMICAL INJECTION SYSTEM

CROSS-REFERENCE TO RELATED APPLICATIONS

This application is a continuation of U.S. patent application Ser. No. 12/794,898, filed on Jun. 7, 2010, and entitled "CHEMICAL INJECTION SYSTEM," which claims the benefit of priority to U.S. Provisional Application Ser. No. 61/184,890, filed on Jun. 8, 2009.

BACKGROUND

This disclosure relates to a chemical injection system and, more particularly, to a chemical injection system controlled through remote communications via one or more communication protocols.

Conduit systems that carry and/or transport one or more fluids may utilize injection systems to insert other fluids (e.g., additives, inhibitors, or otherwise) into the conduit system. For example, hydrocarbon systems that transport hydrocarbon fluids, such as oil and/or gas or other fluids, often receive injected fluids in order to, for example, control corrosion within the conduit or pipeline; prevent paraffin deposition; and break emulsions in the transported hydrocarbon fluids. The injected fluids may also be used for water removal or separation from hydrocarbon gasses or liquids. In some instances, a chemical injector may be associated with a wellsite or other hydrocarbon production facility in order to inject chemical additives into a pipeline fluidly coupled at the wellsite with a wellbore producing hydrocarbons. The chemical injector may periodically inject a set amount of chemical additives into the pipeline at predetermined intervals in order to maintain a desired amount of such additives within the pipeline. In such instances, however, the chemical injector may simply inject the additives on a timer system without regard to certain variables such as, for example, the flow rate through the pipeline the amount (percentage concentration) of additives already within the transported hydrocarbon fluids in the pipeline, possible problems within the pipeline or production facility, and/or a desired or required increase in the set amount of additives injected into the pipeline. Further, the chemical injector may have no ability to communicate with other equipment and/or monitoring systems in order to take account of such variables. If communication is possible, however, equipment and/or monitoring systems communicably coupled with the chemical injector may not transmit data and/or instructions in a protocol readily understood by the chemical injector, or vice versa.

BRIEF DESCRIPTION OF THE INVENTION

In one general embodiment, a method for controlling a chemical injection system for a hydrocarbon transmission system includes providing a chemical injection system. The chemical injection system includes a pump driven by a motor and in fluid communication with a chemical reservoir and the hydrocarbon transmission system, where the pump is adapted to inject one or more chemical fluids into the hydrocarbon transmission system. The chemical injection system includes a motor controller coupled to the motor and adapted to control operation of the motor, and a controller communicably coupled to the motor controller. The method includes receiving an operational command at the chemical injection system in a first communication protocol from a remote computer; translating, at the controller, the operational command at the first communication protocol to an operational command at a second communication protocol different than the first communication protocol; transmitting the operational command at the second communication protocol from the controller to the motor controller; and adjusting the motor controller to control the operation of the motor in response to receiving the operational command at the second communication protocol from the controller.

In another general embodiment, a chemical injection system for a hydrocarbon pipeline includes: a pump in fluid communication with a chemical reservoir and the pipeline; a motor coupled to the pump and adapted to drive the pump to transfer a chemical fluid from the reservoir to the pipeline; a motor controller electrically coupled to a power module and the motor and adapted to adjust a rotational speed of the motor, and a central controller communicably coupled to the motor controller and a remote computing device. The controller includes a translator adapted to receive a signal from the remote computing device in a first communication protocol and translate the signal from the remote computing device to a command in a second communication protocol distinct from the first communication protocol, where the command is operable to adjust the motor controller to adjust the rotational speed of the motor.

In another general embodiment, a system includes: a remote computing system comprising a graphical user interface (GUI); a sensor coupled with a hydrocarbon transmission system; and a chemical injection system. The chemical injection system includes: a pump in fluid communication with a chemical reservoir and the hydrocarbon transmission system; a motor coupled to the pump and adapted to drive the pump to transfer a chemical fluid from the reservoir to the hydrocarbon transmission system; a power module adapted to receive solar power and convert the solar power to electrical power, a motor controller electrically coupled to the power module and the motor and adapted to adjust a rotational speed of the motor, and a central controller communicably coupled to the motor controller and communicably coupled to the remote computing system and the sensor. The controller includes a translator adapted to receive a signal from the remote computing system in a first communication protocol and translate the signal from the remote computing system to a command in a second communication protocol distinct from the first communication protocol, where the command operable to adjust the motor controller to adjust the rotational speed of the motor.

In one aspect of one or more general embodiments, a method may further include receiving a second operational command at the chemical injection system in a third communication protocol from the remote computer translating, at the controller, the second operational command at the third communication protocol to second operational command at the second communication protocol different than the third communication protocol; transmitting the second operational command at the second communication protocol from the controller to the motor controller, and adjusting the motor controller to control the operation of the motor in response to receiving the second operational command at the second communication protocol from the controller.

In one aspect of one or more general embodiments, a method may further include monitoring at least one parameter of the hydrocarbon transmission system by the chemical injection system; transmitting the parameter to the remote computer, and receiving a fourth operational command at one of the first or third communication protocols from the remote computer in response to the parameter.

In one aspect of one or more general embodiments, the parameter may include one of the following: a fluidic pressure in the hydrocarbon transmission system; a fluidic flowrate in the hydrocarbon transmission system; a percentage concentration by weight or volume of chemical fluid in the hydrocarbon transmission system; an operational parameter of the motor; a controller temperature; a battery voltage; a motor current; a solar cell charge current; and one or more fault conditions.

In one aspect of one or more general embodiments, a method may further include measuring the parameter with a sensor positioned in the hydrocarbon transmission system; and wirelessly transmitting a signal representative of the parameter from the sensor to the chemical injection system.

In one aspect of one or more general embodiments, chemical additives may include at least one of: a corrosion inhibitor; a paraffin inhibiter; a demulsifier, an ethanol; and a foamer.

In one aspect of one or more general embodiments, receiving an operational command at the chemical injection system in a first communication protocol from a remote computer may include receiving an operational command at the chemical injection system in a first communication protocol from a remote computer via a radio frequency RF signal.

In one aspect of one or more general embodiments, a method may further include receiving a signal representative of a sensed parameter of the hydrocarbon transmission system in the second communication protocol; translating the parameter in the second communication protocol to a signal representative of the sensed parameter in the first communication protocol; and transmitting the signal representative of the sensed parameter in the first communication protocol to the remote computer.

In one aspect of one or more general embodiments, adjusting the motor controller to control the operation of the motor in response to receiving the operational command at the second communication protocol from the controller may include adjusting a rotational speed of the motor.

In one aspect of one or more general embodiments, a method may further include providing a sensor coupled to the hydrocarbon transmission system and adapted to monitor an operational parameter of the system; receiving a signal representative of the operational parameter at the controller from the sensor; and automatically adjusting the motor controller to adjust a rotational speed of the motor in response to receiving the signal representative of the operational parameter.

In one aspect of one or more general embodiments, a method may further include providing a second chemical injection system; receiving a third operational command at the second chemical injection system in the first communication protocol from the remote computer, translating, at the second controller, the third operational command at the first communication protocol to a third operational command at the second communication; transmitting the third operational command at the second communication protocol from the second controller to the second motor controller, and adjusting the second motor controller to control the operation of the second motor in response to receiving the third operational command at the second communication protocol from the second controller. The second chemical injection system may include: a second pump driven by a second motor and in fluid communication with the chemical reservoir and the hydrocarbon transmission system, where the second pump is adapted to inject one or more chemical fluids into the hydrocarbon transmission system; a second motor controller coupled to the second motor and adapted to control operation of the second motor, and a second controller communicably coupled to the second motor controller.

In one aspect of one or more general embodiments, the motor controller may include a variable frequency drive.

In one aspect of one or more general embodiments, the translator may be further adapted to receive a signal from the remote computing device in a third communication protocol and translate the signal from the remote computing device to a second command in the second communication protocol distinct from the third and the first communication protocols, where the second command is operable to adjust the motor controller to adjust the rotational speed of the motor.

In one aspect of one or more general embodiments, a system may further include a receiver communicably coupled to the central controller and adapted to receive the signal from the remote computing device, the signal comprising a radio frequency (RF) signal.

In one aspect of one or more general embodiments, the receiver may be adapted to receive a second signal from a remote sensor coupled to the pipeline.

In one aspect of one or more general embodiments, the controller may be further adapted to receive the second signal from the remote sensor through the receiver and transmit the second signal to the remote computing device.

In one aspect of one or more general embodiments, the translator may be adapted to receive the second signal from the receiver, the second signal in the second communication protocol, and translate the second signal to a third signal in the first communication protocol.

In one aspect of one or more general embodiments, the second communication protocol may include a Modbus protocol.

In one aspect of one or more general embodiments, the GUI may be adapted to display one or more operational parameters of the chemical injection system.

In one aspect of one or more general embodiments, a system may further include a transceiver communicably coupled to the remote computing station through a communications network, the transceiver in RF communication with the chemical injection system.

In one aspect of one or more general embodiments, a system may further include one or more communication stations in RF communication with the chemical injection system and the transceiver, where each communication station is adapted to relay operational parameters of the chemical injection system in the form of RF signals between the transceiver and the chemical injection system.

In one aspect of one or more general embodiments, a system may further include: a second sensor coupled with the hydrocarbon transmission system; and a second chemical injection system. The second chemical injection system may include a pump in fluid communication with the chemical reservoir and the hydrocarbon transmission system: a motor coupled to the pump and adapted to drive the pump to transfer the chemical fluid from the reservoir to the hydrocarbon transmission system: a power module; a motor controller electrically coupled to the power module and the second motor and adapted to adjust a rotational speed of the motor; and a central controller communicably coupled to the motor controller and to the remote computing system and the second sensor. The controller may include a translator adapted to receive a signal from the remote computing system in the first communication protocol and translate the signal from the remote computing system to a command in the second communication protocol distinct from the first

communication protocol, where the command is operable to adjust the motor controller to adjust the rotational speed of the motor.

One or more of the above-described embodiments, as well as other embodiments described herein, may include one or more of the following features. For example, a chemical injection system may be remotely controlled through wired or wireless communication. A chemical injection system may be able to receive data in the form of a particular communication protocol and translate such data into a separate and distinct protocol. A chemical injection system may be able to reduce waste of chemicals injected into a hydrocarbon pipeline upon loss of pipeline pressure due to breaks or leaks. A chemical injection system may include a stand-alone power generation module obviating the need for electrical power from a municipal, city, or state power grid. A hydrocarbon transmission system including one or more chemical injection systems may more efficiently inject chemical additives into the system by monitoring the amount of additives present in the system, thereby preventing waste. Further, a hydrocarbon transmission system including one or more chemical injection systems may account for relative distances between production sites and pipeline monitoring locations in order to efficiently inject chemical additives into the system without waste. Additionally, a hydrocarbon transmission system including one or more chemical injection systems may monitor the amounts of injected chemical remaining in one or more chemical fluid reservoirs in order to avoid such injection units running out of chemicals.

These general and specific aspects may be implemented using a device, system or method, or any combinations of devices, systems, or methods. The details of one or more embodiments are set forth in the accompanying drawings and the description below. Other features, objects, and advantages will be apparent from the description and drawings, and from the claims.

BRIEF DESCRIPTION OF THE DRAWINGS

FIG. **1** illustrates a block diagram of one embodiment of a chemical injection system in accordance with the present disclosure;

FIG. **2** illustrates a block diagram of a hydrocarbon production system utilizing one or more chemical injection systems in accordance with the present disclosure;

FIG. **3** illustrates a schematic drawing of an example system for managing one or more chemical injection systems in accordance with the present disclosure; and

FIGS. **4**A-D illustrate example graphical user interfaces (GUI) for use in a system for managing one or more chemical injection systems in accordance with the present disclosure.

DETAILED DESCRIPTION

In one embodiment, a chemical injection system for a hydrocarbon transmission system includes a pumping system adapted to inject a specified amount of chemical additive into the transmission system; and a controller communicably coupled to the pumping system and adapted to receive one or more operational parameters of the transmission system and transmit a command to the pumping system based on the one or more operational parameters, where the pumping system injects the specified amount in response to the command.

In another embodiment, a chemical injection system for a hydrocarbon transmission system includes a pumping system adapted to inject a specified amount of chemical additive into the transmission system; and a controller communicably coupled to the pumping system and adapted to receive one or more operational parameters of the transmission system in a first communication protocol and transmit a command to the pumping system based on the one or more operational parameters, where the pumping system injects the specified amount in response to the command. The command is in a second communication protocol distinct from the first protocol.

In another embodiment, a chemical injection system for a hydrocarbon transmission system includes a pumping system adapted to inject a specified amount of chemical additive into the transmission system; and a controller communicably coupled to the pumping system and a remote data source. The controller is adapted to receive one or more operational parameters of the transmission system from the remote data source and transmit a command to the pumping system based on the one or more operational parameters, where the pumping system injects the specified amount in response to the command.

In another embodiment, a hydrocarbon transmission system includes a pipeline adapted to enclose a fluid transmitted from a plurality of hydrocarbon production sites to a processing site and a plurality of chemical injection systems. Each injection system includes a pumping system adapted to inject a specified amount of chemical additive into the pipeline; and a controller communicably coupled to the pumping system and adapted to receive one or more operational parameters of the pipeline and transmit a command to the pumping system based on the one or more operational parameters, where the pumping system injects the specified amount in response to the command. The hydrocarbon transmission system further includes a data capture apparatus remote from the plurality of chemical injection systems and coupled to the pipeline, the data capture apparatus adapted to detect the one or more operational parameters and transmit the parameters to at least one of the plurality of chemical injection systems, where the one or more operational parameters include a distance between the data capture apparatus and the plurality of chemical injection systems.

FIG. **1** illustrates a block diagram of one embodiment of a chemical injection system **100** in accordance with the present disclosure. Chemical injection system **100**, typically, includes a pump **105** mechanically coupled to a driver, such as a motor **110**; a motor controller **115**; a controller **130**, and a chemical reservoir **165**. In some embodiments, the controller **130** may be a single unit integrating a motor-controller, controller, and a data acquisition module. Alternatively, at least one of the data acquisition module (not shown) and motor-controller may be separate from the controller **130**. In one preferred embodiment, the chemical injection system **100** may be utilized in a hydrocarbon production system, such as, for example, a field or area having one or more hydrocarbon (e.g., oil, natural gas) production sites. Chemical injection system **100** may be used in such embodiments to inject or otherwise introduce chemicals (e.g., corrosion inhibitors, ethanol, foamer, paraffin inhibiter, demulsifier, or other chemical) into a hydrocarbon conduit, such as a pipeline **120** or wellbore. In some embodiments, for example, an appropriate amount of chemicals, such as a predetermined volumetric amount, an amount per unit volume of fluid flowing through a pipeline, or an amount sufficient to keep a measured pipeline parameter within in a

particular range, may be injected into the pipeline **120** or other hydrocarbon transmission apparatus.

Pump **105** is fluidly coupled to the pipeline **120** and the reservoir **165** and, generally, draws a specified amount of chemical stored in the reservoir **165** and injects the chemical into the pipeline **120** at predefined time intervals, predetermined operating conditions, and/or when commanded. Pump **105** may be any appropriate fluid displacement device, such as, for example, a centrifugal pump, diaphragm pump, or other rotary fluid displacement apparatus, or a positive displacement (e.g., piston or plunger) pump, such as a reciprocating pump. In any event, reference to the pump **105** includes all fluid displacement apparatus operable to receive a fluid at an inlet and impart mechanical energy to the fluid for transporting the fluid through an outlet. In the illustrated embodiment, pump **105** receives chemicals from the reservoir **165** and introduces the chemical into the pipeline **120**; alternatively, chemicals may be received at the pump **105** through a separate pipeline or conduit, as appropriate.

In some embodiments, pump **105** may be constructed with particular materials in order to prevent corrosion or deterioration due to the flow of chemical fluid through the pump **105**. For instance, one or more components of pump **105** may be constructed of stainless steel (e.g., 316), titanium, or any other non-corrosive material, as appropriate.

Motor **110** is mechanically coupled to the pump **105** and provides power to the pump **105** for fluid displacement. In some embodiments, the motor **110** includes a weatherproof enclosure or design, and is adapted to function in environmentally extreme (e.g., snow, rain, heat) and hazardous conditions. For example, motor **110** may be a totally-enclosed fan cooled (TEFC), totally-enclosed air over (TEAO), hazardous duty, and/or explosion proof motor. In any event, motor **110** may include the appropriate NEMA (National Electrical Manufacturers Association) rating for operating requirements in an outdoor, hydrocarbon production area.

Motor controller **115** is electrically coupled to the motor **110** and, typically, controls the supply of phased power (e.g., 120/3/60, 460/3/60, 208/3/60, 240/1/60, 50 Hertz, DC: 12/24/48/96/single or three phase/brushed or brushless) to the motor **110**. Motor controller **115** receives electrical power, in some embodiments, from an area power supply, such as a municipal or state power grid, through the power supply **125**. Alternatively, or in addition, the motor controller **115** may receive electrical power through the power supply from a power module **135**, which may be enclosed in, integral with, or separate from the controller **130**. For instance, in some embodiments, the power module **135** may be a solar power module, operable to convert solar energy to electrical power. Other forms of power generation (e.g., wind, natural gas, hydroelectric, etc.) may also be used, as appropriate. Power module **135** may also be a battery, such as a lithium, zinc-carbon, gel cell, full cell, or alkaline cell battery, as appropriate. In one preferred embodiment, the power module **135** may be the primary source of electrical power to the motor controller **115** (and thus motor **110**), with the power grid as a secondary power source should there be problems or a failure of the power module **135**. Alternatively, in some embodiments, the power grid may be the primary source of electrical power to the motor controller **115** with the power module **135** serving as the secondary source of electrical power. Further, in some embodiments, the power module **135** could be a combined solar module and battery.

Motor controller **115** is electrically coupled to the motor **110** and, typically, provides and controls electrical power to the motor **110** for operation of the pump **105**. In some embodiments, motor controller **110** may be a combination starter/disconnect, which provides "on-off" control of electrical power to the motor **110**. In such embodiments, the motor **110** may be operated as a constant (or single) speed motor. Alternatively, the motor controller **115** may also be a variable frequency controller, operable to provide electrical power to motor **110** at a variety of frequencies (and thus rotational motor speeds) as system operating conditions warrant. As with the motor **110**, motor controller **115** may be enclosed or otherwise protected against environmental and/or hazardous operating conditions.

Controller **130** is communicably coupled to the motor controller **115** and, typically, provides microprocessor-based control of the motor controller **115** and thus motor **110** and pump **105**. The controller **130** includes a communication module **140**, a translation module **145**, motor driver, data acquisition, data storage, and a processor **150**. As illustrated in FIG. **1**, these components may be enclosed or integrated with controller **130**. Alternatively, one or more of the communication module **140**, translation module **145**, processor **150**, and also the power module **135** may be in separate enclosures but communicably coupled in between. Generally, controller **130** receives inputs and/or instructions and commands from a remote source and, according to the commands, controls the operation and/or speed of the motor **110** and pump **105** to inject chemicals into the pipeline **120**. Alternatively, the controller **130** may be a stand alone controller with preset programs and schedules to execute. For example, the controller **130** may receive data representative of pipeline conditions, such as line pressure, amount of chemicals present in the pipeline **120**, and motor operating conditions, and in turn, control the pump **105** to inject more or less chemicals into the pipeline **120**.

The controller **130**, in some preferred embodiments, may include a combination of software, middleware, and hardware configured as the communication module **140**, translation module **145**, and processor **150**. Controller **130** may further include one or more memory devices (not shown) located therein or communicably coupled to the controller **130**. In some embodiments, for example, such memory may be any database module and may take the form of volatile or non-volatile memory including, without limitation, magnetic media, optical media, random access memory (RAM), read-only memory (ROM), removable media, or any other suitable local or remote memory component. The memory may also include any other appropriate data such as data classes or object interfaces, and software sub-applications or sub-systems.

In certain embodiments, for example, the controller **130** may store in memory and execute one or more software applications written or described in any appropriate computer language including C, C-++, Java, Visual Basic, assembler, Perl, any suitable version of 4GL, as well as others. Such applications may be executed by the processor **150** located within or communicably coupled to the controller **130**. Processor **150** executes instructions and manipulates data to perform the operations of the controller **130**. The processor **150** may be, for example, a central processing unit (CPU), a blade, an application specific integrated circuit (ASIC), or a field-programmable gate array (FPGA). Although the present disclosure contemplates a single processor **150** in controller **130**, multiple processors may be

used according to particular needs, and reference to a single processor **150** is meant to include multiple processors where applicable.

In some embodiments, the controller **130** is communicably coupled to a communication bus **155** at the communication module **140**. The communication bus **140**, generally, is a wired communication connection operable to carry data between the communication module and a remote source, such as one or more electronic sensors monitoring the pipeline **120**, the motor **110**, the pump **105**, or other component or apparatus. In any event, communication bus **155** is a non-limiting example of wired communications between the system **100** and a remote data source.

Alternatively or in addition to the communication bus **155**, system **100** may include a wireless antenna **160** operable to facilitate electronic communication between the controller **130** and a remote source. Wireless antenna **160** may communicate through any appropriate wireless technique, such as, for example, radio frequency (RF), WiFi, microwave, and any appropriate IEEE standard technique. In one embodiment, for example, wireless sensors may detect various operational parameters of the pipeline **120**, such as line pressure and/or chemical concentrate, and transmit such data to the controller **130** via the wireless antenna **160**.

The communication module **140** receives and/or transmits data between a remote source via one or both of the communication bus **155** and wireless antenna **160**. In some embodiments, only one of the bus **155** and antenna **160** is utilized in the system **100**. For example, the communication module **140** may be a wireless modem operable to receive and transmit electronic data and signals from and to the remote source through the wireless antenna **160**.

Translation module **145** is communicably coupled to the communication module **140** and the processor **150**. Typically, translation module **145** receives data communicated in a particular communication protocol to the system **100** via the communication bus **155** and/or wireless antenna **160** and, when necessary, translates such data to a secondary communication protocol understood by the motor controller **115** or other components of the system **100**. For instance, data may be sent to the controller **130** in many different protocols, such as RS-232, RS-485 (Modbus or EIA-485), RS-422 (or EIA-422), TCP/IP, Fieldbus, DeviceNet, and Profibus, to name but a few. The motor controller **115** may be configured to receive data in only one, or just a few, protocols (e.g., a version of the Modbus serial communication protocol, such as Modbus RTU, Modbus ASCII, Modbus TCP/IP, Modbus TCP, Modbus over TCP/IP, Modbus over TCP, and/or Modbus Plus). Thus, the translation module **145** allows a remote source of data to be transmitted to the control **130** in a remote protocol without regard to the particular protocol understood by the motor controller **115**.

Further, in some embodiments, the translation module **145** may allow a user or operator to connect to the controller **130** and receive feedback data (e.g., operational data of the motor **110**, pump **105**, or any other component of the system **100**) without regard to a particular protocol understood by the user's device (i.e., computer, laptop, PDA, cell phone). In other words, the translation module **145** may perform two-way protocol translation between the system **100** and the user or operator. In such fashion, the user or operator may seamlessly communicate with the system **100** without any additional action required on the user's part.

Processor **150** performs any logical operation necessary for controlling, operating, or otherwise managing the system **100**, and in particular, the motor controller **115** and thus motor **110** and pump **105**. For instance, the processor **150** may receive one or more data signals representative of, for example, pipeline fluid line pressure, pipeline fluid flowrate, pipeline chemical percentage concentrate by volume or by weight, motor operating parameter (e.g., amp draw, voltage, winding temperature) and transmit commands to the motor controller **115** based on such data. As one specific example, a wireless pressure sensor may be installed at a particular location in the pipeline **120**. The sensor may periodically transmit the sensed line pressure to the controller **130** via the wireless antenna **160**. When such sensed pressure falls below a minimum threshold, such as when a pipeline break occurs, the processor **150** may command the motor controller **115** to stop or reduce the speed of the motor **110** and pump **105** so that additional chemicals are not injected into the pipeline **120** and wasted.

FIG. **2** illustrates a block diagram of a hydrocarbon production system **200** utilizing one or more chemical injection systems **210** in accordance with the present disclosure. In some embodiments, for instance, the one or more chemical injection systems **210** may be substantially similar to chemical injection system **100**. System **200** includes one or more hydrocarbon production sites **215**, each of which is fluidly coupled to a pipeline **205**. At one or more of the sites **215**, a chemical injection system **210** is also in fluid communication with the pipeline **205** and operates in accordance with the chemical injection system **100** described above. At a main (or side) branch of the pipeline **205**, a monitoring module **225** detects one or more operational parameters of the hydrocarbon stream within the pipeline **205**. The system **200** also includes a remote control center **220**. As illustrated in FIG. **2**, the chemical injection systems **210**, monitoring module **225**, and remote control center **220** may all be in wireless communication. Further, although a particular number of sites **215**, injection systems **210**, monitoring module **225**, and control center **220** are shown, more or less of each component, as appropriate, may be utilized in keeping with the present disclosure.

In some embodiments, the production system **200** may operate as follows. Monitoring module **225** may include a number of wireless sensor devices operable to detect one or more operational parameters of the hydrocarbon stream within the pipeline **205**. For instance, the module **225** may detect the relative amount of chemical additives injected into the pipeline **205** by the one or more chemical injection systems **210**. Such data may be wirelessly transmitted directly to each chemical injection system **210** and/or the remote control center **220**. In some embodiments, the data is communicated to the remote control center **220**, where it is then processed. The remote control center **220** may then wirelessly issue commands to one or more of the chemical injection systems **210**. Such commands may include a command to stop injecting chemical additive into the pipeline **205** and/or a command to inject a specified amount of chemical additive into the pipeline **205**. Thus, in some embodiments, some or all of the processing of data and command generation may occur at the remote control center **220** rather than each individual chemical injection system **210**. In certain embodiments, the remote control center **220** may control one or more chemical injection systems **210** without regard to data received from the monitoring module **225**. For instance, the remote control center **220** may issue commands to the chemical injection systems **210** to inject the chemical additives into the pipeline **205** at set intervals. Alternatively, the remote control center **220** may merely monitor and/or store data wirelessly communicated directly to the chemical injection systems **210** from the monitoring

module **225**. Upon receipt of such data, the chemical injection systems **210** may process the data and inject more or less chemical additive into the pipeline **205**, as appropriate (as described above with reference to FIG. **1**).

Further, in some embodiments, the remote control center **220** and/or the chemical injection systems **210** may account for the length of pipeline **205** between a particular chemical injection system **210** and the monitoring module **225**. For instance, particular chemical injection systems **210** that are further away from the monitoring module **225** may inject more chemical additive into the pipeline **205** as compared to chemical injection systems **210** that are closer to the monitoring module **225**. This may, in some embodiments, help ensure that the amount of chemical additive in the pipeline **205** is uniformly consistent.

FIG. **3** illustrates a schematic drawing of an example system **300** for managing one or more chemical injection systems **310**. In the illustrated embodiment, the system **300** includes a computer **305** displaying a graphical user interface (GUI) **315**, one or more remote chemical injection systems **310**, and a base transceiver **325**. Generally, system **300** may be used to detect one or more operational parameters of a hydrocarbon stream within a pipeline (such as pipeline **205**) and inject chemicals (e.g., corrosion inhibitors, ethanol, foamer) into the pipeline in response to or independent of the detected operational parameters. In addition, the system **300** may all for microprocessor-based remote monitoring and control of the one or more chemical injection systems **310** regardless of a communication protocol utilized by the chemical injection systems **310**, the base transceiver **325**, and/or the computer **305** (as well as other equipment present in system **300** but not illustrated in FIG. **3**).

Computer **305** may be a standalone computing device, such as a laptop computer, personal digital assistant (PDA), handheld electronic mail device, desktop computer, server, or other computing device. Although illustrated as a laptop computer, reference to the computer **305** includes any processor-based computing device that is operable to manipulate, display, receive, and/or transmit data, such as data associated with a wellsite, hydrocarbon piping system, or other hydrocarbon production facility. For example, computer **305** may include a combination of software, middleware, and hardware, including one or more memory devices (e.g., volatile or non-volatile memory including, without limitation, magnetic media, optical media, random access memory (RAM), read-only memory (ROM), removable media, or any other suitable local or remote memory component). Computer **305** may store in memory and execute one or more software applications written or described in any appropriate computer language including C, C++, Java, Visual Basic, assembler, Perl, any suitable version of 4GL, as well as others, in order to manipulate, display, receive, and/or transmit data.

In some embodiments, the computer **305** may be located at a remote monitoring station, such as the station **220**. Further computer **305** may be one of several computers at the remote monitoring station, where each computer **305** may monitor, receive data from, and/or generate commands transmitted to a single chemical injection system **310** or multiple chemical injection systems **310**.

Each chemical injection system **310** may be positioned at or near a wellsite and/or a pipeline transporting hydrocarbon fluid. In some embodiments, the chemical injection system **310** may be substantially similar to chemical injection system **210** and/or chemical injection system **100** described above. For example, each chemical injection system **310** may include a pump mechanically coupled to a motor, a motor controller, a processor-based controller, and a chemical reservoir. Chemical injection system **310** may be used in such embodiments to inject or otherwise introduce chemicals (e.g., corrosion inhibitors, ethanol, foamer) into a hydrocarbon conduit. The pump is fluidly coupled to hydrocarbon conduit and the reservoir and draws a specified amount of chemical stored in the reservoir and injects the chemical into the conduit at predefined time intervals, predetermined operating conditions, and/or when commanded. The pump is coupled to a motor, which is electrically coupled to the motor controller. The motor controller receives electrical power (such as, for example, from a solar power module at the chemical injection system **310**, as illustrated) and provides the power to the motor. In some embodiments, the motor controller may be a combination starter/disconnect, which provides "on-off" control of electrical power to the pump motor, while in such embodiments, the motor controller may be a variable frequency controller, operable to provide electrical power to the pump motor at a variety of frequencies (and thus rotational motor speeds) as system operating conditions warrant. In some embodiments, the controller may communicate to the motor controller in only one, or just a few, communication protocols (e.g., Modbus).

The controller is communicably coupled to the motor controller and, typically, provides microprocessor-based control of the motor controller and thus motor and pump of chemical injection system **310**. In some embodiments, the controller is communicably coupled (e.g., wirelessly, via wired communication, or a combination thereof) to one or more communication stations **320**. For example, in some embodiments, data may be transmitted between the communication station **320** and the chemical injection system **310** via a particular communication protocol (e.g., RS-232, RS-485 (Modbus or EIA-485), RS-422 (or EIA-422), TCP/IP, Fieldbus, DeviceNet, and Profibus, to name but a few) and over a certain communication form (e.g., cellular, RF, satellite, or other type of communication form). One or more additional communication stations **320** may be interposed between the communication station in direct communication with the chemical injection system **310** and a base transceiver **325**. For example, the communication stations **320** may be radio frequency (RF) transceivers that are operable to send and receive RF signals **335** representative of data and/or commands between the chemical injection systems **310** and the base transceiver **325**.

The base transceiver **325** receives and/or consolidates data received from the chemical injection systems **310** via the communication stations **320**. The base transceiver **325** may also receive and/or consolidate commands to the chemical injection systems **310** from the computer **305** (or other computing device). In the illustrated embodiment, the base transceiver **325** may communicate with the computer **305** over a communications network **330**. For example, the communications network **330** may be all or a portion of an enterprise or secured network; a VPN merely between computer **305** and other computing devices communicably coupled to the base transceiver **325**; one or more local area networks (LANs), radio access networks (RANs), metropolitan area networks (MANs), wide area networks (WANs), all or a portion of the global computer network known as the Internet; and/or any other communication system or systems at one or more locations.

The GUI **315**, in the illustrated embodiment, displays one or more variables or data for monitoring, managing, or otherwise controlling the chemical injection systems **310**.

For example, in the illustrated embodiment, the GUI **315** may display a level of a chemical reservoir at the chemical injection system **310**; power capacity and/or availability of a pump motor at the chemical injection system **310**; one or more pump or pump motor characteristics (e.g., amps, current status, pressure, as well as other parameters). The GUI **315** may also display other information in the illustrated format or in different formats.

In operation, a user or operator may utilize the GUI **315** to control one or more components of the chemical injection system **310** based on data received from the system **310** and displayed on the GUI **315**. For example, each chemical injection system **310** may include a number of wireless sensor devices operable to detect one or more operational parameters of the hydrocarbon stream within the pipeline. For instance, the system **310** may detect the relative amount of chemical additives injected into the pipeline. In some embodiments, the data is communicated to the computer **305** via the communication stations **320**, base transceiver **325**, and communications network **330**, where it is then processed. The computer **305** and/or a user operating the computer **305** may then issue commands to one or more of the chemical injection systems **310**. Such commands may include a command to stop injecting chemical additive into the pipeline and/or a command to inject a specified amount of chemical additive into the pipeline.

Turning to FIGS. **4**A-D, other example GUIs **400**, **410**, **420**, and **430** are illustrated. One or more of GUIs **400**, **410**, **420**, and **430** may be displayed on the computer **305** in place of or in addition to GUI **315**. Further, GUIs **400**, **410**, **420**, and **430** may show additional information associated with the chemical injection system **310**. For example, GUI **400** provides information related to temperature of fluid flowing through the pipeline and/or from chemical reservoir; flow rate of fluid flowing through the pipeline and/or from chemical reservoir; fluidic pressure of fluid flowing through the pipeline and/or from chemical reservoir; fluidic storage level of the chemical reservoir; a corrosion rate of the pipeline or other hydrocarbon transmission system; and a percentage water content of fluid flowing through the pipeline. GUI **410** provides information related to battery characteristics of the chemical injection system **310**, as well as characteristics of the pipeline and/or other hydrocarbon transmission system. GUI **420** provides information related to motor characteristics of a motor in the chemical injection system **310**. GUI **430** provides information related to additional operational characteristics of a pump and % or motor in the chemical injection system **310**, as well as example fault information of the chemical injection system **310**.

Returning to FIG. **3**, in certain embodiments, the computer **305** may control one or more chemical injection systems **310** without regard to data received from the systems **310** (or other monitoring systems). For instance, the computer **305** may issue commands to the chemical injection systems **310** to inject the chemical additives into the pipeline at set intervals. Alternatively, the computer **305** may merely monitor and/or store data wirelessly communicated directly to the chemical injection systems **310**. Upon receipt of such data, the chemical injection systems **310** may process the data and inject more or less chemical additive into the pipeline.

A number of embodiments have been described, and several others have been mentioned or suggested. Other embodiments are within the scope of the disclosure and claims. Some of the advantages of the chemical injection systems described herein have been discussed throughout this disclosure. Furthermore, those skilled in the art will readily recognize additional advantages that a variety of additions, deletions, alterations, and substitutions may be made to these embodiments.

What is claimed is:

1. A method, comprising:

monitoring a hydrocarbon stream in a hydrocarbon pipeline with a monitoring module in fluid communication with the hydrocarbon pipeline, the monitoring module comprising one or more sensor devices operable to detect one or more operational parameters of the hydrocarbon stream; and

injecting an amount of one or more chemical fluids adapted to treat the hydrocarbon stream via a pair of chemical injection systems remote and spaced apart from the monitoring module and in fluid communication with the hydrocarbon pipeline;

wherein the amount of the one or more chemical fluids accounts for a relative distance as measured between the monitoring module and each of the pair of chemical injection systems by data transmission between the pair of chemical injection systems and a control station that is remote from the pair of chemical injection systems, the data defining the one or more operational parameters from the monitoring module and commands to operate a pump motor at each one of the pair of chemical injection systems,

wherein data transmission from the monitoring module to the control station occurs as follows,

receiving, at a first communication station, data defining the one or more operational parameters from the pair of chemical injection systems in a first communication protocol;

using the first communication station, transmitting the data in the first communication protocol to a second communication station;

receiving the data in the first communication protocol at a base transceiver via the second communication station;

using a communication network to connect the base transceiver to a computer at the control station; and

wherein the computer, processes the data in the first communication protocol to generate data defining the commands in a second communication protocol that causes the pump motor to provide a uniformly consistent quantity of the one or more chemical fluids in the hydrocarbon pipeline,

wherein the first communication protocol is distinct from the second communication protocol.

2. The method of claim **1**, further comprising

modulating power supplied to the pump motors in response to the commands so as to operate the pumps to disperse the amount of the one or more chemical fluids.

3. The method of claim **1**, wherein the one or more operational parameters comprise at least one of the following:

a fluidic pressure in the hydrocarbon transmission system;

a fluidic flow rate in the hydrocarbon transmission system;

a percentage concentration by weight or volume of the chemical fluid in the hydrocarbon transmission system;

an operational parameter of the motor;

a controller temperature;

a battery voltage;

a motor current;

a solar cell charge current; and

one or more fault conditions.

4. The method of claim **1**, further comprising:

wirelessly transmitting a signal representative of the one or more operational parameters from the one or more sensor devices to the pair of chemical injection systems.

5. The method of claim **1**, wherein the one or more chemical fluids comprise at least one of:

a corrosion inhibitor;

a paraffin inhibitor;

a demulsifier;

an ethanol; and

a foamer.

6. The method of claim **1**, wherein the hydrocarbon pipeline is configured to connect in fluid communication with one or more hydrocarbon production sites.

7. The method of claim **1**, further comprising:

injecting more of the one or more chemical fluids with a first chemical injection system of the pair of chemical injection systems rather than with a second chemical injection system of the pair of chemical injection systems in response to a first distance between the first chemical injection system and the monitoring module that is larger than a second distance between the second chemical injection system and the monitoring module.

8. The method of claim **1**, wherein data transmission from the computer to the pump motors occurs as follows,

receiving the data in the second communication protocol at the second communication station via the base transceiver;

using the second communication station, transmitting the data in the second communication protocol to the first communication station; and

transmitting, from the first communication station, data defining the commands from the computer to the pump motor at each of the chemical injection stations.

* * * * *