FISH & RICHARDSON P.C.

1717 MAIN STREET
SUITE 5000
DALLAS, TEXAS
75201

Telephone
214 747-5070

Facsimile
214 747-2091

Web Site
www.fr.com

Matthew K. Wernli
512 226-8131

Email
wernli@fr.com

Frederick P. Fish
1855-1930

W.K. Richardson
1859-1951

ATLANTA
BOSTON
DALLAS
DELAWARE
HOUSTON
MUNICH
NEW YORK
SILICON VALLEY
SOUTHERN CALIFORNIA
TWIN CITIES
WASHINGTON, DC

June 7, 2010

Attorney Docket No.: 15825-0243001 / TEXSTEAM 09-001

Commissioner for Patents
P.O. Box 1450
Alexandria, VA 22313-1450

Presented for filing is a new patent application claiming priority from a provisional patent application of:

Applicant: FRANCISCO M. GUTIERREZ et al.

Title: CHEMICAL INJECTION SYSTEM

Enclosed are the following papers, including those required to receive a filing date under 37 C.F.R. §1.53(b):

	Pages
Specification	21
Claims	8
Abstract	1
Declaration	2
Drawing(s)	7

Enclosures:

Application Data Sheet, 4 pages
Information Disclosure Statement transmittal and Form PTO 1449, 2 pages.

Under 35 U.S.C. §119(e)(1), this application claims the benefit of prior U.S. provisional application 61/184,890, filed June 8, 2009.

Please apply the filing fee and any other required fees or any credits to deposit account 06-1050, referencing the attorney docket number shown above.

If this application is found to be incomplete, or if a telephone conference would otherwise be helpful, please call the undersigned at (512) 226-8131.

Please direct all correspondence to the following:

26231
PTO Customer Number

SitePro, Ex. 2006
TankLogix v. SitePro, IPR2025-00651

Respectfully submitted,

/Matthew K. Wernli/

Matthew K. Wernli
Reg. No. 63,173

Enclosures

MKW/kjv

90439934.doc

SitePro, Ex. 2006
TankLogix v. SitePro, IPR2025-00651

Under the Paperwork Reduction Act of 1995, no persons are required to respond to a collection of information unless it contains a valid OMB control number.

Application Data Sheet 37 CFR 1.76	Attorney Docket Number	15825-0243001
	Application Number	
Title of Invention	Chemical Injection System	

The application data sheet is part of the provisional or nonprovisional application for which it is being submitted. The following form contains the bibliographic data arranged in a format specified by the United States Patent and Trademark Office as outlined in 37 CFR 1.76.
This document may be completed electronically and submitted to the Office in electronic format using the Electronic Filing System (EFS) or the document may be printed and included in a paper filed application.

Secrecy Order 37 CFR 5.2

☐ Portions or all of the application associated with this Application Data Sheet may fall under a Secrecy Order pursuant to 37 CFR 5.2 (Paper filers only. Applications that fall under Secrecy Order may not be filed electronically.)

Applicant Information:

Applicant 1

Applicant Authority ◉ Inventor ◯ Legal Representative under 35 U.S.C. 117 ◯ Party of Interest under 35 U.S.C. 118

Prefix	Given Name	Middle Name	Family Name	Suffix
	Francisco	M.	Gutierrez	

Residence Information (Select One) ◉ US Residency ◯ Non US Residency ◯ Active US Military Service

City	League City	State/Province	TX	Country of Residence	US

Citizenship under 37 CFR 1.41(b) US

Mailing Address of Applicant:

Address 1	304 Cedar Branch Drive		
Address 2			
City	League City	State/Province	TX
Postal Code	77573	Country	US

Applicant 2

Applicant Authority ◉ Inventor ◯ Legal Representative under 35 U.S.C. 117 ◯ Party of Interest under 35 U.S.C. 118

Prefix	Given Name	Middle Name	Family Name	Suffix
	Richard	D.	Atton	

Residence Information (Select One) ◉ US Residency ◯ Non US Residency ◯ Active US Military Service

City	Houston	State/Province	TX	Country of Residence	US

Citizenship under 37 CFR 1.41(b) US

Mailing Address of Applicant:

Address 1	12143 Oakcroft Dr.		
Address 2			
City	Houston	State/Province	TX
Postal Code	77070	Country	US

All Inventors Must Be Listed - Additional Inventor Information blocks may be generated within this form by selecting the **Add** button. Add

Correspondence Information:

Enter either Customer Number or complete the Correspondence Information section below.
For further information see 37 CFR 1.33(a).

☐ **An Address is being provided for the correspondence Information of this application.**

SitePro, Ex. 2006
TankLogix v. SitePro, IPR2025-00651

Under the Paperwork Reduction Act of 1995, no persons are required to respond to a collection of information unless it contains a valid OMB control number.

Application Data Sheet 37 CFR 1.76	Attorney Docket Number	15825-0243001
	Application Number	
Title of Invention	Chemical Injection System	

Customer Number	26231		
Email Address		Add Email	Remove Email

Application Information:

Title of the Invention	Chemical Injection System		
Attorney Docket Number	15825-0243001	**Small Entity Status Claimed**	☐
Application Type	Nonprovisional		
Subject Matter	Utility		
Suggested Class (if any)		**Sub Class (if any)**	
Suggested Technology Center (if any)			
Total Number of Drawing Sheets (if any)	7	**Suggested Figure for Publication (if any)**	3

Publication Information:

☐ Request Early Publication (Fee required at time of Request 37 CFR 1.219)

☐ **Request Not to Publish.** I hereby request that the attached application not be published under 35 U.S. C. 122(b) and certify that the invention disclosed in the attached application **has not and will not** be the subject of an application filed in another country, or under a multilateral international agreement, that requires publication at eighteen months after filing.

Representative Information:

Representative information should be provided for all practitioners having a power of attorney in the application. Providing this information in the Application Data Sheet does not constitute a power of attorney in the application (see 37 CFR 1.32).
Enter either Customer Number or complete the Representative Name section below. If both sections are completed the Customer Number will be used for the Representative Information during processing.

Please Select One:	◉ Customer Number	○ US Patent Practitioner	○ Limited Recognition (37 CFR 11.9)
Customer Number	26231		

Domestic Benefit/National Stage Information:

This section allows for the applicant to either claim benefit under 35 U.S.C. 119(e), 120, 121, or 365(c) or indicate National Stage entry from a PCT application. Providing this information in the application data sheet constitutes the specific reference required by 35 U.S.C. 119(e) or 120, and 37 CFR 1.78(a)(2) or CFR 1.78(a)(4), and need not otherwise be made part of the specification.

Prior Application Status			Remove
Application Number	Continuity Type	Prior Application Number	Filing Date (YYYY-MM-DD)
	non provisional of	61184890	2009-06-08

Additional Domestic Benefit/National Stage Data may be generated within this form by selecting the **Add** button.

Foreign Priority Information:

SitePro, Ex. 2006
TankLogix v. SitePro, IPR2025-00651

Under the Paperwork Reduction Act of 1995, no persons are required to respond to a collection of information unless it contains a valid OMB control number.

Application Data Sheet 37 CFR 1.76	Attorney Docket Number	15825-0243001
	Application Number	
Title of Invention	Chemical Injection System	

This section allows for the applicant to claim benefit of foreign priority and to identify any prior foreign application for which priority is not claimed. Providing this information in the application data sheet constitutes the claim for priority as required by 35 U.S.C. 119(b) and 37 CFR 1.55(a).

Remove

Application Number	Country	Parent Filing Date (YYYY-MM-DD)	Priority Claimed
			◯ Yes ◯ No

Additional Foreign Priority Data may be generated within this form by selecting the **Add** button.

Assignee Information:

Providing this information in the application data sheet does not substitute for compliance with any requirement of part 3 of Title 37 of the CFR to have an assignment recorded in the Office.

Assignee 1

If the Assignee is an Organization check here. ☒

Organization Name	Dresser, Inc.		
Mailing Address Information:			
Address 1	15455 Dallas Parkway		
Address 2	11th Floor, Millennium I		
City	Addision	**State/Province**	TX
Country	US	Postal Code	75001
Phone Number		Fax Number	
Email Address			

Additional Assignee Data may be generated within this form by selecting the **Add** button.

Signature:

A signature of the applicant or representative is required in accordance with 37 CFR 1.33 and 10.18. Please see 37 CFR 1.4(d) for the form of the signature.

Signature	/Matthew K. Wernli/			Date (YYYY-MM-DD)	2010-06-07
First Name	Matthew	Last Name	Wernli	Registration Number	63173

This collection of information is required by 37 CFR 1.76. The information is required to obtain or retain a benefit by the public which is to file (and by the USPTO to process) an application. Confidentiality is governed by 35 U.S.C. 122 and 37 CFR 1.14. This collection is estimated to take 23 minutes to complete, including gathering, preparing, and submitting the completed application data sheet form to the USPTO. Time will vary depending upon the individual case. Any comments on the amount of time you require to complete this form and/or suggestions for reducing this burden, should be sent to the Chief Information Officer, U.S. Patent and Trademark Office, U.S. Department of Commerce, P.O. Box 1450, Alexandria, VA 22313-1450. DO NOT SEND FEES OR COMPLETED FORMS TO THIS ADDRESS. **SEND TO: Commissioner for Patents, P.O. Box 1450, Alexandria, VA 22313-1450.**

SitePro, Ex. 2006
TankLogix v. SitePro, IPR2025-00651

Privacy Act Statement

The Privacy Act of 1974 (P.L. 93-579) requires that you be given certain information in connection with your submission of the attached form related to a patent application or patent. Accordingly, pursuant to the requirements of the Act, please be advised that: (1) the general authority for the collection of this information is 35 U.S.C. 2(b)(2); (2) furnishing of the information solicited is voluntary; and (3) the principal purpose for which the information is used by the U.S. Patent and Trademark Office is to process and/or examine your submission related to a patent application or patent. If you do not furnish the requested information, the U.S. Patent and Trademark Office may not be able to process and/or examine your submission, which may result in termination of proceedings or abandonment of the application or expiration of the patent.

The information provided by you in this form will be subject to the following routine uses:

1. The information on this form will be treated confidentially to the extent allowed under the Freedom of Information Act (5 U.S.C. 552) and the Privacy Act (5 U.S.C. 552a). Records from this system of records may be disclosed to the Department of Justice to determine whether the Freedom of Information Act requires disclosure of these records.

2. A record from this system of records may be disclosed, as a routine use, in the course of presenting evidence to a court, magistrate, or administrative tribunal, including disclosures to opposing counsel in the course of settlement negotiations.

3. A record in this system of records may be disclosed, as a routine use, to a Member of Congress submitting a request involving an individual, to whom the record pertains, when the individual has requested assistance from the Member with respect to the subject matter of the record.

4. A record in this system of records may be disclosed, as a routine use, to a contractor of the Agency having need for the information in order to perform a contract. Recipients of information shall be required to comply with the requirements of the Privacy Act of 1974, as amended, pursuant to 5 U.S.C. 552a(m).

5. A record related to an International Application filed under the Patent Cooperation Treaty in this system of records may be disclosed, as a routine use, to the International Bureau of the World Intellectual Property Organization, pursuant to the Patent Cooperation Treaty.

6. A record in this system of records may be disclosed, as a routine use, to another federal agency for purposes of National Security review (35 U.S.C. 181) and for review pursuant to the Atomic Energy Act (42 U.S.C. 218(c)).

7. A record from this system of records may be disclosed, as a routine use, to the Administrator, General Services, or his/her designee, during an inspection of records conducted by GSA as part of that agency's responsibility to recommend improvements in records management practices and programs, under authority of 44 U.S.C. 2904 and 2906. Such disclosure shall be made in accordance with the GSA regulations governing inspection of records for this purpose, and any other relevant (i.e., GSA or Commerce) directive. Such disclosure shall not be used to make determinations about individuals.

8. A record from this system of records may be disclosed, as a routine use, to the public after either publication of the application pursuant to 35 U.S.C. 122(b) or issuance of a patent pursuant to 35 U.S.C. 151. Further, a record may be disclosed, subject to the limitations of 37 CFR 1.14, as a routine use, to the public if the record was filed in an application which became abandoned or in which the proceedings were terminated and which application is referenced by either a published application, an application open to public inspections or an issued patent.

9. A record from this system of records may be disclosed, as a routine use, to a Federal, State, or local law enforcement agency, if the USPTO becomes aware of a violation or potential violation of law or regulation.

SitePro, Ex. 2006

TankLogix v. SitePro, IPR2025-00651

IN THE UNITED STATES PATENT AND TRADEMARK OFFICE

Applicant	: Gutierrez et al.	Art Unit	: Unknown
Serial No.	: TBD	Examiner	: Unknown
Filed	: Herewith		
Title	: CHEMICAL INJECTION SYSTEM		

Commissioner for Patents
P.O. Box 1450
Alexandria, VA 22313-1450

INFORMATION DISCLOSURE STATEMENT

Please consider the references listed on the enclosed PTO-1449 form. Cited U.S. patents and patent application publications can be provided on request.

This statement is being filed with the application. No fees are believed due. If this is incorrect, however, the Commissioner is authorized to apply any charges or credits to Deposit Account No. 06-1050, referencing the attorney docket number listed above.

Respectfully submitted,

Date: June 7, 2010

/Matthew K. Wernli/
Matthew K. Wernli
Reg. No. 63,173

Customer Number 26231
Fish & Richardson P.C.
PO Box 1022
Minneapolis, MN 55440-1022
Telephone: (512) 226-8131
Facsimile: (877) 769-7945

11093128.doc

CERTIFICATE OF MAILING BY EFS-WEB FILING

I hereby certify that this paper was filed with the Patent and Trademark Office using the EFS-WEB system on this date: June 07, 2010

SitePro, Ex. 2006
TankLogix v. SitePro, IPR2025-00651

COMBINED DECLARATION AND POWER OF ATTORNEY

As a below named inventor, I hereby declare that:

My residence, post office address and citizenship are as stated below next to my name.

I believe I am the original, first and sole inventor (if only one name is listed below) or an original, first and joint inventor (if plural names are listed below) of the subject matter which is claimed and for which a patent is sought on the invention entitled CHEMICAL INJECTION SYSTEM, the specification of which:

[X] is attached hereto.
[] was filed on _____ as Application Serial No. _____and was amended on _____.
[] was described and claimed in PCT International Application No. _____ filed on _____ and as amended under PCT Article 19 on _____.

I hereby state that I have reviewed and understand the contents of the above-identified specification, including the claims, as amended by any amendment referred to above.

I acknowledge the duty to disclose to the United States Patent and Trademark Office all information known to me to be material to patentability as defined in 37 CFR 1.56, including for continuation-in-part applications, material information which became available between the filing date of the prior application and the national or PCT International filing date of the continuation-in-part application.

I hereby claim the benefit under Title 35, United States Code, §119(e)(1) of any United States provisional application(s) listed below:

U.S. Serial No.	Filing Date	Status
61/184,890	June 8, 2009	Pending

I hereby claim the benefit under Title 35, United States Code, §120 of any United States application(s) listed below and, insofar as the subject matter of each of the claims of this application is not disclosed in the prior United States application in the manner provided by the first paragraph of Title 35, United States Code, §112, I acknowledge the duty to disclose all information I know to be material to patentability as defined in Title 37, Code of Federal Regulations, §1.56(a) which became available between the filing date of the prior application and the national or PCT international filing date of this application:

U.S. Serial No.	Filing Date	Status

I hereby claim foreign priority benefits under Title 35, United States Code, §119 of any foreign application(s) for patent or inventor's certificate or of any PCT international application(s) designating at least one country other than the United States of America listed below and have also identified below any foreign application for patent or inventor's certificate or any PCT international application(s) designating at least one country other than the United States of America filed by me on the same subject matter having a filing date before that of the application(s) of which priority is claimed:

Country	Application No.	Filing Date	Priority Claimed
			[] Yes [X] No
			[] Yes [X] No

SitePro, Ex. 2006
TankLogix v. SitePro, IPR2025-00651

Combined Declaration and Power of Attorney

I hereby appoint the following attorneys and/or agents to prosecute this application and to transact all business in the Patent and Trademark Office connected therewith the PTO Customer Number listed below:

26231
PTO Customer Number

Direct all telephone calls to MATTHEW K. WERNLI at telephone number 512-226-8131.

Direct all correspondence to the following:

26231
PTO Customer Number

I hereby declare that all statements made herein of my own knowledge are true and that all statements made on information and belief are believed to be true; and further that these statements were made with the knowledge that willful false statements and the like so made are punishable by fine or imprisonment, or both, under Section 1001 of Title 18 of the United States Code and that such willful false statements may jeopardize the validity of the application or any patents issued thereon.

Full Name of Inventor: FRANCISCO M. GUTIERREZ
Inventor's Signature: _____ Date: 6/7/2010
Residence Address: League City, Texas
Citizenship: United States of America
Post Office Address: 304 Cedar Branch Drive
League City, Texas 77573

Full Name of Inventor: RICHARD D. ATTON
Inventor's Signature: Richard D Atton Date: 6/7/2010
Residence Address: Houston, Texas
Citizenship: United States of America
Post Office Address: 12143 Oakcroft
Houston, Texas 77070

11093230.doc

SitePro, Ex. 2006
TankLogix v. SitePro, IPR2025-00651

CHEMICAL INJECTION SYSTEM

CLAIM OF PRIORITY

[0001] This application claims priority under 35 U.S.C. § 119(e) to U.S. Provisional Patent Application Serial No. 61/184,890, filed on June 8, 2009, the entire contents of which are hereby incorporated by reference.

TECHNICAL BACKGROUND

[0002] This disclosure relates to a chemical injection system and, more particularly, to a chemical injection system controlled through remote communications via one or more communication protocols.

BACKGROUND

[0003] Conduit systems that carry and/or transport one or more fluids may utilize injection systems to insert other fluids (*e.g.*, additives, inhibitors, or otherwise) into the conduit system. For example, hydrocarbon systems that transport hydrocarbon fluids, such as oil and/or gas or other fluids, often receive injected fluids in order to, for example, control corrosion within the conduit or pipeline; prevent paraffin deposition; and break emulsions in the transported hydrocarbon fluids. The injected fluids may also be used for water removal or separation from hydrocarbon gasses or liquids. In some instances, a chemical injector may be associated with a wellsite or other hydrocarbon production facility in order to inject chemical additives into a pipeline fluidly coupled at the wellsite with a wellbore producing hydrocarbons. The chemical injector may periodically inject a set amount of chemical additives into the pipeline at predetermined intervals in order to maintain a desired amount of such additives within the pipeline. In such instances, however, the chemical injector may simply inject the additives on a timer system without regard to certain variables such as, for example, the flow rate through the pipeline the amount (percentage concentration) of additives already within the transported hydrocarbon fluids in the pipeline, possible problems within the pipeline or production facility, and/or a desired or required increase in the set amount of additives injected into the pipeline. Further, the chemical injector may have no ability to communicate with other equipment and/or

SitePro, Ex. 2006
TankLogix v. SitePro, IPR2025-00651

monitoring systems in order to take account of such variables. If communication is possible, however, equipment and/or monitoring systems communicably coupled with the chemical injector may not transmit data and/or instructions in a protocol readily understood by the chemical injector, or vice versa.

SitePro, Ex. 2006
TankLogix v. SitePro, IPR2025-00651

SUMMARY

[0004] In one general embodiment, a method for controlling a chemical injection system for a hydrocarbon transmission system includes providing a chemical injection system. The chemical injection system includes a pump driven by a motor and in fluid communication with a chemical reservoir and the hydrocarbon transmission system, where the pump is adapted to inject one or more chemical fluids into the hydrocarbon transmission system. The chemical injection system includes a motor controller coupled to the motor and adapted to control operation of the motor; and a controller communicably coupled to the motor controller. The method includes receiving an operational command at the chemical injection system in a first communication protocol from a remote computer; translating, at the controller, the operational command at the first communication protocol to an operational command at a second communication protocol different than the first communication protocol; transmitting the operational command at the second communication protocol from the controller to the motor controller; and adjusting the motor controller to control the operation of the motor in response to receiving the operational command at the second communication protocol from the controller.

[0005] In another general embodiment, a chemical injection system for a hydrocarbon pipeline includes: a pump in fluid communication with a chemical reservoir and the pipeline; a motor coupled to the pump and adapted to drive the pump to transfer a chemical fluid from the reservoir to the pipeline; a motor controller electrically coupled to a power module and the motor and adapted to adjust a rotational speed of the motor; and a central controller communicably coupled to the motor controller and a remote computing device. The controller includes a translator adapted to receive a signal from the remote computing device in a first communication protocol and translate the signal from the remote computing device to a command in a second communication protocol distinct from the first communication protocol, where the command is operable to adjust the motor controller to adjust the rotational speed of the motor.

[0006] In another general embodiment, a system includes: a remote computing system comprising a graphical user interface (GUI); a sensor coupled with a hydrocarbon transmission system; and a chemical injection system. The chemical injection system includes: a pump in fluid communication with a chemical reservoir and the hydrocarbon transmission system; a motor coupled to the pump and adapted to drive the pump to transfer a chemical fluid from the reservoir to the hydrocarbon transmission system; a power module adapted to receive solar

power and convert the solar power to electrical power; a motor controller electrically coupled to the power module and the motor and adapted to adjust a rotational speed of the motor; and a central controller communicably coupled to the motor controller and communicably coupled to the remote computing system and the sensor. The controller includes a translator adapted to receive a signal from the remote computing system in a first communication protocol and translate the signal from the remote computing system to a command in a second communication protocol distinct from the first communication protocol, where the command operable to adjust the motor controller to adjust the rotational speed of the motor.

[0007] In one aspect of one or more general embodiments, a method may further include receiving a second operational command at the chemical injection system in a third communication protocol from the remote computer; translating, at the controller, the second operational command at the third communication protocol to second operational command at the second communication protocol different than the third communication protocol; transmitting the second operational command at the second communication protocol from the controller to the motor controller; and adjusting the motor controller to control the operation of the motor in response to receiving the second operational command at the second communication protocol from the controller.

[0008] In one aspect of one or more general embodiments, a method may further include monitoring at least one parameter of the hydrocarbon transmission system by the chemical injection system; transmitting the parameter to the remote computer; and receiving a fourth operational command at one of the first or third communication protocols from the remote computer in response to the parameter.

[0009] In one aspect of one or more general embodiments, the parameter may include one of the following: a fluidic pressure in the hydrocarbon transmission system; a fluidic flowrate in the hydrocarbon transmission system; a percentage concentration by weight or volume of chemical fluid in the hydrocarbon transmission system; an operational parameter of the motor; a controller temperature; a battery voltage; a motor current; a solar cell charge current; and one or more fault conditions.

[0010] In one aspect of one or more general embodiments, a method may further include measuring the parameter with a sensor positioned in the hydrocarbon transmission system; and

SitePro, Ex. 2006
TankLogix v. SitePro, IPR2025-00651

wirelessly transmitting a signal representative of the parameter from the sensor to the chemical injection system.

[0011] In one aspect of one or more general embodiments, chemical additives may include at least one of: a corrosion inhibitor; a paraffin inhibiter; a demulsifier; an ethanol; and a foamer.

[0012] In one aspect of one or more general embodiments, receiving an operational command at the chemical injection system in a first communication protocol from a remote computer may include receiving an operational command at the chemical injection system in a first communication protocol from a remote computer via a radio frequency RF signal.

[0013] In one aspect of one or more general embodiments, a method may further include receiving a signal representative of a sensed parameter of the hydrocarbon transmission system in the second communication protocol; translating the parameter in the second communication protocol to a signal representative of the sensed parameter in the first communication protocol; and transmitting the signal representative of the sensed parameter in the first communication protocol to the remote computer.

[0014] In one aspect of one or more general embodiments, adjusting the motor controller to control the operation of the motor in response to receiving the operational command at the second communication protocol from the controller may include adjusting a rotational speed of the motor.

[0015] In one aspect of one or more general embodiments, a method may further include providing a sensor coupled to the hydrocarbon transmission system and adapted to monitor an operational parameter of the system; receiving a signal representative of the operational parameter at the controller from the sensor; and automatically adjusting the motor controller to adjust a rotational speed of the motor in response to receiving the signal representative of the operational parameter.

[0016] In one aspect of one or more general embodiments, a method may further include providing a second chemical injection system; receiving a third operational command at the second chemical injection system in the first communication protocol from the remote computer; translating, at the second controller, the third operational command at the first communication protocol to a third operational command at the second communication; transmitting the third operational command at the second communication protocol from the second controller to the

SitePro, Ex. 2006
TankLogix v. SitePro, IPR2025-00651

second motor controller; and adjusting the second motor controller to control the operation of the second motor in response to receiving the third operational command at the second communication protocol from the second controller. The second chemical injection system may include: a second pump driven by a second motor and in fluid communication with the chemical reservoir and the hydrocarbon transmission system, where the second pump is adapted to inject one or more chemical fluids into the hydrocarbon transmission system; a second motor controller coupled to the second motor and adapted to control operation of the second motor; and a second controller communicably coupled to the second motor controller.

[0017] In one aspect of one or more general embodiments, the motor controller may include a variable frequency drive.

[0018] In one aspect of one or more general embodiments, the translator may be further adapted to receive a signal from the remote computing device in a third communication protocol and translate the signal from the remote computing device to a second command in the second communication protocol distinct from the third and the first communication protocols, where the second command is operable to adjust the motor controller to adjust the rotational speed of the motor.

[0019] In one aspect of one or more general embodiments, a system may further include a receiver communicably coupled to the central controller and adapted to receive the signal from the remote computing device, the signal comprising a radio frequency (RF) signal.

[0020] In one aspect of one or more general embodiments, the receiver maybe adapted to receive a second signal from a remote sensor coupled to the pipeline.

[0021] In one aspect of one or more general embodiments, the controller may be further adapted to receive the second signal from the remote sensor through the receiver and transmit the second signal to the remote computing device.

[0022] In one aspect of one or more general embodiments, the translator may be adapted to receive the second signal from the receiver, the second signal in the second communication protocol, and translate the second signal to a third signal in the first communication protocol.

[0023] In one aspect of one or more general embodiments, the second communication protocol may include a Modbus protocol.

[0024] In one aspect of one or more general embodiments, the GUI may be adapted to display one or more operational parameters of the chemical injection system.

SitePro, Ex. 2006
TankLogix v. SitePro, IPR2025-00651

[0025] In one aspect of one or more general embodiments, a system may further include a transceiver communicably coupled to the remote computing station through a communications network, the transceiver in RF communication with the chemical injection system.

[0026] In one aspect of one or more general embodiments, a system may further include one or more communication stations in RF communication with the chemical injection system and the transceiver, where each communication station is adapted to relay operational parameters of the chemical injection system in the form of RF signals between the transceiver and the chemical injection system.

[0027] In one aspect of one or more general embodiments, a system may further include: a second sensor coupled with the hydrocarbon transmission system; and a second chemical injection system. The second chemical injection system may include a pump in fluid communication with the chemical reservoir and the hydrocarbon transmission system; a motor coupled to the pump and adapted to drive the pump to transfer the chemical fluid from the reservoir to the hydrocarbon transmission system; a power module; a motor controller electrically coupled to the power module and the second motor and adapted to adjust a rotational speed of the motor; and a central controller communicably coupled to the motor controller and to the remote computing system and the second sensor. The controller may include a translator adapted to receive a signal from the remote computing system in the first communication protocol and translate the signal from the remote computing system to a command in the second communication protocol distinct from the first communication protocol, where the command is operable to adjust the motor controller to adjust the rotational speed of the motor.

[0028] One or more of the above-described embodiments, as well as other embodiments described herein, may include one or more of the following features. For example, a chemical injection system may be remotely controlled through wired or wireless communication. A chemical injection system may be able to receive data in the form of a particular communication protocol and translate such data into a separate and distinct protocol. A chemical injection system may be able to reduce waste of chemicals injected into a hydrocarbon pipeline upon loss of pipeline pressure due to breaks or leaks. A chemical injection system may include a stand-alone power generation module obviating the need for electrical power from a municipal, city, or state power grid. A hydrocarbon transmission system including one or more chemical injection systems may more efficiently inject chemical additives into the system by monitoring the amount

SitePro, Ex. 2006
TankLogix v. SitePro, IPR2025-00651

of additives present in the system, thereby preventing waste. Further, a hydrocarbon transmission system including one or more chemical injection systems may account for relative distances between production sites and pipeline monitoring locations in order to efficiently inject chemical additives into the system without waste. Additionally, a hydrocarbon transmission system including one or more chemical injection systems may monitor the amounts of injected chemical remaining in one or more chemical fluid reservoirs in order to avoid such injection units running out of chemicals.

[0029] These general and specific aspects may be implemented using a device, system or method, or any combinations of devices, systems, or methods. The details of one or more embodiments are set forth in the accompanying drawings and the description below. Other features, objects, and advantages will be apparent from the description and drawings, and from the claims.

SitePro, Ex. 2006
TankLogix v. SitePro, IPR2025-00651

DESCRIPTION OF DRAWINGS

[0030] FIG. 1 illustrates a block diagram of one embodiment of a chemical injection system in accordance with the present disclosure;

[0031] FIG. 2 illustrates a block diagram of a hydrocarbon production system utilizing one or more chemical injection systems in accordance with the present disclosure;

[0032] FIG. 3 illustrates a schematic drawing of an example system for managing one or more chemical injection systems in accordance with the present disclosure; and

[0033] FIGS. 4A-D illustrate example graphical user interfaces (GUI) for use in a system for managing one or more chemical injection systems in accordance with the present disclosure.

SitePro, Ex. 2006
TankLogix v. SitePro, IPR2025-00651

DETAILED DESCRIPTION

[0034] In one embodiment, a chemical injection system for a hydrocarbon transmission system includes a pumping system adapted to inject a specified amount of chemical additive into the transmission system; and a controller communicably coupled to the pumping system and adapted to receive one or more operational parameters of the transmission system and transmit a command to the pumping system based on the one or more operational parameters, where the pumping system injects the specified amount in response to the command.

[0035] In another embodiment, a chemical injection system for a hydrocarbon transmission system includes a pumping system adapted to inject a specified amount of chemical additive into the transmission system; and a controller communicably coupled to the pumping system and adapted to receive one or more operational parameters of the transmission system in a first communication protocol and transmit a command to the pumping system based on the one or more operational parameters, where the pumping system injects the specified amount in response to the command. The command is in a second communication protocol distinct from the first protocol.

[0036] In another embodiment, a chemical injection system for a hydrocarbon transmission system includes a pumping system adapted to inject a specified amount of chemical additive into the transmission system; and a controller communicably coupled to the pumping system and a remote data source. The controller is adapted to receive one or more operational parameters of the transmission system from the remote data source and transmit a command to the pumping system based on the one or more operational parameters, where the pumping system injects the specified amount in response to the command.

[0037] In another embodiment, a hydrocarbon transmission system includes a pipeline adapted to enclose a fluid transmitted from a plurality of hydrocarbon production sites to a processing site and a plurality of chemical injection systems. Each injection system includes a pumping system adapted to inject a specified amount of chemical additive into the pipeline; and a controller communicably coupled to the pumping system and adapted to receive one or more operational parameters of the pipeline and transmit a command to the pumping system based on the one or more operational parameters, where the pumping system injects the specified amount in response to the command. The hydrocarbon transmission system further includes a data capture apparatus remote from the plurality of chemical injection systems and coupled to the

SitePro, Ex. 2006
TankLogix v. SitePro, IPR2025-00651

pipeline, the data capture apparatus adapted to detect the one or more operational parameters and transmit the parameters to at least one of the plurality of chemical injection systems, where the one or more operational parameters include a distance between the data capture apparatus and the plurality of chemical injection systems.

[0038] FIG. 1 illustrates a block diagram of one embodiment of a chemical injection system 100 in accordance with the present disclosure. Chemical injection system 100, typically, includes a pump 105 mechanically coupled to a driver, such as a motor 110; a motor controller 115; a controller 130, and a chemical reservoir 165. In some embodiments, the controller 130 may be a single unit integrating a motor-controller, controller, and a data acquisition module. Alternatively, at least one of the data acquisition module (not shown) and motor-controller may be separate from the controller 130. In one preferred embodiment, the chemical injection system 100 may be utilized in a hydrocarbon production system, such as, for example, a field or area having one or more hydrocarbon (*e.g.*, oil, natural gas) production sites. Chemical injection system 100 may be used in such embodiments to inject or otherwise introduce chemicals (*e.g.*, corrosion inhibitors, ethanol, foamer, paraffin inhibiter, demulsifier, or other chemical) into a hydrocarbon conduit, such as a pipeline 120 or wellbore. In some embodiments, for example, an appropriate amount of chemicals, such as a predetermined volumetric amount, an amount per unit volume of fluid flowing through a pipeline, or an amount sufficient to keep a measured pipeline parameter within in a particular range, may be injected into the pipeline 120 or other hydrocarbon transmission apparatus.

[0039] Pump 105 is fluidly coupled to the pipeline 120 and the reservoir 165 and, generally, draws a specified amount of chemical stored in the reservoir 165 and injects the chemical into the pipeline 120 at predefined time intervals, predetermined operating conditions, and/or when commanded. Pump 105 may be any appropriate fluid displacement device, such as, for example, a centrifugal pump, diaphragm pump, or other rotary fluid displacement apparatus, or a positive displacement (*e.g.*, piston or plunger) pump, such as a reciprocating pump. In any event, reference to the pump 105 includes all fluid displacement apparatus operable to receive a fluid at an inlet and impart mechanical energy to the fluid for transporting the fluid through an outlet. In the illustrated embodiment, pump 105 receives chemicals from the reservoir 165 and introduces the chemical into the pipeline 120; alternatively, chemicals may be received at the pump 105 through a separate pipeline or conduit, as appropriate.

SitePro, Ex. 2006
TankLogix v. SitePro, IPR2025-00651

[0040] In some embodiments, pump 105 may be constructed with particular materials in order to prevent corrosion or deterioration due to the flow of chemical fluid through the pump 105. For instance, one or more components of pump 105 may be constructed of stainless steel (*e.g.*, 316), titanium, or any other non-corrosive material, as appropriate.

[0041] Motor 110 is mechanically coupled to the pump 105 and provides power to the pump 105 for fluid displacement. In some embodiments, the motor 110 includes a weatherproof enclosure or design, and is adapted to function in environmentally extreme (*e.g.*, snow, rain, heat) and hazardous conditions. For example, motor 110 may be a totally-enclosed fan cooled (TEFC), totally-enclosed air over (TEAO), hazardous duty, and/or explosion proof motor. In any event, motor 110 may include the appropriate NEMA (National Electrical Manufacturers Association) rating for operating requirements in an outdoor, hydrocarbon production area.

[0042] Motor controller 115 is electrically coupled to the motor 110 and, typically, controls the supply of phased power (*e.g.*, 120/3/60, 460/3/60, 208/3/60, 240/1/60, 50 Hertz, DC: 12/24/48/96/single or three phase/brushed or brushless) to the motor 110. Motor controller 115 receives electrical power, in some embodiments, from an area power supply, such as a municipal or state power grid, through the power supply 125. Alternatively, or in addition, the motor controller 115 may receive electrical power through the power supply from a power module 135, which may be enclosed in, integral with, or separate from the controller 130. For instance, in some embodiments, the power module 135 may be a solar power module, operable to convert solar energy to electrical power. Other forms of power generation (*e.g.*, wind, natural gas, hydroelectric, etc.) may also be used, as appropriate. Power module 135 may also be a battery, such as a lithium, zinc-carbon, gel cell, full cell, or alkaline cell battery, as appropriate. In one preferred embodiment, the power module 135 may be the primary source of electrical power to the motor controller 115 (and thus motor 110), with the power grid as a secondary power source should there be problems or a failure of the power module 135. Alternatively, in some embodiments, the power grid may be the primary source of electrical power to the motor controller 115 with the power module 135 serving as the secondary source of electrical power. Further, in some embodiments, the power module 135 could be a combined solar module and battery.

[0043] Motor controller 115 is electrically coupled to the motor 110 and, typically, provides and controls electrical power to the motor 110 for operation of the pump 105. In some

SitePro, Ex. 2006
TankLogix v. SitePro, IPR2025-00651

embodiments, motor controller 110 may be a combination starter/disconnect, which provides "on-off" control of electrical power to the motor 110. In such embodiments, the motor 110 may be operated as a constant (or single) speed motor. Alternatively, the motor controller 115 may also be a variable frequency controller, operable to provide electrical power to motor 110 at a variety of frequencies (and thus rotational motor speeds) as system operating conditions warrant. As with the motor 110, motor controller 115 may be enclosed or otherwise protected against environmental and/or hazardous operating conditions.

[0044] Controller 130 is communicably coupled to the motor controller 115 and, typically, provides microprocessor-based control of the motor controller 115 and thus motor 110 and pump 105. The controller 130 includes a communication module 140, a translation module 145, motor driver, data acquisition, data storage, and a processor 150. As illustrated in FIG. 1, these components may be enclosed or integrated with controller 130. Alternatively, one or more of the communication module 140, translation module 145, processor 150, and also the power module 135 may be in separate enclosures but communicably coupled in between. Generally, controller 130 receives inputs and/or instructions and commands from a remote source and, according to the commands, controls the operation and/or speed of the motor 110 and pump 105 to inject chemicals into the pipeline 120. Alternatively, the controller 130 may be a stand alone controller with preset programs and schedules to execute. For example, the controller 130 may receive data representative of pipeline conditions, such as line pressure, amount of chemicals present in the pipeline 120, and motor operating conditions, and in turn, control the pump 105 to inject more or less chemicals into the pipeline 120.

[0045] The controller 130, in some preferred embodiments, may include a combination of software, middleware, and hardware configured as the communication module 140, translation module 145, and processor 150. Controller 130 may further include one or more memory devices (not shown) located therein or communicably coupled to the controller 130. In some embodiments, for example, such memory may be any database module and may take the form of volatile or non-volatile memory including, without limitation, magnetic media, optical media, random access memory (RAM), read-only memory (ROM), removable media, or any other suitable local or remote memory component. The memory may also include any other appropriate data such as data classes or object interfaces, and software sub-applications or sub-systems.

SitePro, Ex. 2006
TankLogix v. SitePro, IPR2025-00651

[0046] In certain embodiments, for example, the controller 130 may store in memory and execute one or more software applications written or described in any appropriate computer language including C, C++, Java, Visual Basic, assembler, Perl, any suitable version of 4GL, as well as others. Such applications may be executed by the processor 150 located within or communicably coupled to the controller 130. Processor 150 executes instructions and manipulates data to perform the operations of the controller 130. The processor 150 may be, for example, a central processing unit (CPU), a blade, an application specific integrated circuit (ASIC), or a field-programmable gate array (FPGA). Although the present disclosure contemplates a single processor 150 in controller 130, multiple processors may be used according to particular needs, and reference to a single processor 150 is meant to include multiple processors where applicable.

[0047] In some embodiments, the controller 130 is communicably coupled to a communication bus 155 at the communication module 140. The communication bus 140, generally, is a wired communication connection operable to carry data between the communication module and a remote source, such as one or more electronic sensors monitoring the pipeline 120, the motor 110, the pump 105, or other component or apparatus. In any event, communication bus 155 is a non-limiting example of wired communications between the system 100 and a remote data source.

[0048] Alternatively or in addition to the communication bus 155, system 100 may include a wireless antenna 160 operable to facilitate electronic communication between the controller 130 and a remote source. Wireless antenna 160 may communicate through any appropriate wireless technique, such as, for example, radio frequency (RF), WiFi, microwave, and any appropriate IEEE standard technique. In one embodiment, for example, wireless sensors may detect various operational parameters of the pipeline 120, such as line pressure and/or chemical concentrate, and transmit such data to the controller 130 via the wireless antenna 160.

[0049] The communication module 140 receives and/or transmits data between a remote source via one or both of the communication bus 155 and wireless antenna 160. In some embodiments, only one of the bus 155 and antenna 160 is utilized in the system 100. For example, the communication module 140 may be a wireless modem operable to receive and transmit electronic data and signals from and to the remote source through the wireless antenna 160.

SitePro, Ex. 2006
TankLogix v. SitePro, IPR2025-00651

[0050] Translation module 145 is communicably coupled to the communication module 140 and the processor 150. Typically, translation module 145 receives data communicated in a particular communication protocol to the system 100 via the communication bus 155 and/or wireless antenna 160 and, when necessary, translates such data to a secondary communication protocol understood by the motor controller 115 or other components of the system 100. For instance, data may be sent to the controller 130 in many different protocols, such as RS-232, RS-485 (Modbus or EIA-485), RS-422 (or EIA-422), TCP/IP, Fieldbus, DeviceNet, and Profibus, to name but a few. The motor controller 115 may be configured to receive data in only one, or just a few, protocols (*e.g.*, a version of the Modbus serial communication protocol, such as Modbus RTU, Modbus ASCII, Modbus TCP/IP, Modbus TCP, Modbus over TCP/IP, Modbus over TCP, and/or Modbus Plus). Thus, the translation module 145 allows a remote source of data to be transmitted to the control 130 in a remote protocol without regard to the particular protocol understood by the motor controller 115.

[0051] Further, in some embodiments, the translation module 145 may allow a user or operator to connect to the controller 130 and receive feedback data (*e.g.*, operational data of the motor 110, pump 105, or any other component of the system 100) without regard to a particular protocol understood by the user's device (*i.e.*, computer, laptop, PDA, cell phone). In other words, the translation module 145 may perform two-way protocol translation between the system 100 and the user or operator. In such fashion, the user or operator may seamlessly communicate with the system 100 without any additional action required on the user's part.

[0052] Processor 150 performs any logical operation necessary for controlling, operating, or otherwise managing the system 100, and in particular, the motor controller 115 and thus motor 110 and pump 105. For instance, the processor 150 may receive one or more data signals representative of, for example, pipeline fluid line pressure, pipeline fluid flowrate, pipeline chemical percentage concentrate by volume or by weight, motor operating parameter (*e.g.*, amp draw, voltage, winding temperature) and transmit commands to the motor controller 115 based on such data. As one specific example, a wireless pressure sensor may be installed at a particular location in the pipeline 120. The sensor may periodically transmit the sensed line pressure to the controller 130 via the wireless antenna 160. When such sensed pressure falls below a minimum threshold, such as when a pipeline break occurs, the processor 150 may command the motor

SitePro, Ex. 2006
TankLogix v. SitePro, IPR2025-00651

controller 115 to stop or reduce the speed of the motor 110 and pump 105 so that additional chemicals are not injected into the pipeline 120 and wasted.

[0053] FIG. 2 illustrates a block diagram of a hydrocarbon production system 200 utilizing one or more chemical injection systems 210 in accordance with the present disclosure. In some embodiments, for instance, the one or more chemical injection systems 210 may be substantially similar to chemical injection system 100. System 200 includes one or more hydrocarbon production sites 215, each of which is fluidly coupled to a pipeline 205. At one or more of the sites 215, a chemical injection system 210 is also in fluid communication with the pipeline 205 and operates in accordance with the chemical injection system 100 described above. At a main (or side) branch of the pipeline 205, a monitoring module 225 detects one or more operational parameters of the hydrocarbon stream within the pipeline 205. The system 200 also includes a remote control center 220. As illustrated in FIG. 2, the chemical injection systems 210, monitoring module 225, and remote control center 220 may all be in wireless communication. Further, although a particular number of sites 215, injection systems 210, monitoring module 225, and control center 220 are shown, more or less of each component, as appropriate, may be utilized in keeping with the present disclosure.

[0054] In some embodiments, the production system 200 may operate as follows. Monitoring module 225 may include a number of wireless sensor devices operable to detect one or more operational parameters of the hydrocarbon stream within the pipeline 205. For instance, the module 225 may detect the relative amount of chemical additives injected into the pipeline 205 by the one or more chemical injection systems 210. Such data may be wirelessly transmitted directly to each chemical injection system 210 and/or the remote control center 220. In some embodiments, the data is communicated to the remote control center 220, where it is then processed. The remote control center 220 may then wirelessly issue commands to one or more of the chemical injection systems 210. Such commands may include a command to stop injecting chemical additive into the pipeline 205 and/or a command to inject a specified amount of chemical additive into the pipeline 205. Thus, in some embodiments, some or all of the processing of data and command generation may occur at the remote control center 220 rather than each individual chemical injection system 210. In certain embodiments, the remote control center 220 may control one or more chemical injection systems 210 without regard to data received from the monitoring module 225. For instance, the remote control center 220 may issue

SitePro, Ex. 2006
TankLogix v. SitePro, IPR2025-00651

commands to the chemical injection systems 210 to inject the chemical additives into the pipeline 205 at set intervals. Alternatively, the remote control center 220 may merely monitor and/or store data wirelessly communicated directly to the chemical injection systems 210 from the monitoring module 225. Upon receipt of such data, the chemical injection systems 210 may process the data and inject more or less chemical additive into the pipeline 205, as appropriate (as described above with reference to FIG. 1).

[0055] Further, in some embodiments, the remote control center 220 and/or the chemical injection systems 210 may account for the length of pipeline 205 between a particular chemical injection system 210 and the monitoring module 225. For instance, particular chemical injection systems 210 that are further away from the monitoring module 225 may inject more chemical additive into the pipeline 205 as compared to chemical injection systems 210 that are closer to the monitoring module 225. This may, in some embodiments, help ensure that the amount of chemical additive in the pipeline 205 is uniformly consistent.

[0056] FIG. 3 illustrates a schematic drawing of an example system 300 for managing one or more chemical injection systems 310. In the illustrated embodiment, the system 300 includes a computer 305 displaying a graphical user interface (GUI) 315, one or more remote chemical injection systems 310, and a base transceiver 325. Generally, system 300 may be used to detect one or more operational parameters of a hydrocarbon stream within a pipeline (such as pipeline 205) and inject chemicals (*e.g.*, corrosion inhibitors, ethanol, foamer) into the pipeline in response to or independent of the detected operational parameters. In addition, the system 300 may all for microprocessor-based remote monitoring and control of the one or more chemical injection systems 310 regardless of a communication protocol utilized by the chemical injection systems 310, the base transceiver 325, and/or the computer 305 (as well as other equipment present in system 300 but not illustrated in FIG. 3).

[0057] Computer 305 may be a standalone computing device, such as a laptop computer, personal digital assistant (PDA), handheld electronic mail device, desktop computer, server, or other computing device. Although illustrated as a laptop computer, reference to the computer 305 includes any processor-based computing device that is operable to manipulate, display, receive, and/or transmit data, such as data associated with a wellsite, hydrocarbon piping system, or other hydrocarbon production facility. For example, computer 305 may include a combination of software, middleware, and hardware, including one or more memory devices (*e.g.*, volatile or

SitePro, Ex. 2006
TankLogix v. SitePro, IPR2025-00651

non-volatile memory including, without limitation, magnetic media, optical media, random access memory (RAM), read-only memory (ROM), removable media, or any other suitable local or remote memory component). Computer 305 may store in memory and execute one or more software applications written or described in any appropriate computer language including C, C++, Java, Visual Basic, assembler, Perl, any suitable version of 4GL, as well as others, in order to manipulate, display, receive, and/or transmit data.

[0058] In some embodiments, the computer 305 may be located at a remote monitoring station, such as the station 320. Further computer 305 may be one of several computers at the remote monitoring station, where each computer 305 may monitor, receive data from, and/or generate commands transmitted to a single chemical injection system 310 or multiple chemical injection systems 310.

[0059] Each chemical injection system 310 may be positioned at or near a wellsite and/or a pipeline transporting hydrocarbon fluid. In some embodiments, the chemical injection system 310 may be substantially similar to chemical injection system 210 and/or chemical injection system 100 described above. For example, each chemical injection system 310 may include a pump mechanically coupled to a motor, a motor controller, a processor-based controller, and a chemical reservoir. Chemical injection system 310 may be used in such embodiments to inject or otherwise introduce chemicals (*e.g.*, corrosion inhibitors, ethanol, foamer) into a hydrocarbon conduit. The pump is fluidly coupled to hydrocarbon conduit and the reservoir and draws a specified amount of chemical stored in the reservoir and injects the chemical into the conduit at predefined time intervals, predetermined operating conditions, and/or when commanded. The pump is coupled to a motor, which is electrically coupled to the motor controller. The motor controller receives electrical power (such as, for example, from a solar power module at the chemical injection system 310, as illustrated) and provides the power to the motor. In some embodiments, the motor controller may be a combination starter/disconnect, which provides "on-off" control of electrical power to the pump motor, while in such embodiments, the motor controller may be a variable frequency controller, operable to provide electrical power to the pump motor at a variety of frequencies (and thus rotational motor speeds) as system operating conditions warrant. In some embodiments, the controller may communicate to the motor controller in only one, or just a few, communication protocols (*e.g.*, Modbus).

SitePro, Ex. 2006
TankLogix v. SitePro, IPR2025-00651

[0060] The controller is communicably coupled to the motor controller and, typically, provides microprocessor-based control of the motor controller and thus motor and pump of chemical injection system 310. In some embodiments, the controller is communicably coupled (*e.g.*, wirelessly, via wired communication, or a combination thereof) to one or more communication stations 320. For example, in some embodiments, data may be transmitted between the communication station 320 and the chemical injection system 310 via a particular communication protocol (*e.g.*, RS-232, RS-485 (Modbus or EIA-485), RS-422 (or EIA-422), TCP/IP, Fieldbus, DeviceNet, and Profibus, to name but a few)and over a certain communication form (*e.g.*, cellular, RF, satellite, or other type of communication form). One or more additional communication stations 320 may be interposed between the communication station in direct communication with the chemical injection system 310 and a base transceiver 325. For example, the communication stations 320 may be radio frequency (RF) transceivers that are operable to send and receive RF signals 335 representative of data and/or commands between the chemical injection systems 310 and the base transceiver 325.

[0061] The base transceiver 325 receives and/or consolidates data received from the chemical injection systems 310 via the communication stations 320. The base transceiver 325 may also receive and/or consolidate commands to the chemical injection systems 310 from the computer 305 (or other computing device). In the illustrated embodiment, the base transceiver 325 may communicate with the computer 305 over a communications network 330. For example, the communications network 330 may be all or a portion of an enterprise or secured network; a VPN merely between computer 305 and other computing devices communicably coupled to the base transceiver 325; one or more local area networks (LANs), radio access networks (RANs), metropolitan area networks (MANs), wide area networks (WANs), all or a portion of the global computer network known as the Internet; and/or any other communication system or systems at one or more locations.

[0062] The GUI 315, in the illustrated embodiment, displays one or more variables or data for monitoring, managing, or otherwise controlling the chemical injection systems 310. For example, in the illustrated embodiment, the GUI 315 may display a level of a chemical reservoir at the chemical injection system 310; power capacity and/or availability of a pump motor at the chemical injection system 310; one or more pump or pump motor characteristics (*e.g.*, amps,

SitePro, Ex. 2006
TankLogix v. SitePro, IPR2025-00651

current status, pressure, as well as other parameters). The GUI 315 may also display other information in the illustrated format or in different formats.

[0063] In operation, a user or operator may utilize the GUI 315 to control one or more components of the chemical injection system 310 based on data received from the system 310 and displayed on the GUI 315. For example, each chemical injection system 310 may include a number of wireless sensor devices operable to detect one or more operational parameters of the hydrocarbon stream within the pipeline. For instance, the system 310 may detect the relative amount of chemical additives injected into the pipeline. In some embodiments, the data is communicated to the computer 305 via the communication stations 320, base transceiver 325, and communications network 330, where it is then processed. The computer 305 and/or a user operating the computer 305 may then issue commands to one or more of the chemical injection systems 310. Such commands may include a command to stop injecting chemical additive into the pipeline and/or a command to inject a specified amount of chemical additive into the pipeline.

[0064] Turning to FIGS. 4A-D, other example GUIs 400, 410, 420, and 430 are illustrated. One or more of GUIs 400, 410, 420, and 430 may be displayed on the computer 305 in place of or in addition to GUI 315. Further, GUIs 400, 410, 420, and 430 may show additional information associated with the chemical injection system 310. For example, GUI 400 provides information related to temperature of fluid flowing through the pipeline and/or from chemical reservoir; flow rate of fluid flowing through the pipeline and/or from chemical reservoir; fluidic pressure of fluid flowing through the pipeline and/or from chemical reservoir; fluidic storage level of the chemical reservoir; a corrosion rate of the pipeline or other hydrocarbon transmission system; and a percentage water content of fluid flowing through the pipeline. GUI 410 provides information related to battery characteristics of the chemical injection system 310, as well as characteristics of the pipeline and/or other hydrocarbon transmission system. GUI 420 provides information related to motor characteristics of a motor in the chemical injection system 310. GUI 430 provides information related to additional operational characteristics of a pump and/or motor in the chemical injection system 310, as well as example fault information of the chemical injection system 310.

[0065] Returning to FIG. 3, in certain embodiments, the computer 305 may control one or more chemical injection systems 310 without regard to data received from the systems 310 (or

SitePro, Ex. 2006
TankLogix v. SitePro, IPR2025-00651

other monitoring systems). For instance, the computer 305 may issue commands to the chemical injection systems 310 to inject the chemical additives into the pipeline at set intervals. Alternatively, the computer 305 may merely monitor and/or store data wirelessly communicated directly to the chemical injection systems 310. Upon receipt of such data, the chemical injection systems 310 may process the data and inject more or less chemical additive into the pipeline.

[0066] A number of embodiments have been described, and several others have been mentioned or suggested. Other embodiments are within the scope of the disclosure and claims. Some of the advantages of the chemical injection systems described herein have been discussed throughout this disclosure. Furthermore, those skilled in the art will readily recognize additional advantages that a variety of additions, deletions, alterations, and substitutions may be made to these embodiments.

.

SitePro, Ex. 2006
TankLogix v. SitePro, IPR2025-00651

WHAT IS CLAIMED IS:

1. A method for controlling a chemical injection system for a hydrocarbon transmission system comprising:

providing a chemical injection system comprising:

a pump driven by a motor and in fluid communication with a chemical reservoir and the hydrocarbon transmission system, the pump adapted to inject one or more chemical fluids into the hydrocarbon transmission system;

a motor controller coupled to the motor and adapted to control operation of the motor; and

a controller communicably coupled to the motor controller;

receiving an operational command at the chemical injection system in a first communication protocol from a remote computer;

translating, at the controller, the operational command at the first communication protocol to an operational command at a second communication protocol different than the first communication protocol;

transmitting the operational command at the second communication protocol from the controller to the motor controller; and

adjusting the motor controller to control the operation of the motor in response to receiving the operational command at the second communication protocol from the controller.

2. The method of claim 1, further comprising:

receiving a second operational command at the chemical injection system in a third communication protocol from the remote computer;

translating, at the controller, the second operational command at the third communication protocol to second operational command at the second communication protocol different than the third communication protocol;

transmitting the second operational command at the second communication protocol from the controller to the motor controller; and

adjusting the motor controller to control the operation of the motor in response to receiving the second operational command at the second communication protocol from the controller.

SitePro, Ex. 2006
TankLogix v. SitePro, IPR2025-00651

3. The method of claim 2, further comprising:

monitoring at least one parameter of the hydrocarbon transmission system by the chemical injection system;

transmitting the parameter to the remote computer; and

receiving a fourth operational command at one of the first or third communication protocols from the remote computer in response to the parameter.

4. The method of claim 3, wherein the parameter comprises one of the following:

a fluidic pressure in the hydrocarbon transmission system;

a fluidic flowrate in the hydrocarbon transmission system;

a percentage concentration by weight or volume of chemical fluid in the hydrocarbon transmission system;

an operational parameter of the motor;

a controller temperature;

a battery voltage;

a motor current;

a solar cell charge current; and

one or more fault conditions.

5. The method of claim 3, further comprising:

measuring the parameter with a sensor positioned in the hydrocarbon transmission system; and

wirelessly transmitting a signal representative of the parameter from the sensor to the chemical injection system.

SitePro, Ex. 2006
TankLogix v. SitePro, IPR2025-00651

6. The method of claim 1, wherein the chemical fluids comprise at least one of:

a corrosion inhibitor;

a paraffin inhibiter;

a demulsifier;

an ethanol; and

a foamer.

7. The method of claim 1, wherein receiving an operational command at the chemical injection system in a first communication protocol from a remote computer comprises receiving an operational command at the chemical injection system in a first communication protocol from a remote computer via a radio frequency RF signal.

8. The method of claim 1, further comprising:

receiving a signal representative of a sensed parameter of the hydrocarbon transmission system in the second communication protocol;

translating the parameter in the second communication protocol to a signal representative of the sensed parameter in the first communication protocol; and

transmitting the signal representative of the sensed parameter in the first communication protocol to the remote computer.

9. The method of claim 1, wherein adjusting the motor controller to control the operation of the motor in response to receiving the operational command at the second communication protocol from the controller comprises adjusting a rotational speed of the motor.

10. The method of claim 1, further comprising:

providing a sensor coupled to the hydrocarbon transmission system and adapted to monitor an operational parameter of the system;

receiving a signal representative of the operational parameter at the controller from the sensor; and

automatically adjusting the motor controller to adjust a rotational speed of the motor in response to receiving the signal representative of the operational parameter.

SitePro, Ex. 2006
TankLogix v. SitePro, IPR2025-00651

11. The method of claim 1, further comprising:

providing a second chemical injection system comprising:

a second pump driven by a second motor and in fluid communication with the chemical reservoir and the hydrocarbon transmission system, the second pump adapted to inject one or more chemical fluids into the hydrocarbon transmission system;

a second motor controller coupled to the second motor and adapted to control operation of the second motor; and

a second controller communicably coupled to the second motor controller;

receiving a third operational command at the second chemical injection system in the first communication protocol from the remote computer;

translating, at the second controller, the third operational command at the first communication protocol to a third operational command at the second communication;

transmitting the third operational command at the second communication protocol from the second controller to the second motor controller; and

adjusting the second motor controller to control the operation of the second motor in response to receiving the third operational command at the second communication protocol from the second controller.

12. A chemical injection system for a hydrocarbon pipeline comprising:

a pump in fluid communication with a chemical reservoir and the pipeline;

a motor coupled to the pump and adapted to drive the pump to transfer a chemical fluid from the reservoir to the pipeline;

a motor controller electrically coupled to a power module and the motor, the motor controller adapted to adjust a rotational speed of the motor; and

a central controller communicably coupled to the motor controller and a remote computing device, the controller comprising a translator adapted to receive a signal from the remote computing device in a first communication protocol and translate the signal from the remote computing device to a command in a second communication protocol distinct from the first communication protocol, the command operable to adjust the motor controller to adjust the rotational speed of the motor.

13. The system of claim 12, wherein the motor controller comprises a variable frequency drive.

14. The system of claim 12, wherein the translator is further adapted to receive a signal from the remote computing device in a third communication protocol and translate the signal from the remote computing device to a second command in the second communication protocol distinct from the third and the first communication protocols, the second command operable to adjust the motor controller to adjust the rotational speed of the motor.

15. The system of claim 12, further comprising a receiver communicably coupled to the central controller and adapted to receive the signal from the remote computing device, the signal comprising a radio frequency (RF) signal.

16. The system of claim 15, wherein the receiver is adapted to receive a second signal from a remote sensor coupled to the pipeline.

SitePro, Ex. 2006
TankLogix v. SitePro, IPR2025-00651

17. The system of claim 16, wherein the controller is further adapted to receive the second signal from the remote sensor through the receiver and transmit the second signal to the remote computing device.

18. The system of claim 17, wherein the translator is adapted to receive the second signal from the receiver, the second signal in the second communication protocol, and translate the second signal to a third signal in the first communication protocol.

19. The system of claim 17, wherein the second signal comprises one of:

a fluidic pressure in the pipeline;

a fluidic flowrate in the pipeline;

a percentage concentration by weight or volume of chemical fluid in the pipeline; and

an operational parameter of the motor.

20. The system of claim 12, wherein the second communication protocol comprises a Modbus protocol.

21. A system comprising:

a remote computing system comprising a graphical user interface (GUI);

a sensor coupled with a hydrocarbon transmission system; and

a chemical injection system, comprising:

a pump in fluid communication with a chemical reservoir and the hydrocarbon transmission system;

a motor coupled to the pump and adapted to drive the pump to transfer a chemical fluid from the reservoir to the hydrocarbon transmission system;

a power module adapted to receive solar power and convert the solar power to electrical power;

a motor controller electrically coupled to the power module and the motor, the motor controller adapted to adjust a rotational speed of the motor; and

a central controller communicably coupled to the motor controller, the central controller communicably coupled to the remote computing system and the sensor, the controller comprising a translator adapted to receive a signal from the remote computing system in a first communication protocol and translate the signal from the remote computing system to a command in a second communication protocol distinct from the first communication protocol, the command operable to adjust the motor controller to adjust the rotational speed of the motor.

22. The system of claim 21, wherein the GUI is adapted to display one or more operational parameters of the chemical injection system.

23. The system of claim 21, further comprising a transceiver communicably coupled to the remote computing station through a communications network, the transceiver in RF communication with the chemical injection system.

24. The system of claim 23, further comprising one or more communication stations in RF communication with the chemical injection system and the transceiver, each communication station adapted to relay operational parameters of the chemical injection system in the form of RF signals between the transceiver and the chemical injection system.

SitePro, Ex. 2006
TankLogix v. SitePro, IPR2025-00651

25. The system of claim 21, further comprising:

a second sensor coupled with the hydrocarbon transmission system; and

a second chemical injection system, comprising:

a pump in fluid communication with the chemical reservoir and the hydrocarbon transmission system;

a motor coupled to the pump and adapted to drive the pump to transfer the chemical fluid from the reservoir to the hydrocarbon transmission system;

a power module;

a motor controller electrically coupled to the power module and the second motor, the motor controller adapted to adjust a rotational speed of the motor; and

a central controller communicably coupled to the motor controller, the central controller communicably coupled to the remote computing system and the second sensor, the controller comprising a translator adapted to receive a signal from the remote computing system in the first communication protocol and translate the signal from the remote computing system to a command in the second communication protocol distinct from the first communication protocol, the command operable to adjust the motor controller to adjust the rotational speed of the motor.

ABSTRACT

A chemical injection system includes a pump in fluid communication with a chemical reservoir and a pipeline; a motor coupled to the pump and adapted to drive the pump to transfer a chemical fluid from the reservoir to the pipeline; a motor controller electrically coupled to a power module and the motor and adapted to adjust a rotational speed of the motor; and a central controller communicably coupled to the motor controller and a remote computing device. The controller includes a translator adapted to receive a signal from the remote computing device in a first communication protocol and translate the signal from the remote computing device to a command in a second communication protocol distinct from the first communication protocol, where the command is operable to adjust the motor controller to adjust the rotational speed of the motor.

90438758.doc

SitePro, Ex. 2006
TankLogix v. SitePro, IPR2025-00651

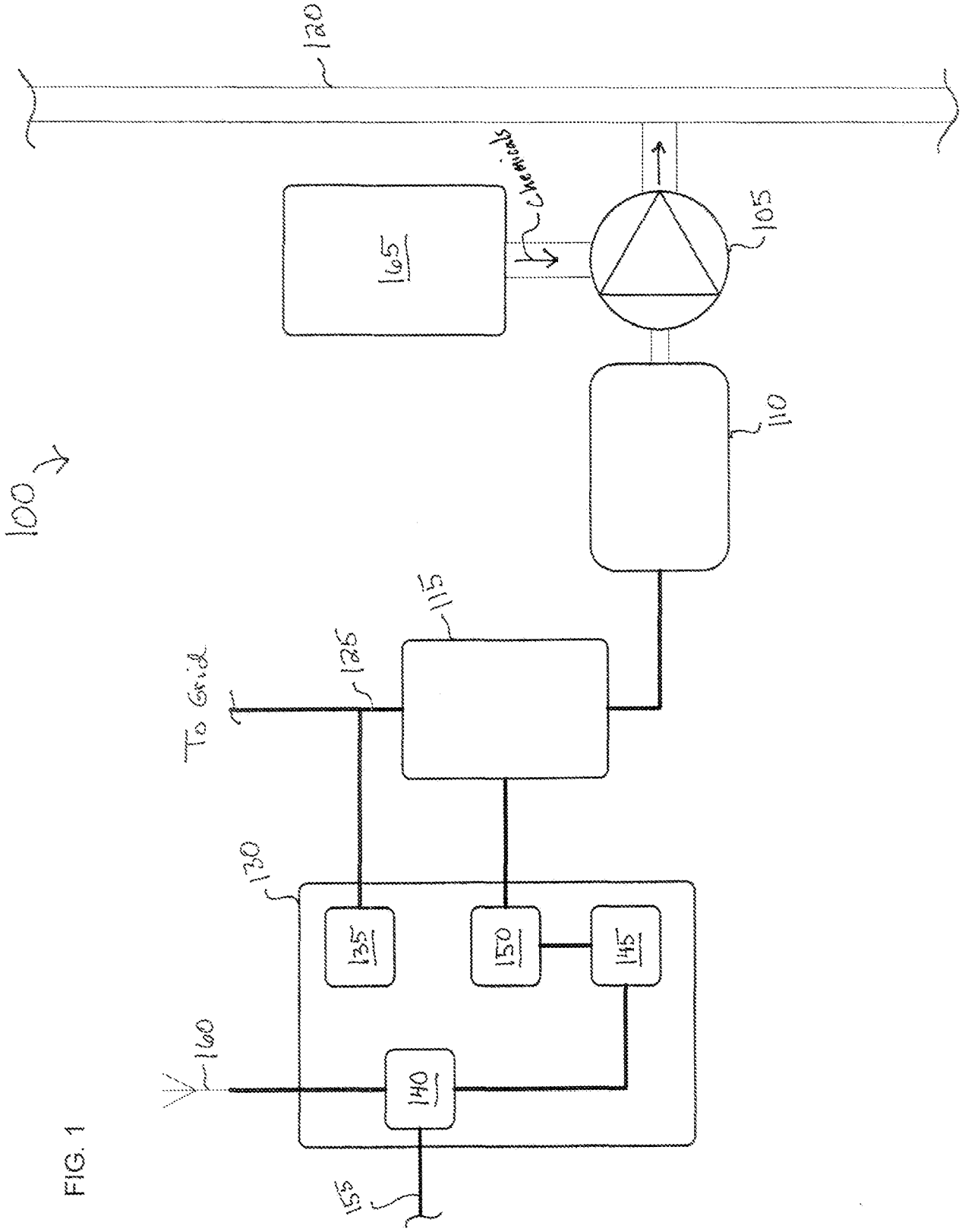

FIG. 1

SitePro, Ex. 2006
TankLogix v. SitePro, IPR2025-00651

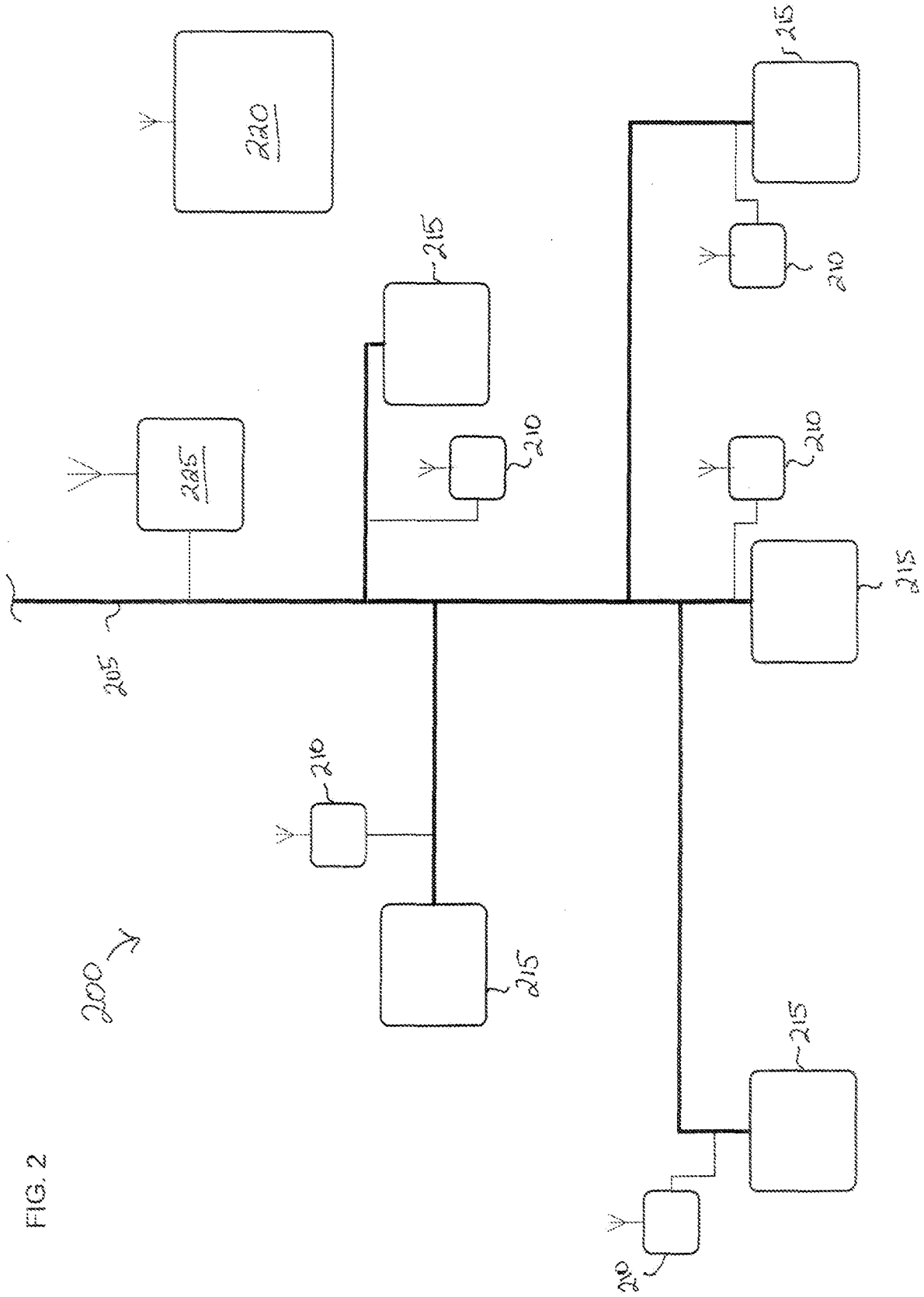

FIG. 2

SitePro, Ex. 2006
TankLogix v. SitePro, IPR2025-00651

Fig 3

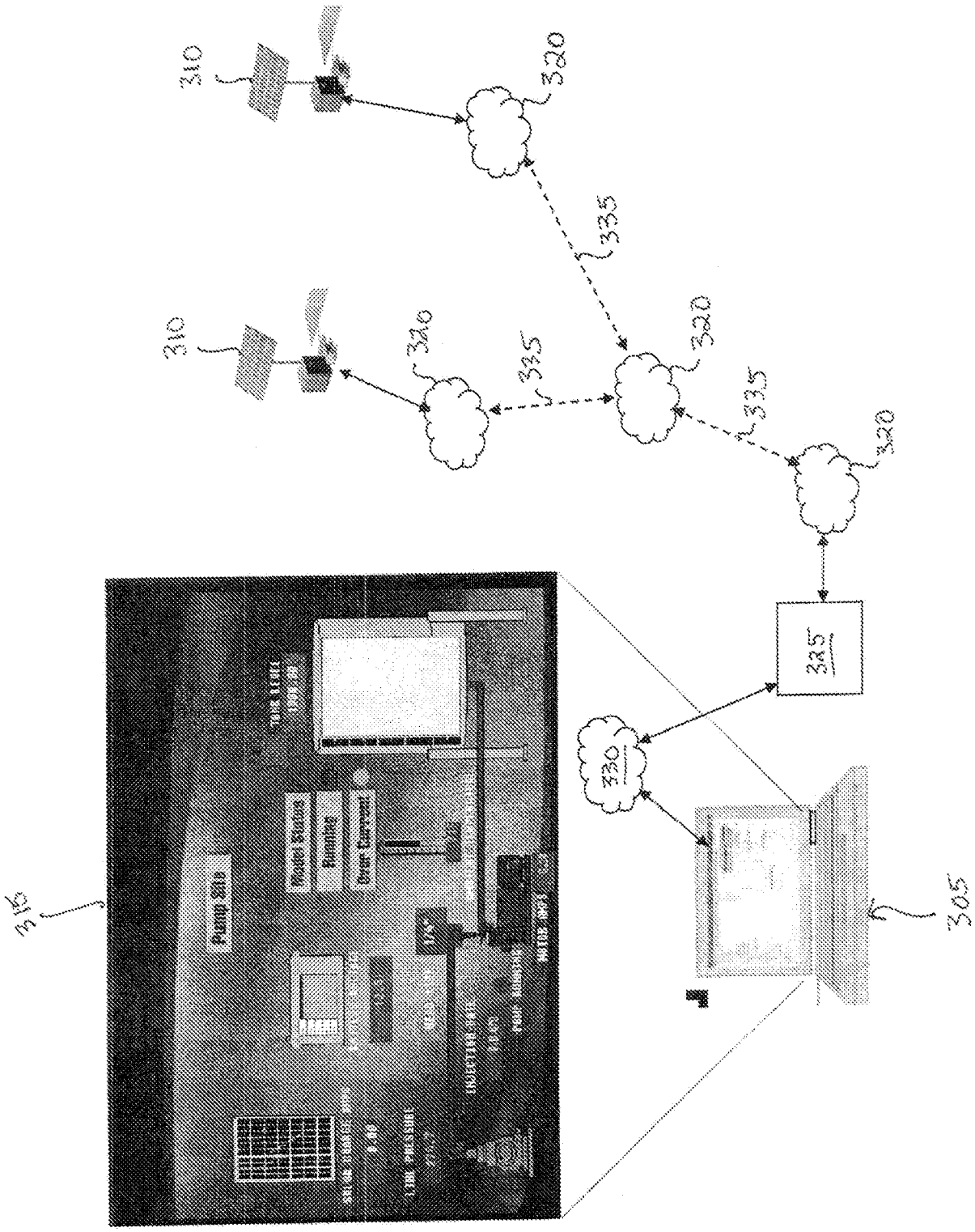
310
320
335
310
320
335
320
335
320
325
330
305
315
Pump Site
Model Status
Running
Over Current

FIG. 4A

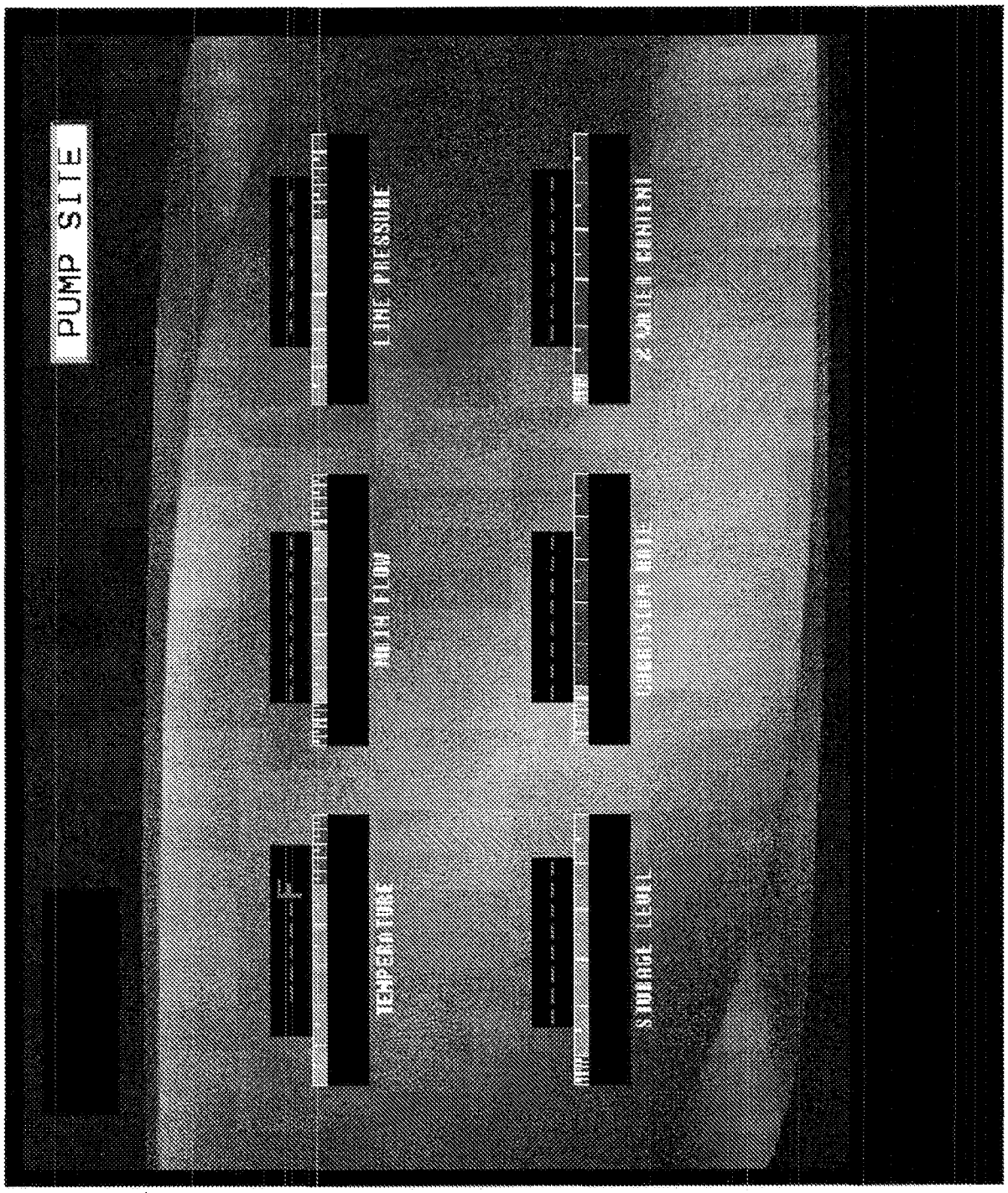

400

FIG. 4B

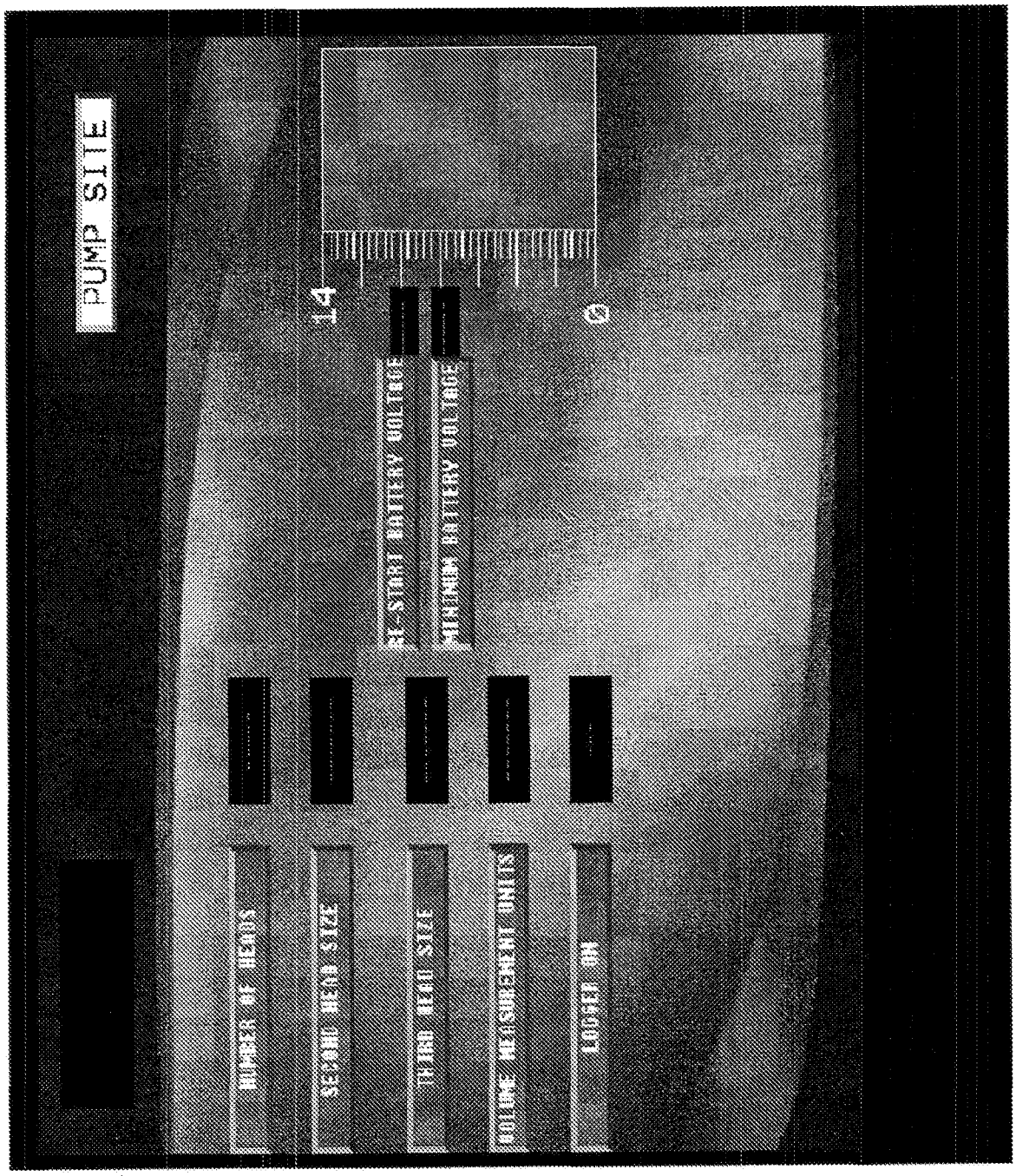

410

SitePro, Ex. 2006
TankLogix v. SitePro, IPR2025-00651

FIG. 4C

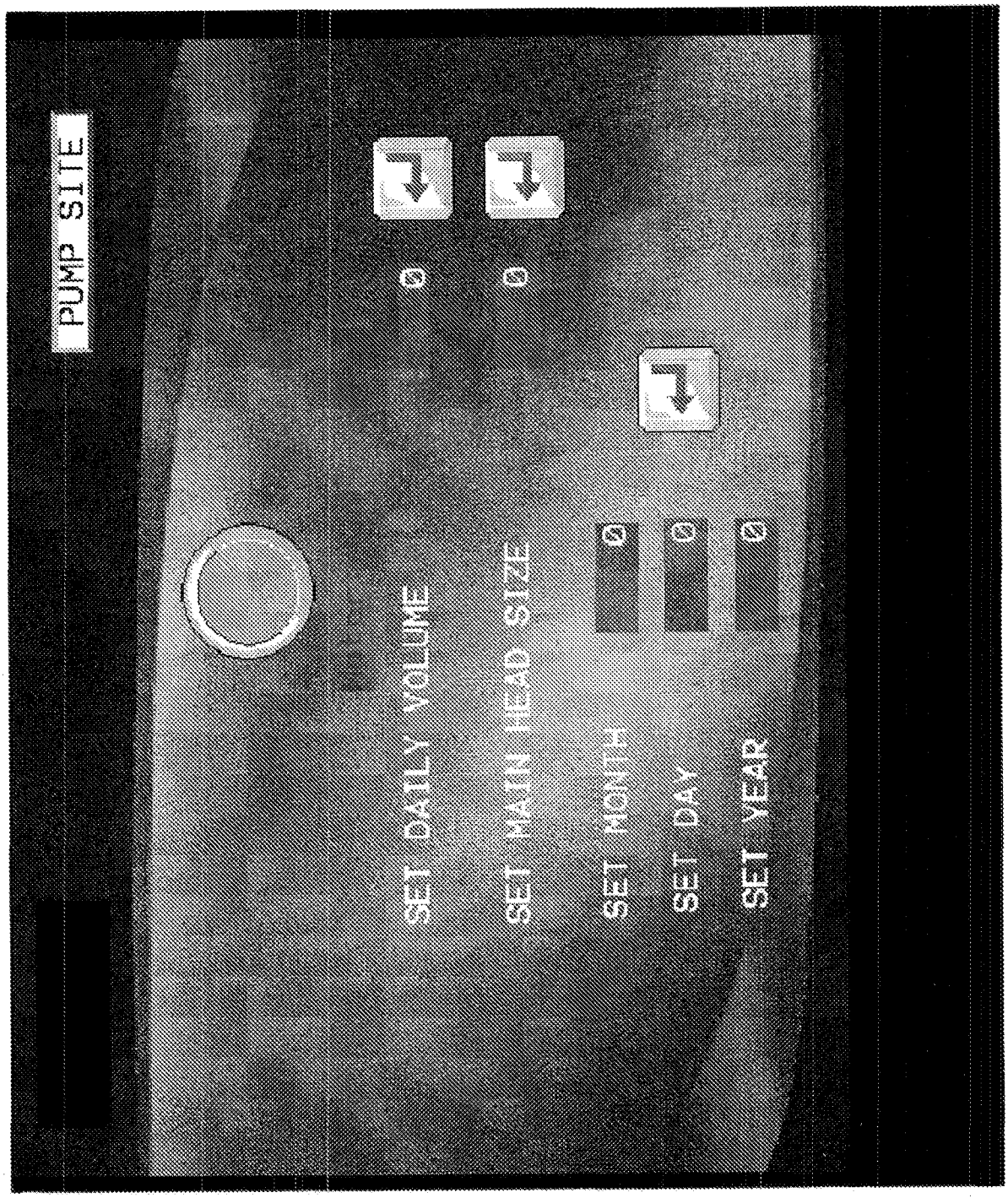
PUMP SITE
SET DAILY VOLUME
0
SET MAIN HEAD SIZE
0
SET MONTH
0
SET DAY
0
SET YEAR
0

420

FIG. 4D

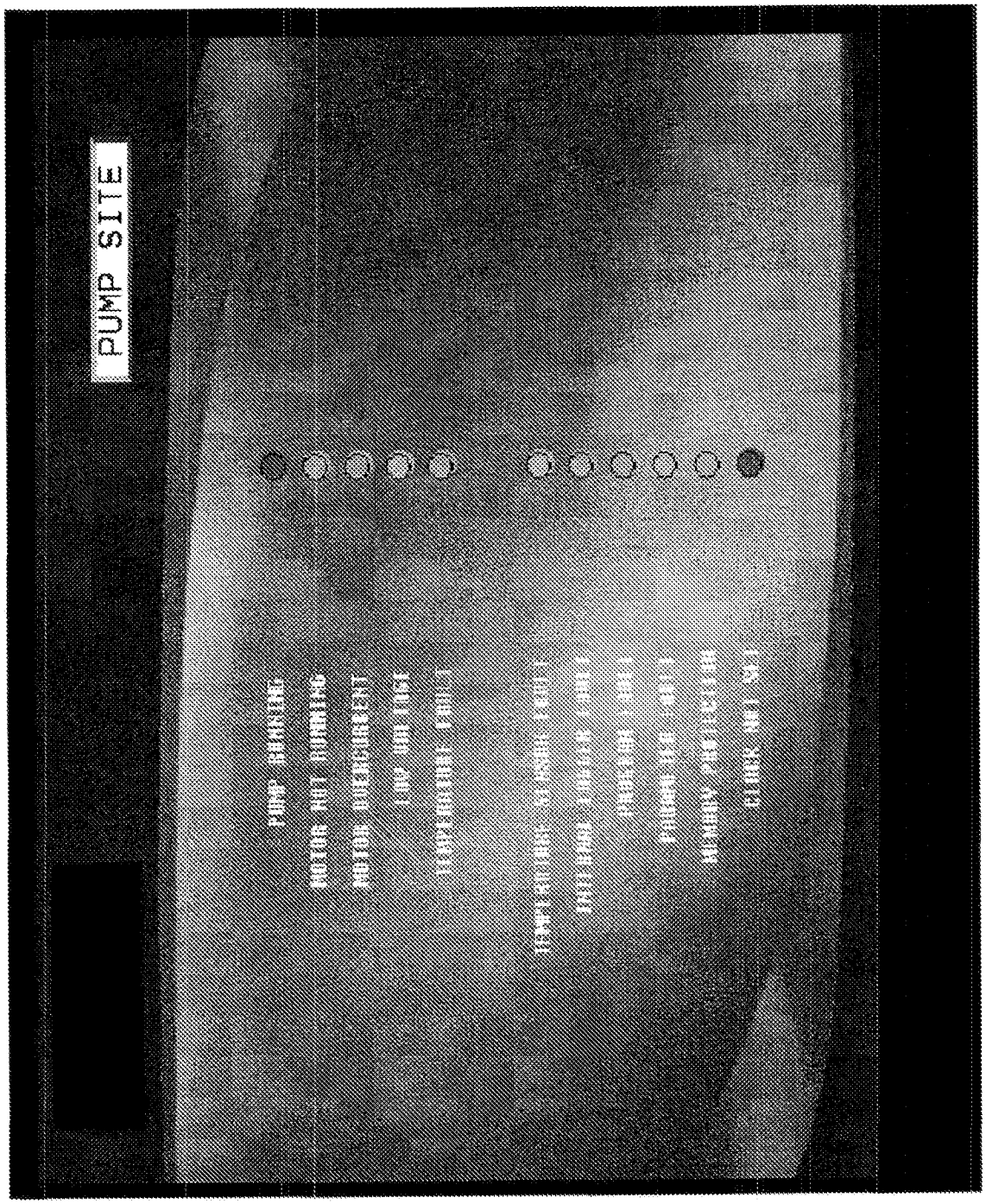

430

SitePro, Ex. 2006
TankLogix v. SitePro, IPR2025-00651

Substitute Form PTO-1449 (Modified) U.S. Department of Commerce Patent and Trademark Office	Attorney Docket No. 15825-0243001	Application No.
Information Disclosure Statement by Applicant (Use several sheets if necessary)	Applicant Gutierrez et al.	
(37 CFR §1.98(b))	Filing Date June 7, 2010	Group Art Unit

U.S. Patent Documents

Examiner Initial	Desig. ID	Document Number	Publication Date	Patentee	Class	Subclass	Filing Date If Appropriate
	1	6,131,125	10/10/2000	Rostoker et al.			
	2	6,886,414	05/03/2005	Gutierrez et al.			
	3	7,349,813	03/25/2008	Gutierrez et al.			
	4	7,659,712	02/09/2010	Gutierrez			
	5	20070161367	07/12/2007	Dobrowski et al.			
	6	20070175640	08/02/2007	Atencio et al.			
	7						
	8						
	9						
	10						
	11						

Foreign Patent Documents or Published Foreign Patent Applications

Examiner Initial	Desig. ID	Document Number	Publication Date	Country or Patent Office	Class	Subclass	Translation Yes	Translation No
	12							
	13							
	14							
	15							
	16							

Other Documents (include Author, Title, Date, and Place of Publication)

Examiner Initial	Desig. ID	Document
	17	
	18	
	19	
	20	

Examiner Signature	Date Considered
EXAMINER: Initials citation considered. Draw line through citation if not in conformance and not considered. Include copy of this form with next communication to applicant.	

Substitute Disclosure Form (PTO-1449)

SitePro, Ex. 2006
TankLogix v. SitePro, IPR2025-00651

Electronic Patent Application Fee Transmittal

Application Number:	
Filing Date:	
Title of Invention:	Chemical Injection System
First Named Inventor/Applicant Name:	Francisco M. Gutierrez
Filer:	Matthew K. Wernli/Karen Vertz
Attorney Docket Number:	15825-0243001

Filed as Large Entity

Utility under 35 USC 111(a) Filing Fees

Description	Fee Code	Quantity	Amount	Sub-Total in USD($)
Basic Filing:				
Utility application filing	1011	1	330	330
Utility Search Fee	1111	1	540	540
Utility Examination Fee	1311	1	220	220
Pages:				
Claims:				
Claims in excess of 20	1202	5	52	260
Miscellaneous-Filing:				
Petition:				

SitePro, Ex. 2006
TankLogix v. SitePro, IPR2025-00651

Description	Fee Code	Quantity	Amount	Sub-Total in USD($)
Patent-Appeals-and-Interference:				
Post-Allowance-and-Post-Issuance:				
Extension-of-Time:				
Miscellaneous:				
			Total in USD ($)	**1350**

SitePro, Ex. 2006
TankLogix v. SitePro, IPR2025-00651

Electronic Acknowledgement Receipt

EFS ID:	7756091
Application Number:	12794898
International Application Number:	
Confirmation Number:	9904
Title of Invention:	Chemical Injection System
First Named Inventor/Applicant Name:	Francisco M. Gutierrez
Customer Number:	26231
Filer:	Matthew K. Wernli/Susan Williams
Filer Authorized By:	Matthew K. Wernli
Attorney Docket Number:	15825-0243001
Receipt Date:	07-JUN-2010
Filing Date:	
Time Stamp:	12:50:56
Application Type:	Utility under 35 USC 111(a)

Payment information:

Submitted with Payment	yes
Payment Type	Deposit Account
Payment was successfully received in RAM	$1350
RAM confirmation Number	10100
Deposit Account	061050
Authorized User	

File Listing:

Document Number	Document Description	File Name	File Size(Bytes)/ Message Digest	Multi Part / zip	Pages (if appl.)

SitePro, Ex. 2006
TankLogix v. SitePro, IPR2025-00651

1	Transmittal of New Application	15825-0243001_ApplicationTransmittal.pdf	53718 71270fee9bb47d0121d9b527ce3eebae89fee147	no	2
Warnings:					
Information:					
2	Application Data Sheet	15825-0243001_ADS.pdf	37738 508a3d297ce41b12efc5fa90dbc78264b5101381	no	4
Warnings:					
Information:					
This is not an USPTO supplied ADS fillable form					
3	Transmittal Letter	15825-0243001_IDSTransmittal.pdf	17746 5c056892d2e4c69e14c95d62f74937677a427f67	no	1
Warnings:					
Information:					
4	Oath or Declaration filed	15825-0243001_Declaration.pdf	65121 3a463030f09f1ce7160ce71846531815382ed3ec	no	2
Warnings:					
Information:					
5		15825-0243001_Specification.pdf	114857 17822935fb095cb5eb801d488ed0d525cc224f78	yes	30

Multipart Description/PDF files in .zip description

Document Description	Start	End
Specification	1	21
Claims	22	29
Abstract	30	30

Warnings:					
Information:					
6	Drawings-only black and white line drawings	15825-0243001_Drawings.pdf	6059925 3965dd487203aee75f784ff04e68ea34fe928041	no	7
Warnings:					
Information:					
7	Information Disclosure Statement (IDS) Filed (SB/08)	15825-0243001_FormPTO1449.pdf	24633 c86c229f397b2be5699a3714def04896b9d76169	no	1
Warnings:					
Information:					

SitePro, Ex. 2006
TankLogix v. SitePro, IPR2025-00651

This is not an USPTO supplied IDS fillable form					
8	Fee Worksheet (PTO-875)	fee-info.pdf	36109 6106dbddd7f2108cbb64ae2183fcc3245811 7bba	no	2
Warnings:					
Information:					
			Total Files Size (in bytes):	6409847	

This Acknowledgement Receipt evidences receipt on the noted date by the USPTO of the indicated documents, characterized by the applicant, and including page counts, where applicable. It serves as evidence of receipt similar to a Post Card, as described in MPEP 503.

New Applications Under 35 U.S.C. 111
If a new application is being filed and the application includes the necessary components for a filing date (see 37 CFR 1.53(b)-(d) and MPEP 506), a Filing Receipt (37 CFR 1.54) will be issued in due course and the date shown on this Acknowledgement Receipt will establish the filing date of the application.

National Stage of an International Application under 35 U.S.C. 371
If a timely submission to enter the national stage of an international application is compliant with the conditions of 35 U.S.C. 371 and other applicable requirements a Form PCT/DO/EO/903 indicating acceptance of the application as a national stage submission under 35 U.S.C. 371 will be issued in addition to the Filing Receipt, in due course.

New International Application Filed with the USPTO as a Receiving Office
If a new international application is being filed and the international application includes the necessary components for an international filing date (see PCT Article 11 and MPEP 1810), a Notification of the International Application Number and of the International Filing Date (Form PCT/RO/105) will be issued in due course, subject to prescriptions concerning national security, and the date shown on this Acknowledgement Receipt will establish the international filing date of the application.

SitePro, Ex. 2006
TankLogix v. SitePro, IPR2025-00651

SCORE Placeholder Sheet for IFW Content

Application Number: 12794898 Document Date: 6/7/2010

The presence of this form in the IFW record indicates that the following document type was received in electronic format on the date identified above. This content is stored in the SCORE database.

- Drawings – Other than Black and White Line Drawings

Since this was an electronic submission, there is no physical artifact folder, no artifact folder is recorded in PALM, and no paper documents or physical media exist. The TIFF images in the IFW record were created from the original documents that are stored in SCORE.

To access the documents in the SCORE database, refer to instructions developed by SIRA.

At the time of document entry (noted above):

- Examiners may access SCORE content via the eDAN interface.
- Other USPTO employees can bookmark the current SCORE URL (http://es/ScoreAccessWeb/).
- External customers may access SCORE content via the Public and Private PAIR interfaces.

Form Revision Date: February 8, 2006

SitePro, Ex. 2006
TankLogix v. SitePro, IPR2025-00651

Date: 06/07/10

Approved for use through 7/31/2006. OMB 0651-0032
U.S. Patent and Trademark Office; U.S. DEPARTMENT OF COMMERCE

Under the Paperwork Reduction Act of 1995, no persons are required to respond to a collection of information unless it displays a valid OMB control number.

PATENT APPLICATION FEE DETERMINATION RECORD

Substitute for Form PTO-875

Application or Docket Number: 12/794,898

APPLICATION AS FILED – PART I

FOR	(Column 1) NUMBER FILED	(Column 2) NUMBER EXTRA	SMALL ENTITY RATE ($)	SMALL ENTITY FEE ($)	OR	OTHER THAN SMALL ENTITY RATE ($)	OTHER THAN SMALL ENTITY FEE ($)
BASIC FEE (37 CFR 1.16(a), (b), or (c))	N/A	N/A	N/A			N/A	330
SEARCH FEE (37 CFR 1.16(k), (i), or (m))	N/A	N/A	N/A			N/A	540
EXAMINATION FEE (37 CFR 1.16(o), (p), or (q))	N/A	N/A	N/A			N/A	220
TOTAL CLAIMS (37 CFR 1.16(i))	25 minus 20 =	5	x$26		OR	x$52	260
INDEPENDENT CLAIMS (37 CFR 1.16(h))	3 minus 3 =	*	x$110			x$220	
APPLICATION SIZE FEE (37 CFR 1.16(s))	If the specification and drawings exceed 100 sheets of paper, the application size fee due is $270 ($135 for small entity) for each additional 50 sheets or fraction thereof. See 35 U.S.C. 41(a)(1)(G) and 37 CFR						
MULTIPLE DEPENDENT CLAIM PRESENT (37 CFR 1.16(j))			195			390	
			TOTAL			TOTAL	1350

* If the difference in column 1 is less than zero, enter "0" in column 2.

APPLICATION AS AMENDED – PART II

		(Column 1) CLAIMS REMAINING AFTER AMENDMENT		(Column 2) HIGHEST NUMBER PREVIOUSLY PAID FOR	(Column 3) PRESENT EXTRA	SMALL ENTITY RATE ($)	SMALL ENTITY ADDI-TIONAL FEE ($)	OR	OTHER THAN SMALL ENTITY RATE ($)	OTHER THAN SMALL ENTITY ADDI-TIONAL FEE ($)
AMENDMENT A	Total (37 CFR 1.16(i))	*	Minus	**	=	x =		OR	x =	
AMENDMENT A	Independent (37 CFR 1.16(h))	*	Minus	***	=	x =		OR	x =	
AMENDMENT A	Application Size Fee (37 CFR 1.16(s))									
AMENDMENT A	FIRST PRESENTATION OF MULTIPLE DEPENDENT CLAIM (37 CFR 1.16(j))					N/A		OR	N/A	
						TOTAL ADD'T FEE		OR	TOTAL ADD'T FEE	

		(Column 1) CLAIMS REMAINING AFTER AMENDMENT		(Column 2) HIGHEST NUMBER PREVIOUSLY PAID FOR	(Column 3) PRESENT EXTRA	RATE ($)	ADDI-TIONAL FEE ($)	OR	RATE ($)	ADDI-TIONAL FEE ($)
AMENDMENT B	Total (37 CFR 1.16(i))	*	Minus	**	=	x =		OR	x =	
AMENDMENT B	Independent (37 CFR 1.16(h))	*	Minus	***	=	x =		OR	x =	
AMENDMENT B	Application Size Fee (37 CFR 1.16(s))									
AMENDMENT B	FIRST PRESENTATION OF MULTIPLE DEPENDENT CLAIM (37 CFR 1.16(j))					N/A		OR	N/A	
						TOTAL ADD'T FEE		OR	TOTAL ADD'T FEE	

* If the entry in column 1 is less than the entry in column 2, write "0" in column 3.
** If the "Highest Number Previously Paid For" IN THIS SPACE is less than 20, enter "20".
*** If the "Highest Number Previously Paid For" IN THIS SPACE is less than 3, enter "3".
The "Highest Number Previously Paid For" (Total or Independent) is the highest number found in the appropriate box in column 1.

This collection of information is required by 37 CFR 1.16. The information is required to obtain or retain a benefit by the public which is to file (and by the USPTO to process) an application. Confidentiality is governed by 35 U.S.C. 122 and 37 CFR 1.14. This collection is estimated to take 12 minutes to complete, including gathering, preparing, and submitting the completed application form to the USPTO. Time will vary depending upon the individual case. Any comments on the amount of time you require to complete this form and/or suggestions for reducing this burden, should be sent to the Chief Information Officer, U.S. Paten and Trademark Office, U.S. Department of Commerce, P.O. Box 1450, Alexandria, VA 22313-1450. DO NOT SEND FEES OR COMPLETED FORMS TO THIS ADDRESS. **SEND TO: Commissioner for Patents, P.O. Box 1450, Alexandria, VA 22313-1450.**

If you need assistance in completing the form, call 1-800-PTO-9199 and select option 2.

SitePro, Ex. 2006
TankLogix v. SitePro, IPR2025-00651

UNITED STATES PATENT AND TRADEMARK OFFICE

UNITED STATES DEPARTMENT OF COMMERCE
United States Patent and Trademark Office
Address: COMMISSIONER FOR PATENTS
P.O. Box 1450
Alexandria, Virginia 22313-1450
www.uspto.gov

APPLICATION NUMBER	FILING or 371(c) DATE	GRP ART UNIT	FIL FEE REC'D	ATTY.DOCKET.NO	TOT CLAIMS	IND CLAIMS
12/794,898	06/07/2010	2837	1350	15825-0243001	25	3

CONFIRMATION NO. 9904

26231
FISH & RICHARDSON P.C.
P.O. BOX 1022
MINNEAPOLIS, MN 55440-1022

FILING RECEIPT

OC000000042125407

Date Mailed: 06/18/2010

Receipt is acknowledged of this non-provisional patent application. The application will be taken up for examination in due course. Applicant will be notified as to the results of the examination. Any correspondence concerning the application must include the following identification information: the U.S. APPLICATION NUMBER, FILING DATE, NAME OF APPLICANT, and TITLE OF INVENTION. Fees transmitted by check or draft are subject to collection. Please verify the accuracy of the data presented on this receipt. **If an error is noted on this Filing Receipt, please submit a written request for a Filing Receipt Correction. Please provide a copy of this Filing Receipt with the changes noted thereon. If you received a "Notice to File Missing Parts" for this application, please submit any corrections to this Filing Receipt with your reply to the Notice. When the USPTO processes the reply to the Notice, the USPTO will generate another Filing Receipt incorporating the requested corrections**

Applicant(s)

Francisco M. Gutierrez, League City, TX;
Richard D. Atton, Houston, TX;

Assignment For Published Patent Application

Dresser, Inc., Addision, TX

Power of Attorney: The patent practitioners associated with Customer Number 26231

Domestic Priority data as claimed by applicant

This appln claims benefit of 61/184,890 06/08/2009

Foreign Applications

If Required, Foreign Filing License Granted: 06/15/2010

The country code and number of your priority application, to be used for filing abroad under the Paris Convention, is **US 12/794,898**

Projected Publication Date: To Be Determined - pending completion of Corrected Papers

Non-Publication Request: No

Early Publication Request: No

SitePro, Ex. 2006
TankLogix v. SitePro, IPR2025-00651

Title

Chemical Injection System

Preliminary Class

318

PROTECTING YOUR INVENTION OUTSIDE THE UNITED STATES

Since the rights granted by a U.S. patent extend only throughout the territory of the United States and have no effect in a foreign country, an inventor who wishes patent protection in another country must apply for a patent in a specific country or in regional patent offices. Applicants may wish to consider the filing of an international application under the Patent Cooperation Treaty (PCT). An international (PCT) application generally has the same effect as a regular national patent application in each PCT-member country. The PCT process **simplifies** the filing of patent applications on the same invention in member countries, but **does not result** in a grant of "an international patent" and does not eliminate the need of applicants to file additional documents and fees in countries where patent protection is desired.

Almost every country has its own patent law, and a person desiring a patent in a particular country must make an application for patent in that country in accordance with its particular laws. Since the laws of many countries differ in various respects from the patent law of the United States, applicants are advised to seek guidance from specific foreign countries to ensure that patent rights are not lost prematurely.

Applicants also are advised that in the case of inventions made in the United States, the Director of the USPTO must issue a license before applicants can apply for a patent in a foreign country. The filing of a U.S. patent application serves as a request for a foreign filing license. The application's filing receipt contains further information and guidance as to the status of applicant's license for foreign filing.

Applicants may wish to consult the USPTO booklet, "General Information Concerning Patents" (specifically, the section entitled "Treaties and Foreign Patents") for more information on timeframes and deadlines for filing foreign patent applications. The guide is available either by contacting the USPTO Contact Center at 800-786-9199, or it can be viewed on the USPTO website at http://www.uspto.gov/web/offices/pac/doc/general/index.html.

For information on preventing theft of your intellectual property (patents, trademarks and copyrights), you may wish to consult the U.S. Government website, http://www.stopfakes.gov. Part of a Department of Commerce initiative, this website includes self-help "toolkits" giving innovators guidance on how to protect intellectual property in specific countries such as China, Korea and Mexico. For questions regarding patent enforcement issues, applicants may call the U.S. Government hotline at 1-866-999-HALT (1-866-999-4158).

LICENSE FOR FOREIGN FILING UNDER

Title 35, United States Code, Section 184

Title 37, Code of Federal Regulations, 5.11 & 5.15

GRANTED

The applicant has been granted a license under 35 U.S.C. 184, if the phrase "IF REQUIRED, FOREIGN FILING LICENSE GRANTED" followed by a date appears on this form. Such licenses are issued in all applications where the conditions for issuance of a license have been met, regardless of whether or not a license may be required as

set forth in 37 CFR 5.15. The scope and limitations of this license are set forth in 37 CFR 5.15(a) unless an earlier license has been issued under 37 CFR 5.15(b). The license is subject to revocation upon written notification. The date indicated is the effective date of the license, unless an earlier license of similar scope has been granted under 37 CFR 5.13 or 5.14.

This license is to be retained by the licensee and may be used at any time on or after the effective date thereof unless it is revoked. This license is automatically transferred to any related applications(s) filed under 37 CFR 1.53(d). This license is not retroactive.

The grant of a license does not in any way lessen the responsibility of a licensee for the security of the subject matter as imposed by any Government contract or the provisions of existing laws relating to espionage and the national security or the export of technical data. Licensees should apprise themselves of current regulations especially with respect to certain countries, of other agencies, particularly the Office of Defense Trade Controls, Department of State (with respect to Arms, Munitions and Implements of War (22 CFR 121-128)); the Bureau of Industry and Security, Department of Commerce (15 CFR parts 730-774); the Office of Foreign AssetsControl, Department of Treasury (31 CFR Parts 500+) and the Department of Energy.

NOT GRANTED

No license under 35 U.S.C. 184 has been granted at this time, if the phrase "IF REQUIRED, FOREIGN FILING LICENSE GRANTED" DOES NOT appear on this form. Applicant may still petition for a license under 37 CFR 5.12, if a license is desired before the expiration of 6 months from the filing date of the application. If 6 months has lapsed from the filing date of this application and the licensee has not received any indication of a secrecy order under 35 U.S.C. 181, the licensee may foreign file the application pursuant to 37 CFR 5.15(b).

UNITED STATES PATENT AND TRADEMARK OFFICE

UNITED STATES DEPARTMENT OF COMMERCE
United States Patent and Trademark Office
Address: COMMISSIONER FOR PATENTS
P.O. Box 1450
Alexandria, Virginia 22313-1450
www.uspto.gov

APPLICATION NUMBER	FILING OR 371(C) DATE	FIRST NAMED APPLICANT	ATTY. DOCKET NO./TITLE
12/794,898	06/07/2010	Francisco M. Gutierrez	15825-0243001

CONFIRMATION NO. 9904

FORMALITIES LETTER

26231
FISH & RICHARDSON P.C.
P.O. BOX 1022
MINNEAPOLIS, MN 55440-1022

OC000000042125408

Date Mailed: 06/18/2010

NOTICE TO FILE CORRECTED APPLICATION PAPERS

Filing Date Granted

An application number and filing date have been accorded to this application. The application is informal since it does not comply with the regulations for the reason(s) indicated below. Applicant is given TWO MONTHS from the date of this Notice within which to correct the informalities indicated below. Extensions of time may be obtained by filing a petition accompanied by the extension fee under the provisions of 37 CFR 1.136(a).

The required item(s) identified below must be timely submitted to avoid abandonment:

- Replacement drawings in compliance with 37 CFR 1.84 and 37 CFR 1.121(d) are required. The drawings submitted are not acceptable because:
  - The drawings submitted to the Office are not electronically reproducible because portions of figures 3,4A-4D are missing and/or blurry.
  - The drawings are not in compliance with 37 CFR 1.84 because figures 3 contain figure or view numbers that have incorrect orientation. Reference characters, sheet numbers, and view numbers must be oriented in the same direction as the view. See 37 CFR 1.84(p)(1).

Applicant is cautioned that correction of the above items may cause the specification and drawings page count to exceed 100 pages. If the specification and drawings exceed 100 pages, applicant will need to submit the required application size fee.

SitePro, Ex. 2006
TankLogix v. SitePro, IPR2025-00651

Replies should be mailed to:

Mail Stop Missing Parts
Commissioner for Patents
P.O. Box 1450
Alexandria VA 22313-1450

Registered users of EFS-Web may alternatively submit their reply to this notice via EFS-Web.
https://sportal.uspto.gov/authenticate/AuthenticateUserLocalEPF.html

For more information about EFS-Web please call the USPTO Electronic Business Center at **1-866-217-9197** or visit our website at http://www.uspto.gov/ebc.

If you are not using EFS-Web to submit your reply, you must include a copy of this notice.

/tketsela/

Office of Data Management, Application Assistance Unit (571) 272-4000, or (571) 272-4200, or 1-888-786-0101

IN THE UNITED STATES PATENT AND TRADEMARK OFFICE

Applicant	: Francisco M. Gutierrez et al.	Art Unit	: 2837
Serial No.	: 12/794,898	Examiner	: Unknown
Filed	: June 7, 2010	Conf. No.	: 9904
Title	: CHEMICAL INJECTION SYSTEM		

Commissioner for Patents
P.O. Box 1450
Alexandria, VA 22313-1450

RESPONSE TO NOTICE TO FILE CORRECTED APPLICATION PAPERS

Responsive to the Notice to File Corrected Application Papers mailed June 18, 2010, applicant as a large entity submits herewith the following:

☒ Replacement drawings (5 sheets) in compliance with 37 CFR §1.84. No new matter has been added.

It is understood that this perfects the application and no additional papers or filing fees are required. No fees are believed to be due. If this is incorrect, however, the Commissioner is authorized to apply any charges or credits to Deposit Account No. 06-1050, referencing the attorney docket number shown above.

Respectfully submitted,

Date: June 22, 2010

/Matthew K. Wernli/
Matthew K. Wernli
Reg. No. 63,173

Fish & Richardson P.C.
PO Box 1022
Minneapolis, MN 55440-1022
Telephone: (512) 472-5070
Facsimile: (877) 769-7945

11093858.doc

CERTIFICATE OF MAILING BY EFS-WEB FILING

I hereby certify that this paper was filed with the Patent and Trademark Office using the EFS-WEB system on this date: June 22, 2010

SitePro, Ex. 2006
TankLogix v. SitePro, IPR2025-00651

REPLACEMENT
SHEET

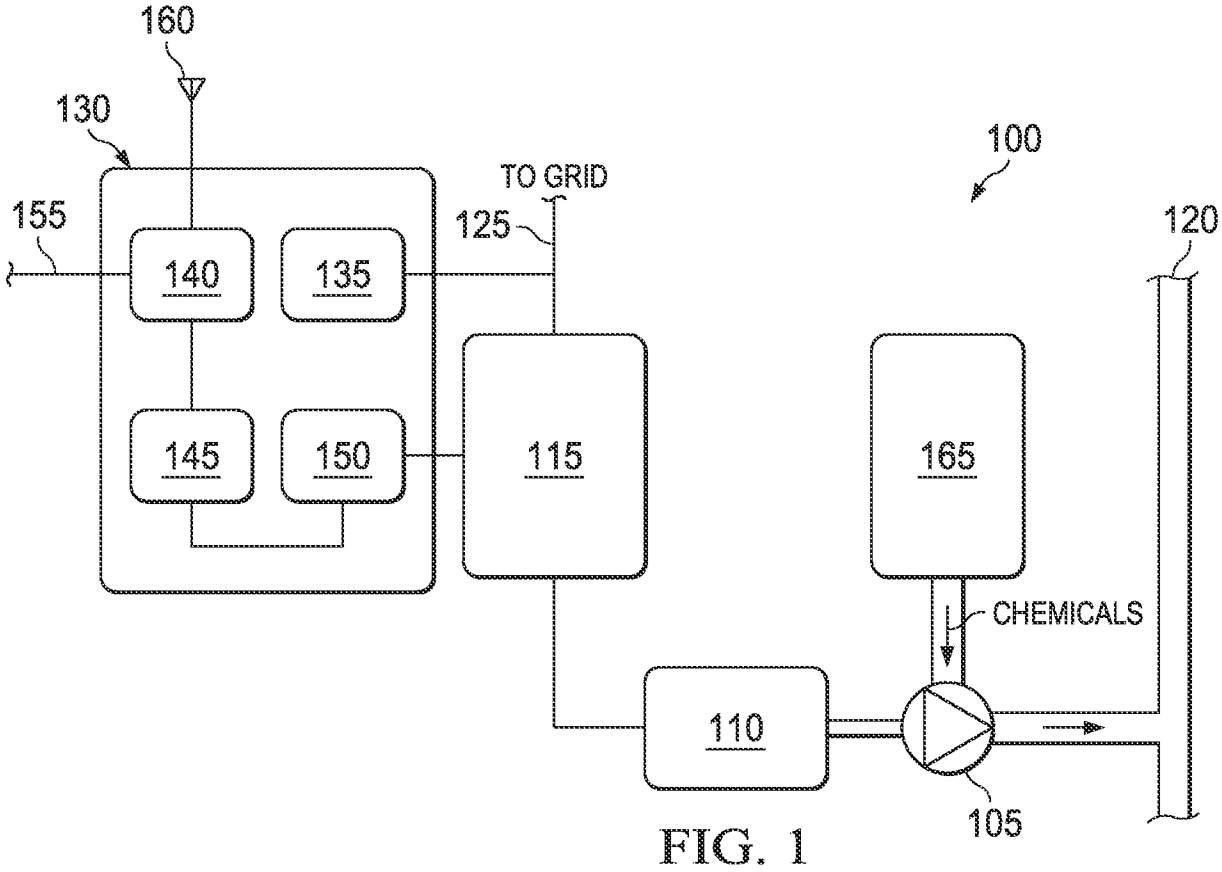

FIG. 1

REPLACEMENT
SHEET

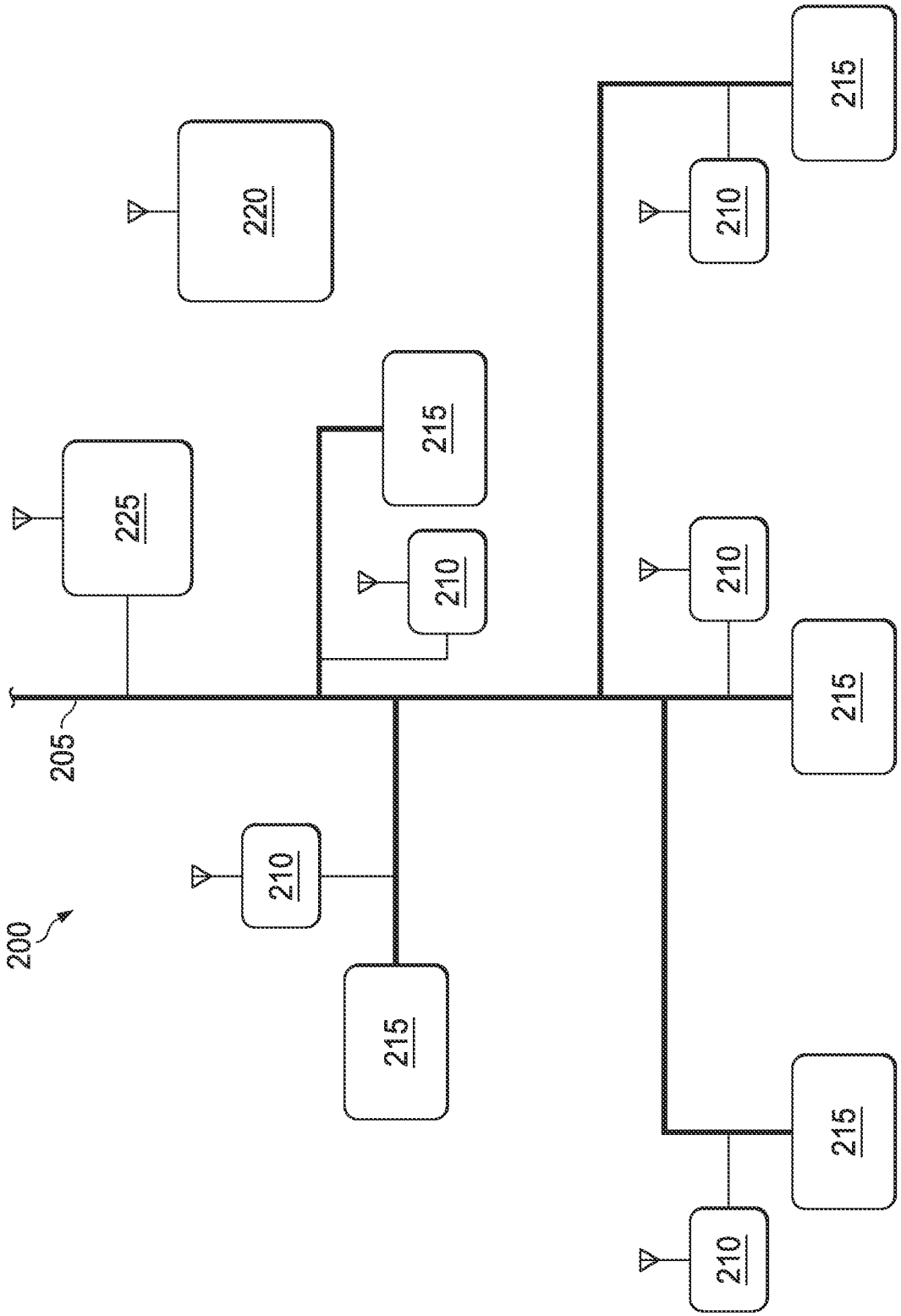

FIG. 2

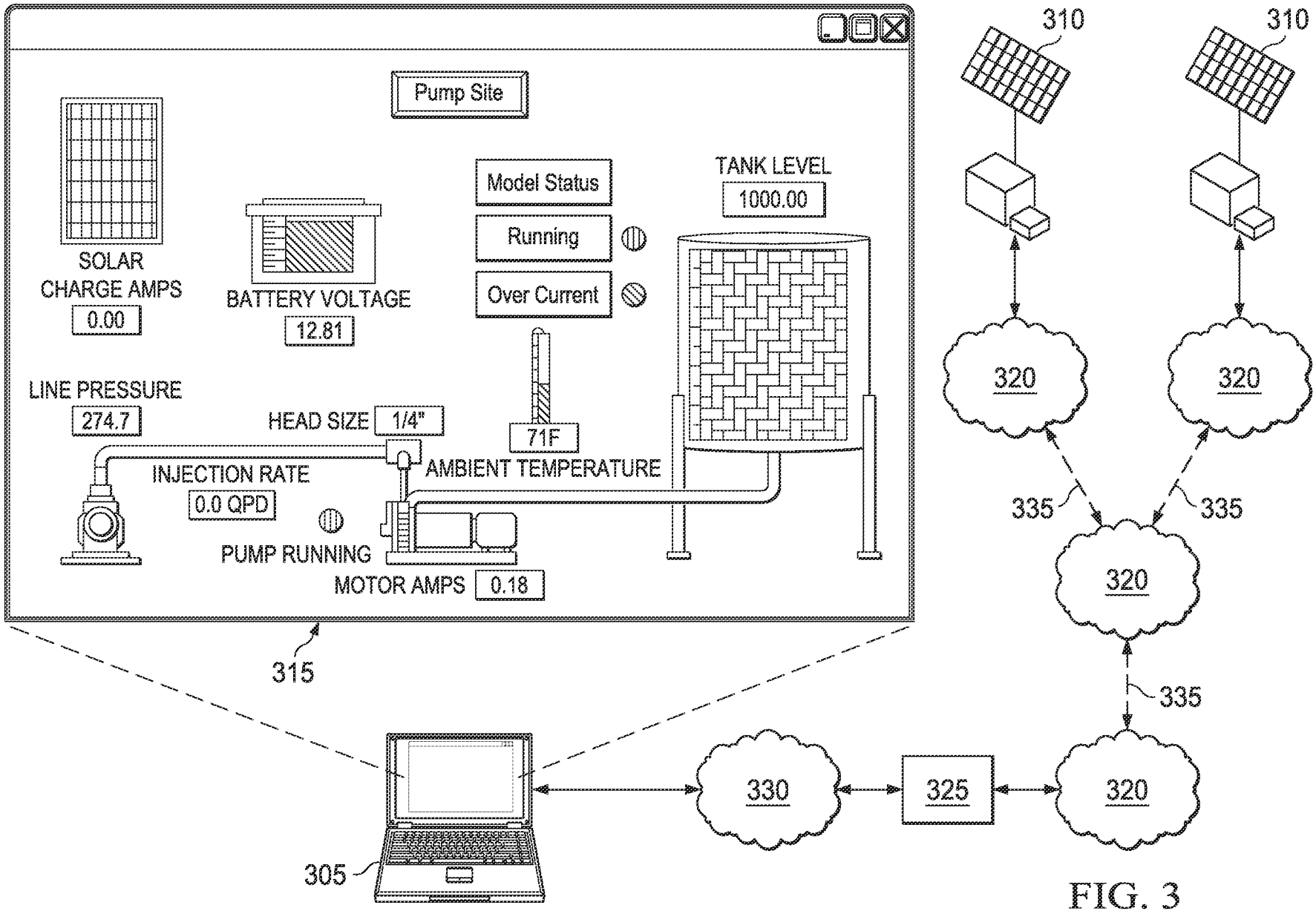
Pump Site
SOLAR
CHARGE AMPS
0.00
BATTERY VOLTAGE
12.81
Model Status
Running
Over Current
TANK LEVEL
1000.00
LINE PRESSURE
274.7
HEAD SIZE
1/4"
71F
AMBIENT TEMPERATURE
INJECTION RATE
0.0 QPD
PUMP RUNNING
MOTOR AMPS
0.18
315
305
330
325
320
335
310

FIG. 3

REPLACEMENT SHEET

FIG. 4A

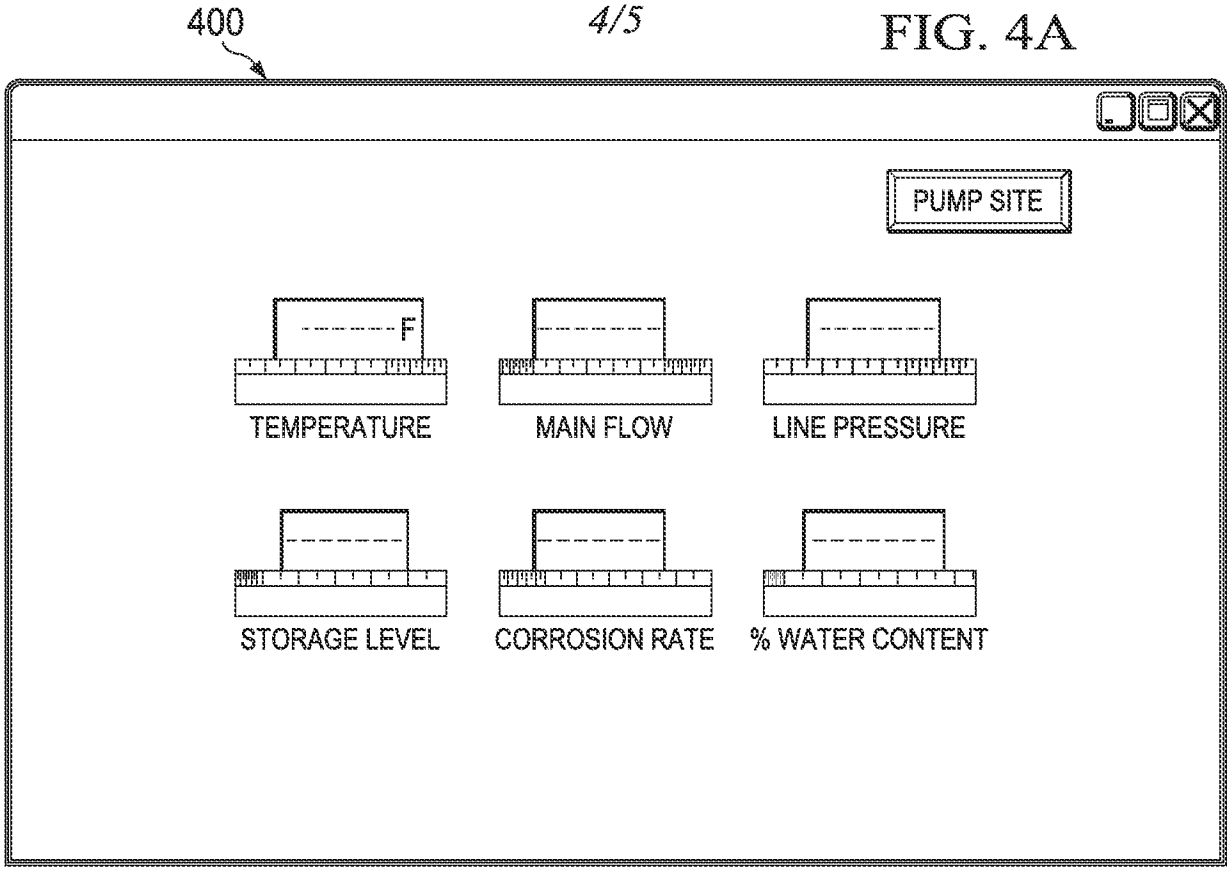

FIG. 4B

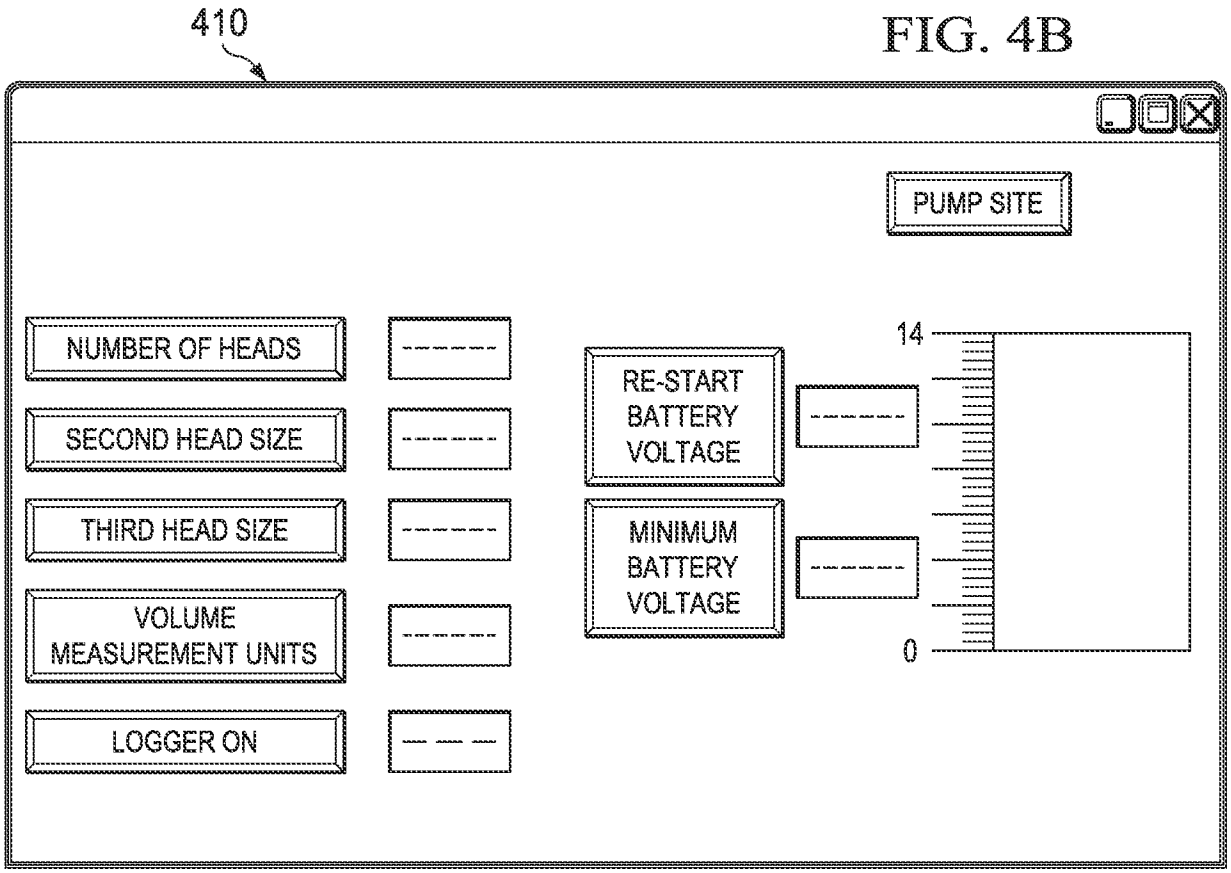

SitePro, Ex. 2006
TankLogix v. SitePro, IPR2025-00651

REPLACEMENT SHEET

420

FIG. 4C

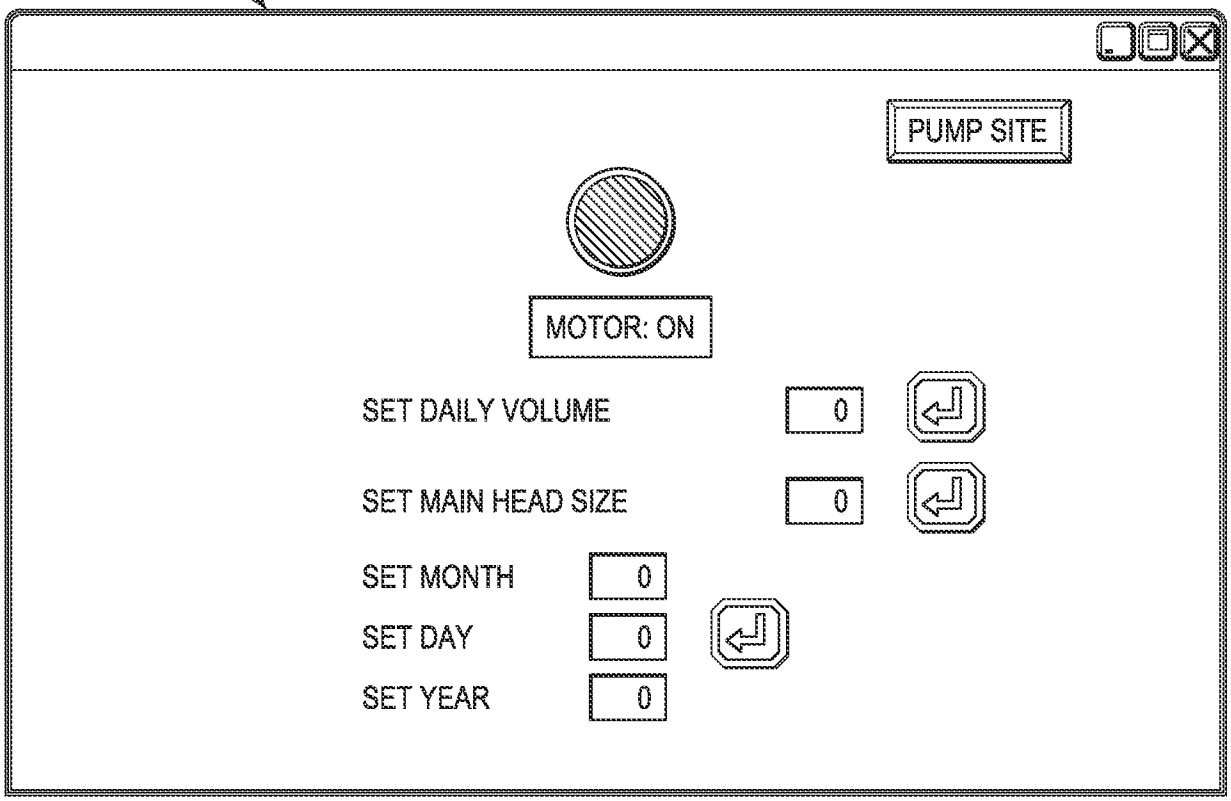

430

FIG. 4D

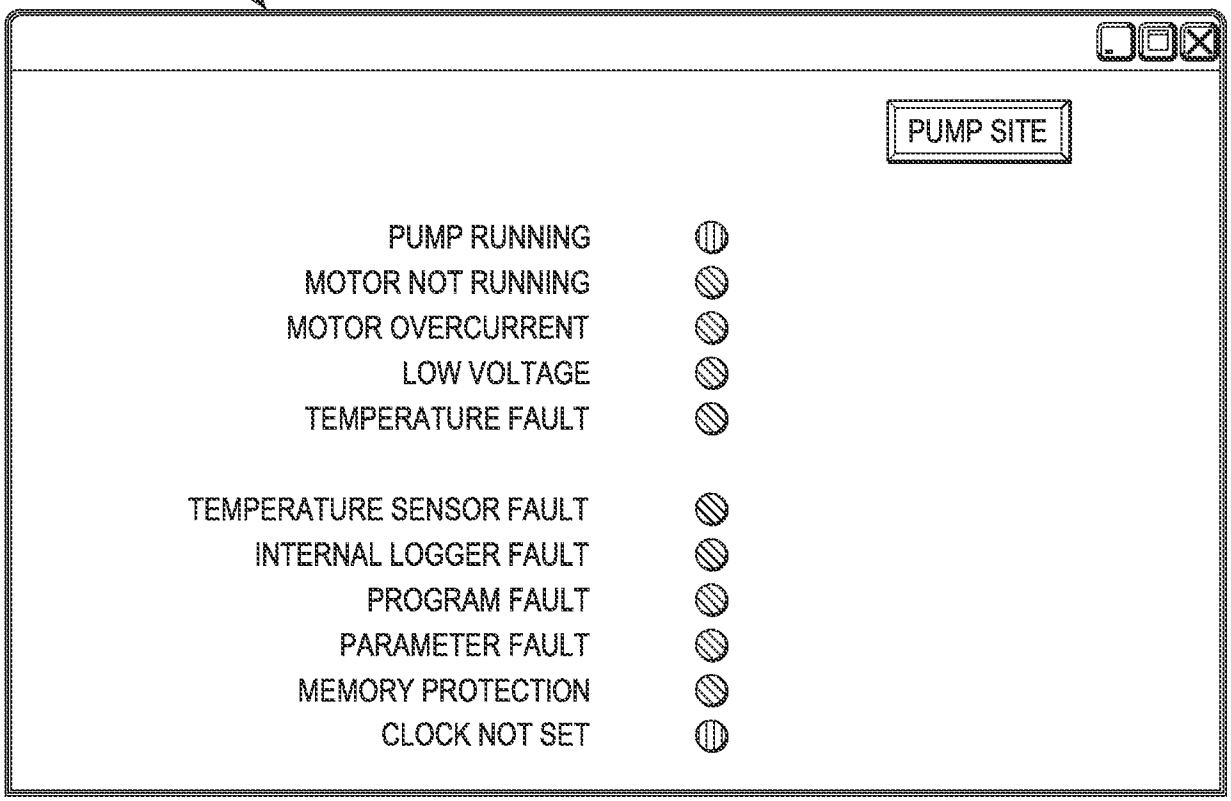

SitePro, Ex. 2006
TankLogix v. SitePro, IPR2025-00651

Electronic Acknowledgement Receipt

EFS ID:	7863884
Application Number:	12794898
International Application Number:	
Confirmation Number:	9904
Title of Invention:	Chemical Injection System
First Named Inventor/Applicant Name:	Francisco M. Gutierrez
Customer Number:	26231
Filer:	Matthew K. Wernli/Karen Vertz
Filer Authorized By:	Matthew K. Wernli
Attorney Docket Number:	15825-0243001
Receipt Date:	22-JUN-2010
Filing Date:	07-JUN-2010
Time Stamp:	12:49:26
Application Type:	Utility under 35 USC 111(a)

Payment information:

Submitted with Payment	no

File Listing:

Document Number	Document Description	File Name	File Size(Bytes)/ Message Digest	Multi Part /.zip	Pages (if appl.)
1	Applicant Response to Pre-Exam Formalities Notice	15825-0243001_ResponsetoCorrectAppPapers.pdf	20772 2f9191c5aede489bf57719835f5e52dc82ed2e87	no	1

Warnings:

Information:

SitePro, Ex. 2006
TankLogix v. SitePro, IPR2025-00651

2	Drawings-only black and white line drawings	15825-0243001_ReplacementDrawings.pdf	114759 be3b7cf1ba67e06969f8e4f21bddab78756e8cbf	no	5
Warnings:					
Information:					
			Total Files Size (in bytes):	135531	

This Acknowledgement Receipt evidences receipt on the noted date by the USPTO of the indicated documents, characterized by the applicant, and including page counts, where applicable. It serves as evidence of receipt similar to a Post Card, as described in MPEP 503.

<u>New Applications Under 35 U.S.C. 111</u>
If a new application is being filed and the application includes the necessary components for a filing date (see 37 CFR 1.53(b)-(d) and MPEP 506), a Filing Receipt (37 CFR 1.54) will be issued in due course and the date shown on this Acknowledgement Receipt will establish the filing date of the application.

<u>National Stage of an International Application under 35 U.S.C. 371</u>
If a timely submission to enter the national stage of an international application is compliant with the conditions of 35 U.S.C. 371 and other applicable requirements a Form PCT/DO/EO/903 indicating acceptance of the application as a national stage submission under 35 U.S.C. 371 will be issued in addition to the Filing Receipt, in due course.

<u>New International Application Filed with the USPTO as a Receiving Office</u>
If a new international application is being filed and the international application includes the necessary components for an international filing date (see PCT Article 11 and MPEP 1810), a Notification of the International Application Number and of the International Filing Date (Form PCT/RO/105) will be issued in due course, subject to prescriptions concerning national security, and the date shown on this Acknowledgement Receipt will establish the international filing date of the application.

SitePro, Ex. 2006
TankLogix v. SitePro, IPR2025-00651

UNITED STATES PATENT AND TRADEMARK OFFICE

UNITED STATES DEPARTMENT OF COMMERCE
United States Patent and Trademark Office
Address: COMMISSIONER FOR PATENTS
P.O. Box 1450
Alexandria, Virginia 22313-1450
www.uspto.gov

APPLICATION NUMBER	FILING or 371(c) DATE	GRP ART UNIT	FIL FEE REC'D	ATTY.DOCKET.NO	TOT CLAIMS	IND CLAIMS
12/794,898	06/07/2010	2837	1350	15825-0243001 / TEXSTEAM	25	3

CONFIRMATION NO. 9904

UPDATED FILING RECEIPT

26231
FISH & RICHARDSON P.C.
P.O. BOX 1022
MINNEAPOLIS, MN 55440-1022

OC000000042321008

Date Mailed: 06/30/2010

Receipt is acknowledged of this non-provisional patent application. The application will be taken up for examination in due course. Applicant will be notified as to the results of the examination. Any correspondence concerning the application must include the following identification information: the U.S. APPLICATION NUMBER, FILING DATE, NAME OF APPLICANT, and TITLE OF INVENTION. Fees transmitted by check or draft are subject to collection. Please verify the accuracy of the data presented on this receipt. **If an error is noted on this Filing Receipt, please submit a written request for a Filing Receipt Correction. Please provide a copy of this Filing Receipt with the changes noted thereon. If you received a "Notice to File Missing Parts" for this application, please submit any corrections to this Filing Receipt with your reply to the Notice. When the USPTO processes the reply to the Notice, the USPTO will generate another Filing Receipt incorporating the requested corrections**

Applicant(s)

Francisco M. Gutierrez, League City, TX;
Richard D. Atton, Houston, TX;

Assignment For Published Patent Application

Dresser, Inc., Addision, TX

Power of Attorney: The patent practitioners associated with Customer Number 26231

Domestic Priority data as claimed by applicant

This appln claims benefit of 61/184,890 06/08/2009

Foreign Applications

If Required, Foreign Filing License Granted: 06/15/2010

The country code and number of your priority application, to be used for filing abroad under the Paris Convention, is **US 12/794,898**

Projected Publication Date: 12/09/2010

Non-Publication Request: No

Early Publication Request: No

Title

Chemical Injection System

Preliminary Class

318

PROTECTING YOUR INVENTION OUTSIDE THE UNITED STATES

Since the rights granted by a U.S. patent extend only throughout the territory of the United States and have no effect in a foreign country, an inventor who wishes patent protection in another country must apply for a patent in a specific country or in regional patent offices. Applicants may wish to consider the filing of an international application under the Patent Cooperation Treaty (PCT). An international (PCT) application generally has the same effect as a regular national patent application in each PCT-member country. The PCT process **simplifies** the filing of patent applications on the same invention in member countries, but **does not result** in a grant of "an international patent" and does not eliminate the need of applicants to file additional documents and fees in countries where patent protection is desired.

Almost every country has its own patent law, and a person desiring a patent in a particular country must make an application for patent in that country in accordance with its particular laws. Since the laws of many countries differ in various respects from the patent law of the United States, applicants are advised to seek guidance from specific foreign countries to ensure that patent rights are not lost prematurely.

Applicants also are advised that in the case of inventions made in the United States, the Director of the USPTO must issue a license before applicants can apply for a patent in a foreign country. The filing of a U.S. patent application serves as a request for a foreign filing license. The application's filing receipt contains further information and guidance as to the status of applicant's license for foreign filing.

Applicants may wish to consult the USPTO booklet, "General Information Concerning Patents" (specifically, the section entitled "Treaties and Foreign Patents") for more information on timeframes and deadlines for filing foreign patent applications. The guide is available either by contacting the USPTO Contact Center at 800-786-9199, or it can be viewed on the USPTO website at http://www.uspto.gov/web/offices/pac/doc/general/index.html.

For information on preventing theft of your intellectual property (patents, trademarks and copyrights), you may wish to consult the U.S. Government website, http://www.stopfakes.gov. Part of a Department of Commerce initiative, this website includes self-help "toolkits" giving innovators guidance on how to protect intellectual property in specific countries such as China, Korea and Mexico. For questions regarding patent enforcement issues, applicants may call the U.S. Government hotline at 1-866-999-HALT (1-866-999-4158).

LICENSE FOR FOREIGN FILING UNDER

Title 35, United States Code, Section 184

Title 37, Code of Federal Regulations, 5.11 & 5.15

GRANTED

The applicant has been granted a license under 35 U.S.C. 184, if the phrase "IF REQUIRED, FOREIGN FILING LICENSE GRANTED" followed by a date appears on this form. Such licenses are issued in all applications where the conditions for issuance of a license have been met, regardless of whether or not a license may be required as

set forth in 37 CFR 5.15. The scope and limitations of this license are set forth in 37 CFR 5.15(a) unless an earlier license has been issued under 37 CFR 5.15(b). The license is subject to revocation upon written notification. The date indicated is the effective date of the license, unless an earlier license of similar scope has been granted under 37 CFR 5.13 or 5.14.

This license is to be retained by the licensee and may be used at any time on or after the effective date thereof unless it is revoked. This license is automatically transferred to any related applications(s) filed under 37 CFR 1.53(d). This license is not retroactive.

The grant of a license does not in any way lessen the responsibility of a licensee for the security of the subject matter as imposed by any Government contract or the provisions of existing laws relating to espionage and the national security or the export of technical data. Licensees should apprise themselves of current regulations especially with respect to certain countries, of other agencies, particularly the Office of Defense Trade Controls, Department of State (with respect to Arms, Munitions and Implements of War (22 CFR 121-128)); the Bureau of Industry and Security, Department of Commerce (15 CFR parts 730-774); the Office of Foreign AssetsControl, Department of Treasury (31 CFR Parts 500+) and the Department of Energy.

NOT GRANTED

No license under 35 U.S.C. 184 has been granted at this time, if the phrase "IF REQUIRED, FOREIGN FILING LICENSE GRANTED" DOES NOT appear on this form. Applicant may still petition for a license under 37 CFR 5.12, if a license is desired before the expiration of 6 months from the filing date of the application. If 6 months has lapsed from the filing date of this application and the licensee has not received any indication of a secrecy order under 35 U.S.C. 181, the licensee may foreign file the application pursuant to 37 CFR 5.15(b).

UNITED STATES PATENT AND TRADEMARK OFFICE

UNITED STATES DEPARTMENT OF COMMERCE
United States Patent and Trademark Office
Address: COMMISSIONER FOR PATENTS
P.O. Box 1450
Alexandria, Virginia 22313-1450
www.uspto.gov

APPLICATION NUMBER	FILING OR 371(C) DATE	FIRST NAMED APPLICANT	ATTY. DOCKET NO./TITLE
12/794,898	06/07/2010	Francisco M. Gutierrez	15825-0243001 / TEXSTEAM

CONFIRMATION NO. 9904

PUBLICATION NOTICE

26231
FISH & RICHARDSON P.C. (DA)
P.O. BOX 1022
MINNEAPOLIS, MN 55440-1022

OC000000044877920

Title: Chemical Injection System

Publication No.US-2010-0312401-A1
Publication Date:12/09/2010

NOTICE OF PUBLICATION OF APPLICATION

The above-identified application will be electronically published as a patent application publication pursuant to 37 CFR 1.211, et seq. The patent application publication number and publication date are set forth above.

The publication may be accessed through the USPTO's publically available Searchable Databases via the Internet at www.uspto.gov. The direct link to access the publication is currently http://www.uspto.gov/patft/.

The publication process established by the Office does not provide for mailing a copy of the publication to applicant. A copy of the publication may be obtained from the Office upon payment of the appropriate fee set forth in 37 CFR 1.19(a)(1). Orders for copies of patent application publications are handled by the USPTO's Office of Public Records. The Office of Public Records can be reached by telephone at (703) 308-9726 or (800) 972-6382, by facsimile at (703) 305-8759, by mail addressed to the United States Patent and Trademark Office, Office of Public Records, Alexandria, VA 22313-1450 or via the Internet.

In addition, information on the status of the application, including the mailing date of Office actions and the dates of receipt of correspondence filed in the Office, may also be accessed via the Internet through the Patent Electronic Business Center at www.uspto.gov using the public side of the Patent Application Information and Retrieval (PAIR) system. The direct link to access this status information is currently http://pair.uspto.gov/. Prior to publication, such status information is confidential and may only be obtained by applicant using the private side of PAIR.

Further assistance in electronically accessing the publication, or about PAIR, is available by calling the Patent Electronic Business Center at 1-866-217-9197.

Office of Data Managment, Application Assistance Unit (571) 272-4000, or (571) 272-4200, or 1-888-786-0101

SitePro, Ex. 2006
TankLogix v. SitePro, IPR2025-00651

PTO/SB/80 (11-08)
Approved for use through 11/30/2011. OMB 0651-0035
U.S. Patent and Trademark Office; U.S. DEPARTMENT OF COMMERCE
Under the Paperwork Reduction Act of 1995, no persons are required to respond to a collection of information unless it displays a valid OMB control number.

POWER OF ATTORNEY TO PROSECUTE APPLICATIONS BEFORE THE USPTO

I hereby revoke all previous powers of attorney given in the application identified in the attached statement under 37 CFR 3.73(b).

I hereby appoint:

☑ Practitioners associated with the Customer Number: 16025

OR

☐ Practitioner(s) named below (if more than ten patent practitioners are to be named, then a customer number must be used):

Name	Registration Number	Name	Registration Number

as attorney(s) or agent(s) to represent the undersigned before the United States Patent and Trademark Office (USPTO) in connection with any and all patent applications assigned only to the undersigned according to the USPTO assignment records or assignment documents attached to this form in accordance with 37 CFR 3.73(b).

Please change the correspondence address for the application identified in the attached statement under 37 CFR 3.73(b) to:

☑ The address associated with Customer Number: 16025

OR

☐ Firm or Individual Name			
Address			
City		State	Zip
Country			
Telephone		Email	

Assignee Name and Address:

Dresser, Inc.
15455 Dallas Parkway
Addison, TX 75001

A copy of this form, together with a statement under 37 CFR 3.73(b) (Form PTO/SB/96 or equivalent) is required to be filed in each application in which this form is used. The statement under 37 CFR 3.73(b) may be completed by one of the practitioners appointed in this form if the appointed practitioner is authorized to act on behalf of the assignee, and must identify the application in which this Power of Attorney is to be filed.

SIGNATURE of Assignee of Record

The individual whose signature and title is supplied below is authorized to act on behalf of the assignee

Signature	G. Harvey Dunn III	Date	8/4/2011
Name	G. Harvey Dunn III	Telephone	972-361-9889
Title	Authorized Official		

This collection of information is required by 37 CFR 1.31, 1.32 and 1.33. The information is required to obtain or retain a benefit by the public which is to file (and by the USPTO to process) an application. Confidentiality is governed by 35 U.S.C. 122 and 37 CFR 1.11 and 1.14. This collection is estimated to take 3 minutes to complete, including gathering, preparing, and submitting the completed application form to the USPTO. Time will vary depending upon the individual case. Any comments on the amount of time you require to complete this form and/or suggestions for reducing this burden, should be sent to the Chief Information Officer, U.S. Patent and Trademark Office, U.S. Department of Commerce, P.O. Box 1450, Alexandria, VA 22313-1450. DO NOT SEND FEES OR COMPLETED FORMS TO THIS ADDRESS. **SEND TO: Commissioner for Patents, P.O. Box 1450, Alexandria, VA 22313-1450.**

If you need assistance in completing the form, call 1-800-PTO-9199 and select option 2.

SitePro, Ex. 2006
TankLogix v. SitePro, IPR2025-00651

Electronic Acknowledgement Receipt

EFS ID:	10683606
Application Number:	12794898
International Application Number:	
Confirmation Number:	9904
Title of Invention:	Chemical Injection System
First Named Inventor/Applicant Name:	Francisco M. Gutierrez
Customer Number:	26231
Filer:	Eduardo M. Carreras/TISHA HARDRICK
Filer Authorized By:	Eduardo M. Carreras
Attorney Docket Number:	15825-0243001 / TEXSTEAM
Receipt Date:	08-AUG-2011
Filing Date:	07-JUN-2010
Time Stamp:	11:25:38
Application Type:	Utility under 35 USC 111(a)

Payment information:

Submitted with Payment	no

File Listing:

Document Number	Document Description	File Name	File Size(Bytes)/ Message Digest	Multi Part /.zip	Pages (if appl.)
1	Power of Attorney	GEDR0005_POA.PDF	139694 5e21b9dba65b50d004c005614130b494d6b57af6	no	1

Warnings:

Information:

SitePro, Ex. 2006
TankLogix v. SitePro, IPR2025-00651

Total Files Size (in bytes):	139694

This Acknowledgement Receipt evidences receipt on the noted date by the USPTO of the indicated documents, characterized by the applicant, and including page counts, where applicable. It serves as evidence of receipt similar to a Post Card, as described in MPEP 503.

New Applications Under 35 U.S.C. 111
If a new application is being filed and the application includes the necessary components for a filing date (see 37 CFR 1.53(b)-(d) and MPEP 506), a Filing Receipt (37 CFR 1.54) will be issued in due course and the date shown on this Acknowledgement Receipt will establish the filing date of the application.

National Stage of an International Application under 35 U.S.C. 371
If a timely submission to enter the national stage of an international application is compliant with the conditions of 35 U.S.C. 371 and other applicable requirements a Form PCT/DO/EO/903 indicating acceptance of the application as a national stage submission under 35 U.S.C. 371 will be issued in addition to the Filing Receipt, in due course.

New International Application Filed with the USPTO as a Receiving Office
If a new international application is being filed and the international application includes the necessary components for an international filing date (see PCT Article 11 and MPEP 1810), a Notification of the International Application Number and of the International Filing Date (Form PCT/RO/105) will be issued in due course, subject to prescriptions concerning national security, and the date shown on this Acknowledgement Receipt will establish the international filing date of the application.

SitePro, Ex. 2006
TankLogix v. SitePro, IPR2025-00651

Under the Paperwork Reduction Act of 1995, no persons are required to respond to a collection of information unless it displays a valid OMB control number.

STATEMENT UNDER 37 CFR 3.73(b)

Applicant/Patent Owner: Francisco M. Gutierrez and Richard D. Atton

Application No./Patent No.: 12/794,898 Filed/Issue Date: 06/07/10

Titled: Chemical Injection System

Dresser, Inc. , a corporation
(Name of Assignee) (Type of Assignee, e.g., corporation, partnership, university, government agency, etc.

states that it is:

1. [x] the assignee of the entire right, title, and interest in;

2. [ ] an assignee of less than the entire right, title, and interest in
(The extent (by percentage) of its ownership interest is _____ %); or

3. [ ] the assignee of an undivided interest in the entirety of (a complete assignment from one of the joint inventors was made)

the patent application/patent identified above, by virtue of either:

A. [x] An assignment from the inventor(s) of the patent application/patent identified above. The assignment was recorded in the United States Patent and Trademark Office at Reel 025775, Frame 0610, or for which a copy therefore is attached.

OR

B. [ ] A chain of title from the inventor(s), of the patent application/patent identified above, to the current assignee as follows:

1. From: _____ To: _____
The document was recorded in the United States Patent and Trademark Office at
Reel _____, Frame_____, or for which a copy thereof is attached.

2. From: _____ To: _____
The document was recorded in the United States Patent and Trademark Office at
Reel _____, Frame_____, or for which a copy thereof is attached.

3. From: _____ To: _____
The document was recorded in the United States Patent and Trademark Office at
Reel _____, Frame_____, or for which a copy thereof is attached.

[ ] Additional documents in the chain of title are listed on a supplemental sheet(s).

[ ] As required by 37 CFR 3.73(b)(1)(i), the documentary evidence of the chain of title from the original owner to the assignee was, or concurrently is being, submitted for recordation pursuant to 37 CFR 3.11.

[NOTE: A separate copy (*i.e.*, a true copy of the original assignment document(s)) must be submitted to Assignment Division in accordance with 37 CFR Part 3, to record the assignment in the records of the USPTO. See MPEP 302.08]

The undersigned (whose title is supplied below) is authorized to act on behalf of the assignee.

/Eduardo M. Carreras/	August 8, 2011
Signature	Date
Eduardo M. Carreras	Registered Atty./28,197
Printed or Typed Name	Title

This collection of information is required by 37 CFR 3.73(b). The information is required to obtain or retain a benefit by the public which is to file (and by the USPTO to process) an application. Confidentiality is governed by 35 U.S.C. 122 and 37 CFR 1.11 and 1.14. This collection is estimated to take 12 minutes to complete, including gathering, preparing, and submitting the completed application form to the USPTO. Time will vary depending upon the individual case. Any comments on the amount of time you require to complete this form and/or suggestions for reducing this burden, should be sent to the Chief Information Officer, U.S. Patent and Trademark Office, U.S. Department of Commerce, P.O. Box 1450, Alexandria, VA 22313-1450. DO NOT SEND FEES OR COMPLETED FORMS TO THIS ADDRESS. **SEND TO: Commissioner for Patents, P.O. Box 1450, Alexandria, VA 22313-1450.**

Privacy Act Statement

The **Privacy Act of 1974 (P.L. 93-579)** requires that you be given certain information in connection with your submission of the attached form related to a patent application or patent. Accordingly, pursuant to the requirements of the Act, please be advised that: (1) the general authority for the collection of this information is 35 U.S.C. 2(b)(2); (2) furnishing of the information solicited is voluntary; and (3) the principal purpose for which the information is used by the U.S. Patent and Trademark Office is to process and/or examine your submission related to a patent application or patent. If you do not furnish the requested information, the U.S. Patent and Trademark Office may not be able to process and/or examine your submission, which may result in termination of proceedings or abandonment of the application or expiration of the patent.

The information provided by you in this form will be subject to the following routine uses:

1. The information on this form will be treated confidentially to the extent allowed under the Freedom of Information Act (5 U.S.C. 552) and the Privacy Act (5 U.S.C 552a). Records from this system of records may be disclosed to the Department of Justice to determine whether disclosure of these records is required by the Freedom of Information Act.
2. A record from this system of records may be disclosed, as a routine use, in the course of presenting evidence to a court, magistrate, or administrative tribunal, including disclosures to opposing counsel in the course of settlement negotiations.
3. A record in this system of records may be disclosed, as a routine use, to a Member of Congress submitting a request involving an individual, to whom the record pertains, when the individual has requested assistance from the Member with respect to the subject matter of the record.
4. A record in this system of records may be disclosed, as a routine use, to a contractor of the Agency having need for the information in order to perform a contract. Recipients of information shall be required to comply with the requirements of the Privacy Act of 1974, as amended, pursuant to 5 U.S.C. 552a(m).
5. A record related to an International Application filed under the Patent Cooperation Treaty in this system of records may be disclosed, as a routine use, to the International Bureau of the World Intellectual Property Organization, pursuant to the Patent Cooperation Treaty.
6. A record in this system of records may be disclosed, as a routine use, to another federal agency for purposes of National Security review (35 U.S.C. 181) and for review pursuant to the Atomic Energy Act (42 U.S.C. 218(c)).
7. A record from this system of records may be disclosed, as a routine use, to the Administrator, General Services, or his/her designee, during an inspection of records conducted by GSA as part of that agency's responsibility to recommend improvements in records management practices and programs, under authority of 44 U.S.C. 2904 and 2906. Such disclosure shall be made in accordance with the GSA regulations governing inspection of records for this purpose, and any other relevant (*i.e.*, GSA or Commerce) directive. Such disclosure shall not be used to make determinations about individuals.
8. A record from this system of records may be disclosed, as a routine use, to the public after either publication of the application pursuant to 35 U.S.C. 122(b) or issuance of a patent pursuant to 35 U.S.C. 151. Further, a record may be disclosed, subject to the limitations of 37 CFR 1.14, as a routine use, to the public if the record was filed in an application which became abandoned or in which the proceedings were terminated and which application is referenced by either a published application, an application open to public inspection or an issued patent.
9. A record from this system of records may be disclosed, as a routine use, to a Federal, State, or local law enforcement agency, if the USPTO becomes aware of a violation or potential violation of law or regulation.

SitePro, Ex. 2006
TankLogix v. SitePro, IPR2025-00651

Electronic Acknowledgement Receipt

EFS ID:	10685878
Application Number:	12794898
International Application Number:	
Confirmation Number:	9904
Title of Invention:	Chemical Injection System
First Named Inventor/Applicant Name:	Francisco M. Gutierrez
Customer Number:	26231
Filer:	Eduardo M. Carreras/TISHA HARDRICK
Filer Authorized By:	Eduardo M. Carreras
Attorney Docket Number:	15825-0243001 / TEXSTEAM
Receipt Date:	08-AUG-2011
Filing Date:	07-JUN-2010
Time Stamp:	14:19:18
Application Type:	Utility under 35 USC 111(a)

Payment information:

Submitted with Payment	no

File Listing:

Document Number	Document Description	File Name	File Size(Bytes)/ Message Digest	Multi Part /.zip	Pages (if appl.)
1	Assignee showing of ownership per 37 CFR 3.73(b).	GEDR0005_373b.PDF	411405 a86bcc7e15eb1fbeb6dead5c2bd80410b0e727eb	no	2

Warnings:

Information:

SitePro, Ex. 2006
TankLogix v. SitePro, IPR2025-00651

Total Files Size (in bytes):	411405

This Acknowledgement Receipt evidences receipt on the noted date by the USPTO of the indicated documents, characterized by the applicant, and including page counts, where applicable. It serves as evidence of receipt similar to a Post Card, as described in MPEP 503.

New Applications Under 35 U.S.C. 111
If a new application is being filed and the application includes the necessary components for a filing date (see 37 CFR 1.53(b)-(d) and MPEP 506), a Filing Receipt (37 CFR 1.54) will be issued in due course and the date shown on this Acknowledgement Receipt will establish the filing date of the application.

National Stage of an International Application under 35 U.S.C. 371
If a timely submission to enter the national stage of an international application is compliant with the conditions of 35 U.S.C. 371 and other applicable requirements a Form PCT/DO/EO/903 indicating acceptance of the application as a national stage submission under 35 U.S.C. 371 will be issued in addition to the Filing Receipt, in due course.

New International Application Filed with the USPTO as a Receiving Office
If a new international application is being filed and the international application includes the necessary components for an international filing date (see PCT Article 11 and MPEP 1810), a Notification of the International Application Number and of the International Filing Date (Form PCT/RO/105) will be issued in due course, subject to prescriptions concerning national security, and the date shown on this Acknowledgement Receipt will establish the international filing date of the application.

SitePro, Ex. 2006
TankLogix v. SitePro, IPR2025-00651

UNITED STATES PATENT AND TRADEMARK OFFICE

UNITED STATES DEPARTMENT OF COMMERCE
United States Patent and Trademark Office
Address: COMMISSIONER FOR PATENTS
P.O. Box 1450
Alexandria, Virginia 22313-1450
www.uspto.gov

APPLICATION NUMBER	FILING OR 371(C) DATE	FIRST NAMED APPLICANT	ATTY. DOCKET NO./TITLE
12/794,898	06/07/2010	Francisco M. Gutierrez	15825-0243001 / TEXSTEAM

CONFIRMATION NO. 9904

POA ACCEPTANCE LETTER

16025
Woodcock Washburn LLP/GE
2929 Arch Street
Circa Centre, 12th Floor
Philadelphia, PA 19104-2891

OC000000049301312

Date Mailed: 08/17/2011

NOTICE OF ACCEPTANCE OF POWER OF ATTORNEY

This is in response to the Power of Attorney filed 08/08/2011.

The Power of Attorney in this application is accepted. Correspondence in this application will be mailed to the above address as provided by 37 CFR 1.33.

/hchristian/

Office of Data Management, Application Assistance Unit (571) 272-4000, or (571) 272-4200, or 1-888-786-0101

SitePro, Ex. 2006
TankLogix v. SitePro, IPR2025-00651

UNITED STATES PATENT AND TRADEMARK OFFICE

UNITED STATES DEPARTMENT OF COMMERCE
United States Patent and Trademark Office
Address: COMMISSIONER FOR PATENTS
P.O. Box 1450
Alexandria, Virginia 22313-1450
www.uspto.gov

APPLICATION NUMBER	FILING OR 371(C) DATE	FIRST NAMED APPLICANT	ATTY. DOCKET NO./TITLE
12/794,898	06/07/2010	Francisco M. Gutierrez	15825-0243001 / TEXSTEAM

CONFIRMATION NO. 9904

POWER OF ATTORNEY NOTICE

26231
FISH & RICHARDSON P.C. (DA)
P.O. BOX 1022
MINNEAPOLIS, MN 55440-1022

OC000000049301287

Date Mailed: 08/17/2011

NOTICE REGARDING CHANGE OF POWER OF ATTORNEY

This is in response to the Power of Attorney filed 08/08/2011.

- The Power of Attorney to you in this application has been revoked by the assignee who has intervened as provided by 37 CFR 3.71. Future correspondence will be mailed to the new address of record(37 CFR 1.33).

/hchristian/

Office of Data Management, Application Assistance Unit (571) 272-4000, or (571) 272-4200, or 1-888-786-0101

SitePro, Ex. 2006
TankLogix v. SitePro, IPR2025-00651

UNITED STATES PATENT AND TRADEMARK OFFICE

UNITED STATES DEPARTMENT OF COMMERCE
United States Patent and Trademark Office
Address: COMMISSIONER FOR PATENTS
P.O. Box 1450
Alexandria, Virginia 22313-1450
www.uspto.gov

APPLICATION NO.	FILING DATE	FIRST NAMED INVENTOR	ATTORNEY DOCKET NO.	CONFIRMATION NO.
12/794,898	06/07/2010	Francisco M. Gutierrez	GEDR-0005	9904

16025 7590 04/11/2012
Woodcock Washburn LLP/GE
2929 Arch Street
Circa Centre, 12th Floor
Philadelphia, PA 19104-2891

EXAMINER
GORDON, BRIAN R

ART UNIT	PAPER NUMBER
1773	

NOTIFICATION DATE	DELIVERY MODE
04/11/2012	ELECTRONIC

Please find below and/or attached an Office communication concerning this application or proceeding.

The time period for reply, if any, is set in the attached communication.

Notice of the Office communication was sent electronically on above-indicated "Notification Date" to the following e-mail address(es):

eofficemonitor@woodcock.com
GPO.mail@ge.com

Office Action Summary	Application No.	Applicant(s)	
	12/794,898	GUTIERREZ ET AL.	
	Examiner	Art Unit	
	BRIAN R. GORDON	1773	

-- The MAILING DATE of this communication appears on the cover sheet with the correspondence address --

Period for Reply

A SHORTENED STATUTORY PERIOD FOR REPLY IS SET TO EXPIRE 3 MONTH(S) OR THIRTY (30) DAYS, WHICHEVER IS LONGER, FROM THE MAILING DATE OF THIS COMMUNICATION.

- Extensions of time may be available under the provisions of 37 CFR 1.136(a). In no event, however, may a reply be timely filed after SIX (6) MONTHS from the mailing date of this communication.
- If NO period for reply is specified above, the maximum statutory period will apply and will expire SIX (6) MONTHS from the mailing date of this communication.
- Failure to reply within the set or extended period for reply will, by statute, cause the application to become ABANDONED (35 U.S.C. § 133). Any reply received by the Office later than three months after the mailing date of this communication, even if timely filed, may reduce any earned patent term adjustment. See 37 CFR 1.704(b).

Status

1)☒ Responsive to communication(s) filed on 6-7-10.

2a)☐ This action is **FINAL**. 2b)☒ This action is non-final.

3)☐ An election was made by the applicant in response to a restriction requirement set forth during the interview on _____; the restriction requirement and election have been incorporated into this action.

4)☐ Since this application is in condition for allowance except for formal matters, prosecution as to the merits is closed in accordance with the practice under *Ex parte Quayle*, 1935 C.D. 11, 453 O.G. 213.

Disposition of Claims

5)☒ Claim(s) 1-25 is/are pending in the application.

5a) Of the above claim(s) _____ is/are withdrawn from consideration.

6)☐ Claim(s) _____ is/are allowed.

7)☒ Claim(s) 1-25 is/are rejected.

8)☐ Claim(s) _____ is/are objected to.

9)☐ Claim(s) _____ are subject to restriction and/or election requirement.

Application Papers

10)☒ The specification is objected to by the Examiner.

11)☐ The drawing(s) filed on _____ is/are: a)☐ accepted or b)☐ objected to by the Examiner.

Applicant may not request that any objection to the drawing(s) be held in abeyance. See 37 CFR 1.85(a).

Replacement drawing sheet(s) including the correction is required if the drawing(s) is objected to. See 37 CFR 1.121(d).

12)☐ The oath or declaration is objected to by the Examiner. Note the attached Office Action or form PTO-152.

Priority under 35 U.S.C. § 119

13)☐ Acknowledgment is made of a claim for foreign priority under 35 U.S.C. § 119(a)-(d) or (f).

a)☐ All b)☐ Some * c)☐ None of:

1.☐ Certified copies of the priority documents have been received.

2.☐ Certified copies of the priority documents have been received in Application No. _____.

3.☐ Copies of the certified copies of the priority documents have been received in this National Stage application from the International Bureau (PCT Rule 17.2(a)).

* See the attached detailed Office action for a list of the certified copies not received.

Attachment(s)

1) ☒ Notice of References Cited (PTO-892)
2) ☐ Notice of Draftsperson's Patent Drawing Review (PTO-948)
3) ☒ Information Disclosure Statement(s) (PTO/SB/08) Paper No(s)/Mail Date _____.
4) ☐ Interview Summary (PTO-413) Paper No(s)/Mail Date. _____ .
5) ☐ Notice of Informal Patent Application
6) ☐ Other: _____.

DETAILED ACTION

Specification

1. The lengthy specification has not been checked to the extent necessary to determine the presence of all possible minor errors. Applicant's cooperation is requested in correcting any errors of which applicant may become aware in the specification.

Claim Objections

2. The use of the trademark Modbus has been noted in this application. It should be capitalized wherever it appears and be accompanied by the generic terminology.

Although the use of trademarks is permissible in patent applications, the proprietary nature of the marks should be respected and every effort made to prevent their use in any manner which might adversely affect their validity as trademarks.

Claim Rejections - 35 USC § 112

3. The following is a quotation of the second paragraph of 35 U.S.C. 112:

> The specification shall conclude with one or more claims particularly pointing out and distinctly claiming the subject matter which the applicant regards as his invention.

4. Claims 1-2, 9-10, 12, 16-17, 20-21, and 25 are rejected under 35 U.S.C. 112, second paragraph, as being indefinite for failing to particularly point out and distinctly claim the subject matter which applicant regards as the invention.

As to claims 1, 2, 9, and 10 it is unclear which controller is being referenced by the phrase, "the controller", for claim 1 mentions "a motor controller" and "a controller".

SitePro, Ex. 2006
TankLogix v. SitePro, IPR2025-00651

As to claim 10, it is unclear which controller is being referenced by the phrase, "the system", for claims previously mention "a hydrocarbon transmission system" and "a chemical injection system".

As to claim 12, it is unclear if applicant intends to claim the "a chemical reservoir and the pipeline" as elements of the invention. If so, applicant should clarify such by listing the elements before the “a pump…” For example, such that the claim reads ...."comprising: a chemical reservoir; a pipeline; a pump in fluid communication with the chemical reservoir and the pipeline;” It is further unclear if applicant intends for the recited “a power module” and “a remote computing device” to be elements of the invention.

As to claims12 and 17, it is unclear which controller is being referenced by the phrase “the controller”.

As to claim 16, it is unclear if applicant is attempting to claim the “a remote sensor“ as an element of the invention. As presently drafted, the claim describes how the receiver is intended to function with an unclaimed remoter sensor and unclaimed pipeline.

Claim 20 contains the trademark/trade name Modbus. Where a trademark or trade name is used in a claim as a limitation to identify or describe a particular material or product, the claim does not comply with the requirements of 35 U.S.C. 112, second paragraph. The claim scope is uncertain since the trademark or trade name cannot be used properly to identify any particular material or product. A trademark or trade name is used to identify a source of goods, and not the goods themselves. Thus, a trademark

SitePro, Ex. 2006
TankLogix v. SitePro, IPR2025-00651

or trade name does not identify or describe the goods associated with the trademark or trade name. In the present case, the trademark/trade name is used to identify/describe transmitted data signals, a protocol, and, accordingly, the identification/description is indefinite.

As to claim 21, it is unclear if applicant intends claim the “a chemical reservoir” as an element of the invention or if the reservoir is merely a separate element that can be used with the claimed invention. It is further unclear which controller is being referenced by the phrase "the controller".

As to claim 25, it is unclear if applicant intends claim the “a chemical reservoir” as an element of the invention or if the reservoir is merely a separate element that can be used with the claimed invention. It is further unclear which controller is being referenced by the phrase "the controller".

Claim Rejections - 35 USC § 102

5. The following is a quotation of the appropriate paragraphs of 35 U.S.C. 102 that form the basis for the rejections under this section made in this Office action:

> A person shall be entitled to a patent unless –
>
> (b) the invention was patented or described in a printed publication in this or a foreign country or in public use or on sale in this country, more than one year prior to the date of application for patent in the United States.

6.

Claim Rejections - 35 USC § 103

7. The following is a quotation of 35 U.S.C. 103(a) which forms the basis for all obviousness rejections set forth in this Office action:

SitePro, Ex. 2006
TankLogix v. SitePro, IPR2025-00651

> (a) A patent may not be obtained though the invention is not identically disclosed or described as set forth in section 102 of this title, if the differences between the subject matter sought to be patented and the prior art are such that the subject matter as a whole would have been obvious at the time the invention was made to a person having ordinary skill in the art to which said subject matter pertains. Patentability shall not be negatived by the manner in which the invention was made.

8. The factual inquiries set forth in *Graham* v. *John Deere Co.*, 383 U.S. 1, 148 USPQ 459 (1966), that are applied for establishing a background for determining obviousness under 35 U.S.C. 103(a) are summarized as follows:

1. Determining the scope and contents of the prior art.
2. Ascertaining the differences between the prior art and the claims at issue.
3. Resolving the level of ordinary skill in the pertinent art.
4. Considering objective evidence present in the application indicating obviousness or nonobviousness.

9. This application currently names joint inventors. In considering patentability of the claims under 35 U.S.C. 103(a), the examiner presumes that the subject matter of the various claims was commonly owned at the time any inventions covered therein were made absent any evidence to the contrary. Applicant is advised of the obligation under 37 CFR 1.56 to point out the inventor and invention dates of each claim that was not commonly owned at the time a later invention was made in order for the examiner to consider the applicability of 35 U.S.C. 103(c) and potential 35 U.S.C. 102(e), (f) or (g) prior art under 35 U.S.C. 103(a).

10. Claims 1-2, 6, 9, 12, 14, and 20-22 are rejected under 35 U.S.C. 102(b) as anticipated by or, in the alternative, under 35 U.S.C. 103(a) as obvious over Uffenheimer et al., US 2002/0192113.

Uffenheimer et al. disclose a high throughput fluid handling system (injection system) as shown in Figure 2. The high throughput fluid handling system is constructed similarly to the fluid handling system of FIG. 1 with the addition of an electronically

controllable secondary syringe pump 164 with an integral pump motor. (pump and pump motor) The secondary syringe pump 164 is configured with a motor-driven syringe 163 connected to a four-port switching valve 162. The four-port switching valve 162 is in turn connected to the central bore 122 of the injection port/wash station 120, the conduit 127 leading to the flow cell 130, and to the system fluid reservoir 114 (reservoir) via two-way valve 166. FIG. 2 shows the fluid handling system with the four-port switching valve 162 in position A, connecting the central bore 122 with the conduit 127 leading to the flow cell 130 and connecting the motor-driven syringe 163 of the secondary syringe pump 164 with the system fluid reservoir 114 through the two-way valve 166. FIG. 3 shows the fluid handling system with the four-port switching valve 162 in position B, connecting the central bore 122 with the system fluid reservoir 114 through the two-way valve 166 and connecting the motor-driven syringe 163 of the secondary syringe pump 164 with the tubing 127 leading to the flow cell 130 (hydrocarbon transmission system including a sensor). (paragraph 0103).

Most of the major mechanical and electrical components of the fluid handling system are enclosed within a housing 210, including a power supply, a programmable electronic motion controller 214, and other mechanical and electromechanical components. The programmable electronic motion controller 214 may be a Logosol 4-axis DC motor driver/controller board with integral amplifiers, with a 24 VDC power input and an RS-232 communication port for connecting to a host computer (remote computer). Components usable in place of those listed are commercially available and easily found. (paragraph 0137).

While Uffenheimer discloses the device may be connected to host computer (remote computer), the reference does not specify that instructions, signals, commands are communicated through a controller to provide for adjusting the motor controller. It is inherently known that the commands, instructions, signals, codes, etc. transmitted from the host computer are provide through the RS-232 communication port and relayed/translated through the controller board to the other electrical components of the system including the motor controller.

Claim 6 is directed broad categories or properties of chemicals. Whether or not a chemical functions or is referred to as a foamer, demulsifier, or a corrosion/paraffin inhibitor, depends not only what the specific chemical is, but also the specific application. Water could be a foamer, demulsifier, or inhibitor.

As to the user interface, it is conventionally known in the art that computers include a keyboard, mouse, touch screen displays, monitors, etc. or other user interfaces to allow for displaying and manipulation of data.

Claim Rejections - 35 USC § 103

11. The following is a quotation of 35 U.S.C. 103(a) which forms the basis for all obviousness rejections set forth in this Office action:

> (a) A patent may not be obtained though the invention is not identically disclosed or described as set forth in section 102 of this title, if the differences between the subject matter sought to be patented and the prior art are such that the subject matter as a whole would have been obvious at the time the invention was made to a person having ordinary skill in the art to which said subject matter pertains. Patentability shall not be negatived by the manner in which the invention was made.

12. The factual inquiries set forth in *Graham* v. *John Deere Co.*, 383 U.S. 1, 148 USPQ 459 (1966), that are applied for establishing a background for determining obviousness under 35 U.S.C. 103(a) are summarized as follows:

1. Determining the scope and contents of the prior art.
2. Ascertaining the differences between the prior art and the claims at issue.
3. Resolving the level of ordinary skill in the pertinent art.
4. Considering objective evidence present in the application indicating obviousness or nonobviousness.

13. This application currently names joint inventors. In considering patentability of the claims under 35 U.S.C. 103(a), the examiner presumes that the subject matter of the various claims was commonly owned at the time any inventions covered therein were made absent any evidence to the contrary. Applicant is advised of the obligation under 37 CFR 1.56 to point out the inventor and invention dates of each claim that was not commonly owned at the time a later invention was made in order for the examiner to consider the applicability of 35 U.S.C. 103(c) and potential 35 U.S.C. 102(e), (f) or (g) prior art under 35 U.S.C. 103(a).

14. Claims 3-5, 7-8, 10-11, 13-19, and 23-25 are rejected under 35 U.S.C. 103(a) as being unpatentable over Uffenheimer et al., as applied to claims 1-2, 6, 9, 12, 14, and 20-22 above, and further in view of Trygstad et al., US 2011/0111509.

Uffenheimer et al. do not disclose monitoring a parameter of a hydrocarbon transmission system.

Trygstad et al. disclose an apparatus (hydrocarbon transmission system) and method for closed-loop control of a hydrocarbon process having at least one liquid hydrocarbon mixture flowing therethrough, which liquid hydrocarbon mixture includes an unknown concentration of at least three components including hydrocarbons and water. The apparatus includes a fluid flow path configured to convey the liquid mixture continuously in a downstream direction therethrough. A Raman spectrometer is

disposed along the fluid flow path, and configured for measuring a first property of the liquid mixture. A separator is disposed upstream of the Raman spectrometer along the fluid flow path, the separator configured to remove hydrocarbon present in a gas or liquid phase distinct from that of the liquid mixture, wherein the liquid mixture is conveyed continuously through the Raman spectrometer (sensor). A processor is configured for capturing data generated by the Raman spectrometer and conductivity sensor and using the data in combination with a model of responsivities to various levels of the components at various temperatures to determine temperature compensated levels of the properties in the liquid mixture while the liquid mixture flows continuously through the fluid flow path. A process control module (PCM) including a process model of the hydrocarbon process, is communicably coupled to the analyzer and communicably couplable to the hydrocarbon process. The PCM is configured to receive the temperature compensated concentration (monitoring at least one parameter) from the analyzer as an input to the process model, and to generate at least one output (translating parameter) configured to affect operation of, and receivable by, the hydrocarbon process. (paragraph 0020).

FIG. 5, illustrates an Acid Catalyst Analyzer, or ACA, 20 (hydrocarbon transmission system), includes a temperature detector 22, an instrument 24, and optionally, one or more other instruments 26, disposed along a fluid flow path 28 as shown. ACA 20 also includes a (e.g., remote) data system (processor) 30 configured to capture and process signals from the temperature detector 22 and instruments 24, 26,

etc., apply a model that interprets those signals, and the concentration of the catalyst, e.g., to a conventional alkylation unit control system (not shown). (paragraph 0053).

The systems are implemented in various computing environments. For example, the present invention may be implemented on a conventional IBM PC or equivalent, multi-nodal system (e.g., LAN) or networking system (e.g., Internet, WWW, wireless web), and/or conventional process control network. All programming and data related thereto are stored in computer memory, static or dynamic or non-volatile, and may be retrieved by the user in any of: conventional computer storage, display (e.g., CRT, flat panel LCD, plasma, etc.) and/or hardcopy (i.e., printed) formats. The programming of the present invention may be implemented by one skilled in the art of computer systems and/or software design. (paragraph 0145).

It would have been obvious to one of ordinary skill in the art at the time of the invention to recognize that an injection system or multiple injection systems may be employed to inject sample testing fluids within the analytical hydrocarbon system as taught by Trygstad et al. to monitor and determine the concentration of the liquid mixture.

Conclusion

15. The prior art made of record and not relied upon is considered pertinent to applicant's disclosure. Sampson; Donald L.; Tsangaris; Andreas et al.; Redmond; Scott D.; Mian, Alec et al.; Redmond; Scott D.; Pamula; Vamsee K. et al.; Nova; Michael P. et al.; Lemme; Charles D. et al.; Jafari; Nasser et al.; Smith; Gregory F. et al.; Ford; Anthony et al.; Druyor-Sanchez; Bobbi et al.; Mullis; Kary B. et al.; Gablin; Kenneth A. et

al.; Butler; James Charles; Uffenheimer; Kenneth F. et al.; Tisone; Thomas C. et al.; Behringer; Bruce E. et al.; Cantatore; Luigi et al.; Labriola, II; Donald P.; Meador; James W. et al.; Kowalski; Carl; Bjornson; Torleif O. et al.; Pfost; Dale R. et al.; Miledi; Rico et al.; and Churchill, Carl et al. disclose analysis and monitoring systems.

Any inquiry concerning this communication or earlier communications from the examiner should be directed to BRIAN R. GORDON whose telephone number is (571)272-1258. The examiner can normally be reached on M-F, 1st Fri. Off.

If attempts to reach the examiner by telephone are unsuccessful, the examiner's supervisor, Jill Warden can be reached on 571-272-1267. The fax phone number for the organization where this application or proceeding is assigned is 571-273-8300.

Information regarding the status of an application may be obtained from the Patent Application Information Retrieval (PAIR) system. Status information for published applications may be obtained from either Private PAIR or Public PAIR. Status information for unpublished applications is available through Private PAIR only. For more information about the PAIR system, see http://pair-direct.uspto.gov. Should you have questions on access to the Private PAIR system, contact the Electronic Business Center (EBC) at 866-217-9197 (toll-free). If you would like assistance from a USPTO Customer Service Representative or access to the automated information system, call 800-786-9199 (IN USA OR CANADA) or 571-272-1000.

/BRIAN R GORDON/
Primary Examiner, Art Unit 1773

SitePro, Ex. 2006
TankLogix v. SitePro, IPR2025-00651

Notice of References Cited	Application/Control No. 12/794,898	Applicant(s)/Patent Under Reexamination GUTIERREZ ET AL.	
	Examiner BRIAN R. GORDON	Art Unit 1773	Page 1 of 3

U.S. PATENT DOCUMENTS

*		Document Number Country Code-Number-Kind Code	Date MM-YYYY	Name	Classification
*	A	US-2012/0071702	03-2012	BUTLER, James Charles	585/733
*	B	US-2011/0111509	05-2011	Trygstad et al.	436/55
*	C	US-2009/0020456	01-2009	Tsangaris et al.	208/133
*	D	US-2007/0259220	11-2007	Redmond, Scott D.	429/012
*	E	US-2007/0202608	08-2007	UFFENHEIMER et al.	436/180
*	F	US-2006/0211132	09-2006	Miledi et al.	436/180
*	G	US-2004/0219688	11-2004	Churchill et al.	436/180
*	H	US-2004/0197230	10-2004	Lemme et al.	422/063
*	I	US-2004/0072364	04-2004	Tisone et al.	436/180
*	J	US-2002/0192113	12-2002	Uffenheimer et al.	422/67
*	K	US-2002/0159919	10-2002	Churchill et al.	422/100
*	L	US-2001/0055812	12-2001	MIAN et al.	436/45
*	M	US-2009/0123339	05-2009	Sampson, Donald L.	422/105

FOREIGN PATENT DOCUMENTS

*		Document Number Country Code-Number-Kind Code	Date MM-YYYY	Country	Name	Classification
	N					
	O					
	P					
	Q					
	R					
	S					
	T					

NON-PATENT DOCUMENTS

*		Include as applicable: Author, Title Date, Publisher, Edition or Volume, Pertinent Pages)
	U	
	V	
	W	
	X	

*A copy of this reference is not being furnished with this Office action. (See MPEP § 707.05(a).)
Dates in MM-YYYY format are publication dates. Classifications may be US or foreign.

Notice of References Cited	Application/Control No. 12/794,898	Applicant(s)/Patent Under Reexamination GUTIERREZ ET AL.	
	Examiner BRIAN R. GORDON	Art Unit 1773	Page 2 of 3

U.S. PATENT DOCUMENTS

*		Document Number Country Code-Number-Kind Code	Date MM-YYYY	Name	Classification
*	A	US-8,147,773	04-2012	Lemme et al.	422/501
*	B	US-8,066,946	11-2011	Redmond, Scott D.	422/105
*	C	US-8,012,768	09-2011	Jafari et al.	436/180
*	D	US-7,939,021	05-2011	Smith et al.	422/68.1
*	E	US-7,939,017	05-2011	Uffenheimer et al.	422/63
*	F	US-7,815,871	10-2010	Pamula et al.	422/404
*	G	US-7,378,058	05-2008	Lemme et al.	422/523
*	H	US-6,416,713	07-2002	Ford et al.	422/63
*	I	US-6,093,574	07-2000	Druyor-Sanchez et al.	436/180
*	J	US-6,063,339	05-2000	Tisone et al.	422/67
*	K	US-5,961,923	10-1999	Nova et al.	506/4
*	L	US-5,908,599	06-1999	Behringer et al.	422/50
*	M	US-5,772,963	06-1998	Cantatore et al.	422/67

FOREIGN PATENT DOCUMENTS

*		Document Number Country Code-Number-Kind Code	Date MM-YYYY	Country	Name	Classification
	N					
	O					
	P					
	Q					
	R					
	S					
	T					

NON-PATENT DOCUMENTS

*		Include as applicable: Author, Title Date, Publisher, Edition or Volume, Pertinent Pages)
	U	
	V	
	W	
	X	

*A copy of this reference is not being furnished with this Office action. (See MPEP § 707.05(a).)
Dates in MM-YYYY format are publication dates. Classifications may be US or foreign.

Notice of References Cited	Application/Control No. 12/794,898	Applicant(s)/Patent Under Reexamination GUTIERREZ ET AL.	
	Examiner BRIAN R. GORDON	Art Unit 1773	Page 3 of 3

U.S. PATENT DOCUMENTS

*		Document Number Country Code-Number-Kind Code	Date MM-YYYY	Name	Classification
*	A	US-5,656,493	08-1997	Mullis et al.	435/286.1
*	B	US-5,428,470	06-1995	Labriola, II, Donald P.	398/109
*	C	US-5,411,065	05-1995	Meador et al.	141/1
*	D	US-5,333,675	08-1994	Mullis et al.	165/268
*	E	US-5,139,744	08-1992	Kowalski, Carl	422/67
*	F	US-5,125,748	06-1992	Bjornson et al.	356/414
*	G	US-5,108,703	04-1992	Pfost et al.	422/65
*	H	US-5,104,621	04-1992	Pfost et al.	422/67
*	I	US-4,196,169	04-1980	Gablin et al.	422/159
	J	US-			
	K	US-			
	L	US-			
	M	US-			

FOREIGN PATENT DOCUMENTS

*		Document Number Country Code-Number-Kind Code	Date MM-YYYY	Country	Name	Classification
	N					
	O					
	P					
	Q					
	R					
	S					
	T					

NON-PATENT DOCUMENTS

*		Include as applicable: Author, Title Date, Publisher, Edition or Volume, Pertinent Pages)
	U	
	V	
	W	
	X	

*A copy of this reference is not being furnished with this Office action. (See MPEP § 707.05(a).)
Dates in MM-YYYY format are publication dates. Classifications may be US or foreign.

Index of Claims	Application/Control No.	Applicant(s)/Patent Under Reexamination
	12794898	GUTIERREZ ET AL.
	Examiner	**Art Unit**
	BRIAN R GORDON	1773

✓	Rejected	-	Cancelled	N	Non-Elected	A	Appeal
=	Allowed	÷	Restricted	I	Interference	O	Objected

☐ Claims renumbered in the same order as presented by applicant ☐ CPA ☐ T.D. ☐ R.1.47

CLAIM		DATE								
Final	Original	04/05/2012								
	1	✓								
	2	✓								
	3	✓								
	4	✓								
	5	✓								
	6	✓								
	7	✓								
	8	✓								
	9	✓								
	10	✓								
	11	✓								
	12	✓								
	13	✓								
	14	✓								
	15	✓								
	16	✓								
	17	✓								
	18	✓								
	19	✓								
	20	✓								
	21	✓								
	22	✓								
	23	✓								
	24	✓								
	25	✓								

Substitute Form PTO-1449 (Modified) U.S. Department of Commerce Patent and Trademark Office	Attorney Docket No. 15825-0243001	Application No.
Information Disclosure Statement by Applicant (Use several sheets if necessary)	Applicant Gutierrez et al.	
(37 CFR §1.98(b))	Filing Date June 7, 2010	Group Art Unit

U.S. Patent Documents

Examiner Initial	Desig. ID	Document Number	Publication Date	Patentee	Class	Subclass	Filing Date If Appropriate
	1	6,131,125	10/10/2000	Rostoker et al.			
	2	6,886,414	05/03/2005	Gutierrez et al.			
	3	7,349,813	03/25/2008	Gutierrez et al.			
	4	7,659,712	02/09/2010	Gutierrez			
	5	20070161367	07/12/2007	Dobrowski et al.			
	6	20070175640	08/02/2007	Atencio et al.			
	7						
	8						
	9						
	10						
	11						

Foreign Patent Documents or Published Foreign Patent Applications

Examiner Initial	Desig. ID	Document Number	Publication Date	Country or Patent Office	Class	Subclass	Translation Yes	Translation No
	12							
	13							
	14							
	15							
	16							

Other Documents (include Author, Title, Date, and Place of Publication)

Examiner Initial	Desig. ID	Document
	17	
	18	
	19	
	20	

Examiner Signature	Date Considered
/Brian Gordon/	04/05/2012

EXAMINER: Initials citation considered. Draw line through citation if not in conformance and not considered. Include copy of this form with next communication to applicant.

Substitute Disclosure Form (PTO-1449)

ALL REFERENCES CONSIDERED EXCEPT WHERE LINED THROUGH. /B.G./

SitePro, Ex. 2006
TankLogix v. SitePro, IPR2025-00651

Search Notes	Application/Control No.	Applicant(s)/Patent Under Reexamination
	12794898	GUTIERREZ ET AL.
	Examiner	**Art Unit**
	BRIAN R GORDON	1773

SEARCHED

Class	Subclass	Date	Examiner
436	43, 50, 55, 174, 180, 807	4-5-12	BG
422	62-63, 68.1, 81, 501, 505, 509, 105,, 107-108	4-5-12	BG
700	266	4-5-12	BG

SEARCH NOTES

Search Notes	Date	Examiner
classes 436, 422 plus text search	4-4-12	BG

INTERFERENCE SEARCH

Class	Subclass	Date	Examiner

SitePro, Ex. 2006
TankLogix v. SitePro, IPR2025-00651

UNITED STATES PATENT AND TRADEMARK OFFICE

UNITED STATES DEPARTMENT OF COMMERCE
United States Patent and Trademark Office
Address: COMMISSIONER FOR PATENTS
P.O. Box 1450
Alexandria, Virginia 22313-1450
www.uspto.gov

APPLICATION NO.	FILING DATE	FIRST NAMED INVENTOR	ATTORNEY DOCKET NO.	CONFIRMATION NO.
12/794,898	06/07/2010	Francisco M. Gutierrez	GEDR-0005	9904

16025 7590 05/04/2012
Woodcock Washburn LLP/GE
2929 Arch Street
Circa Centre, 12th Floor
Philadelphia, PA 19104-2891

EXAMINER
GORDON, BRIAN R

ART UNIT	PAPER NUMBER
1773	

NOTIFICATION DATE	DELIVERY MODE
05/04/2012	ELECTRONIC

Please find below and/or attached an Office communication concerning this application or proceeding.

The time period for reply, if any, is set in the attached communication.

Notice of the Office communication was sent electronically on above-indicated "Notification Date" to the following e-mail address(es):

eofficemonitor@woodcock.com
GPO.mail@ge.com

Applicant-Initiated Interview Summary	Application No.	Applicant(s)	
	12/794,898	GUTIERREZ ET AL.	
	Examiner	Art Unit	
	BRIAN R. GORDON	1773	

All participants (applicant, applicant's representative, PTO personnel):

(1) *BRIAN R. GORDON*. (3)_____.

(2) *Michael Kline*. (4)_____.

Date of Interview: *01 May 2012*.

Type: ☒ Telephonic ☐ Video Conference
☐ Personal [copy given to: ☐ applicant ☐ applicant's representative]

Exhibit shown or demonstration conducted: ☐ Yes ☒ No.
If Yes, brief description: _____.

Issues Discussed ☐101 ☒112 ☒102 ☒103 ☐Others
(For each of the checked box(es) above, please describe below the issue and detailed description of the discussion)

Claim(s) discussed: *1-25*.

Identification of prior art discussed: *Uffenheimer et al. and Trygstad et al.* .

Substance of Interview
(For each issue discussed, provide a detailed description and indicate if agreement was reached. Some topics may include: identification or clarification of a reference or a portion thereof, claim interpretation, proposed amendments, arguments of any applied references etc...)

Applicant submitted proposed amendments for the examiner to review. Applicant explained how such amendments overcome the previous objections and rejections. The examiner agreed that it appears as if applicant's amendments are sufficient to overcome the previous objections and 112 rejections. However, the examiner pointed out further issues directed to the language of the "a pump…" paragraph of claim 1 and the use of the article "at" relative to communication protocols throughout the claims. Applicant agreed to further clarify such issues.

As to the art rejections, applicant presented arguments as to why the instant invention is distinguished from the prior art. Applicant will submit such arguments and further support within the official response. The examiner agreed to review applicant's response, update the previous search, and respond accordingly.

Applicant recordation instructions: The formal written reply to the last Office action must include the substance of the interview. (See MPEP section 713.04). If a reply to the last Office action has already been filed, applicant is given a non-extendable period of the longer of one month or thirty days from this interview date, or the mailing date of this interview summary form, whichever is later, to file a statement of the substance of the interview

Examiner recordation instructions: Examiners must summarize the substance of any interview of record. A complete and proper recordation of the substance of an interview should include the items listed in MPEP 713.04 for complete and proper recordation including the identification of the general thrust of each argument or issue discussed, a general indication of any other pertinent matters discussed regarding patentability and the general results or outcome of the interview, to include an indication as to whether or not agreement was reached on the issues raised.

☒ Attachment

/BRIAN R GORDON/
Primary Examiner, Art Unit 1773

SitePro, Ex. 2006
TankLogix v. SitePro, IPR2025-00651

Summary of Record of Interview Requirements

Manual of Patent Examining Procedure (MPEP), Section 713.04, Substance of Interview Must be Made of Record
A complete written statement as to the substance of any face-to-face, video conference, or telephone interview with regard to an application must be made of record in the application whether or not an agreement with the examiner was reached at the interview.

Title 37 Code of Federal Regulations (CFR) § 1.133 Interviews
Paragraph (b)

In every instance where reconsideration is requested in view of an interview with an examiner, a complete written statement of the reasons presented at the interview as warranting favorable action must be filed by the applicant. An interview does not remove the necessity for reply to Office action as specified in §§ 1.111, 1.135. (35 U.S.C. 132)

37 CFR §1.2 Business to be transacted in writing.
All business with the Patent or Trademark Office should be transacted in writing. The personal attendance of applicants or their attorneys or agents at the Patent and Trademark Office is unnecessary. The action of the Patent and Trademark Office will be based exclusively on the written record in the Office. No attention will be paid to any alleged oral promise, stipulation, or understanding in relation to which there is disagreement or doubt.

The action of the Patent and Trademark Office cannot be based exclusively on the written record in the Office if that record is itself incomplete through the failure to record the substance of interviews.

It is the responsibility of the applicant or the attorney or agent to make the substance of an interview of record in the application file, unless the examiner indicates he or she will do so. It is the examiner's responsibility to see that such a record is made and to correct material inaccuracies which bear directly on the question of patentability.

Examiners must complete an Interview Summary Form for each interview held where a matter of substance has been discussed during the interview by checking the appropriate boxes and filling in the blanks. Discussions regarding only procedural matters, directed solely to restriction requirements for which interview recordation is otherwise provided for in Section 812.01 of the Manual of Patent Examining Procedure, or pointing out typographical errors or unreadable script in Office actions or the like, are excluded from the interview recordation procedures below. Where the substance of an interview is completely recorded in an Examiners Amendment, no separate Interview Summary Record is required.

The Interview Summary Form shall be given an appropriate Paper No., placed in the right hand portion of the file, and listed on the "Contents" section of the file wrapper. In a personal interview, a duplicate of the Form is given to the applicant (or attorney or agent) at the conclusion of the interview. In the case of a telephone or video-conference interview, the copy is mailed to the applicant's correspondence address either with or prior to the next official communication. If additional correspondence from the examiner is not likely before an allowance or if other circumstances dictate, the Form should be mailed promptly after the interview rather than with the next official communication.

The Form provides for recordation of the following information:
- Application Number (Series Code and Serial Number)
- Name of applicant
- Name of examiner
- Date of interview
- Type of interview (telephonic, video-conference, or personal)
- Name of participant(s) (applicant, attorney or agent, examiner, other PTO personnel, etc.)
- An indication whether or not an exhibit was shown or a demonstration conducted
- An identification of the specific prior art discussed
- An indication whether an agreement was reached and if so, a description of the general nature of the agreement (may be by attachment of a copy of amendments or claims agreed as being allowable). Note: Agreement as to allowability is tentative and does not restrict further action by the examiner to the contrary.
- The signature of the examiner who conducted the interview (if Form is not an attachment to a signed Office action)

It is desirable that the examiner orally remind the applicant of his or her obligation to record the substance of the interview of each case. It should be noted, however, that the Interview Summary Form will not normally be considered a complete and proper recordation of the interview unless it includes, or is supplemented by the applicant or the examiner to include, all of the applicable items required below concerning the substance of the interview.

A complete and proper recordation of the substance of any interview should include at least the following applicable items:
1) A brief description of the nature of any exhibit shown or any demonstration conducted,
2) an identification of the claims discussed,
3) an identification of the specific prior art discussed,
4) an identification of the principal proposed amendments of a substantive nature discussed, unless these are already described on the Interview Summary Form completed by the Examiner,
5) a brief identification of the general thrust of the principal arguments presented to the examiner,
   (The identification of arguments need not be lengthy or elaborate. A verbatim or highly detailed description of the arguments is not required. The identification of the arguments is sufficient if the general nature or thrust of the principal arguments made to the examiner can be understood in the context of the application file. Of course, the applicant may desire to emphasize and fully describe those arguments which he or she feels were or might be persuasive to the examiner.)
6) a general indication of any other pertinent matters discussed, and
7) if appropriate, the general results or outcome of the interview unless already described in the Interview Summary Form completed by the examiner.

Examiners are expected to carefully review the applicant's record of the substance of an interview. If the record is not complete and accurate, the examiner will give the applicant an extendable one month time period to correct the record.

Examiner to Check for Accuracy

If the claims are allowable for other reasons of record, the examiner should send a letter setting forth the examiner's version of the statement attributed to him or her. If the record is complete and accurate, the examiner should place the indication, "Interview Record OK" on the paper recording the substance of the interview along with the date and the examiner's initials.

SitePro, Ex. 2006
TankLogix v. SitePro, IPR2025-00651

INTELLECTUAL PROPERTY LAW
ATLANTA • PHILADELPHIA • SEATTLE

/Brian Gordon/
5/1/2012

DO NOT ENTER

FACSIMILE

DO NOT ENTER

DATE: **April 26, 2012**

JOB CODE:

OFFICIAL PAPER

Please deliver this and the following pages to:

Examiner:	**Brian R. Gordon**
U.S.P.T.O. Group Art Unit:	**1773**
Telecopier No.:	**1-571-273-1258**
U.S. Serial No.:	**12/794,898**
Client/Matter No.:	**GEDR-0005**
Sender's Name:	**Michael J. Kline (404-256-8232)**
Pages to Follow:	**14**

DO NOT ENTER

If transmission is not complete, please call our **Philadelphia Office** at **(215) 568-3100**.

COVER MESSAGE:

OFFICIAL FACSIMILE. PLEASE DELIVER TO EXAMINER IMMEDIATELY.

Attached hereto is/are the following documents:

1) Applicant Initiated Interview Request Form
2) Proposed Reply Pursuant to 37 CFR 1.111: Proposed Specification and Claim Amendments

THIS MESSAGE IS INTENDED ONLY FOR THE USE OF THE INDIVIDUAL OR ENTITY TO WHICH IT IS ADDRESSED AND MAY CONTAIN INFORMATION THAT IS PRIVILEGED, CONFIDENTIAL AND EXEMPT FROM DISCLOSURE UNDER APPLICABLE LAW. IF THE READER OF THIS MESSAGE IS NOT THE INTENDED RECIPIENT, OR THE EMPLOYEE OR AGENT RESPONSIBLE FOR DELIVERY OF THE MESSAGE TO THE INTENDED RECIPIENT, YOU ARE HEREBY NOTIFIED THAT ANY DISSEMINATION, DISTRIBUTION OR COPYING OF THIS COMMUNICATION IS STRICTLY PROHIBITED. IF YOU HAVE RECEIVED THIS COMMUNICATION IN ERROR, PLEASE NOTIFY US IMMEDIATELY BY TELEPHONE AND RETURN THE ORIGINAL TO US AT THE ABOVE ADDRESS VIA THE U.S. POSTAL SERVICE. THANK YOU.

WOODCOCK WASHBURN LLP
A Partnership Including Professional Corporations
www.woodcock.com

Doc Code: M865 or FAI.REQ.INTV

PTO/L-413A (08-10)
Approved for use through 07/31/2012. OMB 0651-0031
U.S. Patent and Trademark Office; U.S. DEPARTMENT OF COMMERCE

Applicant Initiated Interview Request Form

Application No.: 12/794,898 First Named Applicant: Francisco M. Gutierrez
Examiner: Brian R. Gordon Art Unit: 1773 Status of Application: Pending

Tentative Participants:
(1) Examiner Gordon (2) Michael J. Kline
(3) _____ (4) _____

Proposed Date of Interview: April 27, 2012 **Proposed Time:** 11:00 **(AM/PM)**

Type of Interview Requested:
(1) [✓] Telephonic (2) [ ] Personal (3) [ ] Video Conference

Exhibit To Be Shown or Demonstrated: [ ] YES [ ] NO
If yes, provide brief description: _____

Issues To Be Discussed

Issues (Rej., Obj., etc)	Claims/ Fig. #s	Prior Art	Discussed	Agreed	Not Agreed
(1)			[ ]	[ ]	[ ]
(2)			[ ]	[ ]	[ ]
(3)			[ ]	[ ]	[ ]
(4)			[ ]	[ ]	[ ]

[ ] Continuation Sheet Attached [✓] Proposed Amendment or Arguments Attached
Brief Description of Arguments to be Presented: Discuss proposed amended claims and how they overcome 35 USC Sections 102, 103, and 112 rejections, and distinguish from Uffenheimer and Trygstad

An interview was conducted on the above-identified application on _____

NOTE: This form should be completed and filed by applicant in advance of the interview (see MPEP § 713.01). If this form is signed by a registered practitioner not of record, the Office will accept this as an indication that he or she is authorized to conduct an interview on behalf of the principal (37 CFR 1.32(a)(3)) pursuant to 37 CFR 1.34. This is not a power of attorney to any above named practitioner. See the Instruction Sheet for this form, which is incorporated by reference. By signing this form, applicant or practitioner is certifying that he or she has read the Instruction Sheet. After the interview is conducted, applicant is advised to file a statement of the substance of this interview (37 CFR 1.133(b)) as soon as possible. This application will not be delayed from issue because of applicant's failure to submit a written record of this interview.

Applicant/Applicant's Representative Signature Examiner/SPE Signature

Michael J. Kline
Typed/Printed Name of Applicant or Representative

31632
Registration Number, if applicable

This collection of information is required by 37 CFR 1.133. The information is required to obtain or retain a benefit by the public which is to file (and by the USPTO to process) an application. Confidentiality is governed by 35 U.S.C. 122 and 37 CFR 1.11 and 1.14. This collection is estimated to take 24 minutes to complete, including gathering, preparing, and submitting the completed application form to the USPTO. Time will vary depending upon the individual case. Any comments on the amount of time you require to complete this form and/or suggestions for reducing this burden, should be sent to the Chief Information Officer, U.S. Patent and Trademark Office, U.S. Department of Commerce, P.O. Box 1450, Alexandria, VA 22313-1450. DO NOT SEND FEES OR COMPLETED FORMS TO THIS ADDRESS. SEND TO: Commissioner for Patents, P.O. Box 1450, Alexandria, VA 22313-1450.
If you need assistance in completing the form, call 1-800-PTO-9199 and select option 2.

PAGE 2/15 * RCVD AT 4/26/2012 4:10:27 PM [Eastern Daylight Time] * SVR:W-PTOFAX-001/22 * DNIS:2731258 * CSID:4044594217 * DURATION (mm-ss):04-47 IPR2025-00651

PTOL-413A (08-10)
Approved for use through 07/31/2012. OMB 0651-0031
U.S. Patent and Trademark Office: U.S. DEPARTMENT OF COMMERCE
Under the Paperwork Reduction Act of 1995, no persons are required to respond to a collection of information unless it displays a valid OMB control number.

Instruction Sheet for:
APPLICANT INITIATED INTERVIEW REQUEST FORM
(Not to be Submitted to the USPTO)

1. If this form is signed by a registered practitioner not of record, the authority to submit the Applicant Initiated Interview Request Form is pursuant to limited authority to act in a representative capacity under 37 CFR 1.34 and further proof of authority to act in a representative capacity may be required. *See* 37 CFR 1.34.

   The Office will accept the signed form as an indication that the registered practitioner not of record is authorized to conduct an interview on behalf of the principal in pursuant to 37 CFR 1.34.

   For more information, see the "Conducting an Interview with a Registered Practitioner Acting in a Representative Capacity" notice which is available on the USPTO Web site at: http://www.uspto.gov/patents/law/notices/2010.jsp.

2. This is not a power of attorney to any named practitioner. Accordingly, any registered practitioner not of record named on the form does not have authority to sign a request to change the correspondence address, a request for express abandonment, a disclaimer, a power of attorney, or other document requiring the signature of the applicant, assignee of the entire interest or an attorney of record. If appropriate, a separate power of attorney to the named practitioner should be executed and filed in the US Patent and Trademark Office.

3. Any interview concerning an unpublished application under 35 U.S.C. § 122(b) with a registered practitioner not of record, pursuant to 37 CFR 1.34, will be conducted based on the information and files supplied by the practitioner in view of the confidentiality requirements of 35 U.S.C. § 122(a).

SitePro, Ex. 2006
PAGE 3/15 * RCVD AT 4/26/2012 4:10:27 PM [Eastern Daylight Time] * SVR:W-PTOFAX-001/22 * DNIS:2731258 * CSID:4044594217 * DURATION (mm-ss):04-02
IPR2025-00651

Privacy Act Statement

The **Privacy Act of 1974 (P.L. 93-579)** requires that you be given certain information in connection with your submission of the attached form related to a patent application or patent. Accordingly, pursuant to the requirements of the Act, please be advised that: (1) the general authority for the collection of this information is 35 U.S.C. 2(b)(2); (2) furnishing of the information solicited is voluntary; and (3) the principal purpose for which the information is used by the U.S. Patent and Trademark Office is to process and/or examine your submission related to a patent application or patent. If you do not furnish the requested information, the U.S. Patent and Trademark Office may not be able to process and/or examine your submission, which may result in termination of proceedings or abandonment of the application or expiration of the patent.

The information provided by you in this form will be subject to the following routine uses:

1. The information on this form will be treated confidentially to the extent allowed under the Freedom of Information Act (5 U.S.C. 552) and the Privacy Act (5 U.S.C 552a). Records from this system of records may be disclosed to the Department of Justice to determine whether disclosure of these records is required by the Freedom of Information Act.
2. A record from this system of records may be disclosed, as a routine use, in the course of presenting evidence to a court, magistrate, or administrative tribunal, including disclosures to opposing counsel in the course of settlement negotiations.
3. A record in this system of records may be disclosed, as a routine use, to a Member of Congress submitting a request involving an individual, to whom the record pertains, when the individual has requested assistance from the Member with respect to the subject matter of the record.
4. A record in this system of records may be disclosed, as a routine use, to a contractor of the Agency having need for the information in order to perform a contract. Recipients of information shall be required to comply with the requirements of the Privacy Act of 1974, as amended, pursuant to 5 U.S.C. 552a(m).
5. A record related to an International Application filed under the Patent Cooperation Treaty in this system of records may be disclosed, as a routine use, to the International Bureau of the World Intellectual Property Organization, pursuant to the Patent Cooperation Treaty.
6. A record in this system of records may be disclosed, as a routine use, to another federal agency for purposes of National Security review (35 U.S.C. 181) and for review pursuant to the Atomic Energy Act (42 U.S.C. 218(c)).
7. A record from this system of records may be disclosed, as a routine use, to the Administrator, General Services, or his/her designee, during an inspection of records conducted by GSA as part of that agency's responsibility to recommend improvements in records management practices and programs, under authority of 44 U.S.C. 2904 and 2906. Such disclosure shall be made in accordance with the GSA regulations governing inspection of records for this purpose, and any other relevant (*i.e.*, GSA or Commerce) directive. Such disclosure shall not be used to make determinations about individuals.
8. A record from this system of records may be disclosed, as a routine use, to the public after either publication of the application pursuant to 35 U.S.C. 122(b) or issuance of a patent pursuant to 35 U.S.C. 151. Further, a record may be disclosed, subject to the limitations of 37 CFR 1.14, as a routine use, to the public if the record was filed in an application which became abandoned or in which the proceedings were terminated and which application is referenced by either a published application, an application open to public inspection or an issued patent.
9. A record from this system of records may be disclosed, as a routine use, to a Federal, State, or local law enforcement agency, if the USPTO becomes aware of a violation or potential violation of law or regulation.

DOCKET NO.: GEDR-0005
Application No.: 12/794,898
Office Action Dated: April 11, 2012

PATENT

IN THE UNITED STATES PATENT AND TRADEMARK OFFICE

In re Application of:
Francisco M. Gutierrez

Confirmation No.: 9904

Application No.: 12/794,898

Group Art Unit: 1773

Filing Date: June 7, 2010

Examiner: Brian R. Gordon

For: CHEMICAL INJECTION SYSTEM

Mail Stop AF
Commissioner for Patents
P.O. Box 1450
Alexandria, VA 22313-1450

Dear Commissioner:

PROPOSED REPLY PURSUANT TO 37 CFR § 1.111

In response to the Official Action dated **April 11, 2012**, reconsideration is respectfully requested in view of the amendments and/or remarks as indicated below:

- ☒ **Amendments to the Specification** begin on page 2 of this paper.
- ☒ **Amendments to the Claims** are reflected in the listing of the claims which begins on page 4 of this paper.
- ☐ **Amendments to the Drawings** begin on page **Error! Bookmark not defined.** of this paper and include an attached replacement sheet.
- ☐ **Remarks** begin on page of this paper.
- ☒ The Commissioner is hereby authorized to charge any fee deficiency, charge any additional fees, or credit any overpayment of fees, associated with this application in connection with this filing, or any future filing, submitted to the U.S. Patent and Trademark Office during the pendency of this application, to Deposit Account No. 23-3050.

SitePro, Ex. 2006
PAGE 5/15 * RCVD AT 4/26/2012 4:10:27 PM [Eastern Daylight Time] * SVR:W-PTOFAX-001/22 * DNIS:2731258 * CSID:4044594217 * DURATION (mm-ss):04-02
IPR2025-00651

Amendments to the Specification:

Please amend paragraph [0023] of Applicants' disclosure as follows:

[0023] In one aspect of one or more general embodiments, the second communication protocol may include a Modbus communication protocol.

Please amend paragraph [0050] of Applicants' disclosure as follows:

[0050] Translation module 145 is communicably coupled to the communication module 140 and the processor 150. Typically, translation module 145 receives data communicated in a particular communication protocol to the system 100 via the communication bus 155 and/or wireless antenna 160 and, when necessary, translates such data to a secondary communication protocol understood by the motor controller 115 or other components of the system 100. For instance, data may be sent to the controller 130 in many different communication protocols, such as RS-232, RS- 485 (Modbus or EIA-485), RS-422 (or EIA-422), TCP/IP, Fieldbus, DeviceNet, and Profibus communication protocols, to name but a few. The motor controller 115 may be configured to receive data in only one, or just a few, protocols (*e.g.*, a version of the Modbus serial communication protocol, such as Modbus RTU, Modbus ASCII, Modbus TCP/IP, Modbus TCP, Modbus over TCP/IP, Modbus over TCP, and/or Modbus Plus). Thus, the translation module 145 allows a remote source of data to be transmitted to the control 130 in a remote protocol without regard to the particular protocol understood by the motor controller 115.

Please amend paragraph [0059] of Applicants' disclosure as follows:

[0059] Each chemical injection system 310 may be positioned at or near a wellsite and/or a pipeline transporting hydrocarbon fluid. In some embodiments, the chemical injection system 310 may be substantially similar to chemical injection system 210 and/or chemical injection system 100 described above. For example, each chemical injection system 310 may include a pump mechanically coupled to a motor, a motor controller, a processor-based controller, and a chemical reservoir. Chemical injection system 310 may be used in such embodiments to inject or otherwise introduce chemicals (*e.g.*, corrosion inhibitors, ethanol, foamer) into a hydrocarbon

SitePro, Ex. 2006
PAGE 6/15 * RCVD AT 4/26/2012 4:10:27 PM [Eastern Daylight Time] * SVR:W-PTOFAX-001/22 * DNIS:2731258 * CSID:4044594217 * DURATION (mm-ss):04-02
IPR2025-00651

conduit. The pump is fluidly coupled to hydrocarbon conduit and the reservoir and draws a specified amount of chemical stored in the reservoir and injects the chemical into the conduit at predefined time intervals, predetermined operating conditions, and/or when commanded. The pump is coupled to a motor, which is electrically coupled to the motor controller. The motor controller receives electrical power (such as, for example, from a solar power module at the chemical injection system 310, as illustrated) and provides the power to the motor. In some embodiments, the motor controller may be a combination starter/disconnect, which provides "onoff" control of electrical power to the pump motor, while in such embodiments, the motor controller may be a variable frequency controller, operable to provide electrical power to the pump motor at a variety of frequencies (and thus rotational motor speeds) as system operating conditions warrant. In some embodiments, the controller may communicate to the motor controller in only one, or just a few, communication protocols (*e.g.*, Modbus communication protocol).

Please amend paragraph [0060] of Applicants' disclosure as follows:

[0060] The controller is communicably coupled to the motor controller and, typically, provides microprocessor-based control of the motor controller and thus motor and pump of chemical injection system 310. In some embodiments, the controller is communicably coupled (*e.g.*, wirelessly, via wired communication, or a combination thereof) to one or more communication stations 320. For example, in some embodiments, data may be transmitted between the communication station 320 and the chemical injection system 310 via a particular communication protocol (*e.g.*, RS-232, RS-485 (Modbus or EIA-485), RS-422 (or EIA-422), TCP/IP, Fieldbus, DeviceNet, and Profibus communication protocols, to name but a few)and over a certain communication form (*e.g.*, cellular, RF, satellite, or other type of communication form). One or more additional communication stations 320 may be interposed between the communication station in direct communication with the chemical injection system 310 and a base transceiver 325. For example, the communication stations 320 may be radio frequency (RF) transceivers that are operable to send and receive RF signals 335 representative of data and/or commands between the chemical injection systems 310 and the base transceiver 325.

SitePro, Ex. 2006
PAGE 7/15 * RCVD AT 4/26/2012 4:10:27 PM [Eastern Daylight Time] * SVR:W-PTOFAX-001/22 * DNIS:2731258 * CSID:4044594217 * DURATION (mm-ss):04-02
IPR2025-00651

This listing of claims will replace all prior versions, and listings, of claims in the application.

Listing of Claims:

1. (Currently amended) A method for controlling a chemical injection system for a hydrocarbon transmission system comprising:

providing a chemical injection system in fluid communication with a hydrocarbon pipeline, said chemical injection system comprising:

one or more chemical fluids adapted to treat a hydrocarbon stream being transmitted through said hydrocarbon transmission system;

a pump driven by a motor and in fluid communication with a chemical reservoir containing said one or more chemical fluids and the hydrocarbon transmission system, the pump adapted to inject said one or more chemical fluids into the hydrocarbon transmission system;

a motor controller coupled to the motor and adapted to control operation of the motor; and

a central controller communicably coupled to the motor controller;

receiving an operational command at the chemical injection system in a first communication protocol from a remote computer;

translating, at the central controller, the operational command at the first communication protocol to an operational command at a second communication protocol different than the first communication protocol;

transmitting the operational command at the second communication protocol from the central controller to the motor controller; and

adjusting the motor controller to control the operation of the motor in response to receiving the operational command at the second communication protocol from the central controller.

2. (Currently amended) The method of claim 1, further comprising:

receiving a second operational command at the chemical injection system in a third communication protocol from the remote computer;

SitePro, Ex. 2006
PAGE 8/15 * RCVD AT 4/26/2012 4:10:27 PM [Eastern Daylight Time] * SVR:W-PTOFAX-001/22 * DNIS:2731258 * CSID:4044594217 * DURATION (mm-ss):04-02
IPR2025-00651

translating, at the central controller, the second operational command at the third communication protocol to the second operational command at the second communication protocol different than the third communication protocol;

transmitting the second operational command at the second communication protocol from the central controller to the motor controller; and

adjusting the motor controller to control the operation of the motor in response to receiving the second operational command at the second communication protocol from the central controller.

3. (Previously presented) The method of claim 2, further comprising:

monitoring at least one parameter of the hydrocarbon transmission system by the chemical injection system;

transmitting the parameter to the remote computer; and

receiving a fourth operational command at one of the first or third communication protocols from the remote computer in response to the parameter.

4. (Currently amended) The method of claim 3, wherein the parameter comprises one of the following:

a fluidic pressure in the hydrocarbon transmission system;

a fluidic ~~flowrate~~ flow rate in the hydrocarbon transmission system;

a percentage concentration by weight or volume of the chemical fluid in the hydrocarbon transmission system;

an operational parameter of the motor;

a controller temperature;

a battery voltage;

a motor current;

a solar cell charge current; and

one or more fault conditions.

SitePro, Ex. 2006
PAGE 9/15 * RCVD AT 4/26/2012 4:10:27 PM [Eastern Daylight Time] * SVR:W-PTOFAX-001/22 * DNIS:2731258 * CSID:4044594217 * DURATION (mm-ss):04-02
IPR2025-00651

5. (Previously presented) The method of claim 3, further comprising:

measuring the parameter with a sensor positioned in the hydrocarbon transmission system; and

wirelessly transmitting a signal representative of the parameter from the sensor to the chemical injection system.

6. (Currently amended) The method of claim 1, wherein the chemical fluids <u>are employed to treat a hydrocarbon stream being transmitted through said pipeline, and</u> comprise at least one of:

a corrosion inhibitor;

a paraffin inhibiter;

a demulsifier;

an ethanol; and

a foamer.

7. (Currently amended) The method of claim 1, wherein receiving an operational command at the chemical injection system in a first communication protocol from a remote computer comprises receiving an operational command at the chemical injection system in a first communication protocol from a remote computer via a <u>wireless</u> ~~radio frequency RF~~ signal.

8. (Previously presented) The method of claim 1, further comprising:

receiving a signal representative of a sensed parameter of the hydrocarbon transmission system in the second communication protocol;

translating the parameter in the second communication protocol to a signal representative of the sensed parameter in the first communication protocol; and

transmitting the signal representative of the sensed parameter in the first communication protocol to the remote computer.

SitePro, Ex. 2006
PAGE 10/15 * RCVD AT 4/26/2012 4:10:27 PM [Eastern Daylight Time] * SVR:W-PTOFAX-001/22 * DNIS:2731258 * CSID:4044594217 * DURATION (mm-ss):04-47
IPR2025-00651

9. (Currently amended) The method of claim 1, wherein adjusting the motor controller to control the operation of the motor in response to receiving the operational command at the second communication protocol from the central controller comprises adjusting a rotational speed of the motor.

10. (Currently amended) The method of claim 1, further comprising:

providing a sensor coupled to the hydrocarbon transmission system and adapted to monitor an operational parameter of the hydrocarbon transmission system;

receiving a signal representative of the operational parameter at the central controller from the sensor; and

automatically adjusting the motor controller to adjust a rotational speed of the motor in response to receiving the signal representative of the operational parameter.

11. (Currently amended) The method of claim 1, further comprising:

providing a second chemical injection system comprising:

a second pump driven by a second motor and in fluid communication with the chemical reservoir and the hydrocarbon transmission system, the second pump adapted to inject one or more chemical fluids into the hydrocarbon transmission system;

a second motor controller coupled to the second motor and adapted to control operation of the second motor; and

a second central controller communicably coupled to the second motor controller;

receiving a third operational command at the second chemical injection system in the first communication protocol from the remote computer;

translating, at the second central controller, the third operational command at the first communication protocol to a third operational command at the second communication;

transmitting the third operational command at the second communication protocol from the second central controller to the second motor controller; and

SitePro, Ex. 2006
PAGE 11/15 * RCVD AT 4/26/2012 4:10:27 PM [Eastern Daylight Time] * SVR:W-PTOFAX-001/22 * DNIS:2731258 * CSID:4044594217 * DURATION (mm-ss):04-27
IPR2025-00651

adjusting the second motor controller to control the operation of the second motor in response to receiving the third operational command at the second communication protocol from the second central controller.

12. (Currently amended) A chemical injection system ~~for a hydrocarbon pipeline~~ comprising:

a hydrocarbon pipeline containing a hydrocarbon stream;

a chemical reservoir containing a chemical fluid adapted to treat the hydrocarbon stream;

a pump in fluid communication with ~~a~~ the chemical reservoir and the pipeline;

a motor coupled to the pump and adapted to drive the pump to transfer ~~a~~ the chemical fluid from the reservoir to the pipeline;

a power module;

a motor controller electrically coupled to ~~a~~ the power module and the motor, the motor controller adapted to adjust a rotational speed of the motor;

a remote computing device; and

a central controller communicably coupled to the motor controller and ~~a~~ the remote computing device, the central controller comprising a translator adapted to receive a signal from the remote computing device in a first communication protocol and translate the signal from the remote computing device to a command in a second communication protocol distinct from the first communication protocol, the command operable to adjust the motor controller to adjust the rotational speed of the motor.

13. (Previously presented) The system of claim 12, wherein the motor controller comprises a variable frequency drive.

14. (Previously presented) The system of claim 12, wherein the translator is further adapted to receive a signal from the remote computing device in a third communication protocol and translate the signal from the remote computing device to a second command in the second communication protocol distinct from the third and the first communication protocols, the

SitePro, Ex. 2006
PAGE 12/15 * RCVD AT 4/26/2012 4:10:27 PM [Eastern Daylight Time] * SVR:W-PTOFAX-001/22 * DNIS:2731258 * CSID:4044594217 * DURATION (mm-ss):04-47
IPR2025-00651

second command operable to adjust the motor controller to adjust the rotational speed of the motor.

15. (Currently amended) The system of claim 12, further comprising a receiver communicably coupled to the central controller and adapted to receive the signal from the remote computing device, the signal comprising a ~~radio frequency (RF)~~ wireless signal.

16. (Currently amended) The system of claim 15, further comprising a remote sensor coupled to the pipeline, wherein the receiver is adapted to receive a second signal from ~~a~~ the remote sensor ~~coupled to the pipeline~~.

17. (Currently amended) The system of claim 16, wherein the central controller is further adapted to receive the second signal from the remote sensor through the receiver and transmit the second signal to the remote computing device.

18. (Previously presented) The system of claim 17, wherein the translator is adapted to receive the second signal from the receiver, the second signal in the second communication protocol, and translate the second signal to a third signal in the first communication protocol.

19. (Currently amended) The system of claim 17, wherein the second signal comprises one of:

a fluidic pressure in the pipeline;
a fluidic ~~flowrate~~ flow rate in the pipeline;
a percentage concentration by weight or volume of chemical fluid in the pipeline; and
an operational parameter of the motor.

SitePro, Ex. 2006
PAGE 13/15 * RCVD AT 4/26/2012 4:10:27 PM [Eastern Daylight Time] * SVR:W-PTOFAX-001/22 * DNIS:2731258 * CSID:4044594217 * DURATION (mm-ss):04-47
IPR2025-00651

20. (Currently amended) The system of claim 12, wherein the second communication protocol comprises a ~~Modbus~~ secondary communication protocol understood by the motor controller.

21. (Currently amended) A system comprising:

a central controller communicably coupled to ~~the~~ a motor controller;

a chemical reservoir containing a chemical fluid adapted to treat a hydrocarbon stream in a hydrocarbon transmission system comprising a hydrocarbon pipeline;

a remote computing system comprising a graphical user interface (GUI);

a sensor coupled with ~~a~~ the hydrocarbon transmission system; and

a chemical injection system, comprising:

a pump in fluid communication with ~~a~~ the chemical reservoir and the hydrocarbon transmission system;

a motor coupled to the pump and adapted to drive the pump to transfer ~~a~~ the chemical fluid from the reservoir to the hydrocarbon transmission system;

a power module adapted to receive solar power and convert the solar power to electrical power;

a motor controller electrically coupled to the power module and the motor, the motor controller adapted to adjust a rotational speed of the motor; and

a central controller communicably coupled to the motor controller, the central controller communicably coupled to the remote computing system and the sensor, the central controller comprising a translator adapted to receive a signal from the remote computing system in a first communication protocol and translate the signal from the remote computing system to a command in a second communication protocol distinct from the first communication protocol, the command operable to adjust the motor controller to adjust the rotational speed of the motor.

22. (Previously presented) The system of claim 21, wherein the GUI is adapted to display one or more operational parameters of the chemical injection system.

SitePro, Ex. 2006
PAGE 14/15 * RCVD AT 4/26/2012 4:10:27 PM [Eastern Daylight Time] * SVR:W-PTOFAX-001/22 * DNIS:2731258 * CSID:4044594217 * DURATION (mm-ss):04-07
IPR2025-00651

23. (Currently amended) The system of claim 21, further comprising a transceiver communicably coupled to the remote computing station through a communications network, the transceiver in ~~RF~~ wireless communication with the chemical injection system.

24. (Currently amended) The system of claim 23, further comprising one or more communication stations in ~~RF~~ wireless communication with the chemical injection system and the transceiver, each communication station adapted to relay operational parameters of the chemical injection system in the form of ~~RF~~ wireless signals between the transceiver and the chemical injection system.

25. (Currently amended) The system of claim 21, further comprising:

a second sensor coupled with the hydrocarbon transmission system; and

a second chemical injection system, comprising:

a pump in fluid communication with the chemical reservoir and the hydrocarbon transmission system;

a motor coupled to the pump and adapted to drive the pump to transfer the chemical fluid from the reservoir to the hydrocarbon transmission system;

a power module;

a motor controller electrically coupled to the power module and the second motor, the motor controller adapted to adjust a rotational speed of the motor; and

a central controller communicably coupled to the motor controller, the central controller communicably coupled to the remote computing system and the second sensor, the central controller comprising a translator adapted to receive a signal from the remote computing system in the first communication protocol and translate the signal from the remote computing system to a command in the second communication protocol distinct from the first communication protocol, the command operable to adjust the motor controller to adjust the rotational speed of the motor.

SitePro, Ex. 2006
PAGE 15/15 * RCVD AT 4/26/2012 4:10:27 PM [Eastern Daylight Time] * SVR:W-PTOFAX-001/22 * DNIS:2731258 * CSID:4044594217 * DURATION (mm-ss):04-47
IPR2025-00651

IN THE UNITED STATES PATENT AND TRADEMARK OFFICE

In re Application of: **Francisco M. Gutierrez**	**Confirmation No.: 9904**
Application No.: 12/794,898	**Group Art Unit: 1773**
Filing Date: June 7, 2010	**Examiner: Brian R. Gordon**
For: CHEMICAL INJECTION SYSTEM	

Mail Stop AF
Commissioner for Patents
P.O. Box 1450
Alexandria, VA 22313-1450

Dear Commissioner:

PROPOSED REPLY PURSUANT TO 37 CFR § 1.111

In response to the Official Action dated **April 11, 2012**, reconsideration is respectfully requested in view of the amendments and/or remarks as indicated below:

☒ **Amendments to the Specification** begin on page 2 of this paper.

☒ **Amendments to the Claims** are reflected in the listing of the claims which begins on page 4 of this paper.

☐ **Amendments to the Drawings** begin on page of this paper and include an attached replacement sheet.

☒ **Remarks** begin on page 13 of this paper.

☒ The Commissioner is hereby authorized to charge any fee deficiency, charge any additional fees, or credit any overpayment of fees, associated with this application in connection with this filing, or any future filing, submitted to the U.S. Patent and Trademark Office during the pendency of this application, to Deposit Account No. 23-3050.

SitePro, Ex. 2006
TankLogix v. SitePro, IPR2025-00651

Amendments to the Specification:

Please amend paragraph [0023] of Applicants' disclosure as follows:

[0023] In one aspect of one or more general embodiments, the second communication protocol may include a Modbus communication protocol.

Please amend paragraph [0050] of Applicants' disclosure as follows:

[0050] Translation module 145 is communicably coupled to the communication module 140 and the processor 150. Typically, translation module 145 receives data communicated in a particular communication protocol to the system 100 via the communication bus 155 and/or wireless antenna 160 and, when necessary, translates such data to a secondary communication protocol understood by the motor controller 115 or other components of the system 100. For instance, data may be sent to the controller 130 in many different communication protocols, such as RS-232, RS- 485 (Modbus or EIA-485), RS-422 (or EIA-422), TCP/IP, Fieldbus, DeviceNet, and Profibus communication protocols, to name but a few. The motor controller 115 may be configured to receive data in only one, or just a few, protocols (*e.g.*, a version of the Modbus serial communication protocol, such as Modbus RTU, Modbus ASCII, Modbus TCP/IP, Modbus TCP, Modbus over TCP/IP, Modbus over TCP, and/or Modbus Plus). Thus, the translation module 145 allows a remote source of data to be transmitted to the control 130 in a remote protocol without regard to the particular protocol understood by the motor controller 115.

Please amend paragraph [0059] of Applicants' disclosure as follows:

[0059] Each chemical injection system 310 may be positioned at or near a wellsite and/or a pipeline transporting hydrocarbon fluid. In some embodiments, the chemical injection system 310 may be substantially similar to chemical injection system 210 and/or chemical injection system 100 described above. For example, each chemical injection system 310 may include a pump mechanically coupled to a motor, a motor controller, a processor-based controller, and a chemical reservoir. Chemical injection system 310 may be used in such embodiments to inject or otherwise introduce chemicals (*e.g.*, corrosion inhibitors, ethanol, foamer) into a hydrocarbon

SitePro, Ex. 2006
TankLogix v. SitePro, IPR2025-00651

conduit. The pump is fluidly coupled to hydrocarbon conduit and the reservoir and draws a specified amount of chemical stored in the reservoir and injects the chemical into the conduit at predefined time intervals, predetermined operating conditions, and/or when commanded. The pump is coupled to a motor, which is electrically coupled to the motor controller. The motor controller receives electrical power (such as, for example, from a solar power module at the chemical injection system 310, as illustrated) and provides the power to the motor. In some embodiments, the motor controller may be a combination starter/disconnect, which provides "onoff" control of electrical power to the pump motor, while in such embodiments, the motor controller may be a variable frequency controller, operable to provide electrical power to the pump motor at a variety of frequencies (and thus rotational motor speeds) as system operating conditions warrant. In some embodiments, the controller may communicate to the motor controller in only one, or just a few, communication protocols (*e.g.*, Modbus communication protocol).

Please amend paragraph [0060] of Applicants' disclosure as follows:

[0060] The controller is communicably coupled to the motor controller and, typically, provides microprocessor-based control of the motor controller and thus motor and pump of chemical injection system 310. In some embodiments, the controller is communicably coupled (*e.g.*, wirelessly, via wired communication, or a combination thereof) to one or more communication stations 320. For example, in some embodiments, data may be transmitted between the communication station 320 and the chemical injection system 310 via a particular communication protocol (*e.g.*, RS-232, RS-485 (Modbus or EIA-485), RS-422 (or EIA-422), TCP/IP, Fieldbus, DeviceNet, and Profibus communication protocols, to name but a few)and over a certain communication form (*e.g.*, cellular, RF, satellite, or other type of communication form). One or more additional communication stations 320 may be interposed between the communication station in direct communication with the chemical injection system 310 and a base transceiver 325. For example, the communication stations 320 may be radio frequency (RF) transceivers that are operable to send and receive RF signals 335 representative of data and/or commands between the chemical injection systems 310 and the base transceiver 325.

SitePro, Ex. 2006
TankLogix v. SitePro, IPR2025-00651

This listing of claims will replace all prior versions, and listings, of claims in the application.

Listing of Claims:

1. (Currently amended) A method for controlling a chemical injection system for a hydrocarbon transmission system comprising:

providing a chemical injection system in fluid communication with a hydrocarbon pipeline, said chemical injection system comprising:

one or more chemical fluids adapted to treat a hydrocarbon stream being transmitted through said hydrocarbon transmission system;

a pump driven by a motor and in fluid communication with both a chemical reservoir containing said one or more chemical fluids and the hydrocarbon transmission system, the pump adapted to inject said one or more chemical fluids into the hydrocarbon transmission system;

a motor controller coupled to the motor and adapted to control operation of the motor; and

a central controller communicably coupled to the motor controller;

receiving an operational command at the chemical injection system in a first communication protocol from a remote computer;

translating, at the central controller, the operational command ~~at~~ in the first communication protocol to an operational command ~~at~~ in a second communication protocol different ~~than~~ from the first communication protocol;

transmitting the operational command ~~at~~ in the second communication protocol from the central controller to the motor controller; and

adjusting the motor controller to control the operation of the motor in response to receiving the operational command ~~at~~ in the second communication protocol from the central controller.

2. (Currently amended) The method of claim 1, further comprising:

SitePro, Ex. 2006
TankLogix v. SitePro, IPR2025-00651

receiving a second operational command at the chemical injection system in a third communication protocol from the remote computer;

translating, at the central controller, the second operational command ~~at~~ in the third communication protocol to the second operational command ~~at~~ in the second communication protocol different ~~than~~ from the third communication protocol;

transmitting the second operational command ~~at~~ in the second communication protocol from the central controller to the motor controller; and

adjusting the motor controller to control the operation of the motor in response to receiving the second operational command ~~at~~ in the second communication protocol from the central controller.

3. (Currently amended) The method of claim 2, further comprising:

monitoring at least one parameter of the hydrocarbon transmission system by the chemical injection system;

transmitting the parameter to the remote computer; and

receiving a fourth operational command ~~at~~ in one of the first or third communication protocols from the remote computer in response to the parameter.

4. (Currently amended) The method of claim 3, wherein the parameter comprises one of the following:

a fluidic pressure in the hydrocarbon transmission system;

a fluidic ~~flowrate~~ flow rate in the hydrocarbon transmission system;

a percentage concentration by weight or volume of the chemical fluid in the hydrocarbon transmission system;

an operational parameter of the motor;

a controller temperature;

a battery voltage;

a motor current;

SitePro, Ex. 2006
TankLogix v. SitePro, IPR2025-00651

a solar cell charge current; and

one or more fault conditions.

5. (Previously presented) The method of claim 3, further comprising:

measuring the parameter with a sensor positioned in the hydrocarbon transmission system; and

wirelessly transmitting a signal representative of the parameter from the sensor to the chemical injection system.

6. (Currently amended) The method of claim 1, wherein the chemical fluids <u>are employed to treat a hydrocarbon stream being transmitted through said pipeline, and</u> comprise at least one of:

a corrosion inhibitor;

a paraffin inhibiter;

a demulsifier;

an ethanol; and

a foamer.

7. (Currently amended) The method of claim 1, wherein receiving an operational command at the chemical injection system in a first communication protocol from a remote computer comprises receiving an operational command at the chemical injection system in a first communication protocol from a remote computer via a <u>wireless</u> ~~radio frequency RF~~ signal.

8. (Previously presented) The method of claim 1, further comprising:

receiving a signal representative of a sensed parameter of the hydrocarbon transmission system in the second communication protocol;

translating the parameter in the second communication protocol to a signal representative of the sensed parameter in the first communication protocol; and

SitePro, Ex. 2006
TankLogix v. SitePro, IPR2025-00651

transmitting the signal representative of the sensed parameter in the first communication protocol to the remote computer.

9. (Currently amended) The method of claim 1, wherein adjusting the motor controller to control the operation of the motor in response to receiving the operational command ~~at~~ in the second communication protocol from the central controller comprises adjusting a rotational speed of the motor.

10. (Currently amended) The method of claim 1, further comprising:

providing a sensor coupled to the hydrocarbon transmission system and adapted to monitor an operational parameter of the hydrocarbon transmission system;

receiving a signal representative of the operational parameter at the central controller from the sensor; and

automatically adjusting the motor controller to adjust a rotational speed of the motor in response to receiving the signal representative of the operational parameter.

11. (Currently amended) The method of claim 1, further comprising:

providing a second chemical injection system comprising:

a second pump driven by a second motor and in fluid communication with the chemical reservoir and the hydrocarbon transmission system, the second pump adapted to inject one or more chemical fluids into the hydrocarbon transmission system;

a second motor controller coupled to the second motor and adapted to control operation of the second motor; and

a second central controller communicably coupled to the second motor controller;

receiving a third operational command at the second chemical injection system in the first communication protocol from the remote computer;

SitePro, Ex. 2006
TankLogix v. SitePro, IPR2025-00651

translating, at the second central controller, the third operational command ~~at~~ in the first communication protocol to a third operational command ~~at~~ in the second communication protocol;

transmitting the third operational command ~~at~~ in the second communication protocol from the second central controller to the second motor controller; and

adjusting the second motor controller to control the operation of the second motor in response to receiving the third operational command ~~at~~ in the second communication protocol from the second central controller.

12. (Currently amended) A chemical injection system ~~for a hydrocarbon pipeline~~ comprising:

a hydrocarbon pipeline containing a hydrocarbon stream;

a chemical reservoir containing a chemical fluid adapted to treat the hydrocarbon stream;

a pump in fluid communication with ~~a~~ both the chemical reservoir and the pipeline;

a motor coupled to the pump and adapted to drive the pump to transfer ~~a~~ the chemical fluid from the reservoir to the pipeline;

a power module;

a motor controller electrically coupled to ~~a~~ the power module and the motor, the motor controller adapted to adjust a rotational speed of the motor;

a remote computing device; and

a central controller communicably coupled to the motor controller and ~~a~~ the remote computing device, the central controller comprising a translator adapted to receive a signal from the remote computing device in a first communication protocol and translate the signal from the remote computing device to a command in a second communication protocol distinct from the first communication protocol, the command operable to adjust the motor controller to adjust the rotational speed of the motor.

13. (Previously presented) The system of claim 12, wherein the motor controller comprises a variable frequency drive.

14. (Currently amended) The system of claim 12, wherein the translator is further adapted to receive a signal from the remote computing device in a third communication protocol and translate the signal from the remote computing device to a second command in the second communication protocol distinct from the third and the first communication protocol ~~protocols~~, the second command operable to adjust the motor controller to adjust the rotational speed of the motor.

15. (Currently amended) The system of claim 12, further comprising a receiver communicably coupled to the central controller and adapted to receive the signal from the remote computing device, the signal comprising a ~~radio frequency (RF)~~ wireless signal.

16. (Currently amended) The system of claim 15, further comprising a remote sensor coupled to the hydrocarbon pipeline, wherein the receiver is adapted to receive a second signal from ~~a~~ the remote sensor ~~coupled to the pipeline~~.

17. (Currently amended) The system of claim 16, wherein the central controller is further adapted to receive the second signal from the remote sensor through the receiver and transmit the second signal to the remote computing device.

18. (Previously presented) The system of claim 17, wherein the translator is adapted to receive the second signal from the receiver, the second signal in the second communication protocol, and translate the second signal to a third signal in the first communication protocol.

19. (Currently amended) The system of claim 17, wherein the second signal comprises an indication of one of:

a fluidic pressure in the pipeline;

a fluidic ~~flowrate~~ flow rate in the pipeline;

SitePro, Ex. 2006
TankLogix v. SitePro, IPR2025-00651

a percentage concentration by weight or volume of chemical fluid in the pipeline; and

an operational parameter of the motor.

20. (Currently amended) The system of claim 12, wherein the second communication protocol comprises a ~~Modbus~~ secondary communication protocol understood by the motor controller.

21. (Currently amended) A system comprising:

a central controller communicably coupled to ~~the~~ a motor controller;

a chemical reservoir containing a chemical fluid adapted to treat a hydrocarbon stream in a hydrocarbon transmission system comprising a hydrocarbon pipeline;

a remote computing system comprising a graphical user interface (GUI);

a sensor coupled with ~~a~~ the hydrocarbon transmission system; and

a chemical injection system, comprising:

a pump in fluid communication with ~~a~~ both the chemical reservoir and the hydrocarbon transmission system;

a motor coupled to the pump and adapted to drive the pump to transfer ~~a~~ the chemical fluid from the reservoir to the hydrocarbon transmission system;

a power module adapted to receive solar power and convert the solar power to electrical power;

a motor controller electrically coupled to the power module and the motor, the motor controller adapted to adjust a rotational speed of the motor; and

a central controller communicably coupled to the motor controller, the central controller communicably coupled to the remote computing system and the sensor, the central controller comprising a translator adapted to receive a signal from the remote computing system in a first communication protocol and translate the signal from the remote computing system to a command in a second communication protocol distinct from the first communication protocol, the command operable to adjust the motor controller to adjust the rotational speed of the motor.

SitePro, Ex. 2006
TankLogix v. SitePro, IPR2025-00651

22. (Previously presented) The system of claim 21, wherein the GUI is adapted to display one or more operational parameters of the chemical injection system.

23. (Currently amended) The system of claim 21, further comprising a transceiver communicably coupled to the remote computing station through a communications network, the transceiver in ~~RF~~ wireless communication with the chemical injection system.

24. (Currently amended) The system of claim 23, further comprising one or more communication stations in ~~RF~~ wireless communication with the chemical injection system and the transceiver, each communication station adapted to relay operational parameters of the chemical injection system in the form of ~~RF~~ wireless signals between the transceiver and the chemical injection system.

25. (Currently amended) The system of claim 21, further comprising:

a second sensor coupled with the hydrocarbon transmission system; and

a second chemical injection system, comprising:

a second pump in fluid communication with both the chemical reservoir and the hydrocarbon transmission system;

a second motor coupled to the second pump and adapted to drive the second pump to transfer the chemical fluid from the reservoir to the hydrocarbon transmission system;

a power module;

a second motor controller electrically coupled to the power module and the second motor, the second motor controller adapted to adjust a rotational speed of the second motor; and

a second central controller communicably coupled to the second motor controller, the second central controller communicably coupled to the remote computing system and the second sensor, the central controller comprising a translator adapted to receive a signal from the

remote computing system in the first communication protocol and translate the signal from the remote computing system to a command in the second communication protocol distinct from the first communication protocol, the command operable to adjust the second motor controller to adjust the rotational speed of the motor.

REMARKS

EXAMINER INTERVIEW

The undersigned wishes to thank Examiner Gordon for the courtesy extended in conducting an Examiner's telephone interview on May 1, 2012. It is believed that as a result of the interview, compressed prosecution of the subject case might be achieved.

In connection with the Examiner's telephone interview, Applicants submitted proposed amendments for the Examiner to review. Applicants explained how such amendments overcome the previous objections and rejections. The Examiner agreed that it appears as if Applicants' amendments are sufficient to overcome the previous objections and 112 rejections. However, the Examiner pointed out further issues directed to the language of the "a pump…" paragraph of claim 1 and the use of the article "at" relative to communication protocols throughout the claims. Applicants agreed to further clarify such issues, and have done so with the amended claims submitted herewith.

As to the art rejections, Applicants presented arguments as to why the instant invention is distinguished from the prior art. Applicants submit herewith such arguments and further support within the official response. The Examiner agreed to review Applicants' response, update the previous search, and respond accordingly.

SUMMARY OF OFFICE ACTION

Claims 1-25 were presented with this application. All claims stand rejected. With this response, claims 1, 2, 3, 4, 6, 7, 9, 10, 11, 12, 14, 15, 16, 17, 19, 20, 21, 23, 24, and 25 have been amended. All claims are now believed to be in condition for allowance.

Claim Objections

The use of the trademark "Modbus" has been noted in the application. "Modbus" has been capitalized wherever it appears and, in view of the amendments to the specification, is now accompanied by the generic terminology, i.e., "communication protocol." Support for these amendments is found in the as-filed application, e.g., paragraph [0050].

SitePro, Ex. 2006
TankLogix v. SitePro, IPR2025-00651

Claim Rejections under 35 U.S.C. §112

Claims 1-2, 9-10, 12, 16-17, 20-21, and 25 were rejected under 35 U.S.C. §112, second paragraph as being indefinite, claims 1, 2, 9, and 10 being unclear as to which controller was being referenced by the phrase, "the controller," as claim 1 mentions both "a motor controller" and "a controller."

Claim 10 was rejected as unclear which controller is being referenced by the phrase, "the system," as claims previously mention "a hydrocarbon transmission system" and "a chemical injection system."

Claim 12 was rejected as unclear if Applicants intend to claim the "a chemical reservoir and the pipeline" as elements of the invention. The claim was also rejected as unclear if Applicants intend for the recited "a power module" and "a remote computing device" to be elements of the invention.

Clams 12 and 17 were rejected as being unclear which controller is being referenced by the phrase "the controller."

Claim 16 was rejected as being unclear if Applicants intend to claim the "a remote sensor" and "pipeline" as elements of the invention.

Claim 20 was rejected as indefinite for containing the trademark/trade name "Modbus."

Claim 21 was rejected as unclear if Applicants intends to claim the "a chemical reservoir" as an element of the invention and which controller is being referenced by the phrase "the controller."

Claim 25 was rejected as unclear if Applicants intend to claim the "a chemical reservoir" as an element of the invention and which controller is being referenced by the phrase "the controller."

During the telephone interview, Examiner Gordon pointed out that it was not clear in the claims what the pump was in fluid communication with. It was also pointed out that the claims recite in some instances that an operational command occur "at" a communication protocol.

Claim Rejections under 35 U.S.C. §102(b)

Claims 1-2, 6, 9, 12, 14, and 20-22 were rejected under 35 U.S.C. §102(b) as anticipated by or, in the alternative, under 35 U.S.C. §103(a) as obvious over Uffenheimer et al., US 2002/0192113 ("Uffenheimer").

Claim Rejections under 35 U.S.C. § 103(a)

Claims 3-5, 7-8, 10-11, 13-19, and 23-25 were rejected under 35 U.S.C. §103(a) as unpatentable over Uffenheimer, as applied to claims 1-2, 6, 9, 12, 14, and 20-22 above, and further in view of Trygstad et al., US 2011/0111509 ("Trygstad").

SUMMARY OF RESPONSE

Pending Claims

Claims 1-25, as amended, remain in the application. All independent claims have been amended in a sincere effort to place the application in condition for allowance. All claims now require both a motor controller and a "central controller" that is communicably coupled to the motor controller. Support for this amendment is found in the as-filed application, e.g., at claims 12 and 21 as filed, and FIGS. 1 and 2. All independent claims have been further amended to recite a chemical fluid adapted to treat a hydrocarbon stream in a hydrocarbon transmission system. Support for this amendment is found in the as-filed application, e.g., at paragraphs [0053], [0054], [0056], [0063], and FIGS. 2 and 3. It is respectfully submitted that the cited references, alone, and in combination, fail to teach the claims as now amended.

RESPONSE TO EXAMINER'S OBJECTIONS AND REJECTIONS

Rejections Under 35 U.S.C. §112

Claims 1-2, 9-10, 12, 16-17, 20-21, and 25 were rejected under 35 U.S.C. §112, second paragraph as being indefinite, claims 1, 2, 9, and 10 being unclear as to which controller was being referenced by the phrase, "the controller," as claim 1 mentions both "a motor controller" and "a controller." In each of the claims in which the phrase "a controller" or "the controller"

occurred, the claims have been amended to recite "a central controller" or "the central controller." Support for this amendment is found in the as-filed specification, e.g., in claims 12 and 21 as filed, and in FIGS. 1 and 2, which show the controller 130, referred to as the "central controller" in the now amended claims, as being distinct from, but communicably coupled to, the "motor controller" 115.

Claim 10 was rejected as unclear which controller is being referenced by the phrase, "the system," as claims previously mention "a hydrocarbon transmission system" and "a chemical injection system." Claim 10 has now been amended to specify the "central controller," and that "the system" is a "hydrocarbon transmission system." Support for this amendment is found in the as-filed specification, e.g., at paragraph [0037].

Claim 12 was rejected as unclear if Applicants intend to claim the "a chemical reservoir and the pipeline" as elements of the invention. The claim was also rejected as unclear if Applicants intend for the recited "a power module" and "a remote computing device" to be elements of the invention. Claim 12 has now been amended to clarify that the "chemical reservoir," the "pipeline, "a power module," and "a remote computing device" are elements of the claimed invention. Support for these amendments are found in the as-filed application, e.g., in FIGS. 1-3, and at paragraphs [0005], [0038], and [0042].

Clams 12 and 17 were rejected as being unclear which controller is being referenced by the phrase "the controller." Claims 12 and 17 have now been amended to specify that "the controller" refers to "the central controller." Support for this amendment is found in the as-filed application, e.g., in claims 12 and 21 as filed, and in FIGS. 1 and 2.

Claim 16 was rejected as being unclear if Applicants intend to claim the "a remote sensor" and "pipeline" as elements of the invention. Claim 16 has been amended to clarify that "a remote sensor" and "pipeline" are elements of the claimed invention. Support for this amendment is found in the as-filed application, e.g., at paragraph [0020].

Claim 20 was rejected as indefinite for containing the trademark/trade name "Modbus." Claim 20 has now been amended to delete "Modbus" and insert the generic term, "secondary

communication protocol." Support for this amendment is found in the as-filed application, e.g., at paragraph [0050].

Claim 21 was rejected as unclear if Applicants intend to claim the "a chemical reservoir" as an element of the invention and which controller is being referenced by the phrase "the controller." Claim 21 has been amended to specify that "a chemical reservoir" is an element of the claimed invention, and the phrase "the controller" refers to the "central controller." Support for this amendment is found in the as-filed application, e.g., paragraph [0038], FIG. 1, and as-filed claims 12 and 21.

Claim 25 was rejected as unclear if Applicants intend to claim the "a chemical reservoir" as an element of the invention and which controller is being referenced by the phrase "the controller." Claim 25 has been amended to specify that "a chemical reservoir" is an element of the claimed invention, and the phrase "the controller" refers to the "central controller." Support for this amendment is found in the as-filed application, e.g., paragraph [0038], FIG. 1, and as-filed claims 12 and 21.

During the telephone interview, Examiner Gordon pointed out that it was not clear in the claims what the pump was in fluid communication with. It was also pointed out that the claims recite in some instances that an operational command occur "at" a communication protocol.

All claims have now been amended to clarify that the pump is in fluid communication with both the chemical reservoir and the hydrocarbon transmission system (claims 1 and 21) and with both the chemical reservoir and the hydrocarbon pipeline (claim 12). Support in found in the as-filed application at Fig. 1, elements 165, 105, and 120, and the accompanying description, e.g., at paragraph [0039].

In each case where the claims recited an operational command occurring "at" a communication protocol, such claims have been amended to recite that the operational command occurs "in" a recited communication protocol. Support is found in as-filed application in the Abstract, at paragraph [0005], and the as-filed claims, e.g., 8, 12, and 18.

SitePro, Ex. 2006
TankLogix v. SitePro, IPR2025-00651

Rejections Under 35 U.S.C. §102(b)

Claims 1-2, 6, 9, 12, 14, and 20-22 were rejected under 35 U.S.C. §102(b) as anticipated by or, in the alternative, under 35 U.S.C. §103(a) as obvious over Uffenheimer et al., US 2002/0192113 ("Uffenheimer").

It is respectfully submitted that Uffenheimer is non-analogous art to the claimed invention. Uffenheimer relates to an automated fluid handling system configured to prepare fluid samples and introduce them into an analytical instrument. Uffenheimer, Abstract.

It is readily apparent that Uffenheimer is concerned with small, even microliter bench-scale samples, e.g., "This arrangement provides a very compact fluid handling system with a small footprint of only 9x12 inches. . ." Uffenheimer, paragraph [0137]. See also *id.* at paragraph [0061], "In the embodiment shown in FIG. 1, the fluid handling system is configured for handling samples from a microtiter well plate 100," and paragraph [0067], "The small diameter flexible plastic tubing 108, 134, and 136 may be TEFLON (polytetrafluoroethylene) tubing or polyolefin tubing with inside diameters of approximately 0.030-0.040 inches 0.040-0.060 inches, and 0.020-0.030 inches, respectively," and at paragraph [0068], "An exemplary pump for use in the present invention is Cavro Instruments Corp. model XP3000 with a 500 microliter syringe."

It is submitted that one or ordinary skill in the art of the presently claimed invention would not be motivated to look to the teachings of Uffenheimer, which is only concerned with analysis of microliter samples contained in microtiter wells and passed through small diameter flexible plastic tubing six-hundredths of an inch in diameter or less.

All pending claims have now been amended to recite that the claimed invention includes a "hydrocarbon pipeline," which further distinguishes the bench-scale analytical system of Uffenheimer. Support for this amendment is found, e.g., in claim 12, FIGS. 1-3, and paragraphs [0005] and [0028], in the as-filed application. It is respectfully submitted that "hydrocarbon pipeline" is many orders of magnitude different, both in size of the system and in the scope of the hydrocarbon transmission issues presented, from the microliter analysis and few hundredths of an inch diameter tubing of Uffenheimer.

By way of example, submitted herewith is Harris, et al., U.S. Patent No. 7,939,584 ("Harris"), which references hydrocarbon pipelines for carrying crude oil having a length of up to 300 miles and a diameter of up to 40 inches. Harris, col. 2, ll. 8, 14, and in particular col. 11, ll. 31-38:

> "A second field test was conducted utilizing the three aforementioned formulations in a 300 mile long (482 km), 40" (102 cm) diameter pipeline carrying crude . . . . The oil flow was 22,000 barrels per hour . . . and the time for line fill of the pipeline was 5 days."

Also submitted herewith is Clayton, et al., U.S. Patent No. 6,644,848 ("Clayton"), which schematically illustrates in FIG. 1 the size and scale of an underwater hydrocarbon pipeline 10 relative to a massive oil rig 12:

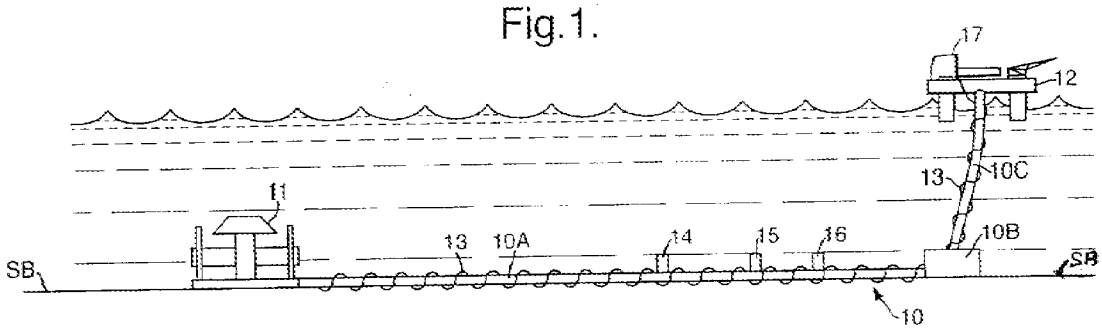

Also submitted herewith is Achour et al., U.S. Patent Application No. US 2010/0304018 ("Achour"), which discloses controlling top of the line (i.e., the "twelve o'clock position") corrosion inside hydrocarbon pipelines carrying primarily gas. FIG. 4 of Achour shows an injection nozzle 21 in the wall of the pipeline 10 for delivering foam matrix 16 into the gas space of the pipeline 10:

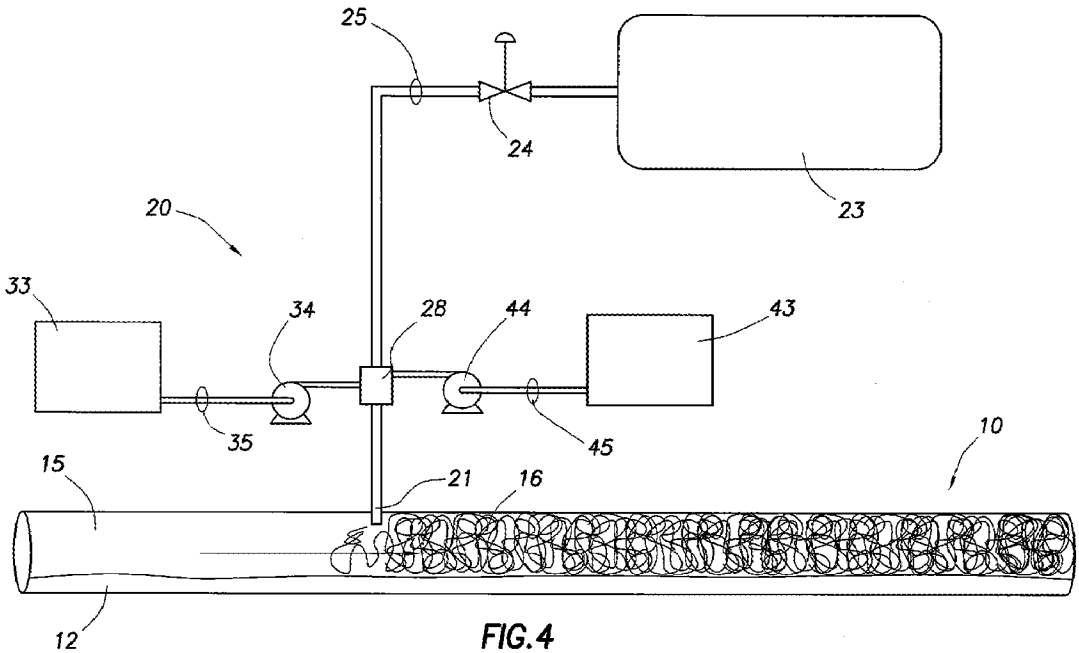

FIG.4

In addition to being non-analogous to the field of the present application, Uffenheimer fails to teach or suggest the invention as now claimed, which includes, in one embodiment, a method for controlling a chemical injection system for a hydrocarbon transmission system comprising:

providing a chemical injection system in fluid communication with a hydrocarbon pipeline, the chemical injection system comprising one or more chemical fluids adapted to treat a hydrocarbon stream being transmitted through the hydrocarbon transmission system, a pump driven by a motor and in fluid communication with a chemical reservoir containing the one or more chemical fluids and the pump in fluid communication with the hydrocarbon transmission system, the pump adapted to inject the one or more chemical fluids into the hydrocarbon transmission system, a motor controller coupled to the motor and adapted to control operation of the motor, and a central controller communicably coupled to the motor controller, receiving an operational command at the chemical injection system in a first communication protocol from a

remote computer, translating, at the central controller, the operational command in the first communication protocol to an operational command in a second communication protocol different from the first communication protocol, transmitting the operational command in the second communication protocol from the central controller to the motor controller, and adjusting the motor controller to control the operation of the motor in response to receiving the operational command in the second communication protocol from the central controller.

Uffenheimer further fails to teach or suggest the invention as now claimed, which includes, in another embodiment, a chemical injection system comprising:

a hydrocarbon pipeline containing a hydrocarbon stream, a chemical reservoir containing a chemical fluid adapted to treat the hydrocarbon stream, a pump in fluid communication with ~~a~~ the chemical reservoir and the pipeline, a motor coupled to the pump and adapted to drive the pump to transfer the chemical fluid from the reservoir to the pipeline, a power module, a motor controller electrically coupled to the power module and the motor, the motor controller adapted to adjust a rotational speed of the motor, a remote computing device, and a central controller communicably coupled to the motor controller and the remote computing device, the central controller comprising a translator adapted to receive a signal from the remote computing device in a first communication protocol and translate the signal from the remote computing device to a command in a second communication protocol distinct from the first communication protocol, the command operable to adjust the motor controller to adjust the rotational speed of the motor.

Uffenheimer further fails to teach or suggest the invention as now claimed, which includes, in another embodiment, a system comprising:

a central controller communicably coupled to a motor controller, a chemical reservoir containing a chemical fluid adapted to treat a hydrocarbon stream in a hydrocarbon transmission system comprising a hydrocarbon pipeline, a remote computing system comprising a graphical

user interface (GUI), a sensor coupled with the hydrocarbon transmission system, and a chemical injection system, comprising a pump in fluid communication with both the chemical reservoir and the hydrocarbon transmission system, a motor coupled to the pump and adapted to drive the pump to transfer the chemical fluid from the reservoir to the hydrocarbon transmission system, a power module adapted to receive solar power and convert the solar power to electrical power, a motor controller electrically coupled to the power module and the motor, the motor controller adapted to adjust a rotational speed of the motor, and a central controller communicably coupled to the motor controller, the central controller communicably coupled to the remote computing system and the sensor, the central controller comprising a translator adapted to receive a signal from the remote computing system in a first communication protocol and translate the signal from the remote computing system to a command in a second communication protocol distinct from the first communication protocol, the command operable to adjust the motor controller to adjust the rotational speed of the motor.

It was noted, with respect to Claim 6, that the claim is directed to broad categories or properties of chemicals, i.e., water could be a foamer, demulsifier, or inhibitor. Claim 6 has now been amended to specify that the chemicals are employed to treat a hydrocarbon stream being transmitted through the pipeline, which it is respectfully submitted would be understood by one of ordinary skill in the art as not including pure water, which is generally detrimental to hydrocarbon streams, which typically seek to minimize the presence of water. It is furthermore respectfully submitted that those of ordinary skill in the art readily understand the types of foamers, demulsifiers, and corrosion or paraffin inhibitors that are useful in treating hydrocarbon streams. Support for this amendment is found in the as-filed application, e.g., at paragraphs [0003], [0038], and [0056].

Rejections Under 35 U.S.C. §103(a)

Claims 3-5, 7-8, 10-11, 13-19, and 23-25 were rejected under 35 U.S.C. §103(a) as unpatentable over Uffenheimer, as applied to claims 1-2, 6, 9, 12, 14, and 20-22 above, and further in view of Trygstad et al., US 2011/0111509 ("Trygstad").

Uffenheimer fails to teach, as conceded by the Examiner, monitoring a parameter of a hydrocarbon transmission system.

Trygstad is concerned with a system and method for composition measurement of acid catalyst and other hydrocarbon streams used in alkylation units of the type operated in oil refineries. Trygstad, paragraph [0036].

It is respectfully submitted that Trygstad, alone or in combination with Uffenheimer, fails to teach or suggest the invention as now claimed.

For example, Claims 1, 12 and 21 now require providing a chemical injection system comprising one or more chemical fluids adapted to treat a hydrocarbon stream being transmitted through a hydrocarbon pipeline of a hydrocarbon transmission system. Trygstad is not concerned with treating a hydrocarbon stream being transmitted through a hydrocarbon pipeline of a hydrocarbon transmission system with a chemical fluid adapted to treat the hydrocarbon stream as now claimed. Rather, Trygstad is concerned with monitoring an alkylation process, for example, by determining the concentration of certain components in a hydrocarbon mixture, such as an acid catalyst, an acid-soluble oil, and water, and potentially a sulfolane additive. See, e.g., Trygstad, paragraphs [0116]-[0117]. Trygsdale's alkylation process provides outputs, such as signals to increase or decrease reactor temperature, pressure, or acid strength to optimize the alkylation process. *Id.*, paragraph [0130]. It is respectfully submitted that the alkylation process taught by Trygstad fails to teach or suggest the claimed systems and methods of providing a chemical injection system for a hydrocarbon stream in a hydrocarbon pipeline of a hydrocarbon transmission system as claimed.

Further, dependent Claim 5 requires, in addition to the limitations of claim 1, wirelessly transmitting a signal representative of a measured parameter from the sensor to the chemical injection system. Claims 7, 15, 23, and 24 have also been amended to recite wireless

connectivity. Support for this amendment can be found in FIGS. 1-3 and the as-filed application, e.g., at paragraphs [0048]-[0049] and [0060]. Trygstad fails to teach such wireless connectivity with a system as now claimed; it is respectfully submitted that Trygstad's vague reference to "wireless web" at paragraph [0145] fails to teach or suggest wirelessly transmitting a signal representative of a measured parameter from a sensor positioned in a hydrocarbon transmission system to a chemical injection system as set forth in Claim 5; or receiving an operational command at a chemical injection system in a first communication protocol from a remote computer by receiving an operational command at the chemical injection system in a first communication protocol from a remote computer via a wireless signal, as required by Claim 7; or a receiver communicably coupled to a central controller and adapted to receive the signal from a remote computing device, the signal comprising a wireless signal, as required by Claim 15; or a transceiver communicably coupled to a remote computing station through a communications network, the transceiver in wireless communication with the chemical injection system, as required by Claim 23; or one or more communication stations in wireless communication with a chemical injection system and a transceiver, each communication station adapted to relay operational parameters of the chemical injection system in the form of wireless signals between the transceiver and the chemical injection system, as required by Claim 24.

The undersigned acknowledges that there may be additional grounds of rejection with respect to certain dependent claims. The undersigned believes that such rejections are moot in view of the amendments and traversals set forth above, however, the right to traverse such rejections in future communications is expressly reserved.

CONCLUSION

Applicants respectfully submit that in view of the amendments and discussion set forth herein, the applicable rejections have been overcome. Accordingly, the present claims should be found to be in condition for allowance.

Date: May 9, 2012

/Michael J. Kline/
Michael J. Kline
Reg. No. 31,632

Woodcock Washburn LLP
Cira Center
2929 Arch Street, 12th Floor
Philadelphia, PA 19104-2891
Telephone: (215) 568-3100
Facsimile: (215) 568-3439

Electronic Acknowledgement Receipt

EFS ID:	12741045
Application Number:	12794898
International Application Number:	
Confirmation Number:	9904
Title of Invention:	Chemical Injection System
First Named Inventor/Applicant Name:	Francisco M. Gutierrez
Customer Number:	16025
Filer:	Michael J. Kline/Ricki Moss
Filer Authorized By:	Michael J. Kline
Attorney Docket Number:	GEDR-0005
Receipt Date:	09-MAY-2012
Filing Date:	07-JUN-2010
Time Stamp:	16:39:46
Application Type:	Utility under 35 USC 111(a)

Payment information:

Submitted with Payment	no

File Listing:

Document Number	Document Description	File Name	File Size(Bytes)/ Message Digest	Multi Part /.zip	Pages (if appl.)
1	Transmittal Letter	2557631_GEDR0005_TRANS_05092012.PDF	187570 8d75c602a8dd0dd30076d321e37d810ae1db7c04	no	2

Warnings:

Information:

SitePro, Ex. 2006
TankLogix v. SitePro, IPR2025-00651

2		2557631_GEDR0005_RESPONSE_05092012.PDF	313696 c59c846ffc17390ff082e0edf9016adfa35ebd4b	yes	25

	Multipart Description/PDF files in .zip description		
	Document Description	**Start**	**End**
	Amendment/Req. Reconsideration-After Non-Final Reject	1	1
	Specification	2	3
	Claims	4	12
	Applicant Arguments/Remarks Made in an Amendment	13	25

Warnings:

Information:

Total Files Size (in bytes):	501266

This Acknowledgement Receipt evidences receipt on the noted date by the USPTO of the indicated documents, characterized by the applicant, and including page counts, where applicable. It serves as evidence of receipt similar to a Post Card, as described in MPEP 503.

<u>New Applications Under 35 U.S.C. 111</u>
If a new application is being filed and the application includes the necessary components for a filing date (see 37 CFR 1.53(b)-(d) and MPEP 506), a Filing Receipt (37 CFR 1.54) will be issued in due course and the date shown on this Acknowledgement Receipt will establish the filing date of the application.

<u>National Stage of an International Application under 35 U.S.C. 371</u>
If a timely submission to enter the national stage of an international application is compliant with the conditions of 35 U.S.C. 371 and other applicable requirements a Form PCT/DO/EO/903 indicating acceptance of the application as a national stage submission under 35 U.S.C. 371 will be issued in addition to the Filing Receipt, in due course.

<u>New International Application Filed with the USPTO as a Receiving Office</u>
If a new international application is being filed and the international application includes the necessary components for an international filing date (see PCT Article 11 and MPEP 1810), a Notification of the International Application Number and of the International Filing Date (Form PCT/RO/105) will be issued in due course, subject to prescriptions concerning national security, and the date shown on this Acknowledgement Receipt will establish the international filing date of the application.

SitePro, Ex. 2006
TankLogix v. SitePro, IPR2025-00651

PTO/SB/21 (07-09)
Approved for use through 07/31/2012. OMB 0651-0031
U.S. Patent and Trademark Office; U.S. DEPARTMENT OF COMMERCE
Under the Paperwork Reduction Act of 1995, no persons are required to respond to a collection of information unless it displays a valid OMB control number.

TRANSMITTAL FORM

(to be used for all correspondence after initial filing)

Application Number	12/794,898
Filing Date	June 7, 2010
First Named Inventor	Francisco M. Gutierrez
Art Unit	1773
Examiner Name	Brian R. Gordon
Attorney Docket Number	255763-1/GEDR-0005
Total Number of Pages in This Submission	27

ENCLOSURES *(Check all that apply)*

- ☐ Fee Transmittal Form
  - ☐ Fee Attached
- ☑ Amendment/Reply
  - ☐ After Final
  - ☐ Affidavits/declaration(s)
- ☐ Extension of Time Request
- ☐ Express Abandonment Request
- ☑ Information Disclosure Statement
- ☐ Certified Copy of Priority Document(s)
- ☐ Reply to Missing Parts/ Incomplete Application
  - ☐ Reply to Missing Parts under 37 CFR 1.52 or 1.53
- ☐ Drawing(s)
- ☐ Licensing-related Papers
- ☐ Petition
- ☐ Petition to Convert to a Provisional Application
- ☐ Power of Attorney, Revocation Change of Correspondence Address
- ☐ Terminal Disclaimer
- ☐ Request for Refund
- ☐ CD, Number of CD(s) _____
  - ☐ Landscape Table on CD
- ☐ After Allowance Communication to TC
- ☐ Appeal Communication to Board of Appeals and Interferences
- ☐ Appeal Communication to TC **(Appeal Notice, Brief, Reply Brief)**
- ☐ Proprietary Information
- ☐ Status Letter
- ☐ Other Enclosure(s) (please Identify below):

Remarks

SIGNATURE OF APPLICANT, ATTORNEY, OR AGENT

Firm Name	Woodcock Washburn LLP		
Signature	/Michael J. Kline/		
Printed name	Michael J. Kline		
Date	May 9, 2012	Reg. No.	31,632

CERTIFICATE OF TRANSMISSION/MAILING

I hereby certify that this correspondence is being facsimile transmitted to the USPTO or deposited with the United States Postal Service with sufficient postage as first class mail in an envelope addressed to: Commissioner for Patents, P.O. Box 1450, Alexandria, VA 22313-1450 on the date shown below:

Signature			
Typed or printed name		Date	

This collection of information is required by 37 CFR 1.5. The information is required to obtain or retain a benefit by the public which is to file (and by the USPTO to process) an application. Confidentiality is governed by 35 U.S.C. 122 and 37 CFR 1.11 and1.14. This collection is estimated to 2 hours to complete, including gathering, preparing, and submitting the completed application form to the USPTO. Time will vary depending upon the individual case. Any comments on the amount of time you require to complete this form and/or suggestions for reducing this burden, should be sent to the Chief Information Officer, U.S. Patent and Trademark Office, U.S. Department of Commerce, P.O. Box 1450, Alexandria, VA 22313-1450. DO NOT SEND FEES OR COMPLETED FORMS TO THIS ADDRESS. **SEND TO: Commissioner for Patents, P.O. Box 1450, Alexandria, VA 22313-1450.**

If you need assistance in completing the form, call 1-800-PTO-9199 and select option 2.

Privacy Act Statement

The **Privacy Act of 1974 (P.L. 93-579)** requires that you be given certain information in connection with your submission of the attached form related to a patent application or patent. Accordingly, pursuant to the requirements of the Act, please be advised that: (1) the general authority for the collection of this information is 35 U.S.C. 2(b)(2); (2) furnishing of the information solicited is voluntary; and (3) the principal purpose for which the information is used by the U.S. Patent and Trademark Office is to process and/or examine your submission related to a patent application or patent. If you do not furnish the requested information, the U.S. Patent and Trademark Office may not be able to process and/or examine your submission, which may result in termination of proceedings or abandonment of the application or expiration of the patent.

The information provided by you in this form will be subject to the following routine uses:

1. The information on this form will be treated confidentially to the extent allowed under the Freedom of Information Act (5 U.S.C. 552) and the Privacy Act (5 U.S.C 552a). Records from this system of records may be disclosed to the Department of Justice to determine whether disclosure of these records is required by the Freedom of Information Act.
2. A record from this system of records may be disclosed, as a routine use, in the course of presenting evidence to a court, magistrate, or administrative tribunal, including disclosures to opposing counsel in the course of settlement negotiations.
3. A record in this system of records may be disclosed, as a routine use, to a Member of Congress submitting a request involving an individual, to whom the record pertains, when the individual has requested assistance from the Member with respect to the subject matter of the record.
4. A record in this system of records may be disclosed, as a routine use, to a contractor of the Agency having need for the information in order to perform a contract. Recipients of information shall be required to comply with the requirements of the Privacy Act of 1974, as amended, pursuant to 5 U.S.C. 552a(m).
5. A record related to an International Application filed under the Patent Cooperation Treaty in this system of records may be disclosed, as a routine use, to the International Bureau of the World Intellectual Property Organization, pursuant to the Patent Cooperation Treaty.
6. A record in this system of records may be disclosed, as a routine use, to another federal agency for purposes of National Security review (35 U.S.C. 181) and for review pursuant to the Atomic Energy Act (42 U.S.C. 218(c)).
7. A record from this system of records may be disclosed, as a routine use, to the Administrator, General Services, or his/her designee, during an inspection of records conducted by GSA as part of that agency's responsibility to recommend improvements in records management practices and programs, under authority of 44 U.S.C. 2904 and 2906. Such disclosure shall be made in accordance with the GSA regulations governing inspection of records for this purpose, and any other relevant (*i.e.*, GSA or Commerce) directive. Such disclosure shall not be used to make determinations about individuals.
8. A record from this system of records may be disclosed, as a routine use, to the public after either publication of the application pursuant to 35 U.S.C. 122(b) or issuance of a patent pursuant to 35 U.S.C. 151. Further, a record may be disclosed, subject to the limitations of 37 CFR 1.14, as a routine use, to the public if the record was filed in an application which became abandoned or in which the proceedings were terminated and which application is referenced by either a published application, an application open to public inspection or an issued patent.
9. A record from this system of records may be disclosed, as a routine use, to a Federal, State, or local law enforcement agency, if the USPTO becomes aware of a violation or potential violation of law or regulation.

SitePro, Ex. 2006
TankLogix v. SitePro, IPR2025-00651

Substitute for 1449/PTO				Complete if Known	
INFORMATION DISCLOSURE STATEMENT BY APPLICANT				**Application Number**	12/794,898
				Filing Date	June 7, 2010
				First Named Inventor	Francisco M. Gutierrez, et al.
				Art Unit	2837
(use as many sheets as necessary)				**Examiner Name**	Brian R Gordon
Sheet	1	of	2	**Attorney Docket Number**	GEDR-0005/255763-1

U. S. PUBLICATION AND PATENT DOCUMENTS				
Examiner Initials	Cite No.	Document Number Number – Kind Code (if known)	Publication or Grant Date MM-DD-YYYY	Name of Patentee or Applicant of Cited Document
	1	2010/0304018 A1	12-02-2010	Achour et al
	2	4,196,169 A	04-01-1980	Gablin et al
	3	5,104,621 A	04-14-1992	Pfost
	4	5,108,703 A	04-28-1992	Pfost
	5	5,125,748 A	06-30-1992	Bjornson et al
	6	5,139,744 A	08-18-1992	Kowalski
	7	5,333,675 A	08-02-1994	Mullis
	8	5,411,065 A	05-02-1995	Meador
	9	5,428,470 A	06-27-1995	Labriola
	10	5,656,493 A	08-12-1997	Mullis
	11	5,772,963 A	06-30-1998	Cantatore
	12	5,908,599 A	06-01-1999	Behringer
	13	5,961,923 A	10-05-1999	Nova
	14	6,063,339 A	05-16-2000	Tisone et al
	15	6,093,574 A	07-25-2000	Druyor-Sanchez
	16	6,416,713 B1	07-09-2002	Ford
	17	6,644,848 B1	11-11-2003	Clayton et al
	18	7,378,058 B2	05-27-2008	Lemme
	19	7,815,871 B2	10-19-2010	Pamula
	20	7,939,017 B2	05-10-2011	Uffenheimer
	21	7,939,021 B2	05-10-2011	Smith
	22	7,939,584 B2	05-10-2011	Harris et al
	23	8,012,768 B2	09-06-2011	Jafari
	24	8,066,946 B2	11-29-2011	Redmond

Examiner Signature		**Date Considered**	

SitePro, Ex. 2006
TankLogix v. SitePro, IPR2025-00651

Substitute for 1449/PTO				Complete if Known	
INFORMATION DISCLOSURE STATEMENT BY APPLICANT				**Application Number**	12/794,898
				Filing Date	June 7, 2010
				First Named Inventor	Francisco M. Gutierrez, et al.
				Art Unit	2837
(use as many sheets as necessary)				**Examiner Name**	Brian R Gordon
Sheet	2	of	2	**Attorney Docket Number**	GEDR-0005/255763-1

U. S. PUBLICATION AND PATENT DOCUMENTS				
Examiner Initials	Cite No.	Document Number Number – Kind Code (if known)	Publication or Grant Date MM-DD-YYYY	Name of Patentee or Applicant of Cited Document
	25	8,147,773 B2	04-03-2012	Lemme

Examiner Signature		**Date Considered**	

SitePro, Ex. 2006
TankLogix v. SitePro, IPR2025-00651

Electronic Patent Application Fee Transmittal

Application Number:	12794898
Filing Date:	07-Jun-2010
Title of Invention:	Chemical Injection System
First Named Inventor/Applicant Name:	Francisco M. Gutierrez
Filer:	Michael J. Kline/Lynn Brown-fischer
Attorney Docket Number:	GEDR-0005

Filed as Large Entity

Utility under 35 USC 111(a) Filing Fees

Description	Fee Code	Quantity	Amount	Sub-Total in USD($)
Basic Filing:				
Pages:				
Claims:				
Miscellaneous-Filing:				
Petition:				
Patent-Appeals-and-Interference:				
Post-Allowance-and-Post-Issuance:				
Extension-of-Time:				

SitePro, Ex. 2006
TankLogix v. SitePro, IPR2025-00651

Description	Fee Code	Quantity	Amount	Sub-Total in USD($)
Miscellaneous:				
Submission- Information Disclosure Stmt	1806	1	180	180
		Total in USD ($)		**180**

SitePro, Ex. 2006
TankLogix v. SitePro, IPR2025-00651

Electronic Acknowledgement Receipt

EFS ID:	12741279
Application Number:	12794898
International Application Number:	
Confirmation Number:	9904
Title of Invention:	Chemical Injection System
First Named Inventor/Applicant Name:	Francisco M. Gutierrez
Customer Number:	16025
Filer:	Michael J. Kline/Lynn Brown-fischer
Filer Authorized By:	Michael J. Kline
Attorney Docket Number:	GEDR-0005
Receipt Date:	09-MAY-2012
Filing Date:	07-JUN-2010
Time Stamp:	16:50:57
Application Type:	Utility under 35 USC 111(a)

Payment information:

Submitted with Payment	yes
Payment Type	Deposit Account
Payment was successfully received in RAM	$180
RAM confirmation Number	3695
Deposit Account	233050
Authorized User	

The Director of the USPTO is hereby authorized to charge indicated fees and credit any overpayment as follows:

Charge any Additional Fees required under 37 C.F.R. Section 1.16 (National application filing, search, and examination fees)

Charge any Additional Fees required under 37 C.F.R. Section 1.17 (Patent application and reexamination processing fees)

SitePro, Ex. 2006
TankLogix v. SitePro, IPR2025-00651

Charge any Additional Fees required under 37 C.F.R. Section 1.19 (Document supply fees)

Charge any Additional Fees required under 37 C.F.R. Section 1.20 (Post Issuance fees)

Charge any Additional Fees required under 37 C.F.R. Section 1.21 (Miscellaneous fees and charges)

File Listing:

Document Number	Document Description	File Name	File Size(Bytes)/ Message Digest	Multi Part /.zip	Pages (if appl.)
1	Transmittal Letter	GEDR-0005_IDS_Trans_05-09-12.PDF	105036 512f777b561280efeacf600f800f38f4efff4789	no	3
Warnings:					
Information:					
2	Information Disclosure Statement (IDS) Form (SB08)	GEDR-0005_IDS_1449_05-09-12.PDF	125087 20576e2c2c3f11e04568cddef551142d92c0c433	no	2
Warnings:					
Information:					
This is not an USPTO supplied IDS fillable form					
3	Fee Worksheet (SB06)	fee-info.pdf	30173 ede90ff53853d8adf8b725ba78efeda05aaeed4a	no	2
Warnings:					
Information:					
			Total Files Size (in bytes):	260296	

This Acknowledgement Receipt evidences receipt on the noted date by the USPTO of the indicated documents, characterized by the applicant, and including page counts, where applicable. It serves as evidence of receipt similar to a Post Card, as described in MPEP 503.

<u>New Applications Under 35 U.S.C. 111</u>
If a new application is being filed and the application includes the necessary components for a filing date (see 37 CFR 1.53(b)-(d) and MPEP 506), a Filing Receipt (37 CFR 1.54) will be issued in due course and the date shown on this Acknowledgement Receipt will establish the filing date of the application.

<u>National Stage of an International Application under 35 U.S.C. 371</u>
If a timely submission to enter the national stage of an international application is compliant with the conditions of 35 U.S.C. 371 and other applicable requirements a Form PCT/DO/EO/903 indicating acceptance of the application as a national stage submission under 35 U.S.C. 371 will be issued in addition to the Filing Receipt, in due course.

<u>New International Application Filed with the USPTO as a Receiving Office</u>
If a new international application is being filed and the international application includes the necessary components for an international filing date (see PCT Article 11 and MPEP 1810), a Notification of the International Application Number and of the International Filing Date (Form PCT/RO/105) will be issued in due course, subject to prescriptions concerning national security, and the date shown on this Acknowledgement Receipt will establish the international filing date of the application.

SitePro, Ex. 2006
TankLogix v. SitePro, IPR2025-00651

IN THE UNITED STATES PATENT AND TRADEMARK OFFICE

In Re Application of:

Francisco M. Gutierrez, et al. **Confirmation No.: 9904**

Application No.: 12/794,898 **Group Art Unit: 2837**

Filing Date: June 7, 2010 **Examiner: Brian R Gordon**

For: Chemical Injection System

Filed Via EFS

INFORMATION DISCLOSURE STATEMENT

Pursuant to 37 CFR § 1.56 and in accordance with 37 CFR §§ 1.97-1.98, information relating to the above-identified application is hereby disclosed. Inclusion of information in this statement is not to be construed as an admission that this information is material as that term is defined in 37 CFR § 1.56(b).

☐ **IDS Filed Under 37 CFR 1.97(b)**

In accordance with § 1.97(b), since this Information Disclosure Statement is being filed either within three months of the filing date of the above-identified application, within three months of the date of entry into the national stage of the above identified application as set forth in § 1.491, before the mailing date of a first Office Action on the merits of the above-identified application, or before the mailing date of a first Office Action after the filing of request for continued examination under § 1.114, no additional fee is required.

☒ **IDS filed Under 37 CFR 1.97(c)**

In accordance with § 1.97(c), this Information Disclosure Statement is being filed after the period set forth in § 1.97(b) above but before the mailing date of either a Final Action under § 1.113 or a Notice of Allowance under § 1.311, or before an action that otherwise closes prosecution in the application, therefore:

☐ Certification in Accordance with § 1.97(e) is attached; or

☒ The fee of **$180.00** as set forth in § 1.17(p) is attached.

SitePro, Ex. 2006
TankLogix v. SitePro, IPR2025-00651

☐ **IDS filed Under 37 CFR 1.97(d)**

In accordance with § 1.97(d), this Information Disclosure Statement is being filed after the mailing date of either a Final Action under § 1.113 or a Notice of Allowance under § 1.311 but before, or simultaneously with, the payment of the Issue Fee, therefore included are: Certification in Accordance with § 1.97(e); and the submission fee of **$180.00** as set forth in § 1.17(p).

CONTENT OF IDS PURSUANT TO 37 CFR 1.98

☒ Copies of reference numbers 1-25 listed on the attached Form PTO-1449 or Substitute Form PTO-1449 are not required to be submitted pursuant to 37 CFR § 1.98(a)(2)(iii).

☐ Copies of reference numbers listed on the attached Form PTO-1449 or Substitute Form PTO-1449 are enclosed herewith.

☐ Copies of reference numbers are not being submitted because they were previously cited by or submitted to the U.S. Patent and Trademark Office in patent application number , filed for which a claim for priority under 35 U.S.C. § 120 has been made in the instant application.

☐ The month of publication for reference numbers is not available. However, the year of publication for these references is sufficiently earlier than the effective US filing date and any foreign priority date so that the particular month of publication is not in issue pursuant to 37 CFR § 1.98(b).

REFERENCES IN A LANGUAGE OTHER THAN ENGLISH

☐ The following documents are not in the English language. Accordingly, a concise explanation of the relevance of the document was incorporated in the specification passages identified below, the document was identified in a foreign communication as identified below or an English language counterpart application has been provided as indicated below.

Foreign Language Document	Cite No.	Pages of Reference in Specification or Relevance of Document

SitePro, Ex. 2006
TankLogix v. SitePro, IPR2025-00651

Foreign Language Document	Cite No.	English Language Counterpart	Cite No.

☐ **CERTIFICATION IN ACCORDANCE WITH § 1.97(e)**

I hereby certify that:

☐ Each item of information contained in this information disclosure statement was first cited in any communication from a foreign patent office in a counterpart foreign application not more than three months prior to the filing of this information disclosure statement.

☐ No item of information contained in this information disclosure statement was cited in a communication from a foreign patent office in a counterpart foreign application, and, to the knowledge of the person signing the certification after making reasonable inquiry, no item of information contained in this information disclosure statement was known to any individual designated in § 1.56(c) more than three months prior to the filing of this information disclosure statement.

Please charge any deficiency or credit any overpayment to Deposit Account No. 23-3050.

Date: 9 May 2012

/Michael J. Kline/
Michael J. Kline
Registration No. 31,632

WOODCOCK WASHBURN LLP
Cira Centre
2929 Arch Street, 12th Floor
Philadelphia, PA 19104-2891
Telephone: (215) 568-3100
Facsimile: (215) 568-3439

SitePro, Ex. 2006
TankLogix v. SitePro, IPR2025-00651

PTO/SB/06 (07-06)
Approved for use through 1/31/2007. OMB 0651-0032
U.S. Patent and Trademark Office; U.S. DEPARTMENT OF COMMERCE
Under the Paperwork Reduction Act of 1995, no persons are required to respond to a collection of information unless it displays a valid OMB control number.

PATENT APPLICATION FEE DETERMINATION RECORD

Substitute for Form PTO-875

Application or Docket Number	Filing Date	☐ To be Mailed
12/794,898	06/07/2010	

APPLICATION AS FILED – PART I

FOR	(Column 1) NUMBER FILED	(Column 2) NUMBER EXTRA	SMALL ENTITY ☐ RATE ($)	SMALL ENTITY FEE ($)	OR	OTHER THAN SMALL ENTITY RATE ($)	OTHER THAN SMALL ENTITY FEE ($)
☐ BASIC FEE (37 CFR 1.16(a), (b), or (c))	N/A	N/A	N/A			N/A	
☐ SEARCH FEE (37 CFR 1.16(k), (i), or (m))	N/A	N/A	N/A			N/A	
☐ EXAMINATION FEE (37 CFR 1.16(o), (p), or (q))	N/A	N/A	N/A			N/A	
TOTAL CLAIMS (37 CFR 1.16(i))	minus 20 =	*	X $ =		OR	X $ =	
INDEPENDENT CLAIMS (37 CFR 1.16(h))	minus 3 =	*	X $ =			X $ =	
☐ APPLICATION SIZE FEE (37 CFR 1.16(s))	If the specification and drawings exceed 100 sheets of paper, the application size fee due is $250 ($125 for small entity) for each additional 50 sheets or fraction thereof. See 35 U.S.C. 41(a)(1)(G) and 37 CFR 1.16(s).						
☐ MULTIPLE DEPENDENT CLAIM PRESENT (37 CFR 1.16(j))							
* If the difference in column 1 is less than zero, enter "0" in column 2.			TOTAL			TOTAL	

APPLICATION AS AMENDED – PART II

AMENDMENT 05/09/2012	(Column 1) CLAIMS REMAINING AFTER AMENDMENT		(Column 2) HIGHEST NUMBER PREVIOUSLY PAID FOR	(Column 3) PRESENT EXTRA	SMALL ENTITY RATE ($)	SMALL ENTITY ADDITIONAL FEE ($)	OR	OTHER THAN SMALL ENTITY RATE ($)	OTHER THAN SMALL ENTITY ADDITIONAL FEE ($)
Total (37 CFR 1.16(i))	* 25	Minus	** 25	= 0	X $ =		OR	X $60=	0
Independent (37 CFR 1.16(h))	* 3	Minus	***3	= 0	X $ =		OR	X $250=	0
☐ Application Size Fee (37 CFR 1.16(s))									
☐ FIRST PRESENTATION OF MULTIPLE DEPENDENT CLAIM (37 CFR 1.16(j))							OR		
					TOTAL ADD'L FEE		OR	TOTAL ADD'L FEE	0

AMENDMENT	(Column 1) CLAIMS REMAINING AFTER AMENDMENT		(Column 2) HIGHEST NUMBER PREVIOUSLY PAID FOR	(Column 3) PRESENT EXTRA	RATE ($)	ADDITIONAL FEE ($)	OR	RATE ($)	ADDITIONAL FEE ($)
Total (37 CFR 1.16(i))	*	Minus	**	=	X $ =		OR	X $ =	
Independent (37 CFR 1.16(h))	*	Minus	***	=	X $ =		OR	X $ =	
☐ Application Size Fee (37 CFR 1.16(s))									
☐ FIRST PRESENTATION OF MULTIPLE DEPENDENT CLAIM (37 CFR 1.16(j))							OR		
					TOTAL ADD'L FEE		OR	TOTAL ADD'L FEE	

* If the entry in column 1 is less than the entry in column 2, write "0" in column 3.
** If the "Highest Number Previously Paid For" IN THIS SPACE is less than 20, enter "20".
*** If the "Highest Number Previously Paid For" IN THIS SPACE is less than 3, enter "3".
The "Highest Number Previously Paid For" (Total or Independent) is the highest number found in the appropriate box in column 1.

Legal Instrument Examiner:
/DEBORAH POLLARD/

This collection of information is required by 37 CFR 1.16. The information is required to obtain or retain a benefit by the public which is to file (and by the USPTO to process) an application. Confidentiality is governed by 35 U.S.C. 122 and 37 CFR 1.14. This collection is estimated to take 12 minutes to complete, including gathering, preparing, and submitting the completed application form to the USPTO. Time will vary depending upon the individual case. Any comments on the amount of time you require to complete this form and/or suggestions for reducing this burden, should be sent to the Chief Information Officer, U.S. Patent and Trademark Office, U.S. Department of Commerce, P.O. Box 1450, Alexandria, VA 22313-1450. DO NOT SEND FEES OR COMPLETED FORMS TO THIS ADDRESS. **SEND TO: Commissioner for Patents, P.O. Box 1450, Alexandria, VA 22313-1450.**
If you need assistance in completing the form, call 1-800-PTO-9199 and select option 2.

SitePro, Ex. 2006
TankLogix v. SitePro, IPR2025-00651

UNITED STATES PATENT AND TRADEMARK OFFICE

UNITED STATES DEPARTMENT OF COMMERCE
United States Patent and Trademark Office
Address: COMMISSIONER FOR PATENTS
P.O. Box 1450
Alexandria, Virginia 22313-1450
www.uspto.gov

APPLICATION NO.	FILING DATE	FIRST NAMED INVENTOR	ATTORNEY DOCKET NO.	CONFIRMATION NO.
12/794,898	06/07/2010	Francisco M. Gutierrez	GEDR-0005	9904

16025 7590 05/18/2012
Woodcock Washburn LLP/GE
2929 Arch Street
Circa Centre, 12th Floor
Philadelphia, PA 19104-2891

EXAMINER
GORDON, BRIAN R

ART UNIT	PAPER NUMBER
1773	

NOTIFICATION DATE	DELIVERY MODE
05/18/2012	ELECTRONIC

Please find below and/or attached an Office communication concerning this application or proceeding.

The time period for reply, if any, is set in the attached communication.

Notice of the Office communication was sent electronically on above-indicated "Notification Date" to the following e-mail address(es):

eofficemonitor@woodcock.com
GPO.mail@ge.com

Office Action Summary	Application No.	Applicant(s)	
	12/794,898	GUTIERREZ ET AL.	
	Examiner	Art Unit	
	BRIAN R. GORDON	1773	

-- The MAILING DATE of this communication appears on the cover sheet with the correspondence address --

Period for Reply

A SHORTENED STATUTORY PERIOD FOR REPLY IS SET TO EXPIRE 3 MONTH(S) OR THIRTY (30) DAYS, WHICHEVER IS LONGER, FROM THE MAILING DATE OF THIS COMMUNICATION.

- Extensions of time may be available under the provisions of 37 CFR 1.136(a). In no event, however, may a reply be timely filed after SIX (6) MONTHS from the mailing date of this communication.
- If NO period for reply is specified above, the maximum statutory period will apply and will expire SIX (6) MONTHS from the mailing date of this communication.
- Failure to reply within the set or extended period for reply will, by statute, cause the application to become ABANDONED (35 U.S.C. § 133). Any reply received by the Office later than three months after the mailing date of this communication, even if timely filed, may reduce any earned patent term adjustment. See 37 CFR 1.704(b).

Status

1)☒ Responsive to communication(s) filed on 5-9-12.

2a)☒ This action is **FINAL**. 2b)☐ This action is non-final.

3)☐ An election was made by the applicant in response to a restriction requirement set forth during the interview on _____; the restriction requirement and election have been incorporated into this action.

4)☐ Since this application is in condition for allowance except for formal matters, prosecution as to the merits is closed in accordance with the practice under *Ex parte Quayle*, 1935 C.D. 11, 453 O.G. 213.

Disposition of Claims

5)☒ Claim(s) 1-25 is/are pending in the application.

5a) Of the above claim(s) _____ is/are withdrawn from consideration.

6)☐ Claim(s) _____ is/are allowed.

7)☒ Claim(s) 1-25 is/are rejected.

8)☐ Claim(s) _____ is/are objected to.

9)☐ Claim(s) _____ are subject to restriction and/or election requirement.

Application Papers

10)☒ The specification is objected to by the Examiner.

11)☐ The drawing(s) filed on _____ is/are: a)☐ accepted or b)☐ objected to by the Examiner.

Applicant may not request that any objection to the drawing(s) be held in abeyance. See 37 CFR 1.85(a).

Replacement drawing sheet(s) including the correction is required if the drawing(s) is objected to. See 37 CFR 1.121(d).

12)☐ The oath or declaration is objected to by the Examiner. Note the attached Office Action or form PTO-152.

Priority under 35 U.S.C. § 119

13)☐ Acknowledgment is made of a claim for foreign priority under 35 U.S.C. § 119(a)-(d) or (f).

a)☐ All b)☐ Some * c)☐ None of:

1.☐ Certified copies of the priority documents have been received.

2.☐ Certified copies of the priority documents have been received in Application No. _____.

3.☐ Copies of the certified copies of the priority documents have been received in this National Stage application from the International Bureau (PCT Rule 17.2(a)).

* See the attached detailed Office action for a list of the certified copies not received.

Attachment(s)

1) ☒ Notice of References Cited (PTO-892)

2) ☐ Notice of Draftsperson's Patent Drawing Review (PTO-948)

3) ☒ Information Disclosure Statement(s) (PTO/SB/08) Paper No(s)/Mail Date _____.

4) ☐ Interview Summary (PTO-413) Paper No(s)/Mail Date. _____ .

5) ☐ Notice of Informal Patent Application

6) ☐ Other: _____.

DETAILED ACTION

Response to Arguments

1. Applicant's arguments, see remarks/amendments, filed May 9, 2012, with respect to the rejection(s) of claim(s) 1-25 have been fully considered and are persuasive. Therefore, the rejection has been withdrawn. However, upon further consideration, a new ground(s) of rejection is made in view of Greening et al., US 2009/0095351.

Claim Rejections - 35 USC § 102

2. Claims 1-25 are rejected under 35 U.S.C. 102(e) as anticipated by or, in the alternative, under 35 U.S.C. 103(a) as obvious over Greening et al., US 2009/0095351.

Greening et al. disclose a pipeline additive injection system including: an injection pump for injecting an amount of additive (anti-corrosion agent, anti-freeze agent, de-waxing agent) into a pipeline; a battery for powering the injection pump; system sensors to monitor system conditions; and a controller for retrieving system data from the system sensors and for controlling operation of the injection pump based on the system data to achieve additive injection compensation. (Abstract; paragraphs 0005-0007).

The system comprises a pipeline 10, tank 12 (chemical reservoir), a pump 14 in communication with pump motor 22, motor 22 controlled by controller 20, as by use of a relay 24 or other power regulator. Power supply 28 (power module) may for example include batteries 30, a power generator such as a solar panel 32, battery charger 34 and power output 35. Controller 20 may operate with sensors such as any or all of: a solar panel charging voltmeter 36, a battery voltage/quality indicator 37 such as an

SitePro, Ex. 2006
TankLogix v. SitePro, IPR2025-00651

analog battery voltage meter, a pipeline pressure sensor 38, a pipeline contents temperature sensor 40, a fluid level sensor 42 and a pump motor encoder 44. Controller 20 communicates with the sensors through connections 48 and wired or wireless communications 46a to 46f. As such, the controller effectively is able to determine operational data relating to any of the system conditions such as additive supply via sensor 42, power availability through voltmeter 34 and indicator 36, pipeline contents conditions such as flow pressure and temperature via sensors 38 and 40 and motor condition such as power usage or motor drive rotation speed (motor speed, drive frequency) applicable to injected additive volume metering, as by use of encoder 44 with or without considering fluid compressibility, pipeline and additive temperature, pipeline pressure and pump efficiency. (Figures 1 and 3; paragraphs 0023-0025).

Controller 20 may further communicate with external systems through a data communications system 50 (translator) and include a central processor 164 (central controller). System 50 may provide wired or wireless communications 52 for external control (i.e. remote computing device) of controller 20, and thereby the additive system as a whole, external data collection and/or may allow data collected by the controller to be sent to offsite systems, including a remote weather station (remote computing devices). (paragraph 0026 and 0037).

Data communications such as data transfer and external control inputs/outputs 152 can be achieved via data communication system 150. System 150 may include any communication protocols, as desired. For example, the system may support analog or digital communications including any or all communication protocols of CANBUS, IRDA,

RS485, etc. In one embodiment, for example, IRDA protocol may provide wireless (wireless signals) data transferring capabilities to allow uploads of data from memory even in a potentially hazardous environment. (transmission of commands via different communication protocols, paragraph 0030).

Figure 3, illustrates and embodiment with a plurality injection systems including a plurality of motors, pumps, and tanks including different injection fluids (anti-freeze, de-waxing, and anti-corrosion agents).

Greening et al. does not disclose refer to the elements by the same terms of the claims. For example, the offsite systems are not referenced as a remote computing device. However, it would have been inherent if not obvious to recognize such systems which may include a weather station that may be referenced as a remote computer/computing device.

The injection system of Greening is not classified as a hydrocarbon system. However, it obvious if inherently known that pipelines are employed for transporting hydrocarbons (crude oil, gas, fuel, etc.).

Conclusion

3. The prior art made of record and not relied upon is considered pertinent to applicant's disclosure. Sheldon; Michael L.; Thigpen; Brian L. et al.; Means; C. Mitch et al.; Shaw; Christopher Kempson et al.; and Kohl; Kristopher T. et al. disclose pipeline systems.

4. Applicant's amendment necessitated the new ground(s) of rejection presented in this Office action. Accordingly, **THIS ACTION IS MADE FINAL**. See MPEP

SitePro, Ex. 2006
TankLogix v. SitePro, IPR2025-00651

§ 706.07(a). Applicant is reminded of the extension of time policy as set forth in 37 CFR 1.136(a).

A shortened statutory period for reply to this final action is set to expire THREE MONTHS from the mailing date of this action. In the event a first reply is filed within TWO MONTHS of the mailing date of this final action and the advisory action is not mailed until after the end of the THREE-MONTH shortened statutory period, then the shortened statutory period will expire on the date the advisory action is mailed, and any extension fee pursuant to 37 CFR 1.136(a) will be calculated from the mailing date of the advisory action. In no event, however, will the statutory period for reply expire later than SIX MONTHS from the date of this final action.

Any inquiry concerning this communication or earlier communications from the examiner should be directed to BRIAN R. GORDON whose telephone number is (571)272-1258. The examiner can normally be reached on M-F, 1st Fri. Off.

If attempts to reach the examiner by telephone are unsuccessful, the examiner's supervisor, Jill Warden can be reached on 571-272-1267. The fax phone number for the organization where this application or proceeding is assigned is 571-273-8300.

SitePro, Ex. 2006
TankLogix v. SitePro, IPR2025-00651

Information regarding the status of an application may be obtained from the Patent Application Information Retrieval (PAIR) system. Status information for published applications may be obtained from either Private PAIR or Public PAIR. Status information for unpublished applications is available through Private PAIR only. For more information about the PAIR system, see http://pair-direct.uspto.gov. Should you have questions on access to the Private PAIR system, contact the Electronic Business Center (EBC) at 866-217-9197 (toll-free). If you would like assistance from a USPTO Customer Service Representative or access to the automated information system, call 800-786-9199 (IN USA OR CANADA) or 571-272-1000.

/BRIAN R GORDON/
Primary Examiner, Art Unit 1773

Notice of References Cited	Application/Control No. 12/794,898	Applicant(s)/Patent Under Reexamination GUTIERREZ ET AL.	
	Examiner BRIAN R. GORDON	Art Unit 1773	Page 1 of 1

U.S. PATENT DOCUMENTS

*		Document Number Country Code-Number-Kind Code	Date MM-YYYY	Name	Classification
*	A	US-2009/0095351	04-2009	GREENING et al.	137/3
*	B	US-7,878,250	02-2011	Sheldon, Michael L.	166/369
*	C	US-7,711,486	05-2010	Thigpen et al.	702/9
*	D	US-7,389,787	06-2008	Means et al.	137/13
*	E	US-7,234,524	06-2007	Shaw et al.	166/304
*	F	US-6,851,444	02-2005	Kohl et al.	137/13
	G	US-			
	H	US-			
	I	US-			
	J	US-			
	K	US-			
	L	US-			
	M	US-			

FOREIGN PATENT DOCUMENTS

*		Document Number Country Code-Number-Kind Code	Date MM-YYYY	Country	Name	Classification
	N					
	O					
	P					
	Q					
	R					
	S					
	T					

NON-PATENT DOCUMENTS

*		Include as applicable: Author, Title Date, Publisher, Edition or Volume, Pertinent Pages)
	U	
	V	
	W	
	X	

*A copy of this reference is not being furnished with this Office action. (See MPEP § 707.05(a).)
Dates in MM-YYYY format are publication dates. Classifications may be US or foreign.

Substitute for 1449/PTO **INFORMATION DISCLOSURE STATEMENT BY APPLICANT** *(use as many sheets as necessary)*				***Complete if Known***	
				Application Number	12/794,898
				Filing Date	June 7, 2010
				First Named Inventor	Francisco M. Gutierrez, et al.
				Art Unit	2837
				Examiner Name	Brian R Gordon
Sheet	1	of	2	**Attorney Docket Number**	GEDR-0005/255763-1

U. S. PUBLICATION AND PATENT DOCUMENTS

Examiner Initials	Cite No.	Document Number Number – Kind Code (if known)	Publication or Grant Date MM-DD-YYYY	Name of Patentee or Applicant of Cited Document
	1	2010/0304018 A1	12-02-2010	Achour et al
	2	4,196,169 A	04-01-1980	Gablin et al
	3	5,104,621 A	04-14-1992	Pfost
	4	5,108,703 A	04-28-1992	Pfost
	5	5,125,748 A	06-30-1992	Bjornson et al
	6	5,139,744 A	08-18-1992	Kowalski
	7	5,333,675 A	08-02-1994	Mullis
	8	5,411,065 A	05-02-1995	Meador
	9	5,428,470 A	06-27-1995	Labriola
	10	5,656,493 A	08-12-1997	Mullis
	11	5,772,963 A	06-30-1998	Cantatore
	12	5,908,599 A	06-01-1999	Behringer
	13	5,961,923 A	10-05-1999	Nova
	14	6,063,339 A	05-16-2000	Tisone et al
	15	6,093,574 A	07-25-2000	Druyor-Sanchez
	16	6,416,713 B1	07-09-2002	Ford
	17	6,644,848 B1	11-11-2003	Clayton et al
	18	7,378,058 B2	05-27-2008	Lemme
	19	7,815,871 B2	10-19-2010	Pamula
	20	7,939,017 B2	05-10-2011	Uffenheimer
	21	7,939,021 B2	05-10-2011	Smith
	22	7,939,584 B2	05-10-2011	Harris et al
	23	8,012,768 B2	09-06-2011	Jafari
	24	8,066,946 B2	11-29-2011	Redmond

Examiner Signature		**Date Considered**	

ALL REFERENCES CONSIDERED EXCEPT WHERE LINED THROUGH. /B.G./

SitePro, Ex. 2006
TankLogix v. SitePro, IPR2025-00651

Substitute for 1449/PTO				Complete if Known	
INFORMATION DISCLOSURE STATEMENT BY APPLICANT				**Application Number**	12/794,898
				Filing Date	June 7, 2010
				First Named Inventor	Francisco M. Gutierrez, et al.
				Art Unit	2837
(use as many sheets as necessary)				**Examiner Name**	Brian R Gordon
Sheet	2	of	2	**Attorney Docket Number**	GEDR-0005/255763-1

U. S. PUBLICATION AND PATENT DOCUMENTS				
Examiner Initials	Cite No.	Document Number Number – Kind Code (if known)	Publication or Grant Date MM-DD-YYYY	Name of Patentee or Applicant of Cited Document
	25	8,147,773 B2	04-03-2012	Lemme

Examiner Signature	/Brian Gordon/	**Date Considered**	05/15/2012

ALL REFERENCES CONSIDERED EXCEPT WHERE LINED THROUGH. /B.G./

SitePro, Ex. 2006
TankLogix v. SitePro, IPR2025-00651

Search Notes	Application/Control No.	Applicant(s)/Patent Under Reexamination
	12794898	GUTIERREZ ET AL.
	Examiner	**Art Unit**
	BRIAN R GORDON	1773

SEARCHED

Class	Subclass	Date	Examiner
436	43, 50, 55, 174, 180, 807	4-5-12	BG
422	62-63, 68.1, 81, 501, 505, 509, 105,, 107-108	4-5-12	BG
700	266	4-5-12	BG
137	3	5-14-12	BG

SEARCH NOTES

Search Notes	Date	Examiner
classes 436, 422 plus text search	4-4-12	BG
updated previous search; plus text search	5-14-12	BG

INTERFERENCE SEARCH

Class	Subclass	Date	Examiner

SitePro, Ex. 2006
TankLogix v. SitePro, IPR2025-00651

Index of Claims	Application/Control No.	Applicant(s)/Patent Under Reexamination
	12794898	GUTIERREZ ET AL.
	Examiner	**Art Unit**
	BRIAN R GORDON	1773

✓	Rejected	-	Cancelled	N	Non-Elected	A	Appeal
=	Allowed	÷	Restricted	I	Interference	O	Objected

☐ Claims renumbered in the same order as presented by applicant ☐ CPA ☐ T.D. ☐ R.1.47

CLAIM		DATE								
Final	Original	04/05/2012	05/15/2012							
	1	✓	✓							
	2	✓	✓							
	3	✓	✓							
	4	✓	✓							
	5	✓	✓							
	6	✓	✓							
	7	✓	✓							
	8	✓	✓							
	9	✓	✓							
	10	✓	✓							
	11	✓	✓							
	12	✓	✓							
	13	✓	✓							
	14	✓	✓							
	15	✓	✓							
	16	✓	✓							
	17	✓	✓							
	18	✓	✓							
	19	✓	✓							
	20	✓	✓							
	21	✓	✓							
	22	✓	✓							
	23	✓	✓							
	24	✓	✓							
	25	✓	✓							

PTO/SB/30EFS (07-09)
Approved for use through 07/31/2012. OMB 0651-0031
U.S. Patent and Trademark Office; U.S. DEPARTMENT OF COMMERCE
Under the Paperwork Reduction Act of 1995, no persons are required to respond to a collection of information unless it contains a valid OMB control number.

REQUEST FOR CONTINUED EXAMINATION(RCE)TRANSMITTAL
(Submitted Only via EFS-Web)

Application Number	12794898	Filing Date	2010-06-07	Docket Number (if applicable)	255763-1/GEDR-0005	Art Unit	1773
First Named Inventor	Francisco M. Gutierrez			Examiner Name	Gordon, Brian R.		

This is a Request for Continued Examination (RCE) under 37 CFR 1.114 of the above-identified application.
Request for Continued Examination (RCE) practice under 37 CFR 1.114 does not apply to any utility or plant application filed prior to June 8, 1995, or to any design application. The Instruction Sheet for this form is located at WWW.USPTO.GOV

SUBMISSION REQUIRED UNDER 37 CFR 1.114

Note: If the RCE is proper, any previously filed unentered amendments and amendments enclosed with the RCE will be entered in the order in which they were filed unless applicant instructs otherwise. If applicant does not wish to have any previously filed unentered amendment(s) entered, applicant must request non-entry of such amendment(s).

☐ Previously submitted. If a final Office action is outstanding, any amendments filed after the final Office action may be considered as a submission even if this box is not checked.

- ☐ Consider the arguments in the Appeal Brief or Reply Brief previously filed on _____
- ☐ Other _____

☒ Enclosed

- ☒ Amendment/Reply
- ☐ Information Disclosure Statement (IDS)
- ☐ Affidavit(s)/ Declaration(s)
- ☐ Other _____

MISCELLANEOUS

☐ Suspension of action on the above-identified application is requested under 37 CFR 1.103(c) for a period of months _____
(Period of suspension shall not exceed 3 months; Fee under 37 CFR 1.17(i) required)

☐ Other _____

FEES

☒ **The RCE fee under 37 CFR 1.17(e) is required by 37 CFR 1.114 when the RCE is filed.**
The Director is hereby authorized to charge any underpayment of fees, or credit any overpayments, to Deposit Account No 233050

SIGNATURE OF APPLICANT, ATTORNEY, OR AGENT REQUIRED

☒ Patent Practitioner Signature

☐ Applicant Signature

PTO/SB/30EFS (07-09)
Approved for use through 07/31/2012. OMB 0651-0031
U.S. Patent and Trademark Office; U.S. DEPARTMENT OF COMMERCE
Under the Paperwork Reduction Act of 1995, no persons are required to respond to a collection of information unless it contains a valid OMB control number.

Signature of Registered U.S. Patent Practitioner			
Signature	/Michael J. Kline/	Date (YYYY-MM-DD)	2012-06-26
Name	Michael J. Kline	Registration Number	31632

This collection of information is required by 37 CFR 1.114. The information is required to obtain or retain a benefit by the public which is to file (and by the USPTO to process) an application. Confidentiality is governed by 35 U.S.C. 122 and 37 CFR 1.11 and 1.14. This collection is estimated to take 12 minutes to complete, including gathering, preparing, and submitting the completed application form to the USPTO. Time will vary depending upon the individual case. Any comments on the amount of time you require to complete this form and/or suggestions for reducing this burden, should be sent to the Chief Information Officer, U.S. Patent and Trademark Office, U.S. Department of Commerce, P.O. Box 1450, Alexandria, VA 22313-1450.

If you need assistance in completing the form, call 1-800-PTO-9199 and select option 2.

Privacy Act Statement

The Privacy Act of 1974 (P.L. 93-579) requires that you be given certain information in connection with your submission of the attached form related to a patent application or patent. Accordingly, pursuant to the requirements of the Act, please be advised that: (1) the general authority for the collection of this information is 35 U.S.C. 2(b)(2); (2) furnishing of the information solicited is voluntary; and (3) the principal purpose for which the information is used by the U.S. Patent and Trademark Office is to process and/or examine your submission related to a patent application or patent. If you do not furnish the requested information, the U.S. Patent and Trademark Office may not be able to process and/or examine your submission, which may result in termination of proceedings or abandonment of the application or expiration of the patent.

The information provided by you in this form will be subject to the following routine uses:

1. The information on this form will be treated confidentially to the extent allowed under the Freedom of Information Act (5 U.S.C. 552) and the Privacy Act (5 U.S.C. 552a). Records from this system of records may be disclosed to the Department of Justice to determine whether the Freedom of Information Act requires disclosure of these records.

2. A record from this system of records may be disclosed, as a routine use, in the course of presenting evidence to a court, magistrate, or administrative tribunal, including disclosures to opposing counsel in the course of settlement negotiations.

3. A record in this system of records may be disclosed, as a routine use, to a Member of Congress submitting a request involving an individual, to whom the record pertains, when the individual has requested assistance from the Member with respect to the subject matter of the record.

4. A record in this system of records may be disclosed, as a routine use, to a contractor of the Agency having need for the information in order to perform a contract. Recipients of information shall be required to comply with the requirements of the Privacy Act of 1974, as amended, pursuant to 5 U.S.C. 552a(m).

5. A record related to an International Application filed under the Patent Cooperation Treaty in this system of records may be disclosed, as a routine use, to the International Bureau of the World Intellectual Property Organization, pursuant to the Patent Cooperation Treaty.

6. A record in this system of records may be disclosed, as a routine use, to another federal agency for purposes of National Security review (35 U.S.C. 181) and for review pursuant to the Atomic Energy Act (42 U.S.C. 218(c)).

7. A record from this system of records may be disclosed, as a routine use, to the Administrator, General Services, or his/her designee, during an inspection of records conducted by GSA as part of that agency's responsibility to recommend improvements in records management practices and programs, under authority of 44 U.S.C. 2904 and 2906. Such disclosure shall be made in accordance with the GSA regulations governing inspection of records for this purpose, and any other relevant (i.e., GSA or Commerce) directive. Such disclosure shall not be used to make determinations about individuals.

8. A record from this system of records may be disclosed, as a routine use, to the public after either publication of the application pursuant to 35 U.S.C. 122(b) or issuance of a patent pursuant to 35 U.S.C. 151. Further, a record may be disclosed, subject to the limitations of 37 CFR 1.14, as a routine use, to the public if the record was filed in an application which became abandoned or in which the proceedings were terminated and which application is referenced by either a published application, an application open to public inspections or an issued patent.

9. A record from this system of records may be disclosed, as a routine use, to a Federal, State, or local law enforcement agency, if the USPTO becomes aware of a violation or potential violation of law or regulation.

IN THE UNITED STATES PATENT AND TRADEMARK OFFICE

In re Application of: **Francisco M. Gutierrez et al**	**Confirmation No.: 9904**
Application No.: 12/794,898	**Group Art Unit: 1773**
Filing Date: June 7, 2010	**Examiner: Gordon, Brian R.**
For: CHEMICAL INJECTION SYSTEM	

Mail Stop AF
Commissioner for Patents
P.O. Box 1450
Alexandria, VA 22313-1450

Dear Commissioner:

REQUEST FOR CONTINUED EXAMINATION

In response to the Official Action dated **May 18, 2012**, reconsideration is respectfully requested in view of the amendments and/or remarks as indicated below:

☐ **Amendments to the Specification** begin on page of this paper.

☒ **Amendments to the Claims** are reflected in the listing of the claims which begins on page 2 of this paper.

☐ **Amendments to the Drawings** begin on page of this paper and include an attached replacement sheet.

☒ **Remarks** begin on page 9 of this paper.

☒ The Commissioner is hereby authorized to charge any fee deficiency, charge any additional fees, or credit any overpayment of fees, associated with this application in connection with this filing, or any future filing, submitted to the U.S. Patent and Trademark Office during the pendency of this application, to Deposit Account No. 23-3050.

SitePro, Ex. 2006
TankLogix v. SitePro, IPR2025-00651

This listing of claims will replace all prior versions, and listings, of claims in the application.

Listing of Claims:

1. (Currently amended) A method ~~for controlling a chemical injection system for a hydrocarbon transmission system~~ comprising:

monitoring a hydrocarbon stream in a hydrocarbon pipeline with a monitoring module in fluid communication with the hydrocarbon pipeline, the monitoring module comprising one or more sensor devices operable to detect one or more operational parameters of the hydrocarbon stream;

injecting one or more chemical fluids adapted to treat the hydrocarbon stream via one or more ~~providing a~~ chemical injection systems ~~system~~ in fluid communication with ~~a~~ the hydrocarbon pipeline; and~~, said chemical injection system comprising:~~

accounting for relative distances between the one or more chemical injection systems and the monitoring module, to provide a substantially uniformly consistent quantity of the one or more chemical fluids in the hydrocarbon pipeline

~~one or more chemical fluids adapted to treat a hydrocarbon stream being transmitted through said hydrocarbon transmission system;~~

~~a pump driven by a motor and in fluid communication with both a chemical reservoir containing said one or more chemical fluids and the hydrocarbon transmission system, the pump adapted to inject said one or more chemical fluids into the hydrocarbon transmission system;~~

~~a motor controller coupled to the motor and adapted to control operation of the motor; and~~

~~a central controller communicably coupled to the motor controller;~~

~~receiving an operational command at the chemical injection system in a first communication protocol from a remote computer;~~

~~translating, at the central controller, the operational command in the first communication protocol to an operational command in a second communication protocol different from the first communication protocol;~~

SitePro, Ex. 2006
TankLogix v. SitePro, IPR2025-00651

~~transmitting the operational command in the second communication protocol from the central controller to the motor controller; and~~

~~adjusting the motor controller to control the operation of the motor in response to receiving the operational command in the second communication protocol from the central controller~~.

2. (Cancelled)

3. (Cancelled)

4. (Currently amended) The method of claim 1 ~~3~~, wherein the one or more operational parameters comprise ~~parameter comprises~~ at least one of the following:

a fluidic pressure in the hydrocarbon transmission system;

a fluidic flow rate in the hydrocarbon transmission system;

a percentage concentration by weight or volume of the chemical fluid in the hydrocarbon transmission system;

an operational parameter of the motor;

a controller temperature;

a battery voltage;

a motor current;

a solar cell charge current; and

one or more fault conditions.

5. (Currently amended) The method of claim 1 ~~3~~, further comprising:

~~measuring the parameter with a sensor positioned in the hydrocarbon transmission system; and~~

SitePro, Ex. 2006
TankLogix v. SitePro, IPR2025-00651

wirelessly transmitting a signal representative of the one or more operational parameters ~~parameter~~ from the one or more sensor devices ~~sensor~~ to the one or more chemical injection ~~system~~ systems.

6. (Currently amended) The method of claim 1, wherein the one or more chemical fluids ~~are employed to treat a hydrocarbon stream being transmitted through said pipeline, and~~ comprise at least one of:

a corrosion inhibitor;

a paraffin inhibiter;

a demulsifier;

an ethanol; and

a foamer.

7. (Cancelled)

8. (Cancelled)

9. (Cancelled)

10. (Cancelled)

11. (Cancelled)

12. (Currently amended) A system, comprising:

a hydrocarbon pipeline containing a hydrocarbon stream;

a monitoring module comprising one or more sensor devices operable to detect one or more operational parameters of the hydrocarbon stream; and

SitePro, Ex. 2006
TankLogix v. SitePro, IPR2025-00651

one or more chemical injection systems in fluid communication with the hydrocarbon stream comprising a chemical reservoir containing a chemical fluid adapted to treat the hydrocarbon stream and configured to account for relative distances between the one or more chemical injection systems and the monitoring module, thereby providing a substantially uniformly consistent quantity of the one or more chemical fluids in the hydrocarbon pipeline

~~a pump in fluid communication with both the chemical reservoir and the pipeline;~~

~~a motor coupled to the pump and adapted to drive the pump to transfer the chemical fluid from the reservoir to the pipeline;~~

~~a power module;~~

~~a motor controller electrically coupled to the power module and the motor, the motor controller adapted to adjust a rotational speed of the motor;~~

~~a remote computing device; and~~

~~a central controller communicably coupled to the motor controller and the remote computing device, the central controller comprising a translator adapted to receive a signal from the remote computing device in a first communication protocol and translate the signal from the remote computing device to a command in a second communication protocol distinct from the first communication protocol, the command operable to adjust the motor controller to adjust the rotational speed of the motor~~.

13. (Cancelled)

14. (Cancelled)

15. (Cancelled)

16. (Cancelled)

17. (Cancelled)

18. (Cancelled)

19. (Cancelled)

20. (Cancelled)

21. (Currently amended) A system comprising:

a central controller communicably coupled to a motor controller;

a chemical reservoir containing a chemical fluid adapted to treat a hydrocarbon stream in a hydrocarbon transmission system comprising a hydrocarbon pipeline;

a monitoring module in fluid communication with the hydrocarbon pipeline, the monitoring module comprising one or more sensor devices operable to detect one or more operational parameters of the hydrocarbon stream;

a control center;

~~a remote computing system comprising a graphical user interface (GUI)~~;

~~a sensor coupled with the hydrocarbon transmission system;~~ and

a chemical injection system, comprising:

a pump in fluid communication with both the chemical reservoir and the hydrocarbon transmission system;

a motor coupled to the pump and adapted to drive the pump to transfer the chemical fluid from the reservoir to the hydrocarbon transmission system;

a power module adapted to receive solar power and convert the solar power to electrical power;

a motor controller electrically coupled to the power module and the motor, the motor controller adapted to adjust a rotational speed of the motor; and

a central controller communicably coupled to the motor controller, the central controller communicably coupled to the control center ~~remote computing system~~ and the one or more sensor devices ~~sensor~~, the central controller comprising a translator adapted to receive a

signal from the remote computing system in a first communication protocol and translate the signal from the remote computing system to a command in a second communication protocol distinct from the first communication protocol, the command operable to adjust the motor controller to adjust the rotational speed of the motor, the control center and/or the chemical injection system configured to account for a relative distance between the chemical injection system and the monitoring module, thereby providing a substantially uniformly consistent quantity of the chemical fluid in the hydrocarbon pipeline.

22. (Cancelled)

23. (Currently amended) The system of claim 21, further comprising a transceiver communicably coupled to the control center ~~remote computing station~~ through a communications network, the transceiver in wireless communication with the chemical injection system.

24. (Previously presented) The system of claim 23, further comprising one or more communication stations in wireless communication with the chemical injection system and the transceiver, each communication station adapted to relay operational parameters of the chemical injection system in the form of wireless signals between the transceiver and the chemical injection system.

25. (Cancelled)

26. (New) The method of claim 1 wherein accounting for the relative distances between the one or more chemical injection systems and the monitoring module is performed by a remote control center and/or the one or more chemical injection systems.

SitePro, Ex. 2006
TankLogix v. SitePro, IPR2025-00651

27. (New) The method of claim 1 wherein the hydrocarbon pipeline is in fluid communication with one or more hydrocarbon production sites.

28. (New) A chemical injection system, comprising:

a monitoring module comprising one or more sensor devices operable to detect one or more operational parameters of a hydrocarbon stream;

a remote control center in communication with the monitoring module; and

a chemical injection system in communication with the monitoring module and the remote control center, and containing a chemical fluid adapted to treat the hydrocarbon stream,

wherein the remote control center and/or the chemical injection system further comprise a processor configured to account for relative distances between the chemical injection system and the monitoring module, and the chemical injection system is operable to provide a substantially uniformly consistent quantity of the one or more chemical fluids to the hydrocarbon stream.

REMARKS

Status of the Claims

Claims 1-25 were presented with this application. All claims stand rejected. With this Request for Continued Examination, claims 1, 4-6, 12, 21, and 23 have been amended and claims 2, 3, 7-11, 13-20, 22, and 25 have been canceled. New claims 26-28 have been added. No new matter has been added. All claims are now believed to be in condition for allowance. Upon entry of this amendment, claims 1, 4-6, 12, 21, 23, 24, and 26-28 will be pending, of which claims 1, 12, 21, and 28 are independent.

Rejections under 35 U.S.C. §102

In the Final Office Action dated May 18, 2012 ("Office Action"), claims 1-25 were rejected under 35 U.S.C. §102(e) for allegedly being anticipated by or, in the alternative, under 35 U.S.C. §103(a) as obvious over U.S. Publication No. 2009/0095351 to *Greening et al.* ("*Greening*"). With this response, claims 1, 4-6, 12, 21, and 23 have been amended. In view of the amendments set forth above and the following remarks, that rejection is respectfully traversed and reconsideration is respectfully requested.

In the Office Action, the Examiner concedes that the injection system of *Greening* is not classified as a hydrocarbon system. Office Action, page 5. Indeed, *Greening* does not discuss hydrocarbon streams, hydrocarbon pipelines, or hydrocarbon production systems. Claims 1, and 4-6 have been amended to recite monitoring a "*hydrocarbon stream* in a *hydrocarbon pipeline*" with a "monitoring module in fluid communication with the *hydrocarbon pipeline*." Claim 12 has been amended to recite "a monitoring module comprising one or more sensor devices operable to detect one or more operational parameters of a *hydrocarbon stream*." Claims 21 and 23 have been amended to recite:

> *a monitoring module* in fluid communication with the *hydrocarbon pipeline*, the monitoring module comprising one or more sensor devices operable to detect one or more operational parameters of the *hydrocarbon stream*.

SitePro, Ex. 2006
TankLogix v. SitePro, IPR2025-00651

Support for these amendments is found in the as-filed application, e.g., at paragraphs [0053]-[0054] and FIG. 2. It is respectfully submitted that these amendments remove *Greening* as a 35 U.S.C. §102(e) and §103(a) reference.[1]

Additionally, claims 1, 4-6, 12, 21, and 23 have been amended to recite accounting for *"relative distances"* or "a relative distance between the one or more chemical injection systems and the monitoring module, *thereby providing a substantially uniformly consistent quantity of the one or more chemical fluids in the hydrocarbon pipeline*." Support for this amendment is found in the as-filed application, e.g., at paragraphs [0028] and [0055]. It is respectfully submitted that *Greening* fails to teach or suggest this novel feature, and the claims as amended are now believed to be allowable over the art of record.

Claims 4-6 are also believed to be patentable over the art of record, at least by virtue of their dependencies on allowable independent claim 1, as well as for their added features.

Claims 23 and 24 are also believed to be patentable over the art of record, at least by virtue of their dependencies on allowable independent claim 21, as well as for their added features.

New claim 26 recites that "accounting for the relative distances between the one or more chemical injection systems and the monitoring module is performed by a remote control center and/or the one or more chemical injection systems." Support for this new claim is found in the as-filed application, e.g., at paragraphs [0028] and [0055]. As *Greening* is not concerned with hydrocarbon pipelines, or accounting for relative distances between one or more chemical injection systems and a monitoring module, thereby providing a substantially uniformly

[1] A claim is anticipated only if each and every element as set forth in the claim is found, either expressly or inherently described, in a single prior art reference. *See, Verdegaal Bros. v. Union Oil Co. of California*, 814 F.2d 628, 631 (Fed. Cir. 1987); M.P.E.P. § 2131. The identical invention must be shown in as complete detail as is contained in the claim. *See, Richardson v. Suzuki Motor Co.*, 868 F.2d 1226, 1236 (Fed. Cir. 1989).

consistent quantity of one or more chemical fluids in a hydrocarbon pipeline, it is respectfully submitted that new claim 26 is allowable over the art of record.

New claim 27 recites that "the hydrocarbon pipeline is in fluid communication with one or more *hydrocarbon production sites*." Support for this new claim is found in the as-filed application, e.g., at paragraphs [0028] and [0055]. As *Greening* is not concerned with hydrocarbon production sites, or accounting for relative distances between one or more chemical injection systems and a monitoring module, thereby providing a substantially uniformly consistent quantity of one or more chemical fluids in a hydrocarbon pipeline, it is respectfully submitted that new claim 27 is allowable over the art of record.

New claim 28 recites:

> a monitoring module comprising one or more sensor devices operable to detect one or more operational parameters of a hydrocarbon stream;
> a remote control center in communication with the monitoring module; and
> a chemical injection system in communication with the monitoring module and the remote control center, and containing a chemical fluid adapted to treat the hydrocarbon stream,
> wherein the remote control center and/or the chemical injection system further comprise a processor configured to account for relative distances between the chemical injection system and the monitoring module, and the chemical injection system is operable to provide a substantially uniformly consistent quantity of the one or more chemical fluids to the hydrocarbon stream.

Support for this new claim is found in the as-filed application, e.g., at paragraphs [0028] and [0053]-[0055] and FIGS. 1 and 2. As *Greening* is not concerned with hydrocarbon streams, or accounting for relative distances between one or more chemical injection systems and a monitoring module, thereby providing a substantially uniformly consistent quantity of one or more chemical fluids in a hydrocarbon stream, it is respectfully submitted that new claim 28 is allowable over the art of record.

CONCLUSION

In view of the foregoing amendments and remarks, the undersigned respectfully submits that the present application is in condition for allowance. A Notice of Allowance is respectfully requested.

While various distinctions may have been noted with respect to the cited reference, there may be other limitations in the pending claims that are also distinguishable over the cited reference. Applicant therefore reserves all rights and arguments with respect to all such other limitations and distinctions not expressly noted above.

Should the Examiner deem that any further action is necessary to place this application in even better form for allowance, the Examiner is encouraged to contact Applicant's undersigned representative at the below listed telephone number.

Date: June 26, 2012

/Michael J. Kline/
Michael J. Kline
Registration No. 31,632

Woodcock Washburn LLP
Cira Centre
2929 Arch Street, 12th Floor
Philadelphia, PA 19104-2891
Telephone: (215) 568-3100
Facsimile: (215) 568-3439

SitePro, Ex. 2006
TankLogix v. SitePro, IPR2025-00651

Electronic Patent Application Fee Transmittal

Application Number:	12794898
Filing Date:	07-Jun-2010
Title of Invention:	Chemical Injection System
First Named Inventor/Applicant Name:	Francisco M. Gutierrez
Filer:	Michael J. Kline/Ricki Moss
Attorney Docket Number:	GEDR-0005

Filed as Large Entity

Utility under 35 USC 111(a) Filing Fees

Description	Fee Code	Quantity	Amount	Sub-Total in USD($)
Basic Filing:				
Pages:				
Claims:				
Independent claims in excess of 3	1201	1	250	250
Miscellaneous-Filing:				
Petition:				
Patent-Appeals-and-Interference:				
Post-Allowance-and-Post-Issuance:				
Extension-of-Time:				

SitePro, Ex. 2006
TankLogix v. SitePro, IPR2025-00651

Description	Fee Code	Quantity	Amount	Sub-Total in USD($)
Miscellaneous:				
Request for continued examination	1801	1	930	930
		Total in USD ($)		**1180**

SitePro, Ex. 2006
TankLogix v. SitePro, IPR2025-00651

Electronic Acknowledgement Receipt

EFS ID:	13109872
Application Number:	12794898
International Application Number:	
Confirmation Number:	9904
Title of Invention:	Chemical Injection System
First Named Inventor/Applicant Name:	Francisco M. Gutierrez
Customer Number:	16025
Filer:	Michael J. Kline/Ricki Moss
Filer Authorized By:	Michael J. Kline
Attorney Docket Number:	GEDR-0005
Receipt Date:	26-JUN-2012
Filing Date:	07-JUN-2010
Time Stamp:	16:26:20
Application Type:	Utility under 35 USC 111(a)

Payment information:

Submitted with Payment	yes
Payment Type	Deposit Account
Payment was successfully received in RAM	$1180
RAM confirmation Number	3598
Deposit Account	233050
Authorized User	

The Director of the USPTO is hereby authorized to charge indicated fees and credit any overpayment as follows:

Charge any Additional Fees required under 37 C.F.R. Section 1.16 (National application filing, search, and examination fees)

Charge any Additional Fees required under 37 C.F.R. Section 1.17 (Patent application and reexamination processing fees)

SitePro, Ex. 2006
TankLogix v. SitePro, IPR2025-00651

Charge any Additional Fees required under 37 C.F.R. Section 1.19 (Document supply fees)

Charge any Additional Fees required under 37 C.F.R. Section 1.20 (Post Issuance fees)

Charge any Additional Fees required under 37 C.F.R. Section 1.21 (Miscellaneous fees and charges)

File Listing:

Document Number	Document Description	File Name	File Size(Bytes)/ Message Digest	Multi Part /.zip	Pages (if appl.)
1	Request for Continued Examination (RCE)	2557631_GEDR0005_RCE_06262012.PDF	79497 402bc2ddb37a26bdd5a3e80180787e53fa75ceb3	no	3
Warnings:					
This is not a USPTO supplied RCE SB30 form.					
Information:					
2		2557631_GEDR0005_RESPONSE_06262012.PDF	140188 14738831344dc4b3875c7e02f89c3e8840854266	yes	12

Multipart Description/PDF files in .zip description

Document Description	Start	End
Amendment Submitted/Entered with Filing of CPA/RCE	1	1
Claims	2	8
Applicant Arguments/Remarks Made in an Amendment	9	12

Warnings:					
Information:					
3	Fee Worksheet (SB06)	fee-info.pdf	31764 ddac0e21c0855369a098e82f98a087c9bf709136	no	2
Warnings:					
Information:					
			Total Files Size (in bytes):	251449	

SitePro, Ex. 2006
TankLogix v. SitePro, IPR2025-00651

This Acknowledgement Receipt evidences receipt on the noted date by the USPTO of the indicated documents, characterized by the applicant, and including page counts, where applicable. It serves as evidence of receipt similar to a Post Card, as described in MPEP 503.

New Applications Under 35 U.S.C. 111
If a new application is being filed and the application includes the necessary components for a filing date (see 37 CFR 1.53(b)-(d) and MPEP 506), a Filing Receipt (37 CFR 1.54) will be issued in due course and the date shown on this Acknowledgement Receipt will establish the filing date of the application.

National Stage of an International Application under 35 U.S.C. 371
If a timely submission to enter the national stage of an international application is compliant with the conditions of 35 U.S.C. 371 and other applicable requirements a Form PCT/DO/EO/903 indicating acceptance of the application as a national stage submission under 35 U.S.C. 371 will be issued in addition to the Filing Receipt, in due course.

New International Application Filed with the USPTO as a Receiving Office
If a new international application is being filed and the international application includes the necessary components for an international filing date (see PCT Article 11 and MPEP 1810), a Notification of the International Application Number and of the International Filing Date (Form PCT/RO/105) will be issued in due course, subject to prescriptions concerning national security, and the date shown on this Acknowledgement Receipt will establish the international filing date of the application.

SitePro, Ex. 2006
TankLogix v. SitePro, IPR2025-00651

PTO/SB/06 (07-06)
Approved for use through 1/31/2007. OMB 0651-0032
U.S. Patent and Trademark Office; U.S. DEPARTMENT OF COMMERCE
Under the Paperwork Reduction Act of 1995, no persons are required to respond to a collection of information unless it displays a valid OMB control number.

PATENT APPLICATION FEE DETERMINATION RECORD

Substitute for Form PTO-875

Application or Docket Number	Filing Date	☐ To be Mailed
12/794,898	06/07/2010	

APPLICATION AS FILED – PART I

FOR	(Column 1) NUMBER FILED	(Column 2) NUMBER EXTRA	SMALL ENTITY ☐ RATE ($)	SMALL ENTITY FEE ($)	OR	OTHER THAN SMALL ENTITY RATE ($)	OTHER THAN SMALL ENTITY FEE ($)
☐ BASIC FEE (37 CFR 1.16(a), (b), or (c))	N/A	N/A	N/A			N/A	
☐ SEARCH FEE (37 CFR 1.16(k), (i), or (m))	N/A	N/A	N/A			N/A	
☐ EXAMINATION FEE (37 CFR 1.16(o), (p), or (q))	N/A	N/A	N/A			N/A	
TOTAL CLAIMS (37 CFR 1.16(i))	minus 20 =	*	X $ =		OR	X $ =	
INDEPENDENT CLAIMS (37 CFR 1.16(h))	minus 3 =	*	X $ =			X $ =	
☐ APPLICATION SIZE FEE (37 CFR 1.16(s))	If the specification and drawings exceed 100 sheets of paper, the application size fee due is $250 ($125 for small entity) for each additional 50 sheets or fraction thereof. See 35 U.S.C. 41(a)(1)(G) and 37 CFR 1.16(s).						
☐ MULTIPLE DEPENDENT CLAIM PRESENT (37 CFR 1.16(j))							
* If the difference in column 1 is less than zero, enter "0" in column 2.			TOTAL			TOTAL	

APPLICATION AS AMENDED – PART II

AMENDMENT 06/26/2012	(Column 1) CLAIMS REMAINING AFTER AMENDMENT		(Column 2) HIGHEST NUMBER PREVIOUSLY PAID FOR	(Column 3) PRESENT EXTRA	SMALL ENTITY RATE ($)	SMALL ENTITY ADDITIONAL FEE ($)	OR	OTHER THAN SMALL ENTITY RATE ($)	OTHER THAN SMALL ENTITY ADDITIONAL FEE ($)
Total (37 CFR 1.16(i))	* 11	Minus	** 20	= 0	X $ =		OR	X $60=	0
Independent (37 CFR 1.16(h))	* 4	Minus	***3	= 1	X $ =		OR	X $250=	250
☐ Application Size Fee (37 CFR 1.16(s))									
☐ FIRST PRESENTATION OF MULTIPLE DEPENDENT CLAIM (37 CFR 1.16(j))							OR		
					TOTAL ADD'L FEE		OR	TOTAL ADD'L FEE	250

AMENDMENT	(Column 1) CLAIMS REMAINING AFTER AMENDMENT		(Column 2) HIGHEST NUMBER PREVIOUSLY PAID FOR	(Column 3) PRESENT EXTRA	RATE ($)	ADDITIONAL FEE ($)	OR	RATE ($)	ADDITIONAL FEE ($)
Total (37 CFR 1.16(i))	*	Minus	**	=	X $ =		OR	X $ =	
Independent (37 CFR 1.16(h))	*	Minus	***	=	X $ =		OR	X $ =	
☐ Application Size Fee (37 CFR 1.16(s))									
☐ FIRST PRESENTATION OF MULTIPLE DEPENDENT CLAIM (37 CFR 1.16(j))							OR		
					TOTAL ADD'L FEE		OR	TOTAL ADD'L FEE	

* If the entry in column 1 is less than the entry in column 2, write "0" in column 3.
** If the "Highest Number Previously Paid For" IN THIS SPACE is less than 20, enter "20".
*** If the "Highest Number Previously Paid For" IN THIS SPACE is less than 3, enter "3".
The "Highest Number Previously Paid For" (Total or Independent) is the highest number found in the appropriate box in column 1.

Legal Instrument Examiner:
/JOSEPH BROOKS/

This collection of information is required by 37 CFR 1.16. The information is required to obtain or retain a benefit by the public which is to file (and by the USPTO to process) an application. Confidentiality is governed by 35 U.S.C. 122 and 37 CFR 1.14. This collection is estimated to take 12 minutes to complete, including gathering, preparing, and submitting the completed application form to the USPTO. Time will vary depending upon the individual case. Any comments on the amount of time you require to complete this form and/or suggestions for reducing this burden, should be sent to the Chief Information Officer, U.S. Patent and Trademark Office, U.S. Department of Commerce, P.O. Box 1450, Alexandria, VA 22313-1450. DO NOT SEND FEES OR COMPLETED FORMS TO THIS ADDRESS. **SEND TO: Commissioner for Patents, P.O. Box 1450, Alexandria, VA 22313-1450.**
If you need assistance in completing the form, call 1-800-PTO-9199 and select option 2.

SitePro, Ex. 2006
TankLogix v. SitePro, IPR2025-00651

PTO/SB/81 (01-09)
Approved for use through 11/30/2011. OMB 0651-0035
U.S. Patent and Trademark Office; U.S. DEPARTMENT OF COMMERCE
Under the Paperwork Reduction Act of 1995, no persons are required to respond to a collection of information unless it displays a valid OMB control number.

POWER OF ATTORNEY OR REVOCATION OF POWER OF ATTORNEY WITH A NEW POWER OF ATTORNEY AND CHANGE OF CORRESPONDENCE ADDRESS

Application Number	12/794,898
Filing Date	06/07/2010
First Named Inventor	Francisco M. Gutierrez
Title	CHEMICAL INJECTION SYSTEM
Art Unit	1773
Examiner Name	Gordon, Brian R.
Attorney Docket Number	255763; 3060861 US01

I hereby revoke all previous powers of attorney given in the above-identified application.

☐ A Power of Attorney is submitted herewith.

OR

☒ I hereby appoint Practitioner(s) associated with the following Customer Number as my/our attorney(s) or agent(s) to prosecute the application identified above, and to transact all business in the United States Patent and Trademark Office connected therewith:

13090

OR

☐ I hereby appoint Practitioner(s) named below as my/our attorney(s) or agent(s) to prosecute the application identified above, and to transact all business in the United States Patent and Trademark Office connected therewith:

Practitioner(s) Name	Registration Number

Please recognize or change the correspondence address for the above-identified application to:

☒ The address associated with the above-mentioned Customer Number.

OR

☐ The address associated with Customer Number:

OR

☐ Firm or Individual Name					
Address					
City		State		Zip	
Country					
Telephone		Email			

I am the:

☐ Applicant/Inventor.

OR

☒ Assignee of record of the entire interest. See 37 CFR 3.71.
Statement under 37 CFR 3.73(b) (Form PTO/SB/96) submitted herewith or filed on _____.

SIGNATURE of Applicant or Assignee of Record

Signature	/jet50352/	Date	April 22, 2013
Name	Jonathan E. Thomas	Telephone	713-395-9889
Title and Company	Senior Counsel, Dresser Inc.		

NOTE: Signatures of all the inventors or assignees of record of the entire interest or their representative(s) are required. Submit multiple forms if more than one signature is required, see below*.

☒ *Total of 1 forms are submitted.

This collection of information is required by 37 CFR 1.31, 1.32 and 1.33. The information is required to obtain or retain a benefit by the public which is to file (and by the USPTO to process) an application. Confidentiality is governed by 35 U.S.C. 122 and 37 CFR 1.11 and 1.14. This collection is estimated to take 3 minutes to complete, including gathering, preparing, and submitting the completed application form to the USPTO. Time will vary depending upon the individual case. Any comments on the amount of time you require to complete this form and/or suggestions for reducing this burden, should be sent to the Chief Information Officer, U.S. Patent and Trademark Office, U.S. Department of Commerce, P.O. Box 1450, Alexandria, VA 22313-1450. DO NOT SEND FEES OR COMPLETED FORMS TO THIS ADDRESS. **SEND TO: Commissioner for Patents, P.O. Box 1450, Alexandria, VA 22313-1450.**

If you need assistance in completing the form, call 1-800-PTO-9199 and select option 2.

SitePro, Ex. 2006
TankLogix v. SitePro, IPR2025-00651

Privacy Act Statement

The Privacy Act of 1974 (P.L. 93-579) requires that you be given certain information in connection with your submission of the attached form related to a patent application or patent. Accordingly, pursuant to the requirements of the Act, please be advised that: (1) the general authority for the collection of this information is 35 U.S.C. 2(b)(2); (2) furnishing of the information solicited is voluntary; and (3) the principal purpose for which the information is used by the U.S. Patent and Trademark Office is to process and/or examine your submission related to a patent application or patent. If you do not furnish the requested information, the U.S. Patent and Trademark Office may not be able to process and/or examine your submission, which may result in termination of proceedings or abandonment of the application or expiration of the patent.

The information provided by you in this form will be subject to the following routine uses:

1. The information on this form will be treated confidentially to the extent allowed under the Freedom of Information Act (5 U.S.C. 552) and the Privacy Act (5 U.S.C 552a). Records from this system of records may be disclosed to the Department of Justice to determine whether disclosure of these records is required by the Freedom of Information Act.
2. A record from this system of records may be disclosed, as a routine use, in the course of presenting evidence to a court, magistrate, or administrative tribunal, including disclosures to opposing counsel in the course of settlement negotiations.
3. A record in this system of records may be disclosed, as a routine use, to a Member of Congress submitting a request involving an individual, to whom the record pertains, when the individual has requested assistance from the Member with respect to the subject matter of the record.
4. A record in this system of records may be disclosed, as a routine use, to a contractor of the Agency having need for the information in order to perform a contract. Recipients of information shall be required to comply with the requirements of the Privacy Act of 1974, as amended, pursuant to 5 U.S.C. 552a(m).
5. A record related to an International Application filed under the Patent Cooperation Treaty in this system of records may be disclosed, as a routine use, to the International Bureau of the World Intellectual Property Organization, pursuant to the Patent Cooperation Treaty.
6. A record in this system of records may be disclosed, as a routine use, to another federal agency for purposes of National Security review (35 U.S.C. 181) and for review pursuant to the Atomic Energy Act (42 U.S.C. 218(c)).
7. A record from this system of records may be disclosed, as a routine use, to the Administrator, General Services, or his/her designee, during an inspection of records conducted by GSA as part of that agency's responsibility to recommend improvements in records management practices and programs, under authority of 44 U.S.C. 2904 and 2906. Such disclosure shall be made in accordance with the GSA regulations governing inspection of records for this purpose, and any other relevant (i.e., GSA or Commerce) directive. Such disclosure shall not be used to make determinations about individuals.
8. A record from this system of records may be disclosed, as a routine use, to the public after either publication of the application pursuant to 35 U.S.C. 122(b) or issuance of a patent pursuant to 35 U.S.C. 151. Further, a record may be disclosed, subject to the limitations of 37 CFR 1.14, as a routine use, to the public if the record was filed in an application which became abandoned or in which the proceedings were terminated and which application is referenced by either a published application, an application open to public inspection or an issued patent.
9. A record from this system of records may be disclosed, as a routine use, to a Federal, State, or local law enforcement agency, if the USPTO becomes aware of a violation or potential violation of law or regulation.

SitePro, Ex. 2006
TankLogix v. SitePro, IPR2025-00651

PTO/SB/96 (07-09)
Approved for use through 07/31/2012. OMB 0651-0031
U.S. Patent and Trademark Office; U.S. DEPARTMENT OF COMMERCE
Under the Paperwork Reduction Act of 1995, no persons are required to respond to a collection of information unless it displays a valid OMB control number.

STATEMENT UNDER 37 CFR 3.73(b)

Applicant/Patent Owner: Dresser Inc.

Application No./Patent No.: 12/794,898 Filed/Issue Date: 06/07/2010

Titled: CHEMICAL INJECTION SYSTEM

Dresser Inc., a Corporation
(Name of Assignee) (Type of Assignee, e.g., corporation, partnership, university, government agency, etc.)

states that it is:

1. [x] the assignee of the entire right, title, and interest in;

2. [ ] an assignee of less than the entire right, title, and interest in
(The extent (by percentage) of its ownership interest is _____ %); or

3. [ ] the assignee of an undivided interest in the entirety of (a complete assignment from one of the joint inventors was made)

the patent application/patent identified above, by virtue of either:

A. [x] An assignment from the inventor(s) of the patent application/patent identified above. The assignment was recorded in the United States Patent and Trademark Office at Reel 025775, Frame 0610, or for which a copy therefore is attached.

OR

B. [ ] A chain of title from the inventor(s), of the patent application/patent identified above, to the current assignee as follows:

1. From: _____ To: _____
The document was recorded in the United States Patent and Trademark Office at
Reel _____, Frame _____, or for which a copy thereof is attached.

2. From: _____ To: _____
The document was recorded in the United States Patent and Trademark Office at
Reel _____, Frame _____, or for which a copy thereof is attached.

3. From: _____ To: _____
The document was recorded in the United States Patent and Trademark Office at
Reel _____, Frame _____, or for which a copy thereof is attached.

[ ] Additional documents in the chain of title are listed on a supplemental sheet(s).

[ ] As required by 37 CFR 3.73(b)(1)(i), the documentary evidence of the chain of title from the original owner to the assignee was, or concurrently is being, submitted for recordation pursuant to 37 CFR 3.11.

[NOTE: A separate copy (*i.e.*, a true copy of the original assignment document(s)) must be submitted to Assignment Division in accordance with 37 CFR Part 3, to record the assignment in the records of the USPTO. See MPEP 302.08]

The undersigned (whose title is supplied below) is authorized to act on behalf of the assignee.

/jet50352/ April 22, 2013
Signature Date

Jonathan E. Thomas Senior Counsel
Printed or Typed Name Title

This collection of information is required by 37 CFR 3.73(b). The information is required to obtain or retain a benefit by the public which is to file (and by the USPTO to process) an application. Confidentiality is governed by 35 U.S.C. 122 and 37 CFR 1.11 and 1.14. This collection is estimated to take 12 minutes to complete, including gathering, preparing, and submitting the completed application form to the USPTO. Time will vary depending upon the individual case. Any comments on the amount of time you require to complete this form and/or suggestions for reducing this burden, should be sent to the Chief Information Officer, U.S. Patent and Trademark Office, U.S. Department of Commerce, P.O. Box 1450, Alexandria, VA 22313-1450. DO NOT SEND FEES OR COMPLETED FORMS TO THIS ADDRESS. **SEND TO: Commissioner for Patents, P.O. Box 1450, Alexandria, VA 22313-1450.**

If you need assistance in completing the form, call 1-800-PTO-9199 and select option 2.
SitePro, Ex. 2006
TankLogix v. SitePro, IPR2025-00651

Privacy Act Statement

The **Privacy Act of 1974 (P.L. 93-579)** requires that you be given certain information in connection with your submission of the attached form related to a patent application or patent. Accordingly, pursuant to the requirements of the Act, please be advised that: (1) the general authority for the collection of this information is 35 U.S.C. 2(b)(2); (2) furnishing of the information solicited is voluntary; and (3) the principal purpose for which the information is used by the U.S. Patent and Trademark Office is to process and/or examine your submission related to a patent application or patent. If you do not furnish the requested information, the U.S. Patent and Trademark Office may not be able to process and/or examine your submission, which may result in termination of proceedings or abandonment of the application or expiration of the patent.

The information provided by you in this form will be subject to the following routine uses:

1. The information on this form will be treated confidentially to the extent allowed under the Freedom of Information Act (5 U.S.C. 552) and the Privacy Act (5 U.S.C 552a). Records from this system of records may be disclosed to the Department of Justice to determine whether disclosure of these records is required by the Freedom of Information Act.
2. A record from this system of records may be disclosed, as a routine use, in the course of presenting evidence to a court, magistrate, or administrative tribunal, including disclosures to opposing counsel in the course of settlement negotiations.
3. A record in this system of records may be disclosed, as a routine use, to a Member of Congress submitting a request involving an individual, to whom the record pertains, when the individual has requested assistance from the Member with respect to the subject matter of the record.
4. A record in this system of records may be disclosed, as a routine use, to a contractor of the Agency having need for the information in order to perform a contract. Recipients of information shall be required to comply with the requirements of the Privacy Act of 1974, as amended, pursuant to 5 U.S.C. 552a(m).
5. A record related to an International Application filed under the Patent Cooperation Treaty in this system of records may be disclosed, as a routine use, to the International Bureau of the World Intellectual Property Organization, pursuant to the Patent Cooperation Treaty.
6. A record in this system of records may be disclosed, as a routine use, to another federal agency for purposes of National Security review (35 U.S.C. 181) and for review pursuant to the Atomic Energy Act (42 U.S.C. 218(c)).
7. A record from this system of records may be disclosed, as a routine use, to the Administrator, General Services, or his/her designee, during an inspection of records conducted by GSA as part of that agency's responsibility to recommend improvements in records management practices and programs, under authority of 44 U.S.C. 2904 and 2906. Such disclosure shall be made in accordance with the GSA regulations governing inspection of records for this purpose, and any other relevant (*i.e.*, GSA or Commerce) directive. Such disclosure shall not be used to make determinations about individuals.
8. A record from this system of records may be disclosed, as a routine use, to the public after either publication of the application pursuant to 35 U.S.C. 122(b) or issuance of a patent pursuant to 35 U.S.C. 151. Further, a record may be disclosed, subject to the limitations of 37 CFR 1.14, as a routine use, to the public if the record was filed in an application which became abandoned or in which the proceedings were terminated and which application is referenced by either a published application, an application open to public inspection or an issued patent.
9. A record from this system of records may be disclosed, as a routine use, to a Federal, State, or local law enforcement agency, if the USPTO becomes aware of a violation or potential violation of law or regulation.

SitePro, Ex. 2006
TankLogix v. SitePro, IPR2025-00651

Electronic Acknowledgement Receipt

EFS ID:	15573456
Application Number:	12794898
International Application Number:	
Confirmation Number:	9904
Title of Invention:	Chemical Injection System
First Named Inventor/Applicant Name:	Francisco M. Gutierrez
Customer Number:	16025
Filer:	Michael J. Wasco/Danielle Menzies
Filer Authorized By:	Michael J. Wasco
Attorney Docket Number:	GEDR-0005
Receipt Date:	22-APR-2013
Filing Date:	07-JUN-2010
Time Stamp:	11:12:19
Application Type:	Utility under 35 USC 111(a)

Payment information:

Submitted with Payment	no

File Listing:

Document Number	Document Description	File Name	File Size(Bytes)/ Message Digest	Multi Part /.zip	Pages (if appl.)
1	Miscellaneous Incoming Letter	Transmittal.pdf	128539 d9e0f5d162140b6875be0772b0fff74df31520a7	no	1

Warnings:

Information:

SitePro, Ex. 2006
TankLogix v. SitePro, IPR2025-00651

2	Power of Attorney	POA.pdf	105452 4916a91ef62f15bc337a7abf03a90010e0fb5f8f	no	2
Warnings:					
Information:					
3	Assignee showing of ownership per 37 CFR 3.73.	Statement.pdf	110339 0dd8ceca672af5c4b641be6dfe4da1c9f3892a05	no	2
Warnings:					
Information:					
			Total Files Size (in bytes):	344330	

This Acknowledgement Receipt evidences receipt on the noted date by the USPTO of the indicated documents, characterized by the applicant, and including page counts, where applicable. It serves as evidence of receipt similar to a Post Card, as described in MPEP 503.

New Applications Under 35 U.S.C. 111
If a new application is being filed and the application includes the necessary components for a filing date (see 37 CFR 1.53(b)-(d) and MPEP 506), a Filing Receipt (37 CFR 1.54) will be issued in due course and the date shown on this Acknowledgement Receipt will establish the filing date of the application.

National Stage of an International Application under 35 U.S.C. 371
If a timely submission to enter the national stage of an international application is compliant with the conditions of 35 U.S.C. 371 and other applicable requirements a Form PCT/DO/EO/903 indicating acceptance of the application as a national stage submission under 35 U.S.C. 371 will be issued in addition to the Filing Receipt, in due course.

New International Application Filed with the USPTO as a Receiving Office
If a new international application is being filed and the international application includes the necessary components for an international filing date (see PCT Article 11 and MPEP 1810), a Notification of the International Application Number and of the International Filing Date (Form PCT/RO/105) will be issued in due course, subject to prescriptions concerning national security, and the date shown on this Acknowledgement Receipt will establish the international filing date of the application.

SitePro, Ex. 2006
TankLogix v. SitePro, IPR2025-00651

PTO/SB/21 (01-08)
Approved for use through 03/31/2008. OMB 0651-0031
U.S. Patent and Trademark Office; U.S. DEPARTMENT OF COMMERCE
Under the Paperwork Reduction Act of 1995, no persons are required to respond to a collection of information unless it displays a valid OMB control number.

TRANSMITTAL FORM

(to be used for all correspondence after initial filing)

Total Number of Pages in This Submission	3

Application Number	12/794,898 – Conf. # 9904
Filing Date	June 7, 2010
First Named Inventor	Francisco M. Gutierrez
Art Unit	1773
Examiner Name	Gordon, Brian R.
Attorney Docket Number	255763; 3060861US01

ENCLOSURES (*Check all that apply*)

- [ ] Fee Transmittal Form
  - [ ] Fee Attached
- [ ] Amendment/Reply
  - [ ] After Final
  - [ ] Affidavits/declaration(s)
- [ ] Extension of Time Request
- [ ] Express Abandonment Request
- [ ] Information Disclosure Statement
- [ ] Certified Copy of Priority Document(s)
- [ ] Reply to Missing Parts/ Incomplete Application
  - [ ] Reply to Missing Parts under 37 CFR 1.52 or 1.53
- [ ] Drawing(s)
- [ ] Licensing-related Papers
- [ ] Petition
- [ ] Petition to Convert to a Provisional Application
- [x] Power of Attorney, Revocation Change of Correspondence Address
- [ ] Terminal Disclaimer
- [ ] Request for Refund
- [ ] CD, Number of CD(s) _____
  - [ ] Landscape Table on CD
- [ ] After Allowance Communication to TC
- [ ] Appeal Communication to Board of Appeals and Interferences
- [ ] Appeal Communication to TC **(Appeal Notice, Brief, Reply Brief)**
- [ ] Proprietary Information
- [ ] Status Letter
- [x] Other Enclosure(s) (please Identify below):

Statement Under 37 CFR 3.73(b)
1 page

Remarks

SIGNATURE OF APPLICANT, ATTORNEY, OR AGENT

Firm Name	HISCOCK & BARCLAY LLP		
Signature	/Michael J .Wasco/		
Printed name	Michael J .Wasco		
Date	April 22, 2013	Reg. No.	58,919

Transmittal

I hereby certify that this paper (along with any paper referred to as being attached or enclosed) is being transmitted via the Office electronic filing system in accordance with § 1.6(a)(4).

Dated: April 22, 2013 Electronic Signature for Danielle Menzies: /Danielle Menzies/

SitePro, Ex. 2006
TankLogix v. SitePro, IPR2025-00651

UNITED STATES PATENT AND TRADEMARK OFFICE

UNITED STATES DEPARTMENT OF COMMERCE
United States Patent and Trademark Office
Address: COMMISSIONER FOR PATENTS
P.O. Box 1450
Alexandria, Virginia 22313-1450
www.uspto.gov

APPLICATION NUMBER	FILING OR 371(C) DATE	FIRST NAMED APPLICANT	ATTY. DOCKET NO./TITLE
12/794,898	06/07/2010	Francisco M. Gutierrez	GEDR-0005

CONFIRMATION NO. 9904

POWER OF ATTORNEY NOTICE

16025
Woodcock Washburn LLP/GE
2929 Arch Street
Circa Centre, 12th Floor
Philadelphia, PA 19104-2891

OC000000060705097

Date Mailed: 04/29/2013

NOTICE REGARDING CHANGE OF POWER OF ATTORNEY

This is in response to the Power of Attorney filed 04/22/2013.

- The Power of Attorney to you in this application has been revoked by the assignee who has intervened as provided by 37 CFR 3.71. Future correspondence will be mailed to the new address of record(37 CFR 1.33).

/ttkim/

Office of Data Management, Application Assistance Unit (571) 272-4000, or (571) 272-4200, or 1-888-786-0101

SitePro, Ex. 2006
TankLogix v. SitePro, IPR2025-00651

UNITED STATES PATENT AND TRADEMARK OFFICE

UNITED STATES DEPARTMENT OF COMMERCE
United States Patent and Trademark Office
Address: COMMISSIONER FOR PATENTS
P.O. Box 1450
Alexandria, Virginia 22313-1450
www.uspto.gov

APPLICATION NUMBER	FILING OR 371(C) DATE	FIRST NAMED APPLICANT	ATTY. DOCKET NO./TITLE
12/794,898	06/07/2010	Francisco M. Gutierrez	255763; 3060861 US01

CONFIRMATION NO. 9904

13090
Hiscock & Barclay LLP/GE
300 South State Street
Syracuse, NY 13202

POA ACCEPTANCE LETTER

OC000000060705099

Date Mailed: 04/29/2013

NOTICE OF ACCEPTANCE OF POWER OF ATTORNEY

This is in response to the Power of Attorney filed 04/22/2013.

The Power of Attorney in this application is accepted. Correspondence in this application will be mailed to the above address as provided by 37 CFR 1.33.

/ttkim/

Office of Data Management, Application Assistance Unit (571) 272-4000, or (571) 272-4200, or 1-888-786-0101

SitePro, Ex. 2006
TankLogix v. SitePro, IPR2025-00651

UNITED STATES PATENT AND TRADEMARK OFFICE

UNITED STATES DEPARTMENT OF COMMERCE
United States Patent and Trademark Office
Address: COMMISSIONER FOR PATENTS
P.O. Box 1450
Alexandria, Virginia 22313-1450
www.uspto.gov

APPLICATION NO.	FILING DATE	FIRST NAMED INVENTOR	ATTORNEY DOCKET NO.	CONFIRMATION NO.
12/794,898	06/07/2010	Francisco M. Gutierrez	255763; 3060861 US01	9904

13090 7590 07/30/2014
Hiscock & Barclay LLP/GE
300 South State Street
Syracuse, NY 13202

EXAMINER
GORDON, BRIAN R

ART UNIT	PAPER NUMBER
1773	

NOTIFICATION DATE	DELIVERY MODE
07/30/2014	ELECTRONIC

Please find below and/or attached an Office communication concerning this application or proceeding.

The time period for reply, if any, is set in the attached communication.

Notice of the Office communication was sent electronically on above-indicated "Notification Date" to the following e-mail address(es):

IPDocket@hblaw.com

Office Action Summary	Application No. 12/794,898	Applicant(s) GUTIERREZ ET AL.	
	Examiner BRIAN R. GORDON	Art Unit 1773	AIA (First Inventor to File) Status No

-- The MAILING DATE of this communication appears on the cover sheet with the correspondence address --

Period for Reply

A SHORTENED STATUTORY PERIOD FOR REPLY IS SET TO EXPIRE 3 MONTHS FROM THE MAILING DATE OF THIS COMMUNICATION.

- Extensions of time may be available under the provisions of 37 CFR 1.136(a). In no event, however, may a reply be timely filed after SIX (6) MONTHS from the mailing date of this communication.
- If NO period for reply is specified above, the maximum statutory period will apply and will expire SIX (6) MONTHS from the mailing date of this communication.
- Failure to reply within the set or extended period for reply will, by statute, cause the application to become ABANDONED (35 U.S.C. § 133). Any reply received by the Office later than three months after the mailing date of this communication, even if timely filed, may reduce any earned patent term adjustment. See 37 CFR 1.704(b).

Status

1)☒ Responsive to communication(s) filed on 6-26-12.

☐ A declaration(s)/affidavit(s) under **37 CFR 1.130(b)** was/were filed on _____.

2a)☒ This action is **FINAL**. 2b)☐ This action is non-final.

3)☐ An election was made by the applicant in response to a restriction requirement set forth during the interview on _____; the restriction requirement and election have been incorporated into this action.

4)☐ Since this application is in condition for allowance except for formal matters, prosecution as to the merits is closed in accordance with the practice under *Ex parte Quayle*, 1935 C.D. 11, 453 O.G. 213.

Disposition of Claims*

5)☒ Claim(s) 1,4-6,12,21,23,24 and 26-28 is/are pending in the application.

5a) Of the above claim(s) 1,4-6,12 and 26-28 is/are withdrawn from consideration.

6)☐ Claim(s) _____ is/are allowed.

7)☒ Claim(s) 21, 23-24 is/are rejected.

8)☐ Claim(s) _____ is/are objected to.

9)☐ Claim(s) _____ are subject to restriction and/or election requirement.

* If any claims have been determined allowable, you may be eligible to benefit from the **Patent Prosecution Highway** program at a participating intellectual property office for the corresponding application. For more information, please see http://www.uspto.gov/patents/init_events/pph/index.jsp or send an inquiry to PPHfeedback@uspto.gov.

Application Papers

10)☐ The specification is objected to by the Examiner.

11)☐ The drawing(s) filed on _____ is/are: a)☐ accepted or b)☐ objected to by the Examiner.

Applicant may not request that any objection to the drawing(s) be held in abeyance. See 37 CFR 1.85(a).

Replacement drawing sheet(s) including the correction is required if the drawing(s) is objected to. See 37 CFR 1.121(d).

Priority under 35 U.S.C. § 119

12)☐ Acknowledgment is made of a claim for foreign priority under 35 U.S.C. § 119(a)-(d) or (f).

Certified copies:

a)☐ All b)☐ Some** c)☐ None of the:

1.☐ Certified copies of the priority documents have been received.

2.☐ Certified copies of the priority documents have been received in Application No. _____.

3.☐ Copies of the certified copies of the priority documents have been received in this National Stage application from the International Bureau (PCT Rule 17.2(a)).

** See the attached detailed Office action for a list of the certified copies not received.

Attachment(s)

1) ☐ Notice of References Cited (PTO-892)

2) ☐ Information Disclosure Statement(s) (PTO/SB/08a and/or PTO/SB/08b) Paper No(s)/Mail Date _____.

3) ☐ Interview Summary (PTO-413) Paper No(s)/Mail Date. _____ .

4) ☐ Other: _____.

SitePro, Ex. 2006
TankLogix v. SitePro, IPR2025-00651

1. The present application is being examined under the pre-AIA first to invent provisions.

DETAILED ACTION

Continued Examination Under 37 CFR 1.114

2. A request for continued examination under 37 CFR 1.114, including the fee set forth in 37 CFR 1.17(e), was filed in this application after final rejection. Since this application is eligible for continued examination under 37 CFR 1.114, and the fee set forth in 37 CFR 1.17(e) has been timely paid, the finality of the previous Office action has been withdrawn pursuant to 37 CFR 1.114. Applicant's submission filed on June 26, 2012 has been entered.

Election/Restrictions

3. Newly submitted claims 1, 4-6, 12, and 26-28 directed to an invention that is independent or distinct from the invention originally claimed for the following reasons: Applicant has amended the claims extensively, such that the claims are directed to different inventions, not previously considered/searched. For example, amended claim 1 is directed to a different method than that previously examined such that all of the steps of the method are completely new and the method does not require the specificity of the previously required structural components. Amended claim 12 and new claim 28 are directed to systems different from that previously examined. Had the claims been present in the originally filed application, the claims would have been restricted.

Since applicant has received an action on the merits for the originally presented invention, this invention has been constructively elected by original presentation for

SitePro, Ex. 2006
TankLogix v. SitePro, IPR2025-00651

prosecution on the merits. Accordingly, claims 1, 4-6, 12, 26-28 are withdrawn from consideration as being directed to a non-elected invention. See 37 CFR 1.142(b) and MPEP § 821.03.

Response to Arguments

4. Applicant's arguments filed June 26, 2012 have been fully considered but they are not persuasive. Applicant asserts that since claim 21 has been amended to recite “a monitoring module in fluid communication with the hydrocarbon pipeline, the monitoring module comprising one or more sensor devices operable to detect one or more operational parameters of the hydrocarbon stream” that the claim is allowable. The examiner disagrees. It is noted that claim 21 does not list or positively claim a hydrocarbon transmissions system comprising a hydrocarbon pipeline with a flowing hydrocarbon steam as an element(s) of the invention. The element is merely mentioned in the "adapted to" phrase which provides for an intended/possible use of the chemical fluid. If applicant intends for the hydrocarbon transmission system be considered a required element of the invention, the claim should clearly reflect such. As presently, drafted the hydrocarbon transmission system, hydrocarbon pipeline, and hydrocarbon stream are not listed as elements of the invention.

Applicant asserts that examiner stated that: “[i]n the Office Action, the Examiner concedes that the injection system of Greening is not classified as a hydrocarbon system. Office Action, page 5.” The examiner presumes applicant is referring to the third full paragraph of page 4. It is noted that the immediate sentence following the statement

SitePro, Ex. 2006
TankLogix v. SitePro, IPR2025-00651

says: “[h]owever, it obvious if inherently known that pipelines are employed for transporting hydrocarbons (crude oil, gas, fuel, etc.).”

Thus, indicating that absence of the employment of the term “hydrocarbon" does not preclude the reference from being applicable and that the use of a pipeline for transporting conventionally and commonly, known hydrocarbon streams was not a nonobvious and novel at the time of the invention.

Since the hydrocarbon transmission system is not positively claimed as an element, it is not required that the prior art disclose such. However, even if the hydrocarbons transmission system comprising a hydrocarbon pipeline containing a hydrocarbon stream were positively claimed as elements of the invention the Greening reference would remain applicable.

The Applicant is advised that the Supreme Court recently clarified that a claim can be proved obvious merely by showing that the combination of known elements was obvious to try. In this regard, the Supreme Court explained that, “[w]hen there is a design need or market pressure to solve a problem and there are a finite number of identified, predictable solutions, a person of ordinary skill in the art has a good reason to pursue the known options within his or her technical grasp.” An obviousness determination is not the result of a rigid formula disassociated from the consideration of the facts of the case. Indeed, the common sense of those skilled in the art demonstrates why some combinations would have been obvious where others would not. The combination of familiar elements is likely to be obvious when it does no more than yield predictable results. Furthermore, the simple substitution of one known element for

another is likely to be obvious when predictable results are achieved. See *KSR Int'l v. Teleflex Inc.*, 127 Sup. Ct. 1727, 1742, 82 USPQ2d 1385, 1397 (2007) (see MPEP § 2143).

Greening et al. is directed to injecting additives to a stream within a **pipeline**, the method comprising: providing an additive injection system; **monitoring pipeline**, environmental and system conditions to obtain representative data; and further steps. The term pipeline is convention known by definition art as a long tubular conduit or series of pipes, often underground, that may include pumps and valves for flow control, used to materials such as transport crude oil (hydrocarbons), natural gas (hydrocarbons), petroleum (hydrocarbon), fuel (hydrocarbon) etc., especially over great distances.

Thus, as previously stated, even if a hydrocarbon transmission system including a pipeline was positively claimed as an element, the element would be found inherent or at minimum nonobvious in view of the teachings of Greening et al.

As accounting for a relative distance, it is noted that applicant's claim does not even establish that there is any distance required to between the monitoring module (sensor) and chemical ejection system. There is nothing precluding sensors from also being located at substantially the same location as the chemical ejection system. If so, there would be no need to account for any relative distance. It is also noted that applicant's specification does not provide any specific explanation of how or why such a distance would even be an issue for injecting substances within a pipeline. Furthermore, in the age of “real-time”, “live” monitoring and the ability of signals to be transmitted

essentially instantly, that any distance would be negligible and not a factor that would affect the accuracy of the monitoring and injections.

However, it is noted that Greening does disclose that various sensors for determining different parameters, conditions are employed for monitoring the pipeline and injecting additives in response to such monitoring. For example, the reference states The controller may include any or all of: a real time clock for time based monitoring, a temperature sensor for temperature monitoring, communications device for receiving temperature/weather data including real time and/or forecasted data, pipeline fluid content sensors for pipeline fluid conditions including water content, presence of corrosive fluids, vibration sensors for monitoring pipeline conditions, etc. (paragraph 0012).

The controller may also or alternatively control additive injection based on power usage criteria, including power availability, motor rotation (to detect low power conditions), etc. This may allow power management, which may be useful in battery or solar powered systems where power consumption may be considered with respect to temperature, amount of daylight, cloudy days, the time of the year, battery or motor function. This being useful to protect battery life, avoid battery failure and, for example, to consider the availability of recharging conditions for solar (i.e. appropriately handle the occurrence of cloudy days or long nights, etc.) (paragraph 0013). As noted above, there is essentially no need to account for distance in the age of real-time, live, monitoring, however, in the various parameters employed by Greening the examiner asserts that distance between sensors and the control center or chemical ejection

system would be inherently or obviously accounted for. For example, in the forecast or monitoring weather at a different pipeline location (distance) than the controller accounts for the distance between the locations.

Accounting for such distance (and various other factors), would have been inherent, and if not inherent well within the common sense and routine skill of one of ordinary skill in the art at the time of the invention.

Claim Rejections - 35 USC § 112

5. The following is a quotation of 35 U.S.C. 112(b):
(b) CONCLUSION.—The specification shall conclude with one or more claims particularly pointing out and distinctly claiming the subject matter which the inventor or a joint inventor regards as the invention.

The following is a quotation of 35 U.S.C. 112 (pre-AIA), second paragraph:
The specification shall conclude with one or more claims particularly pointing out and distinctly claiming the subject matter which the applicant regards as his invention.

6. Claims 21 rejected under 35 U.S.C. 112(b) or 35 U.S.C. 112 (pre-AIA), second paragraph, as being indefinite for failing to particularly point out and distinctly claim the subject matter which the inventor or a joint inventor, or for pre-AIA the applicant regards as the invention.

As to claim 21 it is unclear if the motor controller of the phrase “coupled to a motor controller” in line 2 is intended to claimed as an element of the invention. It is noted that merely stating that an element is "coupled/connected to" another object (that has not been previously positively claimed/listed separately as an element of the invention) does not clearly establish intent for the object to also be considered as a positively claimed element.

As noted above in the "a hydrocarbon stream...a hydrocarbon transmission system, and a hydrocarbon pipe line" have not been listed/positively claimed as elements of the invention. Thus, it is unclear how the phrase “a monitoring module in fluid communication with the hydrocarbon pipeline" further limits the invention. It is unclear if applicant intends for the hydrocarbon transmission system, pipeline, and stream are intended be required elements of the invention rather than merely other objects that may be used with or operated on by the invention.

It is unclear if the "a central controller" listed as the first element in line 2 is the same or different from the "a central controller” listed as the last element of the claim. It is unclear if the “a motor” in line 2 the same or different from the “a motor” listed as an element after the “a pump”.

It is unclear which “central controller” is being reference by the phrase “the central controller” employed in the claim.

Claim 21 recites the limitation "translator adapted to receive a signal from the remote computing system" in the last paragraph (line 1, page 7 of amendment). There is insufficient antecedent basis for this limitation in the claim. No remote computing system has been previously positively claimed as an element of the invention.

It is noted that the term “and/or” in the last paragraph of claim 21 is redundant. It is interpreted as "or".

As to claim 23, it is unclear if the “a communications network” is intended be a required element of the invention or merely a structure that is used along with the invention.

SitePro, Ex. 2006
TankLogix v. SitePro, IPR2025-00651

7. The following is a quotation of the first paragraph of 35 U.S.C. 112(a):

> (a) IN GENERAL.—The specification shall contain a written description of the invention, and of the manner and process of making and using it, in such full, clear, concise, and exact terms as to enable any person skilled in the art to which it pertains, or with which it is most nearly connected, to make and use the same, and shall set forth the best mode contemplated by the inventor or joint inventor of carrying out the invention.

The following is a quotation of the first paragraph of pre-AIA 35 U.S.C. 112:

> The specification shall contain a written description of the invention, and of the manner and process of making and using it, in such full, clear, concise, and exact terms as to enable any person skilled in the art to which it pertains, or with which it is most nearly connected, to make and use the same, and shall set forth the best mode contemplated by the inventor of carrying out his invention.

8. Claims 21 and 23-24 rejected under 35 U.S.C. 112(a) or 35 U.S.C. 112 (pre-AIA), first paragraph, because the specification, while being enabling for a chemical injection system comprising a central controller communicably coupled to the motor controller and remote computing device; and a chemical injection system capable of account for relative distances between production sites and pipeline monitoring locations in order to efficiently inject chemical additives into the system without waste, does not reasonably provide enablement for two separate central controllers as claimed along with the other elements and a control center that is configured to account for a relative distance as recited in the claims. The specification does not enable any person skilled in the art to which it pertains, or with which it is most nearly connected, to make or use the invention commensurate in scope with these claims. There is no description of a control center of a system being configured as recited in the claim.

Claim Rejections - 35 USC § 102

9. Claims 21 and 23-24 are rejected under 35 U.S.C. 102(e) as anticipated by or, in the alternative, under 35 U.S.C. 103(a) as obvious over Greening et al., US 2009/0095351.

Greening et al. disclose a pipeline additive injection system including: an injection pump for injecting an amount of additive (anti-corrosion agent, anti-freeze agent, de-waxing agent) into a pipeline; a battery for powering the injection pump; system sensors to monitor system conditions; and a controller for retrieving system data from the system sensors and for controlling operation of the injection pump based on the system data to achieve additive injection compensation. (Abstract; paragraphs 0005-0007).

The system comprises a pipeline 10, tank 12 (chemical reservoir), a pump 14 in communication with pump motor 22, motor 22 controlled by controller 20, as by use of a relay 24 or other power regulator. Power supply 28 (power module) may for example include batteries 30, a power generator such as a solar panel 32, battery charger 34 and power output 35. Controller 20 may operate with sensors such as any or all of: a solar panel charging voltmeter 36, a battery voltage/quality indicator 37 such as an analog battery voltage meter, a pipeline pressure sensor 38, a pipeline contents temperature sensor 40, a fluid level sensor 42 and a pump motor encoder 44. Controller 20 communicates with the sensors through connections 48 and wired or wireless communications 46a to 46f. As such, the controller effectively is able to determine operational data relating to any of the system conditions such as additive supply via

sensor 42, power availability through voltmeter 34 and indicator 36, pipeline contents conditions such as flow pressure and temperature via sensors 38 and 40 and motor condition such as power usage or motor drive rotation speed (motor speed, drive frequency) applicable to injected additive volume metering, as by use of encoder 44 with or without considering fluid compressibility, pipeline and additive temperature, pipeline pressure and pump efficiency. (Figures 1 and 3; paragraphs 0023-0025).

Controller 20 may further communicate with external systems through a data communications system 50 (translator) and include a central processor 164 (central controller). System 50 may provide wired or wireless communications 52 for external control (i.e. remote computing device) of controller 20, and thereby the additive system as a whole, external data collection and/or may allow data collected by the controller to be sent to offsite systems, including a remote weather station (remote computing devices). (paragraph 0026 and 0037).

Data communications such as data transfer and external control inputs/outputs 152 can be achieved via data communication system 150. System 150 may include any communication protocols, as desired. For example, the system may support analog or digital communications including any or all communication protocols of CANBUS, IRDA, RS485, etc. In one embodiment, for example, IRDA protocol may provide wireless (wireless signals) data transferring capabilities to allow uploads of data from memory even in a potentially hazardous environment. (transmission of commands via different communication protocols, paragraph 0030).

Figure 3, illustrates and embodiment with a plurality injection systems including a plurality of motors, pumps, and tanks including different injection fluids (anti-freeze, de-waxing, and anti-corrosion agents).

Greening et al. does not disclose refer to the elements by the same terms of the claims. For example, the offsite systems are not referenced as a remote computing device. However, it would have been inherent if not obvious to recognize such systems which may include a weather station that may be referenced as a remote computer/computing device.

The injection system of Greening is not classified as a hydrocarbon system. However, it obvious if inherently known that pipelines are employed for transporting hydrocarbons (crude oil, gas, fuel, etc.).

The Applicant is advised that the Supreme Court recently clarified that a claim can be proved obvious merely by showing that the combination of known elements was obvious to try. In this regard, the Supreme Court explained that, "[w]hen there is a design need or market pressure to solve a problem and there are a finite number of identified, predictable solutions, a person of ordinary skill in the art has a good reason to pursue the known options within his or her technical grasp." An obviousness determination is not the result of a rigid formula disassociated from the consideration of the facts of the case. Indeed, the common sense of those skilled in the art demonstrates why some combinations would have been obvious where others would not. The combination of familiar elements is likely to be obvious when it does no more than yield predictable results. Furthermore, the simple substitution of one known element for

another is likely to be obvious when predictable results are achieved. See *KSR Int'l v. Teleflex Inc.*, 127 Sup. Ct. 1727, 1742, 82 USPQ2d 1385, 1397 (2007) (see MPEP § 2143).

As to accounting for a relative distance between a monitoring module (sensor) and chemical injection system, it is noted that Greening does disclose that various sensors for determining different parameters, conditions (in which such distance would be directly or indirectly accounted for) are employed for monitoring the pipeline and injecting additives in response to such monitoring. (see paragraphs 0012-13; See Response to Arguments).

Accounting for such distance (and various other factors), would have been inherent, and if not inherent well within the common sense and routine skill of one of ordinary skill in the art at the time of the invention.

Conclusion

10. All claims are drawn to the same invention claimed in the application prior to the entry of the submission under 37 CFR 1.114 and could have been finally rejected on the grounds and art of record in the next Office action if they had been entered in the application prior to entry under 37 CFR 1.114. Accordingly, **THIS ACTION IS MADE FINAL** even though it is a first action after the filing of a request for continued examination and the submission under 37 CFR 1.114. See MPEP § 706.07(b). Applicant is reminded of the extension of time policy as set forth in 37 CFR 1.136(a).

SitePro, Ex. 2006
TankLogix v. SitePro, IPR2025-00651

A shortened statutory period for reply to this final action is set to expire THREE MONTHS from the mailing date of this action. In the event a first reply is filed within TWO MONTHS of the mailing date of this final action and the advisory action is not mailed until after the end of the THREE-MONTH shortened statutory period, then the shortened statutory period will expire on the date the advisory action is mailed, and any extension fee pursuant to 37 CFR 1.136(a) will be calculated from the mailing date of the advisory action. In no event, however, will the statutory period for reply expire later than SIX MONTHS from the mailing date of this final action.

Any inquiry concerning this communication or earlier communications from the examiner should be directed to BRIAN R. GORDON whose telephone number is (571)272-1258. The examiner can normally be reached on M-F, 1st Fri. Off.

If attempts to reach the examiner by telephone are unsuccessful, the examiner's supervisor, Jill Warden can be reached on 571-272-1267. The fax phone number for the organization where this application or proceeding is assigned is 571-273-8300.

Information regarding the status of an application may be obtained from the Patent Application Information Retrieval (PAIR) system. Status information for published applications may be obtained from either Private PAIR or Public PAIR. Status information for unpublished applications is available through Private PAIR only. For more information about the PAIR system, see http://pair-direct.uspto.gov. Should you have questions on access to the Private PAIR system, contact the Electronic Business Center (EBC) at 866-217-9197 (toll-free). If you would like assistance from a USPTO Customer Service Representative or access to the automated information system, call 800-786-9199 (IN USA OR CANADA) or 571-272-1000.

/BRIAN R GORDON/
Primary Examiner, Art Unit 1773

Search Notes	Application/Control No.	Applicant(s)/Patent Under Reexamination
	12794898	GUTIERREZ ET AL.
	Examiner	**Art Unit**
	BRIAN R GORDON	1773

CPC- SEARCHED

Symbol	Date	Examiner
F17D 3/01,, 3/12, 3/18; G05D 11/138	7-25-14	BG

CPC COMBINATION SETS - SEARCHED

Symbol	Date	Examiner

US CLASSIFICATION SEARCHED

Class	Subclass	Date	Examiner
436	43, 50, 55, 174, 180, 807	4-5-12	BG
422	62-63, 68.1, 81, 501, 505, 509, 105,, 107-108	4-5-12	BG
700	266	4-5-12	BG
137	3	5-14-12	BG
436	28-29, 40	7-24-14	BG

SEARCH NOTES

Search Notes	Date	Examiner
classes 436, 422 plus text search	4-4-12	BG
updated previous search; plus text search	5-14-12	BG

INTERFERENCE SEARCH

US Class/ CPC Symbol	US Subclass / CPC Group	Date	Examiner

	/BRIAN R GORDON/ Primary Examiner, Art Unit 1773

SitePro, Ex. 2006
TankLogix v. SitePro, IPR2025-00651

PTO/SB/80 (11-08)
Approved for use through 11/30/2011. OMB 0651-0035
U.S. Patent and Trademark Office; U.S. DEPARTMENT OF COMMERCE
Under the Paperwork Reduction Act of 1995, no persons are required to respond to a collection of information unless it displays a valid OMB control number.

POWER OF ATTORNEY TO PROSECUTE APPLICATIONS BEFORE THE USPTO

I hereby revoke all previous powers of attorney given in the application identified in the attached statement under 37 CFR 3.73(b).

I hereby appoint:

☑ Practitioners associated with the Customer Number: 125443

OR

☐ Practitioner(s) named below (if more than ten patent practitioners are to be named, then a customer number must be used):

Name	Registration Number	Name	Registration Number

as attorney(s) or agent(s) to represent the undersigned before the United States Patent and Trademark Office (USPTO) in connection with any and all patent applications assigned only to the undersigned according to the USPTO assignment records or assignment documents attached to this form in accordance with 37 CFR 3.73(b).

Please change the correspondence address for the application identified in the attached statement under 37 CFR 3.73(b) to:

☑ The address associated with Customer Number: 125443

OR

☐ Firm or Individual Name			
Address			
City		State	Zip
Country			
Telephone		Email	

Assignee Name and Address:

Dresser Inc.
15455 Dallas Parkway, 11th Floor, Millennium 1
Addison, TX 75001

A copy of this form, together with a statement under 37 CFR 3.73(b) (Form PTO/SB/96 or equivalent) is required to be filed in each application in which this form is used. The statement under 37 CFR 3.73(b) may be completed by one of the practitioners appointed in this form if the appointed practitioner is authorized to act on behalf of the assignee, and must identify the application in which this Power of Attorney is to be filed.

SIGNATURE of Assignee of Record

The individual whose signature and title is supplied below is authorized to act on behalf of the assignee

Signature	/jet50352/	Date	August 7, 2014
Name	Jonathan E. Thomas	Telephone	713.395.9889
Title	Senior Counsel Intellectual Property, Dresser Inc.		

This collection of information is required by 37 CFR 1.31, 1.32 and 1.33. The information is required to obtain or retain a benefit by the public which is to file (and by the USPTO to process) an application. Confidentiality is governed by 35 U.S.C. 122 and 37 CFR 1.11 and 1.14. This collection is estimated to take 3 minutes to complete, including gathering, preparing, and submitting the completed application form to the USPTO. Time will vary depending upon the individual case. Any comments on the amount of time you require to complete this form and/or suggestions for reducing this burden, should be sent to the Chief Information Officer, U.S. Patent and Trademark Office, U.S. Department of Commerce, P.O. Box 1450, Alexandria, VA 22313-1450. DO NOT SEND FEES OR COMPLETED FORMS TO THIS ADDRESS. **SEND TO: Commissioner for Patents, P.O. Box 1450, Alexandria, VA 22313-1450.**

If you need assistance in completing the form, call 1-800-PTO-9199 and select option 2.

SitePro, Ex. 2006
TankLogix v. SitePro, IPR2025-00651

Privacy Act Statement

The **Privacy Act of 1974 (P.L. 93-579)** requires that you be given certain information in connection with your submission of the attached form related to a patent application or patent. Accordingly, pursuant to the requirements of the Act, please be advised that: (1) the general authority for the collection of this information is 35 U.S.C. 2(b)(2); (2) furnishing of the information solicited is voluntary; and (3) the principal purpose for which the information is used by the U.S. Patent and Trademark Office is to process and/or examine your submission related to a patent application or patent. If you do not furnish the requested information, the U.S. Patent and Trademark Office may not be able to process and/or examine your submission, which may result in termination of proceedings or abandonment of the application or expiration of the patent.

The information provided by you in this form will be subject to the following routine uses:

1. The information on this form will be treated confidentially to the extent allowed under the Freedom of Information Act (5 U.S.C. 552) and the Privacy Act (5 U.S.C 552a). Records from this system of records may be disclosed to the Department of Justice to determine whether disclosure of these records is required by the Freedom of Information Act.
2. A record from this system of records may be disclosed, as a routine use, in the course of presenting evidence to a court, magistrate, or administrative tribunal, including disclosures to opposing counsel in the course of settlement negotiations.
3. A record in this system of records may be disclosed, as a routine use, to a Member of Congress submitting a request involving an individual, to whom the record pertains, when the individual has requested assistance from the Member with respect to the subject matter of the record.
4. A record in this system of records may be disclosed, as a routine use, to a contractor of the Agency having need for the information in order to perform a contract. Recipients of information shall be required to comply with the requirements of the Privacy Act of 1974, as amended, pursuant to 5 U.S.C. 552a(m).
5. A record related to an International Application filed under the Patent Cooperation Treaty in this system of records may be disclosed, as a routine use, to the International Bureau of the World Intellectual Property Organization, pursuant to the Patent Cooperation Treaty.
6. A record in this system of records may be disclosed, as a routine use, to another federal agency for purposes of National Security review (35 U.S.C. 181) and for review pursuant to the Atomic Energy Act (42 U.S.C. 218(c)).
7. A record from this system of records may be disclosed, as a routine use, to the Administrator, General Services, or his/her designee, during an inspection of records conducted by GSA as part of that agency's responsibility to recommend improvements in records management practices and programs, under authority of 44 U.S.C. 2904 and 2906. Such disclosure shall be made in accordance with the GSA regulations governing inspection of records for this purpose, and any other relevant (*i.e.*, GSA or Commerce) directive. Such disclosure shall not be used to make determinations about individuals.
8. A record from this system of records may be disclosed, as a routine use, to the public after either publication of the application pursuant to 35 U.S.C. 122(b) or issuance of a patent pursuant to 35 U.S.C. 151. Further, a record may be disclosed, subject to the limitations of 37 CFR 1.14, as a routine use, to the public if the record was filed in an application which became abandoned or in which the proceedings were terminated and which application is referenced by either a published application, an application open to public inspection or an issued patent.
9. A record from this system of records may be disclosed, as a routine use, to a Federal, State, or local law enforcement agency, if the USPTO becomes aware of a violation or potential violation of law or regulation.

SitePro, Ex. 2006
TankLogix v. SitePro, IPR2025-00651

Under the Paperwork Reduction Act of 1995, no persons are required to respond to a collection of information unless it displays a valid OMB control number.

STATEMENT UNDER 37 CFR 3.73(b)

Applicant/Patent Owner: Dresser Inc.

Application No./Patent No.: 12/794,898 Filed/Issue Date: June 7, 2010

Titled: CHEMICAL INJECTION SYSTEM

Dresser Inc., a Corporation
(Name of Assignee) (Type of Assignee, e.g., corporation, partnership, university, government agency, etc

states that it is:

1. [X] the assignee of the entire right, title, and interest in;

2. [ ] an assignee of less than the entire right, title, and interest in (The extent (by percentage) of its ownership interest is _____ %); or

3. [ ] the assignee of an undivided interest in the entirety of (a complete assignment from one of the joint inventors was made)

the patent application/patent identified above, by virtue of either:

A. [ ] An assignment from the inventor(s) of the patent application/patent identified above. The assignment was recorded in the United States Patent and Trademark Office at Reel 025775, Frame 0610, or for which a copy therefore is attached.

OR

B. [ ] A chain of title from the inventor(s), of the patent application/patent identified above, to the current assignee as follows:

1. From: _____ To: _____
The document was recorded in the United States Patent and Trademark Office at
Reel _____, Frame _____, or for which a copy thereof is attached.

2. From: _____ To: _____
The document was recorded in the United States Patent and Trademark Office at
Reel _____, Frame _____, or for which a copy thereof is attached.

3. From: _____ To: _____
The document was recorded in the United States Patent and Trademark Office at
Reel _____, Frame _____, or for which a copy thereof is attached.

[ ] Additional documents in the chain of title are listed on a supplemental sheet(s).

[ ] As required by 37 CFR 3.73(b)(1)(i), the documentary evidence of the chain of title from the original owner to the assignee was, or concurrently is being, submitted for recordation pursuant to 37 CFR 3.11.

[NOTE: A separate copy (*i.e.*, a true copy of the original assignment document(s)) must be submitted to Assignment Division in accordance with 37 CFR Part 3, to record the assignment in the records of the USPTO. See MPEP 302.08]

The undersigned (whose title is supplied below) is authorized to act on behalf of the assignee.

/jet50352/	August 7, 2014
Signature	Date
Jonathan E. Thomas	Senior Counsel
Printed or Typed Name	Title

This collection of information is required by 37 CFR 3.73(b). The information is required to obtain or retain a benefit by the public which is to file (and by the USPTO to process) an application. Confidentiality is governed by 35 U.S.C. 122 and 37 CFR 1.11 and 1.14. This collection is estimated to take 12 minutes to complete, including gathering, preparing, and submitting the completed application form to the USPTO. Time will vary depending upon the individual case. Any comments on the amount of time you require to complete this form and/or suggestions for reducing this burden, should be sent to the Chief Information Officer, U.S. Patent and Trademark Office, U.S. Department of Commerce, P.O. Box 1450, Alexandria, VA 22313-1450. DO NOT SEND FEES OR COMPLETED FORMS TO THIS ADDRESS. **SEND TO: Commissioner for Patents, P.O. Box 1450, Alexandria, VA 22313-1450.**

If you need assistance in completing the form, call 1-800-PTO-9199 and select option 2.

SitePro, Ex. 2006
TankLogix v. SitePro, IPR2025-00651

Privacy Act Statement

The **Privacy Act of 1974 (P.L. 93-579)** requires that you be given certain information in connection with your submission of the attached form related to a patent application or patent. Accordingly, pursuant to the requirements of the Act, please be advised that: (1) the general authority for the collection of this information is 35 U.S.C. 2(b)(2); (2) furnishing of the information solicited is voluntary; and (3) the principal purpose for which the information is used by the U.S. Patent and Trademark Office is to process and/or examine your submission related to a patent application or patent. If you do not furnish the requested information, the U.S. Patent and Trademark Office may not be able to process and/or examine your submission, which may result in termination of proceedings or abandonment of the application or expiration of the patent.

The information provided by you in this form will be subject to the following routine uses:

1. The information on this form will be treated confidentially to the extent allowed under the Freedom of Information Act (5 U.S.C. 552) and the Privacy Act (5 U.S.C 552a). Records from this system of records may be disclosed to the Department of Justice to determine whether disclosure of these records is required by the Freedom of Information Act.
2. A record from this system of records may be disclosed, as a routine use, in the course of presenting evidence to a court, magistrate, or administrative tribunal, including disclosures to opposing counsel in the course of settlement negotiations.
3. A record in this system of records may be disclosed, as a routine use, to a Member of Congress submitting a request involving an individual, to whom the record pertains, when the individual has requested assistance from the Member with respect to the subject matter of the record.
4. A record in this system of records may be disclosed, as a routine use, to a contractor of the Agency having need for the information in order to perform a contract. Recipients of information shall be required to comply with the requirements of the Privacy Act of 1974, as amended, pursuant to 5 U.S.C. 552a(m).
5. A record related to an International Application filed under the Patent Cooperation Treaty in this system of records may be disclosed, as a routine use, to the International Bureau of the World Intellectual Property Organization, pursuant to the Patent Cooperation Treaty.
6. A record in this system of records may be disclosed, as a routine use, to another federal agency for purposes of National Security review (35 U.S.C. 181) and for review pursuant to the Atomic Energy Act (42 U.S.C. 218(c)).
7. A record from this system of records may be disclosed, as a routine use, to the Administrator, General Services, or his/her designee, during an inspection of records conducted by GSA as part of that agency's responsibility to recommend improvements in records management practices and programs, under authority of 44 U.S.C. 2904 and 2906. Such disclosure shall be made in accordance with the GSA regulations governing inspection of records for this purpose, and any other relevant (*i.e.*, GSA or Commerce) directive. Such disclosure shall not be used to make determinations about individuals.
8. A record from this system of records may be disclosed, as a routine use, to the public after either publication of the application pursuant to 35 U.S.C. 122(b) or issuance of a patent pursuant to 35 U.S.C. 151. Further, a record may be disclosed, subject to the limitations of 37 CFR 1.14, as a routine use, to the public if the record was filed in an application which became abandoned or in which the proceedings were terminated and which application is referenced by either a published application, an application open to public inspection or an issued patent.
9. A record from this system of records may be disclosed, as a routine use, to a Federal, State, or local law enforcement agency, if the USPTO becomes aware of a violation or potential violation of law or regulation.

SitePro, Ex. 2006
TankLogix v. SitePro, IPR2025-00651

Electronic Acknowledgement Receipt

EFS ID:	19798268
Application Number:	12794898
International Application Number:	
Confirmation Number:	9904
Title of Invention:	Chemical Injection System
First Named Inventor/Applicant Name:	Francisco M. Gutierrez
Customer Number:	13090
Filer:	Michael J. Wasco
Filer Authorized By:	
Attorney Docket Number:	255763; 3060861 US01
Receipt Date:	07-AUG-2014
Filing Date:	07-JUN-2010
Time Stamp:	09:06:53
Application Type:	Utility under 35 USC 111(a)

Payment information:

Submitted with Payment	no

File Listing:

Document Number	Document Description	File Name	File Size(Bytes)/ Message Digest	Multi Part /.zip	Pages (if appl.)
1	Power of Attorney	POA.pdf	182492 2506ab8b3cbc2f57a2df278fa80303355ab3dd6e	no	2

Warnings:

Information:

SitePro, Ex. 2006
TankLogix v. SitePro, IPR2025-00651

2	Assignee showing of ownership per 37 CFR 3.73.	Statement.pdf	179147 1c82d0e41998102fb3e96851561bd7b113305f62	no	2

Warnings:

Information:

Total Files Size (in bytes):	361639

This Acknowledgement Receipt evidences receipt on the noted date by the USPTO of the indicated documents, characterized by the applicant, and including page counts, where applicable. It serves as evidence of receipt similar to a Post Card, as described in MPEP 503.

New Applications Under 35 U.S.C. 111
If a new application is being filed and the application includes the necessary components for a filing date (see 37 CFR 1.53(b)-(d) and MPEP 506), a Filing Receipt (37 CFR 1.54) will be issued in due course and the date shown on this Acknowledgement Receipt will establish the filing date of the application.

National Stage of an International Application under 35 U.S.C. 371
If a timely submission to enter the national stage of an international application is compliant with the conditions of 35 U.S.C. 371 and other applicable requirements a Form PCT/DO/EO/903 indicating acceptance of the application as a national stage submission under 35 U.S.C. 371 will be issued in addition to the Filing Receipt, in due course.

New International Application Filed with the USPTO as a Receiving Office
If a new international application is being filed and the international application includes the necessary components for an international filing date (see PCT Article 11 and MPEP 1810), a Notification of the International Application Number and of the International Filing Date (Form PCT/RO/105) will be issued in due course, subject to prescriptions concerning national security, and the date shown on this Acknowledgement Receipt will establish the international filing date of the application.

SitePro, Ex. 2006
TankLogix v. SitePro, IPR2025-00651

UNITED STATES PATENT AND TRADEMARK OFFICE

UNITED STATES DEPARTMENT OF COMMERCE
United States Patent and Trademark Office
Address: COMMISSIONER FOR PATENTS
P.O. Box 1450
Alexandria, Virginia 22313-1450
www.uspto.gov

APPLICATION NUMBER	FILING OR 371(C) DATE	FIRST NAMED APPLICANT	ATTY. DOCKET NO./TITLE
12/794,898	06/07/2010	Francisco M. Gutierrez	255763; 3060861 US01

CONFIRMATION NO. 9904

POA ACCEPTANCE LETTER

125443
Paul, Frank & Collins/GE
One Church Street
P.O. Box 1307
Burlington, VT 05402

OC000000070119976

Date Mailed: 08/12/2014

NOTICE OF ACCEPTANCE OF POWER OF ATTORNEY

This is in response to the Power of Attorney filed 08/07/2014.

The Power of Attorney in this application is accepted. Correspondence in this application will be mailed to the above address as provided by 37 CFR 1.33.

/tgebre/

Office of Data Management, Application Assistance Unit (571) 272-4000, or (571) 272-4200, or 1-888-786-0101

SitePro, Ex. 2006
TankLogix v. SitePro, IPR2025-00651

UNITED STATES PATENT AND TRADEMARK OFFICE

UNITED STATES DEPARTMENT OF COMMERCE
United States Patent and Trademark Office
Address: COMMISSIONER FOR PATENTS
P.O. Box 1450
Alexandria, Virginia 22313-1450
www.uspto.gov

APPLICATION NUMBER	FILING OR 371(C) DATE	FIRST NAMED APPLICANT	ATTY. DOCKET NO./TITLE
12/794,898	06/07/2010	Francisco M. Gutierrez	255763; 3060861 US01

CONFIRMATION NO. 9904

POWER OF ATTORNEY NOTICE

13090
Hiscock & Barclay LLP/GE
300 South State Street
Syracuse, NY 13202

OC000000070119927

Date Mailed: 08/12/2014

NOTICE REGARDING CHANGE OF POWER OF ATTORNEY

This is in response to the Power of Attorney filed 08/07/2014.

- The Power of Attorney to you in this application has been revoked by the assignee who has intervened as provided by 37 CFR 3.71. Future correspondence will be mailed to the new address of record(37 CFR 1.33).

/tgebre/

Office of Data Management, Application Assistance Unit (571) 272-4000, or (571) 272-4200, or 1-888-786-0101

SitePro, Ex. 2006
TankLogix v. SitePro, IPR2025-00651

PATENT ASSIGNMENT COVER SHEET

Electronic Version v1.1
Stylesheet Version v1.2

EPAS ID: PAT3158669

SUBMISSION TYPE:	NEW ASSIGNMENT
NATURE OF CONVEYANCE:	ASSIGNMENT

CONVEYING PARTY DATA

Name	Execution Date
FRANCISCO M GUTIERREZ	12/16/2014
RICHARD D ATTON	12/16/2014

RECEIVING PARTY DATA

Name:	DRESSER, INC.
Street Address:	15455 DALLAS PARKWAY
Internal Address:	SUITE 1100
City:	ADDISON
State/Country:	TEXAS
Postal Code:	75001

PROPERTY NUMBERS Total: 3

Property Type	Number
Application Number:	14579141
Application Number:	61184890
Application Number:	12794898

CORRESPONDENCE DATA

Fax Number:

Correspondence will be sent to the e-mail address first; if that is unsuccessful, it will be sent using a fax number, if provided; if that is unsuccessful, it will be sent via US Mail.

Phone:	802-658-2311
Email:	ip@pfclaw.com
Correspondent Name:	PAUL, FRANK & COLLINS/GE
Address Line 1:	ONE CHURCH STREET
Address Line 2:	P.O. BOX 1307
Address Line 4:	BURLINGTON, VERMONT 05402

ATTORNEY DOCKET NUMBER:	255763; 11705.05602
NAME OF SUBMITTER:	MICHAEL J WASCO
SIGNATURE:	/Michael J Wasco/
DATE SIGNED:	12/22/2014
	This document serves as an Oath/Declaration (37 CFR 1.63).

Total Attachments: 5

SitePro, Ex. 2006
TankLogix v. SitePro, IPR2025-00651

source=01255763GEOGPFC11705.05602Assignment22DECEMBER2014#page1.tif
source=01255763GEOGPFC11705.05602Assignment22DECEMBER2014#page2.tif
source=01255763GEOGPFC11705.05602Assignment22DECEMBER2014#page3.tif
source=01255763GEOGPFC11705.05602Assignment22DECEMBER2014#page4.tif
source=01255763GEOGPFC11705.05602Assignment22DECEMBER2014#page5.tif

SitePro, Ex. 2006
TankLogix v. SitePro, IPR2025-00651

COMBINED DECLARATION AND GLOBAL ASSIGNMENT

FOR UTILITY OR DESIGN PATENT APPLICATION

As the below named inventor(s), I/we hereby declare that:

This declaration and assignment are directed to:

CHEMICAL INJECTION SYSTEM

☐ the specification of which is attached hereto OR

☒ United States provisional application serial number 61/184,890 filed on June 8, 2009,

☒ United States application or PCT international application number 12/794,898 filed on June 7, 2010, and

☒ United States application or PCT international application number 14/579,141 filed on December 22, 2014, as amended on [date] (if applicable).
(We hereby authorize and request the Company or its delegated attorneys or agents to insert above the application number and filing date of the application when known.)

The above-identified application was made or authorized to be made by us.

We believe that we are original joint inventors of a claimed invention in the application.

We hereby acknowledge that any willful false statement made in this declaration is punishable under 18 USC § 1001 by fine or imprisonment of not more than five (5) years, or both.

We have reviewed and understand the contents of the above-identified application, including the claims, as amended by any amendment referred to above.

We acknowledge the duty to disclose information which is material to the patentability of this application as defined in 37 CFR § 1.56, including, for continuation-in-part applications, material information which became available between the filing date of the prior application and the filing date of the continuation-in-part application.

In accordance with our obligation(s) under an Employee Innovation and Proprietary Information Agreement or (as applicable) arising out of other agreements (such as, but not limited to, the Services Agreement between General Electric Company, a New York corporation, and our employers), and/or for other good and valuable consideration of which we acknowledge receipt, I/we,

SitePro, Ex. 2006
TankLogix v. SitePro, IPR2025-00651

Inventor First Name	Inventor Middle Name	Inventor Last Name		Residence Town	Residence State	Residence Country
Francisco	M.	Gutierrez	Of	League City	TX	US
Richard	D.	Atton	Of	Houston	TX	US
			Of			
			Of			

hereby sell and assign to:

Name of Company: *Dresser, Inc.*
Entity Type (optional):
Address: *15455 Dallas Parkway, Suite 1100, Addison, TX, 75001, USA*

herein referred to as "Company", its successors and assigns our entire respective rights, titles and interests in and to the invention and improvements made or conceived by us described in the application(s) listed above and in the following table:

Country of Filing	Type of Filing	Application Number	Filing Date	Title

(We hereby authorize and request the Company or its delegated attorneys or agents to insert above the application number and filing date of the application(s) when known.)

and any and all applications for patent and patents therefrom in any and all countries, including all divisions, continuations, continuations-in-part, reexaminations, renewals, and reissues thereof, and all rights of priority resulting from the filing of the application(s), and authorize and request any official whose duty it is to issue patents, to issue any patent on the inventions and improvements resulting therefrom to the Company, or its successors or assigns, and agree that on request and without further consideration, we will communicate to the Company or its representatives or nominees any facts known to us respecting the inventions and improvements and testify in any legal proceeding, make all rightful oaths, sign all lawful papers and execute all instruments or documents required or requested for the making and prosecution of any applications of any type for patent, utility model, or other similar rights in all countries including, but not limited to, any provisional, non-provisional, continuation, continuation-in-part, divisional, renewal or substitute thereof, for any derivation proceedings relating thereto, and, as to any patents that issue from such applications, for any supplemental examination, derivation proceeding, opposition, post grant review, reissue, re-examination, inter partes review, or extension thereof, and generally do everything possible to aid the Company, its successors, assigns, and nominees to obtain and enforce proper patent protection for the invention and its improvements in all countries.

Remuneration claims of the inventor(s)/assignor(s) potentially arising from German Law on Employee Inventions, or any other respective country law, remain unaffected by this assignment.

GE Docket No. 255763

INVENTOR 1

Signature: _____ Date: 12/16/2014
Francisco M. Gutierrez

Witnessed by: _____ Date: _____
Signature

_____
Printed Name of Witness

Witnessed by: _____ Date: _____
Signature

_____
Printed Name of Witness

SECTION BELOW IS FOR USE ONLY IF SIGNING IN PRESENCE OF A NOTARY

_____ Date: 12/16/2014

Francisco M. Gutierrez

STATE OF Texas

ss.

COUNTY OF Harris

This 16th day of December, 2014 before me personally came the above-named Francisco M. Gutierrez, to me personally known as the individual who executed the foregoing assignment, who acknowledged to me that he/she executed the same of his/her own free will for the purposes therein set forth.

Seal Kim Hoang (Notary Public)

NOTARY PUBLIC STATE OF TEXAS
KIM HOANG
My Commission Expires
November 12, 2016

5189599_1:11705-05602

SitePro, Ex. 2006
TankLogix v. SitePro, IPR2025-00651

GE Docket No. 255763

INVENTOR 2

Signature: _____ Date: _____
Richard D. Atton

Witnessed by: _____ Date: _____
Signature

_____
Printed Name of Witness

Witnessed by: _____ Date: _____
Signature

_____
Printed Name of Witness

SECTION BELOW IS FOR USE ONLY IF SIGNING IN PRESENCE OF A NOTARY

Richard D Atton Date: 12/16/14

Richard D. Atton

STATE OF Texas
ss.
COUNTY OF Harris

This 16th day of December, 2014 before me personally came the above-named Richard D. Atton, to me personally known as the individual who executed the foregoing assignment, who acknowledged to me that he/she executed the same of his/her own free will for the purposes therein set forth.

Seal Kim Hoang (Notary Public)

NOTARY PUBLIC STATE OF TEXAS
KIM HOANG
My Commission Expires
November 12, 2016

5189599_1:11705-05602

SitePro, Ex. 2006
TankLogix v. SitePro, IPR2025-00651

UNITED STATES PATENT AND TRADEMARK OFFICE

UNITED STATES DEPARTMENT OF COMMERCE
United States Patent and Trademark Office
Address: COMMISSIONER FOR PATENTS
P.O. Box 1450
Alexandria, Virginia 22313-1450
www.uspto.gov

APPLICATION NO.	FILING DATE	FIRST NAMED INVENTOR	ATTORNEY DOCKET NO.	CONFIRMATION NO.
12/794,898	06/07/2010	Francisco M. Gutierrez	255763; 3060861 US01	9904

125443 7590 02/04/2015
Paul, Frank & Collins/GE
One Church Street
P.O. Box 1307
Burlington, VT 05402

EXAMINER
GORDON, BRIAN R

ART UNIT	PAPER NUMBER
1773	

MAIL DATE	DELIVERY MODE
02/04/2015	PAPER

Please find below and/or attached an Office communication concerning this application or proceeding.

The time period for reply, if any, is set in the attached communication.

Notice of Abandonment	Application No.	Applicant(s)
	12/794,898	GUTIERREZ ET AL.
	Examiner	**Art Unit**
	BRIAN R. GORDON	1773

-- The MAILING DATE of this communication appears on the cover sheet with the correspondence address--

This application is abandoned in view of:

1. ☒ Applicant's failure to timely file a proper reply to the Office letter mailed on *7-30-15*.
   (a) ☐ A reply was received on _____ (with a Certificate of Mailing or Transmission dated _____), which is after the expiration of the period for reply (including a total extension of time of _____ month(s)) which expired on _____.
   (b) ☐ A proposed reply was received on _____, but it does not constitute a proper reply under 37 CFR 1.113 to the final rejection.
   (A proper reply under 37 CFR 1.113 to a final rejection consists only of: (1) a timely filed amendment which places the application in condition for allowance; (2) a timely filed Notice of Appeal (with appeal fee); or (3) if this is utility or plant application, a timely filed Request for Continued Examination (RCE) in compliance with 37 CFR 1.114. Note that RCEs are not permitted in design applications.)
   (c) ☐ A reply was received on _____ but it does not constitute a proper reply, or a bona fide attempt at a proper reply, to the non-final rejection. See 37 CFR 1.85(a) and 1.111. (See explanation in box 7 below).
   (d) ☒ No reply has been received.

2. ☐ Applicant's failure to timely pay the required issue fee and publication fee, if applicable, within the statutory period of three months from the mailing date of the Notice of Allowance (PTOL-85).
   (a) ☐ The issue fee and publication fee, if applicable, was received on _____ (with a Certificate of Mailing or Transmission dated _____), which is after the expiration of the statutory period for payment of the issue fee (and publication fee) set in the Notice of Allowance (PTOL-85).
   (b) ☐ The submitted fee of $_____ is insufficient. A balance of $_____ is due.
   The issue fee required by 37 CFR 1.18 is $_____. The publication fee, if required by 37 CFR 1.18(d), is $_____.
   (c) ☐ The issue fee and publication fee, if applicable, has not been received.

3. ☐ Applicant's failure to timely file corrected drawings as required by, and within the three-month period set in, the Notice of Allowability (PTO-37).
   (a) ☐ Proposed corrected drawings were received on _____ (with a Certificate of Mailing or Transmission dated _____), which is after the expiration of the period for reply.
   (b) ☐ No corrected drawings have been received.

4. ☐ The letter of express abandonment which is signed by the attorney or agent of record or other party authorized under 37 CFR 1.33(b). See 37 CFR 1.138(b).

5. ☐ The letter of express abandonment which is signed by an attorney or agent (acting in a representative capacity under 37 CFR 1.34) upon the filing of a continuing application.

6. ☐ The decision by the Board of Patent Appeals and Interference rendered on _____ and because the period for seeking court review of the decision has expired and there are no allowed claims.

7. ☐ The reason(s) below:

/BRIAN R GORDON/
Primary Examiner, Art Unit 1773

Petitions to revive under 37 CFR 1.137, or requests to withdraw the holding of abandonment under 37 CFR 1.181, should be promptly filed to minimize any negative effects on patent term.

SitePro, Ex. 2006
TankLogix v. SitePro, IPR2025-00651