US008447607B2

(12) **United States Patent**
Weider et al.

(10) **Patent No.: US 8,447,607 B2**
(45) **Date of Patent: *May 21, 2013**

(54) **MOBILE SYSTEMS AND METHODS OF SUPPORTING NATURAL LANGUAGE HUMAN-MACHINE INTERACTIONS**

(75) Inventors: **Chris Weider**, Everett, WA (US); **Richard Kennewick**, Woodinville, WA (US); **Mike Kennewick**, Bellevue, WA (US); **Philippe Di Cristo**, Bellevue, WA (US); **Robert A. Kennewick**, Seattle, WA (US); **Samuel Menaker**, Bellevue, WA (US); **Lynn Elise Armstrong**, Woodinville, WA (US)

(73) Assignee: **VoiceBox Technologies, Inc.**, Bellevue, WA (US)

(*) Notice: Subject to any disclaimer, the term of this patent is extended or adjusted under 35 U.S.C. 154(b) by 0 days.

This patent is subject to a terminal disclaimer.

(21) Appl. No.: **13/488,299**

(22) Filed: **Jun. 4, 2012**

(65) **Prior Publication Data**

US 2012/0278073 A1 Nov. 1, 2012

Related U.S. Application Data

(60) Continuation of application No. 13/084,197, filed on Apr. 11, 2011, now Pat. No. 8,195,468, which is a division of application No. 11/212,693, filed on Aug. 29, 2005, now Pat. No. 7,949,529.

(51) **Int. Cl.**

G06F 17/27	(2006.01)
G10L 11/00	(2006.01)
G10L 21/00	(2006.01)
G10L 17/00	(2006.01)

(52) **U.S. Cl.**
USPC **704/250**; 704/9; 704/270; 704/270.1; 704/275

(58) **Field of Classification Search**
USPC 704/270–275, 9, 250
See application file for complete search history.

(56) **References Cited**

U.S. PATENT DOCUMENTS

4,430,669	A	2/1984	Cheung	358/122
5,027,406	A	6/1991	Roberts et al.	381/43

(Continued)

FOREIGN PATENT DOCUMENTS

EP	1 320 043 A2	6/2003
EP	1 646 037	4/2006

(Continued)

OTHER PUBLICATIONS

Reuters, "IBM to Enable Honda Drivers to Talk to Cars", Charles Schwab & Co., Inc., Jul. 28, 2002, 1 page.

(Continued)

Primary Examiner — Eric Yen
(74) *Attorney, Agent, or Firm* — Pillsbury Winthrop Shaw Pittman LLP

(57) **ABSTRACT**

A mobile system is provided that includes speech-based and non-speech-based interfaces for telematics applications. The mobile system identifies and uses context, prior information, domain knowledge, and user specific profile data to achieve a natural environment for users that submit requests and/or commands in multiple domains. The invention creates, stores and uses extensive personal profile information for each user, thereby improving the reliability of determining the context and presenting the expected results for a particular question or command. The invention may organize domain specific behavior and information into agents, that are distributable or updateable over a wide area network.

15 Claims, 8 Drawing Sheets

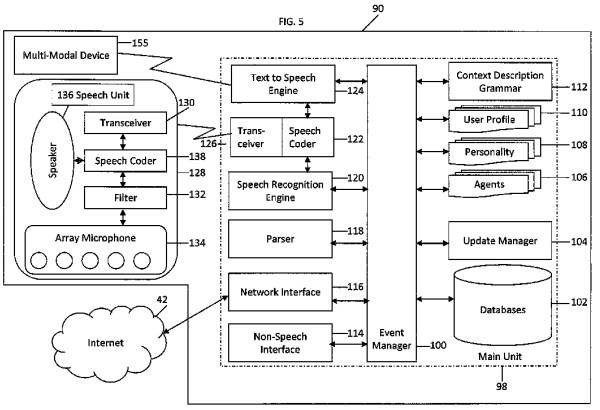

U.S. PATENT DOCUMENTS

5,155,743	A	10/1992	Jacobs	375/28
5,208,748	A	5/1993	Flores et al.	364/419
5,274,560	A	12/1993	LaRue	364/444
5,357,596	A	10/1994	Takebayashi et al.	395/2.84
5,377,350	A	12/1994	Skinner	395/600
5,386,556	A	1/1995	Hedin et al.	395/600
5,424,947	A	6/1995	Nagao et al.	364/419.08
5,471,318	A	11/1995	Ahuja et al.	358/400
5,475,733	A	12/1995	Eisdorfer et al.	379/52
5,488,652	A	1/1996	Bielby et al.	379/88
5,499,289	A	3/1996	Bruno et al.	379/220
5,500,920	A	3/1996	Kupiec	395/2.79
5,517,560	A	5/1996	Greenspan	379/114
5,533,108	A	7/1996	Harris et al.	379/201
5,537,436	A	7/1996	Bottoms et al.	375/222
5,539,744	A	7/1996	Chu et al.	370/60
5,557,667	A	9/1996	Bruno et al.	379/201
5,563,937	A	10/1996	Bruno et al.	379/201
5,577,165	A	11/1996	Takebayashi et al.	395/2.84
5,590,039	A	12/1996	Ikeda et al.	395/759
5,608,635	A	3/1997	Tamai	364/449.3
5,617,407	A	4/1997	Bareis	369/275.3
5,633,922	A	5/1997	August et al.	379/220
5,675,629	A	10/1997	Raffel et al.	379/58
5,696,965	A	12/1997	Dedrick	395/610
5,708,422	A	1/1998	Blonder et al.	340/825.34
5,721,938	A	2/1998	Stuckey	395/754
5,722,084	A	2/1998	Chakrin et al.	455/551
5,740,256	A	4/1998	Castello Da Costa et al.	361/94.7
5,742,763	A	4/1998	Jones	395/200.3
5,748,841	A	5/1998	Morin et al.	395/2.66
5,748,974	A	5/1998	Johnson	395/759
5,752,052	A	5/1998	Richardson et al.	395/759
5,754,784	A	5/1998	Garland et al.	395/200.49
5,761,631	A	6/1998	Nasukawa	704/9
5,774,859	A	6/1998	Houser et al.	704/275
5,794,050	A	8/1998	Dahlgren et al.	395/708
5,794,196	A	8/1998	Yegnanarayanan et al.	704/255
5,797,112	A	8/1998	Komatsu et al.	701/201
5,799,276	A	8/1998	Komissarchik et al.	704/251
5,802,510	A	9/1998	Jones	707/2
5,832,221	A	11/1998	Jones	375/200.36
5,839,107	A	11/1998	Gupta et al.	704/270
5,848,396	A	12/1998	Gerace	705/10
5,855,000	A	12/1998	Waibel et al.	704/235
5,867,817	A	2/1999	Catallo et al.	704/255
5,878,385	A	3/1999	Bralich et al.	704/9
5,878,386	A	3/1999	Coughlin	704/10
5,892,813	A	4/1999	Morin et al.	379/88.01
5,892,900	A	4/1999	Ginter et al.	395/186
5,895,464	A	4/1999	Bhandari et al.	707/3
5,895,466	A	4/1999	Goldberg et al.	707/5
5,897,613	A	4/1999	Chan	704/210
5,902,347	A	5/1999	Backman et al.	701/200
5,911,120	A	6/1999	Jarett et al.	455/417
5,918,222	A	6/1999	Fukui et al.	707/1
5,926,784	A	7/1999	Richardson et al.	704/9
5,933,822	A	8/1999	Braden-Harder et al.	707/5
5,953,393	A	9/1999	Culbreth et al.	379/88.25
5,960,397	A	9/1999	Rahim	704/244
5,960,399	A	9/1999	Barclay et al.	704/270
5,960,447	A	9/1999	Holt et al.	707/500
5,963,894	A	10/1999	Richardson et al.	704/9
5,963,940	A	10/1999	Liddy et al.	707/5
5,987,404	A	11/1999	Della Pietra et al.	704/9
5,991,721	A	11/1999	Asano et al.	704/257
5,995,119	A	11/1999	Cosatto et al.	345/473
5,995,928	A	11/1999	Nguyen et al.	704/251
6,009,382	A	12/1999	Martino et al.	704/1
6,014,559	A	1/2000	Amin	455/413
6,018,708	A	1/2000	Dahan et al.	704/244
6,021,384	A	2/2000	Gorin et al.	704/1
6,035,267	A	3/2000	Watanabe et al.	704/1
6,044,347	A	3/2000	Abella et al.	704/272
6,049,602	A	4/2000	Foladare et al.	379/265
6,049,607	A	4/2000	Marash et al.	379/410
6,058,187	A	5/2000	Chen	380/21
6,067,513	A	5/2000	Ishimitsu	704/233
6,076,059	A	6/2000	Glickman et al.	704/260
6,078,886	A	6/2000	Dragosh et al.	704/270
6,081,774	A	6/2000	De Hita et al.	704/9
6,085,186	A	7/2000	Christianson et al.	707/3
6,101,241	A	8/2000	Boyce et al.	379/88.01
6,108,631	A	8/2000	Ruhl	704/270
6,119,087	A	9/2000	Kuhn et al.	704/270
6,134,235	A	10/2000	Goldman et al.	370/352
6,144,667	A	11/2000	Doshi et al.	370/401
6,144,938	A	11/2000	Surace et al.	704/257
6,154,526	A	11/2000	Dahlke et al.	379/88.03
6,160,883	A	12/2000	Jackson et al.	379/230
6,167,377	A	12/2000	Gillick et al.	704/240
6,173,266	B1	1/2001	Marx et al.	704/270
6,173,279	B1	1/2001	Levin et al.	707/5
6,175,858	B1	1/2001	Bulfer et al.	709/206
6,185,535	B1	2/2001	Hedin et al.	704/270
6,188,982	B1	2/2001	Chiang	704/256
6,192,110	B1	2/2001	Abella et al.	379/88.01
6,192,338	B1	2/2001	Haszto et al.	704/257
6,195,634	B1 *	2/2001	Dudemaine et al.	704/231
6,195,651	B1	2/2001	Handel et al.	707/2
6,199,043	B1	3/2001	Happ	704/272
6,208,964	B1	3/2001	Sabourin	704/244
6,208,972	B1	3/2001	Grant et al.	704/275
6,219,346	B1	4/2001	Maxemchuk	370/338
6,219,643	B1	4/2001	Cohen et al.	704/257
6,226,612	B1	5/2001	Srenger et al.	704/256
6,233,556	B1	5/2001	Teunen et al.	704/250
6,233,559	B1	5/2001	Balakrishnan	704/275
6,233,561	B1	5/2001	Junqua et al.	704/277
6,236,968	B1	5/2001	Kanevsky et al.	704/275
6,246,981	B1	6/2001	Papineni et al.	704/235
6,246,990	B1	6/2001	Happ	704/275
6,266,636	B1	7/2001	Kosaka et al.	704/244
6,269,336	B1	7/2001	Ladd et al.	704/270
6,272,455	B1	8/2001	Hoshen et al.	704/1
6,275,231	B1	8/2001	Obradovich	345/349
6,278,968	B1	8/2001	Franz et al.	704/3
6,288,319	B1	9/2001	Catona	84/609
6,292,767	B1	9/2001	Jackson et al.	704/1
6,301,560	B1	10/2001	Masters	704/251
6,308,151	B1	10/2001	Smith	704/235
6,314,402	B1	11/2001	Monaco et al.	704/275
6,362,748	B1	3/2002	Huang	340/901
6,366,882	B1	4/2002	Bijl et al.	704/235
6,366,886	B1	4/2002	Dragosh et al.	704/270.1
6,374,214	B1	4/2002	Friedland et al.	704/235
6,377,913	B1	4/2002	Coffman et al.	704/8
6,381,535	B1	4/2002	Durocher et al.	701/202
6,385,596	B1	5/2002	Wiser et al.	705/51
6,385,646	B1	5/2002	Brown et al.	709/217
6,393,403	B1	5/2002	Majaniemi	704/275
6,393,428	B1	5/2002	Miller et al.	707/102
6,397,181	B1	5/2002	Li et al.	704/256
6,404,878	B1	6/2002	Jackson et al.	379/221.01
6,405,170	B1	6/2002	Phillips et al.	704/270
6,408,272	B1	6/2002	White et al.	704/270.1
6,411,810	B1	6/2002	Maxemchuk	455/453
6,415,257	B1	7/2002	Junqua et al.	704/275
6,418,210	B1	7/2002	Sayko	379/142.15
6,420,975	B1	7/2002	DeLine et al.	340/815.4
6,429,813	B2	8/2002	Feigen	342/357.13
6,430,285	B1	8/2002	Bauer et al.	379/265.01
6,430,531	B1	8/2002	Polish	704/257
6,434,523	B1	8/2002	Monaco	704/257
6,434,524	B1	8/2002	Weber	704/257
6,434,529	B1	8/2002	Walker et al.	704/275
6,442,522	B1	8/2002	Carberry et al.	704/257
6,446,114	B1	9/2002	Bulfer et al.	709/206
6,453,153	B1	9/2002	Bowker et al.	455/67.4
6,453,292	B2	9/2002	Ramaswamy et al.	704/235
6,456,711	B1	9/2002	Cheung et al.	379/265.09
6,456,974	B1	9/2002	Baker et al.	704/270.1
6,466,654	B1	10/2002	Cooper et al.	379/88.01
6,466,899	B1	10/2002	Yano et al.	704/1
6,470,315	B1	10/2002	Netsch et al.	704/256

6,498,797 B1 12/2002 Anerousis et al. 370/522
6,499,013 B1 12/2002 Weber 704/257
6,501,833 B2 12/2002 Phillips et al. 379/88.07
6,501,834 B1 12/2002 Milewski et al. 379/93.24
6,510,417 B1 1/2003 Woods et al. 704/275
6,513,006 B2 1/2003 Howard et al. 704/257
6,522,746 B1 2/2003 Marchok et al. 379/406.03
6,523,061 B1 2/2003 Halverson et al. 709/202
6,532,444 B1 3/2003 Weber 704/257
6,539,348 B1 3/2003 Bond et al. 704/9
6,549,629 B2 4/2003 Finn et al. 381/92
6,553,372 B1 4/2003 Brassell et al. 707/5
6,556,970 B1 4/2003 Sasaki et al. 704/257
6,556,973 B1 4/2003 Lewin 704/277
6,560,576 B1 5/2003 Cohen et al. 704/270
6,560,590 B1 5/2003 Shwe et al. 706/55
6,567,778 B1 5/2003 Chao Chang et al. 704/257
6,567,797 B1 5/2003 Schuetze et al. 707/2
6,570,555 B1 5/2003 Prevost et al. 345/156
6,570,964 B1 5/2003 Murveit et al. 379/67.1
6,571,279 B1 5/2003 Herz et al. 709/217
6,574,597 B1 6/2003 Mohri et al. 704/251
6,574,624 B1 6/2003 Johnson et al. 707/5
6,578,022 B1 6/2003 Foulger et al. 706/45
6,581,103 B1 6/2003 Dengler 709/231
6,584,439 B1 6/2003 Geilhufe et al. 704/270
6,587,858 B1 7/2003 Strazza 707/102
6,591,239 B1 7/2003 McCall et al. 704/275
6,594,257 B1 7/2003 Doshi et al. 370/352
6,594,367 B1 7/2003 Marash et al. 381/92
6,598,018 B1 7/2003 Junqua 704/251
6,601,026 B2 7/2003 Appelt et al. 704/9
6,604,075 B1 8/2003 Brown et al. 704/270.1
6,604,077 B2 8/2003 Dragosh et al. 704/270.1
6,606,598 B1 8/2003 Holthouse et al. 704/275
6,611,692 B2 8/2003 Raffel et al. 455/552
6,614,773 B1 9/2003 Maxemchuk 370/337
6,615,172 B1 9/2003 Bennett et al. 704/257
6,622,119 B1 9/2003 Ramaswamy et al. 704/9
6,629,066 B1 9/2003 Jackson et al. 704/9
6,631,346 B1 10/2003 Karaorman et al. 704/9
6,631,351 B1 10/2003 Ramachandran et al. 704/270
6,633,846 B1 10/2003 Bennett et al. 704/257
6,643,620 B1 11/2003 Contolini et al. 704/270
6,650,747 B1 11/2003 Bala et al. 379/265.06
6,658,388 B1 12/2003 Kleindienst et al. 704/275
6,678,680 B1 1/2004 Woo 707/6
6,681,206 B1 1/2004 Gorin et al. 704/243
6,691,151 B1 2/2004 Cheyer et al. 709/202
6,701,294 B1 3/2004 Ball et al. 704/257
6,704,396 B2 3/2004 Parolkar et al. 379/88.17
6,704,576 B1 3/2004 Brachman et al. 455/503
6,704,708 B1 3/2004 Pickering 704/235
6,708,150 B1 3/2004 Hirayama et al. 704/243
6,721,001 B1 4/2004 Berstis 348/231.3
6,721,706 B1 4/2004 Strubbe et al. 704/275
6,735,592 B1 5/2004 Neumann et al. 707/101
6,741,931 B1 5/2004 Kohut et al. 701/209
6,742,021 B1 5/2004 Halverson et al. 709/218
6,745,161 B1 6/2004 Arnold et al. 704/7
6,751,591 B1 6/2004 Gorin et al. 704/257
6,751,612 B1 6/2004 Schuetze et al. 707/4
6,754,485 B1 6/2004 Obradovich et al. 455/414.1
6,757,544 B2 6/2004 Rangarajan et al. 455/456.1
6,757,718 B1 6/2004 Halverson et al. 709/218
6,795,808 B1 9/2004 Strubbe et al. 704/275
6,801,604 B2 10/2004 Maes et al. 379/88.17
6,801,893 B1 10/2004 Backfried et al. 704/257
6,829,603 B1 12/2004 Chai et al. 707/5
6,832,230 B1 12/2004 Zilliacus et al. 707/203
6,833,848 B1 12/2004 Wolff et al. 345/719
6,850,603 B1 2/2005 Eberle et al. 379/88.16
6,856,990 B2 2/2005 Barile et al. 707/10
6,865,481 B2 3/2005 Kawazoe et al. 701/211
6,868,380 B2 3/2005 Kroeker 704/240
6,877,001 B2 4/2005 Wolf et al. 707/3
6,877,134 B1 4/2005 Fuller et al. 715/500.1
6,901,366 B1 5/2005 Kuhn et al. 704/275
6,910,003 B1 6/2005 Arnold et al. 704/4
6,912,498 B2 6/2005 Stevens et al. 704/235
6,934,756 B2 8/2005 Maes 709/227
6,937,977 B2 8/2005 Gerson 704/201
6,944,594 B2 9/2005 Busayapongchai et al. .. 704/275
6,950,821 B2 9/2005 Faybishenko et al. 707/10
6,954,755 B2 10/2005 Reisman 707/10
6,959,276 B2 10/2005 Droppo et al. 704/226
6,968,311 B2 11/2005 Knockeart et al. 704/270
6,973,387 B2 12/2005 Masclet et al. 701/211
6,975,993 B1 12/2005 Keiller 704/275
6,980,092 B2 12/2005 Turnbull et al. 340/425.5
6,983,055 B2 1/2006 Luo 381/313
6,990,513 B2 1/2006 Belfiore et al. 709/203
6,996,531 B2 2/2006 Korall et al. 704/270
7,003,463 B1 2/2006 Maes et al. 704/270.1
7,016,849 B2 3/2006 Arnold et al. 704/275
7,020,609 B2 3/2006 Thrift et al. 704/270.1
7,024,364 B2 4/2006 Guerra et al. 704/270
7,027,586 B2 4/2006 Bushey et al. 379/265.09
7,027,975 B1 4/2006 Pazandak et al. 704/9
7,035,415 B2 4/2006 Belt et al. 381/92
7,036,128 B1 4/2006 Julia et al. 719/317
7,043,425 B2 5/2006 Pao 704/211
7,054,817 B2 5/2006 Shao 704/270
7,058,890 B2 6/2006 George et al. 715/728
7,062,488 B1 6/2006 Reisman 707/8
7,069,220 B2 6/2006 Coffman et al. 704/275
7,072,834 B2 7/2006 Zhou 704/244
7,082,469 B2 7/2006 Gold et al. 709/231
7,092,928 B1 8/2006 Elad et al. 706/60
7,107,210 B2 9/2006 Deng et al. 704/226
7,107,218 B1 9/2006 Preston 704/270
7,110,951 B1 9/2006 Lemelson et al. 704/270
7,127,400 B2 10/2006 Koch 704/270.1
7,130,390 B2 10/2006 Abburi 379/88.17
7,136,875 B2 11/2006 Anderson et al. 707/104.1
7,137,126 B1 * 11/2006 Coffman et al. 719/328
7,143,037 B1 11/2006 Chestnut 704/251
7,143,039 B1 11/2006 Stifelman et al. 704/270
7,146,319 B2 12/2006 Hunt 704/254
7,165,028 B2 1/2007 Gong 704/233
7,184,957 B2 2/2007 Brookes et al. 704/246
7,190,770 B2 3/2007 Ando et al. 379/88.01
7,197,069 B2 3/2007 Agazzi et al. 375/233
7,203,644 B2 4/2007 Anderson et al. 704/246
7,206,418 B2 4/2007 Yang et al. 381/92
7,207,011 B2 4/2007 Mulvey et al. 715/812
7,228,276 B2 6/2007 Omote et al. 704/243
7,231,343 B1 6/2007 Treadgold et al. 704/9
7,236,923 B1 6/2007 Gupta 704/9
7,272,212 B2 9/2007 Eberle et al. 379/88.17
7,277,854 B2 10/2007 Bennett et al. 704/257
7,283,829 B2 10/2007 Christenson et al. 455/461
7,283,951 B2 10/2007 Marchisio et al. 704/9
7,289,606 B2 10/2007 Sibal et al. 379/52
7,299,186 B2 11/2007 Kuzunuki et al. 704/270.1
7,301,093 B2 11/2007 Sater et al. 84/615
7,305,381 B1 12/2007 Poppink et al. 1/1
7,321,850 B2 1/2008 Wakita 704/10
7,328,155 B2 2/2008 Endo et al. 704/251
7,337,116 B2 2/2008 Charlesworth et al. 704/254
7,340,040 B1 3/2008 Saylor et al. 379/67.1
7,366,285 B2 4/2008 Parolkar et al. 379/88.17
7,366,669 B2 4/2008 Nishitani et al. 704/256
7,376,645 B2 5/2008 Bernard 707/3
7,386,443 B1 6/2008 Parthasarathy et al. 704/201
7,398,209 B2 7/2008 Kennewick et al. 704/255
7,406,421 B2 7/2008 Odinak et al. 704/275
7,415,414 B2 8/2008 Azara et al. 704/270
7,424,431 B2 9/2008 Greene et al. 704/270
7,447,635 B1 11/2008 Konopka et al. 704/275
7,454,608 B2 11/2008 Gopalakrishnan et al. ... 713/100
7,461,059 B2 12/2008 Richardson et al. 707/5
7,472,020 B2 12/2008 Brulle-Drews 701/211
7,472,060 B1 12/2008 Gorin et al. 704/240
7,478,036 B2 1/2009 Shen et al. 704/9
7,487,088 B1 2/2009 Gorin et al. 704/240
7,493,259 B2 2/2009 Jones et al. 704/257
7,493,559 B1 2/2009 Wolff et al. 715/727

7,502,738	B2	3/2009	Kennewick et al.	704/257
7,516,076	B2	4/2009	Walker et al.	704/275
7,529,675	B2	5/2009	Maes	704/270.1
7,536,297	B2	5/2009	Byrd et al.	704/10
7,536,374	B2	5/2009	Au	706/55
7,542,894	B2	6/2009	Murata	704/9
7,546,382	B2	6/2009	Healey et al.	709/246
7,558,730	B2	7/2009	Davis et al.	704/235
7,574,362	B2	8/2009	Walker et al.	704/275
7,577,244	B2	8/2009	Taschereau	379/218.01
7,606,708	B2	10/2009	Hwang	704/257
7,620,549	B2 *	11/2009	Di Cristo et al.	704/257
7,634,409	B2	12/2009	Kennewick et al.	704/257
7,640,006	B2	12/2009	Portman et al.	455/412.1
7,640,160	B2 *	12/2009	Di Cristo et al.	704/257
7,640,272	B2	12/2009	Mahajan et al.	707/104.1
7,676,365	B2	3/2010	Hwang et al.	704/240
7,676,369	B2	3/2010	Fujimoto et al.	704/270
7,684,977	B2	3/2010	Morikawa	704/211
7,693,720	B2	4/2010	Kennewick et al.	704/275
7,729,916	B2	6/2010	Coffman et al.	704/270
7,729,918	B2	6/2010	Walker et al.	704/275
7,729,920	B2	6/2010	Chaar et al.	704/275
7,748,021	B2	6/2010	Obradovich	725/105
7,788,084	B2	8/2010	Brun et al.	704/7
7,801,731	B2	9/2010	Odinak et al.	704/275
7,809,570	B2	10/2010	Kennewick et al.	704/257
7,818,176	B2	10/2010	Freeman et al.	704/270
7,831,426	B2	11/2010	Bennett	704/252
7,831,433	B1	11/2010	Belvin et al.	704/275
7,873,519	B2	1/2011	Bennett	704/257
7,873,523	B2	1/2011	Potter et al.	704/275
7,881,936	B2	2/2011	Longe et al.	704/257
7,894,849	B2	2/2011	Kass et al.	455/550.1
7,902,969	B2	3/2011	Obradovich	340/439
7,917,367	B2	3/2011	Di Cristo et al.	704/270.1
7,920,682	B2	4/2011	Byrne et al.	379/88.18
7,949,529	B2	5/2011	Weider et al.	704/270
7,949,537	B2	5/2011	Walker et al.	704/275
7,953,732	B2	5/2011	Frank et al.	707/724
7,974,875	B1	7/2011	Quilici et al.	705/14.4
7,983,917	B2	7/2011	Kennewick et al.	704/257
7,984,287	B2	7/2011	Gopalakrishnan et al.	713/100
8,005,683	B2	8/2011	Tessel et al.	704/275
8,015,006	B2	9/2011	Kennewick et al.	704/236
8,060,367	B2	11/2011	Keaveney	704/247
8,069,046	B2	11/2011	Kennewick et al.	704/257
8,073,681	B2	12/2011	Baldwin et al.	704/9
8,077,975	B2	12/2011	Ma et al.	382/187
8,082,153	B2	12/2011	Coffman et al.	704/270
8,086,463	B2	12/2011	Ativanichayaphong et al.	704/275
8,112,275	B2	2/2012	Kennewick et al.	704/240
8,140,327	B2	3/2012	Kennewick et al.	704/226
8,140,335	B2	3/2012	Kennewick et al.	704/257
8,145,489	B2	3/2012	Freeman et al.	704/257
8,150,694	B2	4/2012	Kennewick et al.	704/257
8,155,962	B2	4/2012	Kennewick et al.	704/257
8,170,867	B2	5/2012	Germain	704/9
8,195,468	B2 *	6/2012	Weider et al.	704/275
8,219,599	B2	7/2012	Tunstall-Pedoe	707/955
8,224,652	B2	7/2012	Wang et al.	704/275
8,326,627	B2	12/2012	Kennewick et al.	704/257
8,326,634	B2	12/2012	Di Cristo et al.	704/270.1
8,326,637	B2	12/2012	Baldwin et al.	704/275
8,332,224	B2	12/2012	Di Cristo et al.	704/257
8,370,147	B2	2/2013	Kennewick et al.	704/257
2001/0041980	A1	11/2001	Howard et al.	704/270
2001/0049601	A1	12/2001	Kroeker et al.	704/254
2001/0054087	A1	12/2001	Flom et al.	709/218
2002/0015500	A1	2/2002	Belt et al.	381/66
2002/0022927	A1	2/2002	Lemelson et al.	701/301
2002/0029261	A1	3/2002	Shibata	709/219
2002/0032752	A1	3/2002	Gold et al.	709/218
2002/0035501	A1	3/2002	Handel et al.	705/10
2002/0049805	A1	4/2002	Yamada et al.	709/202
2002/0065568	A1	5/2002	Silfvast et al.	700/94
2002/0069059	A1	6/2002	Smith	704/257
2002/0069071	A1	6/2002	Knockeart et al.	704/275
2002/0082911	A1	6/2002	Dunn et al.	705/14
2002/0087326	A1	7/2002	Lee et al.	704/270.1
2002/0087525	A1	7/2002	Abbott et al.	707/3
2002/0120609	A1	8/2002	Lang et al.	707/1
2002/0124050	A1	9/2002	Middeljans	709/203
2002/0133402	A1	9/2002	Faber et al.	705/14
2002/0138248	A1	9/2002	Corston-Oliver et al.	704/1
2002/0143535	A1	10/2002	Kist et al.	704/251
2002/0161646	A1	10/2002	Gailey et al.	705/14
2002/0173961	A1	11/2002	Guerra	704/258
2002/0184373	A1	12/2002	Maes	709/228
2002/0188602	A1	12/2002	Stubler et al.	707/3
2002/0198714	A1	12/2002	Zhou	704/252
2003/0014261	A1	1/2003	Kageyama	704/275
2003/0016835	A1	1/2003	Elko et al.	381/92
2003/0046346	A1	3/2003	Mumick et al.	709/205
2003/0064709	A1	4/2003	Gailey et al.	455/412
2003/0065427	A1	4/2003	Funk et al.	701/1
2003/0088421	A1	5/2003	Maes et al.	704/270.1
2003/0097249	A1	5/2003	Walker et al.	704/1
2003/0110037	A1	6/2003	Walker et al.	704/257
2003/0112267	A1	6/2003	Belrose	345/728
2003/0115062	A1	6/2003	Walker et al.	704/258
2003/0120493	A1	6/2003	Gupta	704/270.1
2003/0135488	A1	7/2003	Amir et al.	707/3
2003/0144846	A1	7/2003	Denenberg et al.	704/277
2003/0158731	A1	8/2003	Falcon et al.	704/231
2003/0161448	A1	8/2003	Parolkar et al.	379/88.17
2003/0182132	A1	9/2003	Niemoeller	704/275
2003/0204492	A1	10/2003	Wolf et al.	707/3
2003/0206640	A1	11/2003	Malvar et al.	381/93
2003/0212550	A1	11/2003	Ubale	704/215
2003/0212558	A1	11/2003	Matula	704/260
2003/0212562	A1	11/2003	Patel et al.	704/275
2003/0225825	A1	12/2003	Healey et al.	709/203
2003/0236664	A1	12/2003	Sharma	704/251
2004/0006475	A1	1/2004	Ehlen et al.	704/270.1
2004/0025115	A1	2/2004	Sienel et al.	715/513
2004/0044516	A1 *	3/2004	Kennewick et al.	704/5
2004/0098245	A1	5/2004	Walker et al.	704/1
2004/0117804	A1	6/2004	Scahill et al.	719/320
2004/0140989	A1	7/2004	Papageorge	345/700
2004/0158555	A1	8/2004	Seedman et al.	707/3
2004/0166832	A1	8/2004	Portman et al.	455/412.1
2004/0167771	A1	8/2004	Duan et al.	704/10
2004/0193408	A1	9/2004	Hunt	704/209
2004/0193420	A1	9/2004	Kennewick et al.	704/257
2004/0199375	A1	10/2004	Ehsani et al.	704/4
2004/0205671	A1	10/2004	Sukehiro et al.	715/532
2004/0243417	A9	12/2004	Pitts, III et al.	704/276
2005/0015256	A1	1/2005	Kargman	704/272
2005/0021334	A1	1/2005	Iwahashi	704/240
2005/0021470	A1	1/2005	Martin et al.	705/51
2005/0021826	A1	1/2005	Kumar	709/232
2005/0033574	A1	2/2005	Kim et al.	704/251
2005/0043940	A1	2/2005	Elder	704/9
2005/0114116	A1	5/2005	Fiedler	704/201
2005/0125232	A1	6/2005	Gadd	704/270.1
2005/0137850	A1	6/2005	Odell	704/4
2005/0137877	A1	6/2005	Oesterling et al.	704/275
2005/0143994	A1	6/2005	Mori et al.	704/235
2005/0216254	A1	9/2005	Gupta et al.	704/9
2005/0234727	A1	10/2005	Chiu	704/270.1
2005/0246174	A1	11/2005	DeGolia	704/270
2005/0283752	A1	12/2005	Fruchter et al.	717/100
2006/0041431	A1	2/2006	Maes	704/270.1
2006/0047509	A1	3/2006	Ding et al.	704/231
2006/0206310	A1	9/2006	Ravikumar et al.	704/9
2006/0217133	A1	9/2006	Christenson et al.	455/461
2006/0285662	A1	12/2006	Yin et al.	379/88.16
2007/0033005	A1	2/2007	Cristo et al.	704/9
2007/0033020	A1	2/2007	(Kelleher) Francois et al.	704/226
2007/0038436	A1	2/2007	Cristo et al.	704/9
2007/0043574	A1	2/2007	Coffman et al.	704/275
2007/0043868	A1	2/2007	Kumar et al.	709/226
2007/0050191	A1	3/2007	Weider et al.	704/275
2007/0055525	A1	3/2007	Kennewick et al.	704/257
2007/0073544	A1	3/2007	Millett et al.	704/277

2007/0078708	A1	4/2007	Yu et al.	705/14
2007/0078709	A1	4/2007	Rajaram	705/14
2007/0118357	A1	5/2007	Kasravi et al.	704/10
2007/0135101	A1	6/2007	Ramati et al.	455/414.1
2007/0146833	A1	6/2007	Satomi et al.	358/537
2007/0162296	A1	7/2007	Altberg et al.	705/1
2007/0179778	A1	8/2007	Gong et al.	704/9
2007/0186165	A1	8/2007	Maislos et al.	715/728
2007/0198267	A1	8/2007	Jones et al.	704/257
2007/0214182	A1	9/2007	Rosenberg	707/104.1
2007/0250901	A1	10/2007	McIntire et al.	725/146
2007/0265850	A1	11/2007	Kennewick et al.	704/257
2007/0299824	A1	12/2007	Pan et al.	707/3
2008/0034032	A1	2/2008	Healey et al.	709/203
2008/0065386	A1	3/2008	Cross et al.	704/270
2008/0091406	A1	4/2008	Baldwin et al.	704/4
2008/0103761	A1	5/2008	Printz et al.	704/9
2008/0109285	A1	5/2008	Reuther et al.	705/7
2008/0115163	A1	5/2008	Gilboa et al.	725/34
2008/0133215	A1	6/2008	Sarukkai	704/2
2008/0140385	A1	6/2008	Mahajan et al.	704/9
2008/0147410	A1	6/2008	Odinak	704/270.1
2008/0177530	A1	7/2008	Cross et al.	704/4
2008/0189110	A1	8/2008	Freeman et al.	704/251
2008/0235023	A1	9/2008	Kennewick et al.	704/257
2008/0235027	A1	9/2008	Cross	704/270.1
2008/0319751	A1	12/2008	Kennewick et al.	704/257
2009/0052635	A1	2/2009	Jones et al.	379/88.02
2009/0067599	A1	3/2009	Agarwal et al.	379/114.21
2009/0106029	A1	4/2009	DeLine et al.	704/275
2009/0117885	A1	5/2009	Roth	455/414.3
2009/0144271	A1	6/2009	Richardson et al.	707/5
2009/0150156	A1	6/2009	Kennewick et al.	704/257
2009/0171664	A1	7/2009	Kennewick et al.	704/257
2009/0216540	A1	8/2009	Tessel et al.	704/275
2009/0271194	A1	10/2009	Davis et al.	704/235
2009/0273563	A1	11/2009	Pryor	345/157
2009/0276700	A1	11/2009	Anderson et al.	715/700
2009/0299745	A1	12/2009	Kennewick et al.	704/257
2009/0313026	A1	12/2009	Coffman et al.	704/275
2010/0023320	A1	1/2010	Di Cristo et al.	704/9
2010/0029261	A1	2/2010	Mikkelsen et al.	455/419
2010/0036967	A1	2/2010	Caine et al.	709/236
2010/0049501	A1	2/2010	Kennewick et al.	704/9
2010/0049514	A1	2/2010	Kennewick et al.	704/233
2010/0057443	A1	3/2010	Di Cristo et al.	704/9
2010/0063880	A1	3/2010	Atsmon et al.	705/14.53
2010/0145700	A1	6/2010	Kennewick et al.	704/257
2010/0185512	A1	7/2010	Borger et al.	705/14.49
2010/0204986	A1	8/2010	Kennewick et al.	704/226
2010/0204994	A1	8/2010	Kennewick et al.	704/257
2010/0217604	A1	8/2010	Baldwin et al.	704/275
2010/0286985	A1	11/2010	Kennewick et al.	704/257
2010/0299142	A1	11/2010	Freeman et al.	704/9
2010/0312566	A1	12/2010	Odinak et al.	704/275
2011/0112827	A1	5/2011	Kennewick et al.	704/9
2011/0112921	A1	5/2011	Kennewick et al.	705/26.1
2011/0131036	A1	6/2011	Di Cristo et al.	704/9
2011/0131045	A1	6/2011	Cristo et al.	704/249
2011/0231182	A1	9/2011	Weider et al.	704/9
2011/0231188	A1	9/2011	Kennewick et al.	704/236
2012/0022857	A1	1/2012	Baldwin et al.	704/9
2012/0101809	A1	4/2012	Kennewick et al.	704/9
2012/0101810	A1	4/2012	Kennewick et al.	704/9
2012/0109753	A1	5/2012	Kennewick et al.	705/14.58
2012/0150636	A1	6/2012	Freeman et al.	705/14.49
2013/0054228	A1	2/2013	Baldwin et al.	704/9

FOREIGN PATENT DOCUMENTS

WO	WO 99/46763	9/1999
WO	WO 00/21232	4/2000
WO	WO 00/46792	8/2000
WO	WO 01/78065	10/2001
WO	WO 2004/072954	8/2004
WO	WO 2007/019318	2/2007
WO	WO 2007/021587	2/2007
WO	WO 2007/027546	3/2007
WO	WO 2007/027989	3/2007
WO	WO 2008/098039	8/2008
WO	WO 2008/118195	10/2008
WO	WO 2009/075912	6/2009
WO	WO 2009/145796	12/2009
WO	WO 2010/096752	8/2010

OTHER PUBLICATIONS

Lin, Bor-shen, et al., "A Distributed Architecture for Cooperative Spoken Dialogue Agents with Coherent Dialogue State and History", ASRU'99, 1999, 4 pages.

Kuhn, Thomas, et al., "Hybrid In-Car Speech Recognition for Mobile Multimedia Applications", Vehicular Technology Conference, IEEE, Jul. 1999, pp. 2009-2013.

Belvin, Robert, et al., "Development of the HRL Route Navigation Dialogue System", Proceedings of the First International Conference on Human Language Technology Research, San Diego, 2001, pp. 1-5.

Lind, R., et al., "The Network Vehicle—A Glimpse into the Future of Mobile Multi-Media", *IEEE Aerosp. Electron. Systems Magazine*, vol. 14, No. 9, Sep. 1999, pp. 27-32.

Zhao, Yilin, "Telematics: Safe and Fun Driving", *IEEE Intelligent Systems*, vol. 17, Issue 1, 2002, pp. 10-14.

Chai et al., "MIND: A Semantics-Based Multimodal Interpretation Framework for Conversational System", *Proceedings of the International CLASS Workshop on Natural, Intelligent and Effective Interaction in Multimodal Dialogue Systems*, Jun. 2002, pp. 37-46.

Cheyer et al., "Multimodal Maps: An Agent-Based Approach", *International Conference on Cooperative Multimodal Communication* (CMC/95), May 24-26, 1995, pp. 111-121.

Elio et al., "On Abstract Task Models and Conversation Policies" in Workshop on Specifying and Implementing Conversation Policies, *Autonomous Agents* '99, Seattle, 1999, 10 pages.

Turunen, "Adaptive Interaction Methods in Speech User Interfaces", Conference on Human Factors in Computing Systems, Seattle, Washington, 2001, pp. 91-92.

Mao, Mark Z., "Automatic Training Set Segmentation for Multi-Pass Speech Recognition", Department of Electrical Engineering, Stanford University, CA, copyright 2005, IEEE, pp. 1-685 to 1-688.

Vanhoucke, Vincent, "Confidence Scoring and Rejection Using Multi-Pass Speech Recognition", Nuance Communications, Menlo Park, CA, 2005, 4 pages.

Weng, Fuliang, et al., "Efficient Lattice Representation and Generation", Speech Technology and Research Laboratory, SRI International, Menlo Park, CA, 1998, 4 pages.

El Meliani et al., "A Syllabic-Filler-Based Continuous Speech Recognizer for Unlimited Vocabulary", Canadian Conference on Electrical and Computer Engineering, vol. 2, Sep. 5-8, 1995, pp. 1007-1010.

Arrington, Michael, "Google Redefines GPS Navigation Landscape: Google Maps Navigation for Android 2.0", TechCrunch, printed from the Internet <http://www.techcrunch.com/2009/10/28/google-redefines-car-gps-navigation-google-maps-navigation-android/>, Oct. 28, 2009, 4 pages.

Bazzi, Issam et al., "Heterogeneous Lexical Units for Automatic Speech Recognition: Preliminary Investigations", *Processing of the IEEE International Conference on Acoustics, Speech, and Signal Processing*, vol. 3, Jun. 5-9, 2000, XP010507574, pp. 1257-1260.

O'Shaughnessy, Douglas, "Interacting with Computers by Voice: Automatic Speech Recognition and Synthesis", *Proceedings of the IEEE*, vol. 91, No. 9, Sep. 1, 2003, XP011100665, pp. 1272-1305.

Statement in Accordance with the Notice from the European Patent Office dated Oct. 1, 2007 Concerning Business Methods (OJ EPO Nov. 2007, 592-593), XP002456252.

* cited by examiner

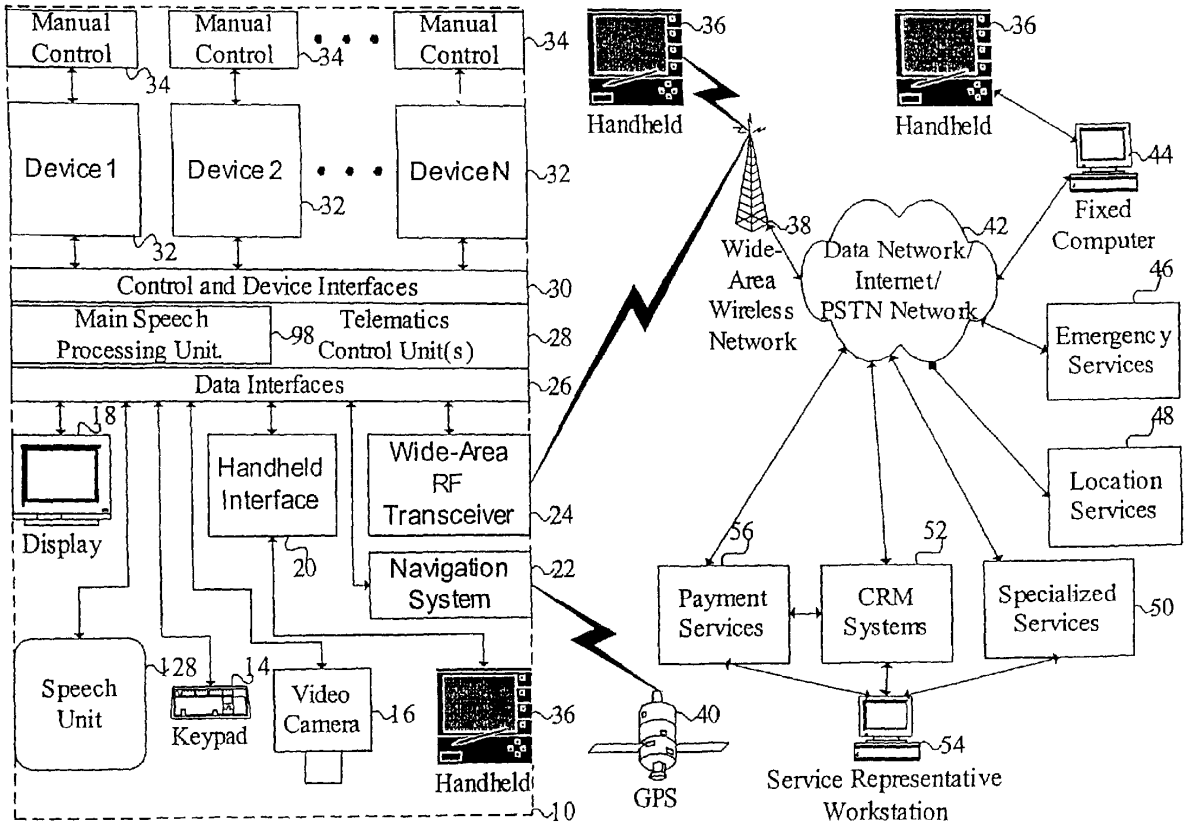
Manual Control
Manual Control
Manual Control
34
34
34
Device 1
Device 2
DeviceN
32
32
32
Control and Device Interfaces
30
Main Speech Processing Unit
98
Telematics Control Unit(s)
28
Data Interfaces
26
18
Display
Handheld Interface
20
Wide-Area RF Transceiver
24
Navigation System
22
Speech Unit
28
14
Keypad
Video Camera
16
Handheld
36
10
Handheld
36
Handheld
36
38
Wide-Area Wireless Network
Data Network/ Internet/ PSTN Network
42
Fixed Computer
44
46
Emergency Services
48
Location Services
56
52
Payment Services
CRM Systems
Specialized Services
50
40
GPS
54
Service Representative Workstation

Figure 1

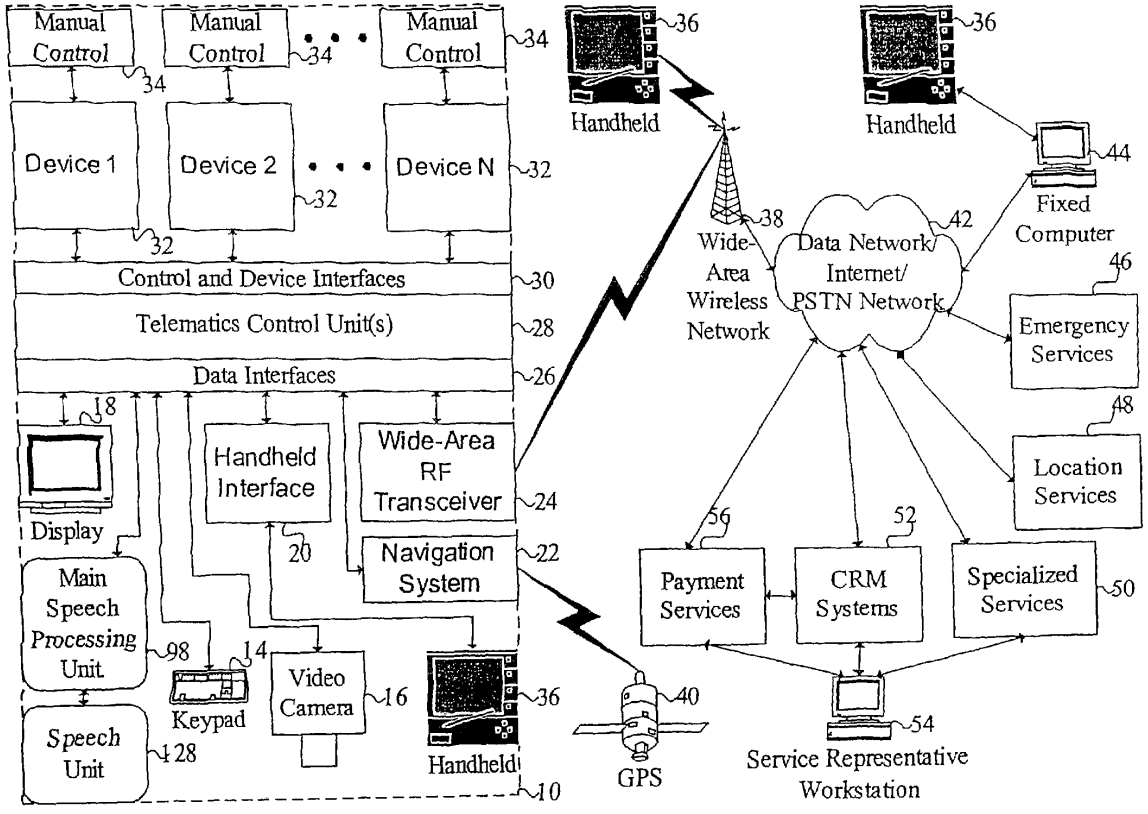
Manual Control
Manual Control
Manual Control
34
Device 1
Device 2
Device N
32
Control and Device Interfaces
30
Telematics Control Unit(s)
28
Data Interfaces
26
18
Display
Handheld Interface
20
Wide-Area RF Transceiver
24
Navigation System
22
Main Speech Processing Unit
98
Speech Unit
128
Keypad
14
Video Camera
16
Handheld
36
10
Handheld
36
Handheld
36
Wide-Area Wireless Network
38
Data Network/ Internet/ PSTN Network
42
Fixed Computer
44
Emergency Services
46
Location Services
48
Payment Services
56
CRM Systems
52
Specialized Services
50
GPS
40
Service Representative Workstation
54

Figure 2

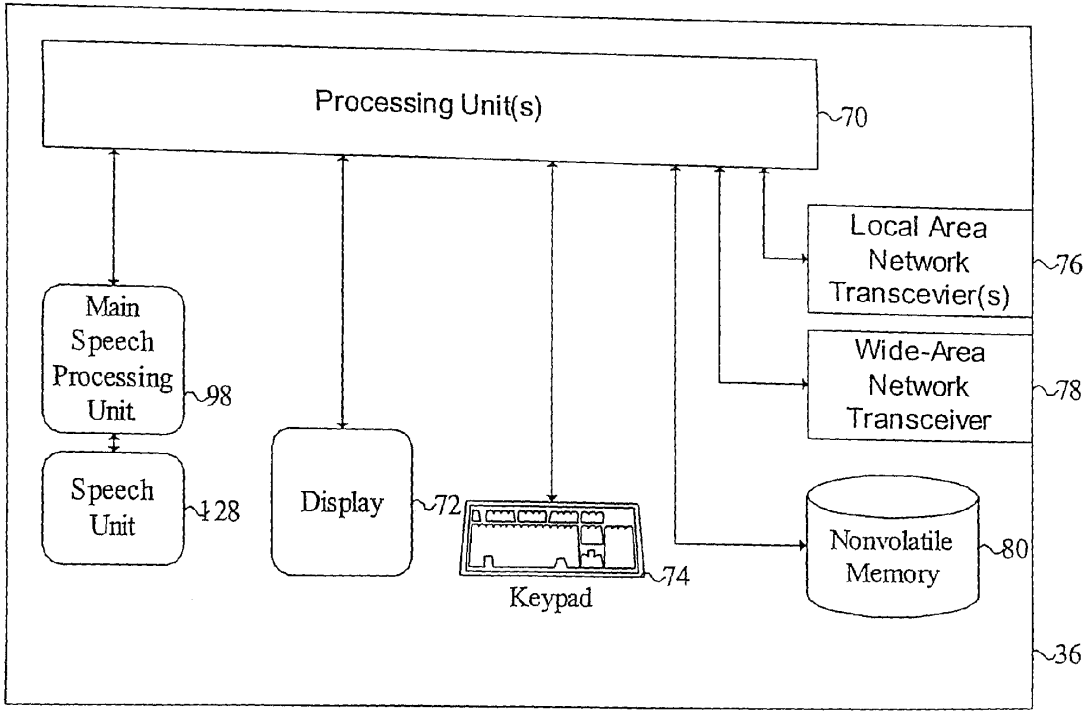
Processing Unit(s)
70
Local Area Network Transcevier(s)
76
Wide-Area Network Transceiver
78
Main Speech Processing Unit
98
Speech Unit
128
Display
72
Keypad
74
Nonvolatile Memory
80
36

Figure 3.

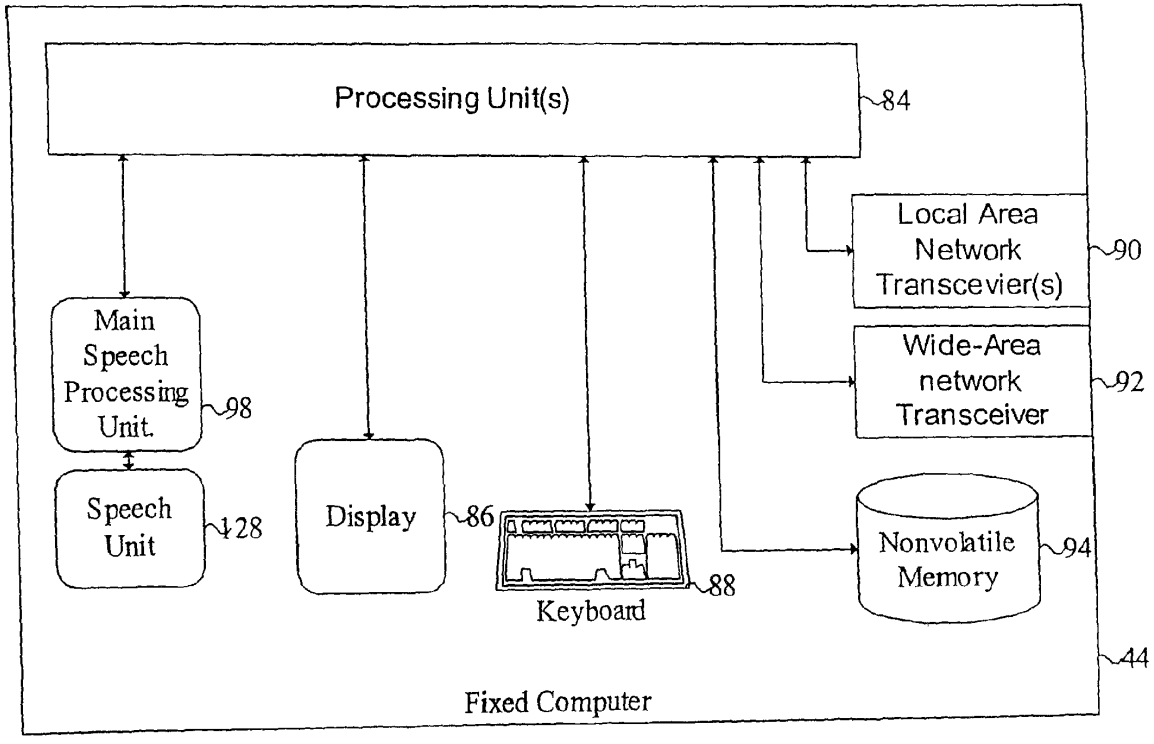
Processing Unit(s)
84
Local Area Network Transcevier(s)
90
Wide-Area network Transceiver
92
Main Speech Processing Unit.
98
Speech Unit
128
Display
86
Keyboard
88
Nonvolatile Memory
94
44
Fixed Computer

Figure 4

FIG. 5

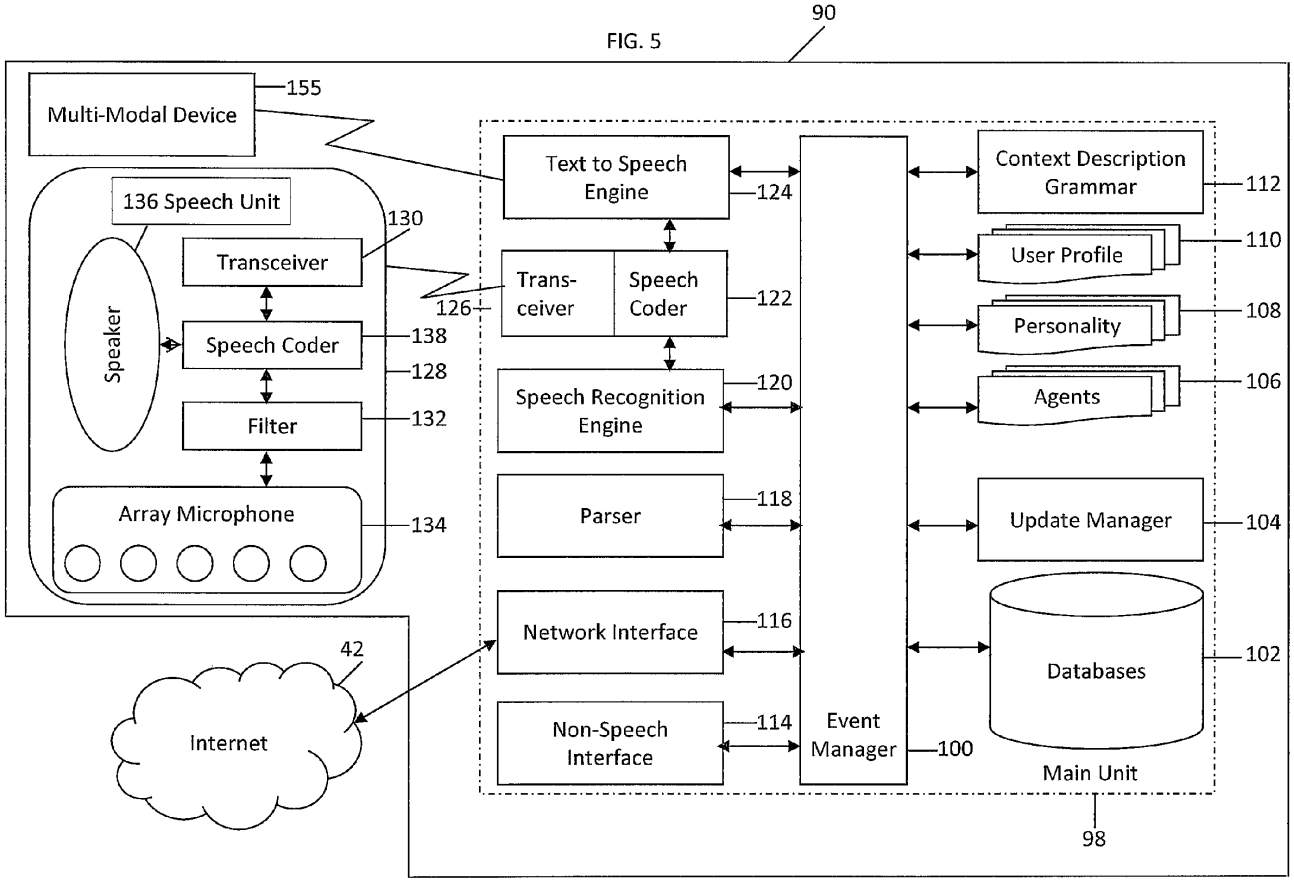
90
Multi-Modal Device
155
136 Speech Unit
130
Transceiver
Speaker
Speech Coder
138
128
Filter
132
Array Microphone
134
126
Text to Speech Engine
124
Trans-ceiver
Speech Coder
122
Speech Recognition Engine
120
Parser
118
Network Interface
116
Non-Speech Interface
114
Event Manager
100
Context Description Grammar
112
User Profile
110
Personality
108
Agents
106
Update Manager
104
Databases
102
Main Unit
98
42
Internet

FIG. 6

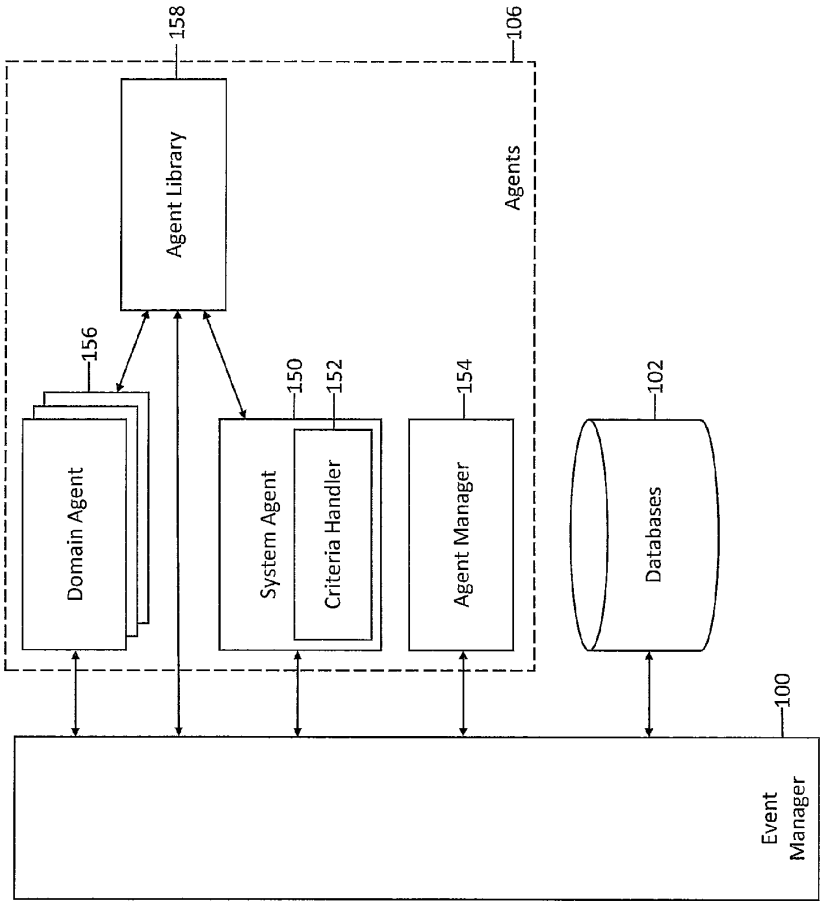
Domain Agent
156
Agent Library
158
System Agent
150
Criteria Handler
152
Agent Manager
154
Agents
106
Databases
102
Event Manager
100

FIG. 7

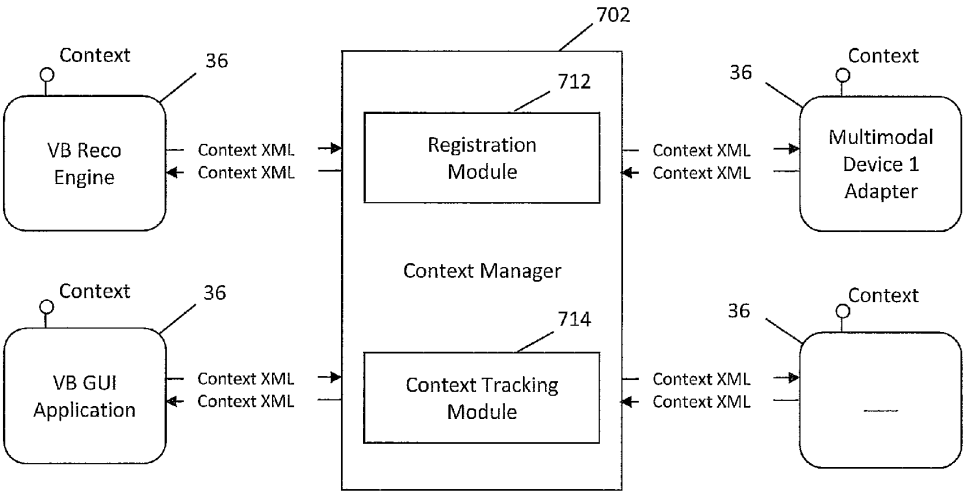
700
702
Context
36
VB Reco Engine
Context XML
Context XML
712
Registration Module
Context Manager
714
Context Tracking Module
Context
36
Multimodal Device 1 Adapter
Context XML
Context XML
Context
36
VB GUI Application
Context XML
Context XML
Context
36
Context XML
Context XML

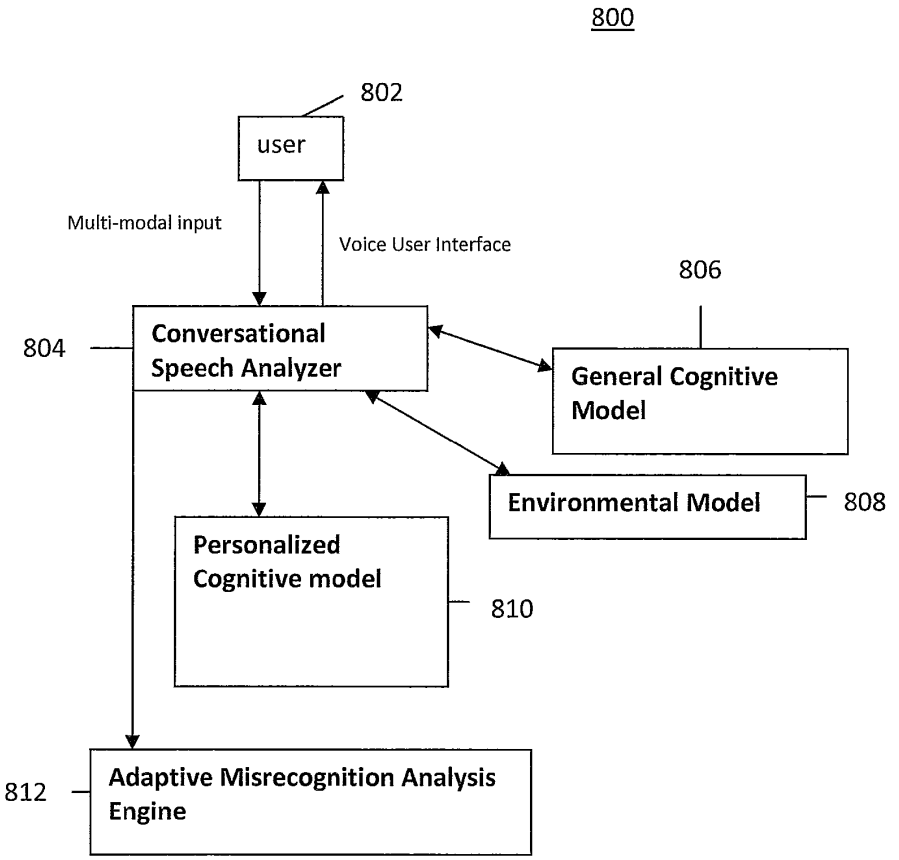
800
802
user
Multi-modal input
Voice User Interface
806
804
Conversational Speech Analyzer
General Cognitive Model
Environmental Model
808
Personalized Cognitive model
810
812
Adaptive Misrecognition Analysis Engine

FIGURE 8

MOBILE SYSTEMS AND METHODS OF SUPPORTING NATURAL LANGUAGE HUMAN-MACHINE INTERACTIONS

CROSS-REFERENCE TO RELATED APPLICATIONS

This application is a continuation of U.S. patent application Ser. No. 13/084,197, filed on Apr. 11, 2011 (which issued as U.S. Pat. No. 8,195,468 on Jun. 5, 2012), which is a divisional of U.S. patent application Ser. No. 11/212,693, entitled "Mobile Systems and Methods of Supporting Natural Language Human-Machine Interactions," filed Aug. 29, 2005 (which issued as U.S. Pat. No. 7,949,529 on May 24, 2011), the contents of which are hereby incorporated by reference in their entirety.

FIELD OF THE INVENTION

The invention provides mobile devices having a speech interface and/or a combination of a speech interface and a non-speech interface to enable natural language human-machine interactions. More specifically, the invention enables mobile users to submit natural language speech and/or non-speech questions or commands in a wide range of domains. The mobile device is configured to present responses in a natural manner.

BACKGROUND OF THE INVENTION

Telematic systems are systems that bring human-computer interfaces to mobile environments. Conventional computer interfaces use some combination of keyboards, keypads, point and click techniques and touch screen displays. These conventional interface techniques are generally not suitable for mobile environments, due at least in part to the speed of interaction and the inherent danger and distraction. Therefore, speech interfaces are being adopted in many telematic applications.

However, creating a natural language speech interface that is suitable for use in the mobile environment has proved difficult. A general-purpose telematics system should accommodate commands and requests from a wide range of domains and from many users with diverse preferences and needs. Further, multiple mobile users may want to use such systems, often simultaneously. Finally, most mobile environments are relatively noisy, making speech recognition inherently difficult.

Retrieval of both local and network hosted online information and processing of commands in a natural manner remains a difficult problem in any environment, especially a mobile environment. Cognitive research on human interaction shows that verbal communication, such as a person asking a question or giving a command, typically relies heavily on context and domain knowledge of the target person. By contrast, machine-based requests (a request may be a question, a command, and/or other types of communications) may be highly structured and may not be inherently natural to the human user. Thus, verbal communications and machine processing of requests that are extracted from the verbal communications may be fundamentally incompatible. Yet the ability to allow a person to make natural language speech-based requests remains a desirable goal.

Research has been performed on multiple fields of natural language processing and speech recognition. Speech recognition has steadily improved in accuracy and today is successfully used in a wide range of applications. Natural language processing has previously been applied to the parsing of speech queries. Yet, a limited number of systems have been developed that provide a complete environment for users to make natural language speech requests and/or commands and receive natural sounding responses in a mobile environment. There remain a number of significant barriers to creation of a complete natural language verbal and/or textual-based query and response environment.

The fact that most natural language requests and commands are incomplete in their definition is a significant barrier to natural language query-response interaction. Further, some questions can only be interpreted in the context of previous questions, knowledge of the domain, or the user's history of interests and preferences. Thus, some natural language questions and commands may not be easily transformed to machine processable form. Compounding this problem, many natural language questions may be ambiguous or subjective. In these cases, the formation of a machine processable query and returning of a natural language response is difficult at best.

Even once a question is asked, parsed and interpreted, machine processable requests and commands must be formulated. Depending on the nature of the question, there may not be a simple set of requests that return an adequate response. Several requests may need to be initiated and even these requests may need to be chained or concatenated to achieve a complete result. Further, no single available source may include the entire set of results required. Thus, multiple requests, perhaps with several parts, may need to be made to multiple data sources, which can be located both locally or remotely. Not all of these sources and requests may return useful results or any results at all.

In a mobile environment, the use of wireless communications may further reduce the chances that requests will be complete or that successful results will be returned. Useful results that are returned are often embedded in other information and may need to be extracted therefrom. For example, a few key words or numbers often need to be "scraped" from a larger amount of other information in a text string, table, list, page, or other information. At the same time, other extraneous information such as graphics or pictures may need to be removed to process the response in speech. In any case, the multiple results should be evaluated and combined to form the best possible answer, even in the case where some requests do not return useful results or fail entirely. In cases where the question is ambiguous or the result inherently subjective, determining the best result to present is a complex process. Finally, to maintain a natural interaction, responses should be returned rapidly to the user. Managing and evaluating complex and uncertain requests, while maintaining real-time performance, is a significant challenge.

These and other drawbacks exist in existing systems.

SUMMARY OF THE INVENTION

The invention overcomes these and other drawbacks of prior telematic systems.

According to one aspect of the invention, speech-based and non-speech-based systems are provided that act on commands and retrieve information. The invention uses context, prior information, domain knowledge, and user specific profile data to achieve a natural environment for users that submit requests and/or commands in multiple domains. At each step in the process, accommodation may be made for full or partial failure and graceful recovery. The robustness to partial failure may be achieved through the use of probabilistic and fuzzy

reasoning at several stages of the process. This robustness to partial failure promotes the feeling of a natural response to questions and commands.

According to another aspect of the invention, the interactive natural language system (herein "the system") may be incorporated into mobile devices or may be connected to the mobile device via a wired or wireless connection. The mobile device may interface with computers or other electronic control systems through wired or wireless links. The mobile device may also operate independently of a mobile structure and may be used to remotely control devices through a wireless local area connection, a wide area wireless connection or through other communication links.

According to one aspect of the invention, software may be installed onto the mobile device that includes an input module that captures the user input; a parser that parses the input, a text to speech engine module for converting text to speech; a network interface for enabling the device to interface with one or more networks; a non-speech interface module, an event manager for managing events and/or other modules. In some embodiments, the event manager may be in communication with a context description grammar, a user profile module that enables user profiles to be created, modified and/or accessed, a personality module that enables various personalities to be created and/or used, an agent module, an update manager and one or more databases. It will be understood that this software may be distributed in any way between a mobile device, a computer attached to a mobile structure, a desktop computer or a server without altering the function, features, scope, or intent of the invention.

According to one aspect of the invention, the system may include a speech unit interface device that receives spoken natural language requests, commands and/or other utterances from users, and a computer device or system that receives input from the speech unit and processes the input and responds to the user with a natural language speech response.

According to another aspect of the invention, the system may be interfaced by wired or wireless connections to one or more other systems. The other systems may themselves be distributed between electronic controls or computers that are attached to a mobile structure or are located external to the mobile structure. The other systems may include, electronic control systems, entertainment devices, navigation equipment, measurement equipment or sensors, or other systems. External systems may also be provided with features that include payment systems, emergency assistance networks, remote ordering systems, automated or attended customer service functions, or other features.

According to another aspect of the invention, the system may be deployed in a network of devices that share a common base of agents, data, information, user profiles, histories or other components. Each user may interact with, and receive, the same services and applications at any location equipped with the mobile device on the network. For example, multiple mobile devices may be placed at different locations throughout a home, place of business, vehicle or other location. In such a case, the system can use the location of the particular device addressed by the user as part of the context for the questions asked.

According to one embodiment of the invention, processing may be performed at the mobile devices. The commands may be processed on-board to enable the mobile devices to control themselves and/or to control other mobile devices, fixed computers, mobile telephones, and other devices. Additionally, mobile devices may track context.

According to one embodiment of the invention, infrastructure may be provided to maintain context information during multimodal interactions, such as speech and/or non-speech interactions. According to one exemplary embodiment of the invention, context information may be maintained in a multimodal environment by providing communication channels between mobile device, or multimodal devices, and the system. The communication channels allow the system to receive multimodal input such as text-based commands and questions and/or voice-based commands and questions. According to another embodiment of the invention, the multimodal input may include a string of text, such as keywords, that are received as commands or questions. According to yet another embodiment of the invention, the system may synchronize the context between the mobile devices and the speech-based units. In order to send a response to the corresponding mobile device, the system may track the source and send the response to the corresponding speech interface or the non-speech interface.

According to an alternative embodiment of the invention, context information may be maintained using a context manager that may be centrally positioned to receive input from multiple mobile devices and to provide output to multiple mobile devices. According to one embodiment, the mobile devices that communicate with the context manager may register through a registration module and may subscribe to one or more events. According to another embodiment of the invention, the context manager may receive input in Context XML form, for example. The other registered mobile devices may be informed of context changes through a context tracking module to enable synchronizing of context across the registered modules. According to one embodiment of the invention, registered modules may be added or removed from the system. The registered modules may include dynamic link libraries (DLLs), or other information sources, that are specific to multimodal devices.

According to yet another alternative embodiment of the invention, context information may be determined from a command or request that is presented in a textual format and/or a command or request that is presented as an utterance and processed using a multi-pass automatic speech recognition module that transcribes the utterance to a text message. The command or request may be compared against a context description grammar to identify a match. Any active grammars in the context description grammar may be scored against the command or request and a best match may be sent to a response generator module. Agents may be associated with corresponding response generator modules and may retrieve the requested information for generation of a response. The agents may update a context stack to enable follow-up requests.

According to another embodiment of the invention, mobile devices may be configured to allow verbal annotations of objects stored thereon. Mobile devices may transcribe the verbal annotation to text and store the textual annotation with the object. Alternatively, mobile devices may be configured to enable users to manually input textual descriptions that are stored along with the objects. According to one embodiment of the invention, the textual annotations and/or textual descriptions may be classified and searched. In an alternative embodiment, mobile devices may classify and search the verbal annotations rather than textual annotations. However, classifying and searching verbal annotations may be considerably more difficult than classifying and searching textual annotations and/or textual descriptions.

According to one embodiment of the invention, the textual annotations and textual descriptions may be communicated using a short message service on the mobile telephone or other device. Short message service is a text message service

that enables sending and receiving of short textual messages. The textual messages may be stored at data centers for forwarding to intended recipients. Other configurations may be used.

According to another aspect of the invention, domain specific behavior and information may be organized into data managers. Data managers are autonomous executables that receive, process and respond to user questions, queries and commands. The data managers provide complete, convenient and re-distributable packages or modules of functionality that are typically directed to a specific domain of applications. Data managers may be complete packages of executable code, scripts, links to information, and other forms of communication data that provide a specific package of functionality, usually in a specific domain. In other words, data managers may include components for extending the functionality to a new domain. Further, data managers and their associated data may be updated remotely over a network as new behavior is added or new information becomes available. Data managers may use system resources and the services of other, typically more specialized, data managers. Data managers may be distributed and redistributed in a number of ways including on removable storage media, transfer over networks or attached to emails and other messages. An update manager may be used to add new data managers to the system or update existing data managers.

In order to enhance the natural query and response environment, the system may format results to increase understandability to users. Formatting and presentation of results may be based on the context of the questions, the contents of the response being presented, the history of the interaction with the user, the user's preferences and interests and the nature of the domain. By contrast, rigid, highly formatted, or structured presentation of results may be deemed unnatural by many users.

According to another embodiment of the invention, the system may simulate some aspects of a human "personality". In some cases, the presentation of the response and the terms that are used to provide the response may be randomized to avoid the appearance of rigidly formatted or mechanical responses. The use of other simulated personality characteristics is also desirable. For example, a response that may be upsetting to the user may be presented in a sympathetic manner. Furthermore, results of requests may be long text strings, lists, tables or other lengthy sets of data. Natural presentation of this type of information presents particular challenges because simply reading the long response is generally not preferred. Instead, the system may parse important sections from the response and may initially provide only reports. Determining what parts of a long response are presented may be based on the context of the questions, the contents of the response being presented, the history of the interaction with the user, the user's preferences and interests and the nature of the domain. At the same time, the system may give the user interactive control over what information to present and how much information to present, to stop the response all together, or to take other actions.

The invention may be applied as a user interface to telematics systems in a wide variety of environments. These environments may include, but are not limited to, the following: 1) personal automobiles, rented automobiles, or fleet automobiles; 2) motorcycles, scooters, and other two wheeled or open-air vehicles; 3) commercial long-haul and short haul trucks; 4) delivery service vehicles; 5) fleet service vehicles; 6) industrial vehicles; 7) agricultural and construction machinery; 8) water-borne vehicles; 9) aircraft; and, 10) specialized military, law enforcement and emergency vehicles.

According to another aspect of the invention, the system may process and respond to questions, requests and/or commands. Keywords or context may be used to determine whether the received utterance and/or textual message includes a request or command. For example, utterances may include aspects of questions, requests and/or commands. For example, a user may utter "tune in my favorite radio station." A request is processed to determine the name, the channel, and time for the user's favorite radio station. If the programming on that station is of a type the user generally does not listen to, the system can suggest using an alterative option, such as listening to a CD more likely to please the user. A command must be executed to set a tune the radio station.

The invention can be used for generalized local or network information query, retrieval and presentation in a mobile environment. For each user utterance, including a question or query or set of questions or queries, the system may perform multiple steps possibly including: 1) capturing the user's question or query through speech recognition operating in a variety of real-world environments; 2) parsing and interpreting the question or query; 3) determining the domain of expertise required and the context to invoke the proper resources, including agents; 4) formulating one or more queries to one or more local and/or network data sources or sending appropriate commands to local or remote devices or the system itself; 5) performing required formatting, variable substitutions and transformations to modify the queries to a form most likely to yield desired results from the available sources; 6) executing the multiple queries or commands in an asynchronous manner and dealing gracefully with failures; 7) extracting or scraping the desired information from the one or more results, which may be returned in any one of a number of different formats; 8) evaluating and interpreting the results, including processing of errors, gathered and combine them into a single best result judged to be "best" even if the results are ambiguous, incomplete, or conflicting; 9) performing required formatting, variable substitutions and transformations to modify the results to a form most easily understood by the user; 10) presenting the compound result, through a text to speech engine or multimodal interface, to the user in a useful and/or expected manner; 11) optionally, providing a response to users indicating the success or failure of the command, and possibly including state information; or other steps.

The above steps may be performed with knowledge of the domain of expertise, the context for the question or command, domain specific information, the history of the user's interactions, user preferences, available information sources or commands, and responses obtained from the sources.

Probabilistic or fuzzy set decision and matching methods may be applied to deal with inconsistent, ambiguous, conflicting and incomplete information or responses. In addition, asynchronous queries may be used to provide rapid and graceful failure of requests or commands that allow the system to robustly return results quickly and in a manner that seems natural to the user.

Many everyday questions are inherently subjective and result in answers that are a matter of opinion or consensus, as much as fact. Such questions are often ad hoc in their nature, as well. The system, according to another aspect of the invention, may use adaptive, probabilistic, and fuzzy set decision and matching methods to identify the subjective nature of the question and to evaluate a range of possible answers, wherein one or more answers may be selected that most accurately represent the type of result desired by the user.

The context and expected results from a particular question may be highly dependent on the individual asking the question. Therefore, the system may create, store and use personal

profile information for each user. Information in the profile may be added and updated automatically as the user uses the system or may be manually added or updated by the user or by others. Domain specific agents may collect, store and use specific profile information, as may be required for optimal operations. Users may create commands for regularly used reports, automatically generated alerts, and other requests and for the formatting and presentation of results. The system may use profile data in interpreting questions, formulating requests, interpreting request results and presenting answers to the user. Examples of information in a user profile includes, history of questions asked, session histories, formatting and presentation preferences, special word spelling, terms of interest, special data sources of interest, age, sex, education, location or address, place of business, type of business, investments, hobbies, sports interests, news interests and other profile data.

According to one aspect of the invention, the system may attempt to provide rapid responses in order to provide a natural question and response environment. The rapid responses may be provided without obtaining additional information. The system may determine agent composition, context and/or domain for a user's question or command, for example, by using a real-time scoring system or other technique. Based on this determination, the system may trigger one or more agents to respond to the user's question or command. The agents may make one or more requests and rapidly return a formatted response. Thus, users may receive direct responses to a set of questions, each with a different response or context. In some cases, the available information, including the request results, may not adequately answer the questions presented. In such situations, the user may be asked one or more follow-up questions to resolve the ambiguity. Additional requests may then be made before an adequate response is provided. In these cases, the system may use context information, user profile information and/or domain specific information to minimize the interaction with the user required to deliver a response.

If the confidence level of the domain or context score is not high enough to ensure a reliable response, the system may request that the user verify that the question or command is correctly understood. In general, the question may be phrased to indicate the context of the question including all criteria or parameters. If the user confirms that the question is correct, the system may proceed to produce a response. Otherwise, either the user can rephrase the original question, perhaps adding additional information to remove ambiguity, or the system may ask one or more questions to attempt to resolve the ambiguity or other actions may taken.

According to one aspect of the invention, the system may accept any natural language question or command and, as a result, may be subject to ambiguous requests. To assist users in formulating concise questions and commands, the system may support a voice query language. The language may help users clearly specify the keywords or contexts of the question or command along with the parameters or criteria. The system may provide built in training capabilities to help the user learn the best methods to formulate their questions and commands.

In order to make the responses to user's questions and commands seem more natural, the system may employ one or more dynamically invokeable personalities and/or emotional models. Personalities and emotional models have specific characteristics that simulate the behavioral characteristics of real humans. Examples of these characteristics include sympathy, irritation, and helpfulness and associated emotions. The personality also randomizes aspects of responses, just as a real human would do. This behavior includes randomization of terms used and the order of presentation of information. Characteristics of the personality and/or emotions are invoked using probabilistic or fuzzy set decision and matching methods and using criteria, including the context for the question, the history of the user's interaction, user preferences, information sources available, and responses obtained from the sources.

According to another aspect of the invention, special procedures may be employed to present information in the form of long text strings, tables, lists or other long response sets. Simply presenting a long set of information in an ordered manner may not be considered natural or what most users have in mind. The system may use probabilistic or fuzzy set matching methods to extract relevant information and present these subsets first. Further the system may provide commands allowing users to skip through the list, find keywords or key information in the list or stop processing the list altogether.

According to one embodiment of the invention, the system may support multiple users that access the system at different times. According to another embodiment of the invention, the system may support multiple users that access the system during a same session, in an interleaved or overlapping manner. The system may recognize the multiple users by name, voice, or other characteristic and may invoke a correct profile for each user. If multiple users are addressing the system in overlapping or interleaved sessions, the system may identify the multiple users and may invoke one or more corresponding profiles. For applications that require security safeguards, the multiple users may be verified using voiceprint matching, password or pass-phrase matching, or other security safeguards.

When multiple users are engaged in interleaved sessions, the system may gracefully resolve conflicts using a probabilistic or fuzzy set decision method for each user. This process may simulate the manner in which a human would address multiple questions from various sources. For example, the system may answer short questions first in time while answering longer questions later in time. Alternatively, the system may answer questions in the order that they are received, among other configurations.

Since the invention may operate in many environments, including mobile environments with background noise, point noise sources and people holding conversations, filtering of speech input may be advantageous. The invention may use, for example, either one-dimensional or two-dimensional array microphones (or other devices) to receive human speech. The array microphones may be fixed or employ dynamic beam forming techniques. The array pattern may be adjusted to maximize gain in the direction of the user and to null point noise sources. Alternatively, microphones may be placed at particular locations within the mobile environment near where occupants are likely to use the system. These microphones can be single microphones, directional microphones or an array of microphones. Speech received at the microphones may then be processed with analog or digital filters to optimize the bandwidth, cancel echoes, notch-out narrow band noise sources, or perform other functions. Following filtering, the system may use variable rate sampling to maximize the fidelity of the encoded speech, while minimizing required bandwidth. This procedure may be particularly useful in cases where the encoded speech is transmitted over a wireless network or link.

The invention can be applied to a wide range of telematics applications. General applications areas can include, but are not limited to remote or local vehicle control, information query, retrieval and presentation from local or network sources, safety applications, and security applications.

The system may provide local or remote control functions for the system, including devices that are located on the mobile structure or off the mobile structure. Users may initiate commands locally or remotely. Typically, remote operation may be conducted through an IP connection, a telephone connection, or other connections. The user may address spoken commands to a mobile device or desktop unit, which may send the commands to controllers on the vehicle over wireless links. Other remote command techniques may be used. The system may process commands in a nearly identical manner to a request. One difference being that the result of the command is generally an action rather than a response. In many cases, the system may give the user a cue or response to indicate that the command has been successfully executed or has failed. In cases of failure, an interactive session may be started to allow the user to resolve the difficulty or formulate a command more likely to succeed.

The invention provides users, including mobile structure operators, with the capability to control most any mobile system functions using interactive speech and non-speech commands and/or requests. Generally, controls of a critical nature, or having safety implications, may employ fail-safe checks that, before execution, verify that a command will not create a hazardous condition. Manual overrides may also be provided as an extra precaution. The invention may provide built in help and user guidance for the devices under control. This guidance may include step-by-step training for operators that are learning to use the features of the mobile structure. The system can provide extensive interactive guidance when commands cannot be executed or when commands fail. This advice may include suggestions to reformulate the command to succeed, suggestions to work around a failure, suggestions for alternative commands that may achieve a similar function, or other suggestions. Examples of control functions that can be performed from local or remote locations by the invention include:

1. Control of mobile structure multimedia entertainment electronics, such as radio, CD player, or video player. This control can be based on user specified play lists and may be sensitive to user profile information including, preferences history, or other information. The invention may include the ability to control multiple or individual multimedia entertainment stations.
2. Control of communications devices such as cell phones, voice mail systems, fax systems, text or instant messaging systems, call and message forwarding systems, email systems and other communication devices. This control includes controlling features such as, address books, phone books, call forwarding, conference calling, and voice mail, among others.
3. Local or remote control of mobile structure systems. Most any device on the mobile structure may be controlled including, door locks, window controls, interior temperature controls, shifting of the transmission, turn signals, lights, safety equipment, engine ignition, cruse control, fuel tank switches, seat adjustments, specialized equipment such as winches, lifting systems or loading systems, and other mobile structure systems.
4. Systems that are located external to the mobile structure typically may be controlled through wireless links including, garage door openers, gate controllers, mobile structure entry security passes, automated toll collection systems, and mobile structure weighing systems and other external systems.
5. Mobile structure power management and systems control. The invention may provide the mobile structure operator with information on limitations and on tips for better power management or fuel utilization or other systems control.
6. Diagnostic information management. The invention may provide diagnostic information announcements and warnings for the mobile structure operator. These announcements and warnings may be interactive allowing the operator to request additional information or to suggest various courses of action. The invention may mediate a solution to the problem, including providing access to a scheduling service, summoning help or providing instructions for remedial action until a permanent solution can be achieved. The system can ask the operator to authorize the ordering of needed parts and may provide cost estimates. The system may receive data for these announcements and warnings from a wide range of sources including sensors and vehicle control computers. Sensors may include fuel level sensors, coolant temperature sensors, oil temperature sensors, axle temperature sensors, tire pressure sensors, and other sensors.
7. System status inquiry. Mobile structure operators may use the interactive natural language interface of the invention to query and receive reports on the status of systems that are located on the mobile structure including, fuel level, interior temperature, outside temperature, engine or other mobile structure system status. The operator can further query the system to receive more information or determine a course of action if problem is detected.
8. Vehicle service history. The invention can provide the vehicle operator or other personnel with interactive access to the vehicle service history. The invention can provide announcements or warnings as the time for service draws near. The user can interact with the system to schedule the required service, order required parts, receive cost estimates, or update the service history. Users may customize the nature of this interaction to suit their desires or policies.
9. Diagnostic and service history. The invention may provide diagnostic and service history information to service personnel. This information may include vehicle fault codes and other information for devices that are under control of or measured by the system. Alternatively, the invention may receive information on the state and history of vehicle operation from other control computers. The invention may provide interactive service information and history. The service history may be queried and presented through the speech interface or the non-speech interface. The system may prompt service personnel for more information if the record is deemed incomplete. In other cases, the invention may prompt service personnel for information on their actions if a change is detected in system status, such as replacement of a part.

The invention can provide users or operators of a mobile structure with specialized safety functions through the interactive speech interface and/or non-speech interface. The invention may use a dynamically evocable personality that is capable of creating announcements that are appropriate for the severity of the situation. The announcements and personalities may be under user control and configuration. Some examples of these safety applications can include:

1. The invention can provide automated detection and reporting of accident situations through the wireless communications link. Information on an accident situation can be gathered from airbag control systems or other sensors. Once an accident situation has been detected the

invention may use the interactive speech interface and/or non-speech interface to determine the nature of the accident and/or the condition of victims. This information, along with location information and other relevant information, may be reported over the wireless link. Alternatively, the invention may establish voice channel communications or other communications between occupants of the vehicle and emergency personnel.

2. The invention can be used to store and retrieve medical information on vehicle occupants. Following an accident, emergency personnel may query the system for this information. Alternatively, the system may annunciate a warning to emergency personnel if a person has a special medical condition. The system maintains the security of medical information through a number of techniques, including not annunciating medical information unless an accident is detected, or not annunciating medical information unless that person or another authorized person gives permission.
3. Occupants of the vehicle can summon help in the event of a crime using the speech interface and/or non-speech interface. Typical crimes may include robberies and hijackings. The invention allows vehicle occupants to set panic or emergency words or phrases that indicate to the system a crime is occurring.
4. The invention can provide the vehicle operator with safety announcements if an unsafe or potentially unsafe situation is detected. The operator can use the interactive speech interface and/or non-speech interface to obtain more information on the situation or dismiss the alert. The operator can annunciate or otherwise provide commands to remedy or mitigate the situation during this dialog. Conditions that can be announced include, following another vehicle too closely, too great a speed for the road or conditions, obstruction on roadway, a fire in some part of the vehicle, high cargo pressure or temperature, leaks, and other information.
5. The interactive speech interface and non-speech interface of the invention can provide the operator with real-time assistance. This assistance may include, aid in parking or backing a vehicle, aid with complex maneuvers, aid with optimal operation of the vehicle, and other operations. The operator can ask the system for advice or assistance with a planned maneuver or operation. Alternatively, the invention can proactively offer assistance if certain situations are detected.
6. The interactive speech interface and non-speech interface may be used to improve vehicle security. Voiceprints or voice authentication can be used to gain access to the vehicle or start the vehicle. Alternatively or in addition, a password or pass-phrase can be used. In another alternative speech security can be used as a supplement to other vehicle security techniques.
7. The invention can provide measurement of operator fatigue and alert the operator or remote personnel if unacceptable levels of fatigue are detected. The interactive speech interface and/or non-speech interface can be used to query the operator to detect fatigue. Alternatively, or in addition, other measurements of operator fatigue can be used. If a fatigue situation is detected the invention may initiate a dialog with the operator to determine the extent of the problem and if required, ask the operator to cease operation.

The invention can offer vehicle operators and occupants a variety of services that are useful while in the vehicle and/or while arriving at a destination. Further, users can employ the interactive natural language interface to customize these services to suit each individual. Some examples of services that can be supported by the natural-language interactive speech interface of the invention, include:

1. Providing vehicle operators with interactive directions to a destination or waypoint, wherein the user can specify a desired destination and any preferred waypoints. A destination can be specified in any manner including providing the name of a place, an address, a name of a person, a name of a business, or other type of information. As the trip progresses the system may provide the operator with continued directions and warnings if a mistake has been made. The operator can query the system for additional information or request less information. Generally, the system is interfaced with one or more navigation sensors and local or remote map databases. The invention may provide operators or passengers with alerts of upcoming points or interest, exits or stops, hazards, or other conditions. The users can query the system for more specific information. Alternatively, the invention can provide operators and occupants of the vehicle with an interactive guided tour. The system's information query, retrieval and presentation capability can be employed by users to receive additional information or points or items of interest during the tour and may take into account stored personal profile information for a user.
2. The invention can provide the operator of a vehicle with interactive dynamic routing information. The routing can be updated based on traffic conditions, weather conditions, facilities availability, and information provided by the operator. Generally, the system is interfaced with one or more navigation sensors, local or remote map databases, and sources of traffic, weather, and facilities use data.
3. The direction, routing and communications capabilities of the invention can be combined in an interactive system that helps one or more operators rendezvous at a predetermined destination or any other convenient midpoint. The operators may use the interactive natural language interface to communicate with the system to arrange the rendezvous, to receive directions as they travel to the rendezvous point and/or to communicate with the other operators.
4. The navigational capabilities of the invention may be used to place limits on where a vehicle is allowed to go and/or for how long. The system may employ the interactive natural language speech interface and/or non-speech interface to inform the operator when the vehicle is approaching or has exceeded a limit. The operator can query the system to determine the best course of action to return to limits or prevent exceeding them. Alternatively, the system can query the operator to determine why they are exceeding the limits or to mediate a negotiation to extend the limits if this is required by circumstances. This capability is useful in several situations including, keeping a delivery or passenger vehicle on a regular route, setting and enforcing use limits on teenagers, preventing an operator from using the vehicle in an unauthorized manner, or other situations.
5. The interactive natural language interface of the invention can be used to provide Customer Relationship Management (CRM) services to vehicle operators and passengers. The user can interact with the services offered via data networks, video signals, or audio. The interaction can be performed with automated services or a live Customer Service Representative. Interactions with the customer service representatives can be through any

combination of possible techniques, such as, live audio, live video, electronic messaging or email, instant messaging, and other techniques. These services can be offered by a number of entities including, vehicle manufacturers, vehicle dealers, vehicle service organizations, automobile or travel clubs, wireless carriers, travel service organizations, or other organizations. The services offered can be personalized to the occupants of the vehicle using a variety of information including, user profile information, history, location, paths traveled, time of day, day of week, or other information. In addition, the system can offer customized services based on information about the vehicle, including paths traveled, distance, service history, type of equipment on vehicle. These services can be accessed while a person is an occupant in a vehicle, while the person is not an occupant but are using a wireless or wired network equipped mobile device or while using a wired or wireless network desktop system, among other situations. Examples of these services include:

a. Location based marketing programs wherein occupants of the vehicle receive promotional offers from merchants along a route of travel. Occupants can query the system for offers and promotions for goods, services, or other information, along the travel route. The system may apply other available information to form a response, including, the user profile, history, location, or other information. The system can provide optimized interactive routing assistance to the vehicle operator. Alternatively, the system can provide interactive offers and promotions for goods and services along the route, or in advance of a particular trip. Promotions can be offered for goods and services can include but are not limited to, travel services, groceries, prepared foods, vehicle service, fuel, entertainment, or other goods and services.

b. Remote ordering and payment for goods and services. The system can interactively present the menu or product catalog using the list and table presentation capabilities of the invention. The system may facilitate remote ordering by using location information, customer preferences, customer order history, etc. The system can manage a secure payment wallet for the users. Voiceprints, spoken passwords, and non-speech security methods (i.e. PIN pad, etc.) can be combined to create the appropriate level of security.

c. Travel services for occupants of the vehicle. These services can include, directories of travel and entertainment services, or reservations for entertainment restaurants, hotels and other accommodation. The system may present directories, lists and menus using its interactive list and table presentation capabilities. The travel service capability can be used in conjunction with the remote ordering and payment capabilities and the dynamic interactive routing capability.

d. Answer specialized travel related questions in areas such as vehicle registration, taxes, safety laws, required inspections, weight limits, insurance coverage requirements, insurance policy provisions, or other areas.

6. The invention can provide an operator or other occupant of a vehicle with an interactive location sensitive shopping list or a location and time sensitive task reminder list using the natural language interface. Users can create the list while in the vehicle, while on foot using a mobile device, or at a fixed location using a handheld or desktop device. A user may grant permission to other users to add tasks or shopping items to their lists. Once in the vehicle, the system may provide occupants with routing assistance to optimize travel time and may provide reminders of items to be purchased and tasks to be completed as the vehicle comes in close proximity to a particular location, type of merchant or other service provider, or when a set time has been reached, among other criteria.

7. Automatic interactive dispatch and reporting for fleet vehicles having vehicle operators or other vehicle occupants that use the speech interface and/or non-speech interface to interact with these services. These services can include, dynamic optimal routing, inventory of parts and other materials, ordering of required parts and materials, work orders, receipt generation, payments, or other services.

8. Sales force automation, sales reporting, contact database management, calendar management, and call routing. The system may employ its interactive list and table presentation capabilities to supply catalog and pricing information or other information. These services can use local or network data. Additional services can include, memos, reminders, activity lists, or other information.

Vehicle operators and other occupants can use the interactive natural language interactive interface of the invention to perform many types of information query, retrieval and presentation operations. Using the natural language interactive interface, users can modify the parameters of queries or specify the presentation formats for results. Data used to create a response can be from any combination of local and remote data sources. User specific data can be synchronized between systems fixed to one or more vehicles, mobile structures and desktop systems. Some examples of information query, retrieval and presentation applications for the invention include, but are not limited to the following:

1. White pages and yellow pages lookups to find, email addresses, telephone numbers, street addresses and other information for businesses and individuals. These services can be used in conjunction with other services, including remote ordering and payment, offers and promotions, mapping, and driving directions;
2. Management and access to personal address book, calendars and reminders for users;
3. Automatic telephone dialing, reading and sending emails, pages, instant messaging by voice, text or video and other communications control functions;
4. Selection, schedules and play list management for television, satellite broadcast, radio or other entertainment schedule. The available information can include reviews and other information on programming. The system may provide device control for users;
5. Weather information for the local area or other locations;
6. Stock and other investment information including, prices, company reports, profiles, company information, business news stories, company reports, analysis, price alerts, news alerts, portfolio reports, portfolio plans, or other information;
7. Local, national and international news information including headlines of interest by subject or location, story summaries, full stories, audio and video retrieval and play for stories;
8. Sports scores, news stories, schedules, alerts, statistics, background and history information, or other information;
9. The ability to subscribe interactively to multimedia information channels, including sports, news, business,

different types of music and entertainment, applying user specific preferences for extracting and presenting information;

10. Rights management for information or content that is used or published;
11. Horoscopes, daily jokes and comics, crossword puzzle retrieval and display and related entertainment or diversions;
12. Interactive educational programs using local and network material, with lesson material level that is set based on user's profile, location of the vehicle, planned route of the vehicle, planned activities during the trip and including, interactive multimedia lessons, religious instruction, calculator, dictionary and spelling, geographic information, instruction for specialized tasks planned during the trip, language training, foreign language translation, presentation of technical manuals, and encyclopedias and other reference material.

It will be appreciated that the foregoing statements of the features of the invention are not intended as exhaustive or limiting, the proper scope thereof being appreciated by reference to this entire disclosure and reasonably apparent variations and extensions thereof.

BRIEF DESCRIPTION OF THE DRAWINGS

The invention will be described by reference to the preferred and alternative embodiments thereof, in conjunction with the drawings in which:

FIG. **1** is an overall block diagram of the system according to a first embodiment of the invention;

FIG. **2** is an overall block diagram of the system according to a second embodiment of the invention;

FIG. **3** is an overall block diagram of a mobile device according to an embodiment of the invention;

FIG. **4** is an overall block diagram of a fixed computer according to an embodiment of the invention;

FIG. **5** is an overall diagrammatic view of the interactive natural language processing system according to an embodiment of the invention;

FIG. **6** is a schematic block diagram showing the agent architecture according to an embodiment of the invention;

FIG. **7** illustrates a diagram for centrally maintaining context, according to one embodiment of the invention; and

FIG. **8** illustrates a system diagram for an enhanced conversational voice user interface according to one embodiment of the invention.

DETAILED DESCRIPTION

The following detailed description refers to the accompanying drawings, and describes exemplary embodiments of the invention. Other embodiments are contemplated and modifications may be made to the exemplary embodiments without departing from the spirit, functionality and scope of the invention. Therefore, the following detailed descriptions are not meant to limit the invention.

According to one embodiment of the invention, a telematic natural language speech interface and non-speech interface are provided for use in mobile environments and telematic applications. The system, or portions thereof, may be used in vehicles, while on foot or at a fixed location such as an office or home, or at other locations. An overall block diagram of one embodiment of the invention is illustrated in FIG. **1**.

A speech unit **128** and/or a keypad **14** may be integrally coupled to a mobile structure **10** or may be part of mobile devices **36**, fixed home or office computer systems **44**, or other devices. Mobile devices **36** may include mobile telephones, personal digital assistants, digital radios, compact disk players, navigation systems, or other mobile devices. The mobile devices **36** may be configured to integrate with set-top boxes, alarm clocks, radios, or other electronic components. The speech unit **128** and/or keypad **14** may be interfaced to a Telematics Control Unit (TCU) **28** through one or more data interfaces **26**. According to some embodiments, the main speech-processing unit **98** may be embedded in one or more TCU **28**. In some embodiments, the components of the speech unit **128** may also be distributed between one or more TCUs.

A speech-processing unit may be built into mobile devices **36** and may be coupled with the data interfaces **26** though a wireless, or wired, handheld interface **20**. Other user interface peripherals may be connected to the TCU through the data interfaces and may include displays **18**, such as touch screen displays for displaying text, graphics and video; keypads **14** for receiving textual data input; video cameras **16** for receiving multimedia communications or conferences; a pointing device or stylus, or other user interface peripherals. Other devices may be connected to the TCU through the data interfaces including wide-area RF transceivers **24**, navigation system components **22**, or other devices. The navigation system may include several components such as, Global Positioning System (GPS) receivers or other radiolocation system receivers, gyroscopes or other inertial measurement equipment, distance measurement sensors, such as odometers, or other components. Radiolocation equipment may receive coded signals from one or more satellites or terrestrial sources **40**. The one or more location service servers **48** may assist the navigation system. Other systems that can connect to the TCU through the data interfaces may include automotive control computers, digital control interfaces for devices such as media players or other electronic systems, measurement sensors, or other specialized electronic equipment.

The control and device interfaces **30** may connect the TCU **28** to various devices **32** within the mobile structure **10**. The control and device interfaces **30** may be used to execute local or remote commands from users of the natural language interface. In some cases, the control and device interfaces **30** may include specialized hardware for interacting with different types of devices. The hardware interfaces may include analog or digital signal interfaces for device control, along with analog or digital interfaces for measurements that may control devices **32**. These interfaces may also include specialized software that encapsulates or abstracts specific behavior of the devices **32**. The interface software may include one or more drivers that are specific to the hardware interface and to one or more agents. The domain agents may include the specialized software behavior and data required to control a particular device or class of devices. New or updated behavior may be added to the system by updating data managers that are associated with specific devices or class of devices. The devices **32** may include manual controls or manual overrides **34**. For safety reasons, the control and device interfaces **30** may incorporate fail-safe systems that, for example, may verify operating limits before changing settings, ensuring that commands do not conflict with settings from manual controls, and will not, in some combination with other commands or device settings, create an unsafe situation. The software behavior and data that ensures safe operations may be included within the domain agent that is specific to the device or class of devices. Examples of devices and system that can be controlled through the control and device interfaces **30** include, power management systems, measurement sensors, door locks, window controls, interior temperature controls,

shifting of the transmission, turn signals, lights, safety equipment, engine ignition, cruise control, fuel tank switches, seat adjustments, specialize equipment such as winches, lifting systems or loading system, and other systems.

The wide-area RF transceiver **24** may communicate with one or more wide-area wireless networks **38**, which may be connected to data networks **42**, including the Internet, the Public Switched Telephone Network (PSTN) **42** or other data networks. The wide-area wireless networks can be of any suitable terrestrial or satellite based type. Mobile devices **36** may communicate with one or more local or wide-area wireless networks. Home or office systems **44**, equipped with wired or wireless network interfaces, may communicate through the data networks or PSTN.

According to one embodiment of the invention, data and agents may be stored and synchronized in mobile structures **10**, mobile devices **36** and/or fixed systems **44** having one or more main speech-processing units **98**. The synchronization between these different systems can occur on the wide area wireless network **38**, the data network **42**, through the handheld interface **20**, or other local data connections. The synchronization may be performed automatically when any two or more of the computers are connected to these networks. Alternatively, the synchronization may be performed on demand under user control. The synchronization process attempts to determine which version of a data element or an agent are the newest or most up-to-date and propagates that element. Thus, synchronization is an incremental change processes. In some cases, a complete replacement of a database, a portion of the database or of one or more agents may be performed rather than performing a series of incremental updates.

The wide-area wireless networks **38**, the data networks **42** or PSTN, may connect mobile structures **10**, mobile devices **36** and fixed computers **44** to one or more servers that provide one of more services. According to one embodiment of the invention, an interactive natural language user interface may be provided that supports a transfer of data or transmission of speech, text, video and other formats. For data centric applications, a standardized data transfer format may be used including, for example, Hypertext Markup Language over Hypertext Transfer Protocol (HTTP), Extensible Markup Language (XML), and other data formats or schemas, over HTTP or other transfer protocol, Electronic Data Interchange formats over a variety of transport protocols, etc. It will be understood that the exact configuration of the servers may be determined on a case-by-case basis with consideration being given to the exact combinations of services being offered, the service providers providing the services, the contractual relationships between the service provider, and other factors. The invention supports any suitable configuration. In each case these servers may themselves be distributed over one or more public or private networks. Some examples of servers that may be used to deliver these services, are given below:

1. One or more payment service providers **56** that supply payment capabilities to users. These payment services may include electronic wallet capabilities for one or more payment accounts and may include payment security information, payment account information, transaction histories, account balance information, and other information. Exemplary payment types include, stored value accounts, promotional accounts, credit accounts, telecommunications billing accounts, debit accounts, or other payment types that are accessed using online or offline methods. Payments can be computed in any manner including payment for a specific good or service, subscription payment, metered payment, or other payments. The payment services can be distributed in a number of ways. Examples of computers and servers used to store and process payment transaction information include, smart cards, main speech processing units **128**, mobile devices **36**, TCUs **28**, fixed personal computers **44**, payment gateways, payment servers **56**, or other systems.
2. One or more Customer Relationship Management (CRM) systems **52** may supply any number of consumer and business customer services as discussed above. The CRM system can supply automated services or services that are partly or completely manual. For manual services one or more customer service representatives may use one or more service representative workstations **54**. The CRM system and the service representative workstation may be connected to one or more data networks **42** or the PSTN. Any other servers may also have connections to one or more service representative workstations, which may be in common or independent of each other.
3. One or more specialized service servers **50** may support specialized consumer and business services.
4. One or more location service servers **48** may supply location information and location based services. The location data is used as a data input to the location services that may then be distributed in any suitable manner including, on main speech processing units **128**, mobile devices **36**, TCUs **28**, fixed personal computers **44**, other servers (i.e. **46**, **50**, **52**, **56**) or the one or more location services servers **48**.
5. One or more emergency services servers **46** may supply both public and private emergency services to the users.

Main speech processing unit **98**, speech unit **128** and keyboard **14** may be distributed in mobile devices **36** in a number of ways. For example, these units may be attached to the mobile devices **36** as independent components or as a single integrated component. In another embodiment of the invention, some or all of the main speech processing unit **98** and speech unit **128** may be embedded in one or more of the TCUs **28**, mobile devices **36**, fixed computer systems **44**, or other devices.

FIG. **2** illustrates an alternative block diagram of a second embodiment of the invention. In this embodiment, the main speech processing unit **98** and speech unit **128** are external to the TCU **28**. These components may be housed in one or more packages or may be included in a single integrated package.

In all other respects, the second embodiment resembles the first embodiment illustrated in FIG. **1**. It will be understood that the exact distribution and packaging of the main speech processing unit **98** and speech unit **128** may be determined by the details of the deployment situation and should not change the functionality, capabilities or spirit of the invention in any way.

FIG. **3** illustrates a block diagram of one embodiment of the mobile devices **36** that include main speech processing unit **98** and speech unit **128** embedded in the mobile device **36**, mobile telephone or other mobile device. The main speech processing unit may interface to one or more processing units **70** located in the mobile device **36**. The processing units **70** may include one or more central processing units, one or more data and address busses, data interfaces, volatile memory, or other components. The processing units **70** may use one of more types of nonvolatile memory **80** for software and data storage. Suitable types of nonvolatile memory **80** may include flash memory and hard disk drives. In some embodiments, the main speech processing unit **98** may be integrated with the one or more processing units **70**.

According to one embodiment, users may interact with the mobile device **36** through the speech unit **128**, the keypad **74** or keyboard, a display **72** that displays text, graphics, video, or other peripheral. In some embodiments the display may be a touch screen type. Alternatively, a pointing device (not shown) may be used, among other devices.

The mobile device **36** may connect to one or more wired or wireless wide-area or local-area networks through one or more interfaces. A wide-area network transceiver **78** may connect to the wide-area wireless network **38** or the data network **42** using a wireless or wired connection, including an IP connection, a dial-up PSTN network connection or other connections. The local-area network transceiver **76** may connect to wired or wireless local area networks. These networks may include the handheld interface **20** or connections to fixed computer systems **44**. In both mobile device environments and fixed computer environments, communications between humans and machines may not provide accurate results at least because natural language commands may be incomplete in their definition. The occurrence of inaccurate results may be reduced by leveraging context of previous utterances, knowledge of the domain and/or the user's history of interests and preferences or other factors.

According to one embodiment of the invention, processing may be performed at the mobile devices **36**. Alternatively, the processing may be performed on the server side. In yet another embodiment, the processing may occur on both the mobile devices **36** and the server side. The commands may be processed on-board the mobile devices **36** to enable the mobile devices **36** to control themselves and/or to control other mobile devices **36**, fixed computers **44**, mobile telephones, or other devices. Additionally, mobile devices **36** may track context. According to another embodiment of the invention illustrated in FIG. **7**, a context manager **702** may be centrally maintained to allow input to and output from multiple mobile devices **36**. Each of the mobile devices may communicate with the context manager **702** to register via registration module **712**, wherein registration may indicate events that the mobile devices **36** may subscribe to. The context manager **702** may receive input in Context XML form, for example. The other registered mobile devices **36** may be informed of context changes through context tracking module **714**, thereby synchronizing the context across the registered mobile devices **36**. According to one embodiment of the invention, registered mobile devices **36** may be added or removed. The registered mobile devices **36** may be dynamic link libraries (DLLs), object code, or other data that may be specific to the mobile device **36**.

According to yet another alternative embodiment of the invention, context information may be determined from a command or request that is presented as a text message and/or a command or request that is presented as a verbal utterance and processed using a multi-pass automatic speech recognition module that transcribes the verbal utterance to a text message. The multi-pass automatic speech recognition module may use a dictation grammar or a large vocabulary grammar, among other resources, to transcribe the verbal utterance into a text message. On platforms where a dictation grammar is not available, the multi-pass automatic speech recognition may use a virtual dictation grammar that uses decoy words for out-of-vocabulary words. Decoy words may include utility words, nonsense words, isolated syllables, isolated distinct sounds and other decoy words.

According to one embodiment of the invention, the text message may be searched for a particular character, group of characters, word, group of words, and other text combinations. The text combination may be compared against entries in a context description grammar that is associated with each agent **106**. If a match is identified between an active grammar in the context description grammar and the command and/or request, then the match may be scored. The agents **106** may be ranked based on the determined score. In generating an aggregate response from the one or more responses received from the agents **106**, the ordering of the responses from the individual agents may be determined based on the rank of agents **106**. The aggregate response may be generated by a response generator module. Agents **106** may update a context stack, that includes an ordered list of command contexts, to enable follow-up requests.

According to another embodiment of the invention, if a match is not found, or only a partial match is found, between the text message and active grammars, then a knowledge-enhanced speech recognition system may be used to semantically broaden the search. The knowledge-enhanced speech recognition system may be used to determine the intent of the request and/or to correct false recognitions. The knowledge-enhanced speech recognition may access a set of expected contexts that are stored in a context stack to determine a most likely context. The knowledge-enhanced speech recognition may use context specific matchers that are able to identify context such as time, location, numbers, dates, categories (e.g., music, movies, television, addresses, etc.) and other context. The matching may be performed by comparing a character, group of characters, a word, group of words, and other text combinations. Alternatively, or in addition to text based matching, the matching may be performed using phonetic matching, among other techniques. The results of any match may be used to generate a command and/or request that is communicated to agents **106** for additional processing. According to one embodiment of the invention, non-speech interface **114** may show system, state and history information in a more concise manner than is possible through the speech interface. Non-speech interface **114** may be accessed to create or extend capabilities of agents **106**. These operations may include scripting of agents, adding data to the agent or databases **102** used by the agent, adding links to information sources, among other operations.

According to another embodiment of the invention, mobile devices **36** may be configured to allow speech annotations of objects stored thereon. The objects may include photographs, calendar entries, email messages, instant messages, phonebook entries, voice mail entries, digital movies or other objects. Mobile devices **36** may transcribe the speech annotations to textual annotations and store the textual annotations with the object. Alternatively, mobile devices **36** may be configured to enable users to input non-speech annotations, such as textual descriptions, that are stored along with the objects.

According to one embodiment of the invention, the annotated objects may be stored on a server side, a client side, a combination of server side and client side, or according to other configurations. The invention further contemplates collaboratively exchanging and sharing the annotated objects among distributed workgroups that may include centralized servers having shared workspaces for providing common object storage and retrieval facilities. The shared workspaces may be implemented on the centralized servers and may be accessed from different platforms using the mobile devices **36**. The system may include a peer-to-peer system for accessing the annotated objects.

According to one embodiment of the invention, the non-speech annotations may be classified and searched. In an alternative embodiment, the speech annotations may be classified and searched. However, classifying and searching

speech annotations may be considerably more difficult than classifying and searching non-speech annotations.

According to another embodiment of the invention, the textual annotations and/or textual descriptions that are associated with the objects may be stored as metadata, thereby enabling searching for the objects using the metadata. The metadata may include GPS information, environmental information, geographic information, or other information. For example, proximity to famous landmarks may be determined using GPS information, environmental information, geographic information, or other information, and this information may be integrated into the metadata associated with the objects. According to one embodiment of the invention, GPS coordinates may be stored in the metadata associated with the objects and users may search for selected objects based on the GPS coordinates. A user may provide a speech command such as "show me all the photos of Greece." In this case, the system would limit the type of object to photographs and would determine the GPS coordinates of Greece. The system would then search the metadata for objects that correspond to photographs and that also satisfy GPS coordinates for Greece. According to another embodiment of the invention, including GPS coordinates in the metadata of objects enables post-processing of the objects based on the GPS coordinates. For example, the objects may be subjected to an initial sort based on generalized GPS coordinates that are stored in the metadata and may be subjected to additional sorting based on more particular criteria for the GPS coordinates. Thus, a user may initially search for object metadata that corresponds to a location near a famous landmark and may use image matching to label the objects with the searchable metadata (i.e., textual descriptions). For example, using the GPS coordinates stored in the metadata, users may first determine that photographs were taken at the Jefferson Memorial and may use this information to label the photographs with searchable metadata (i.e., textual descriptions) including "photo of the Jefferson Memorial." One of ordinary skill in the art will readily appreciate that metadata may include various types of information and may be searched using the various types of information.

According to one embodiment of the invention, the textual annotations may be communicated using a short message service on the mobile telephone or other device. Short message service is a text message service that enables sending and receiving of short textual messages. The textual messages may be stored at data centers for forwarding to intended recipients. Other configurations may be used.

According to another embodiment of the invention, the mobile devices **36** may support multi-modal communications that enable displaying of non-speech search results on a graphical interface and receipt of speech commands to provide a follow-up search, among other configurations. For example, the user may be presented with textual search results corresponding to a name of a famous person and the user may provide a speech command to find a biography of the famous person. The system may maintain the context of the textual search results to find the biography associated with the famous person. By contrast, known systems may perform a follow-up search on the term "biography" and may present a dictionary definition of the term "biography."

FIG. **4** illustrates an embodiment that uses a fixed computer **44**. In some embodiments, the main speech processing unit **98** and speech unit **128** may be embedded into the fixed computer **44**. The main speech processing unit may interface with one or more processing units **84** that are associated with the fixed computer. The processing units may include one or more central processing units, one or more data and address busses, data interfaces, volatile memory, or other components. The processing unit may use one of more types of nonvolatile memory **94** for software and data storage. Suitable types of nonvolatile memory include, for example, flash memory and hard disk drives. In some embodiments, the main speech processing unit **98** may be integrated with the one or more processing units **84**. According to one embodiment of the invention, processing may be performed at the fixed computers **44**. The commands may be processed onboard to enable the fixed computers **44** to control themselves and/or to control other fixed computers **44**, mobile devices **36**, mobile telephones, or other devices. Additionally, fixed computers **44** may track context as described above.

According to another embodiment of the invention, fixed computers **44** may be configured to allow verbal annotations of objects stored thereon. Fixed computers **44** may transcribe the verbal annotation to text and store the textual annotation with the object. Alternatively, fixed computers **44** may be configured to enable users to manually input textual descriptions that are stored along with the objects. According to one embodiment of the invention, the textual annotations and/or textual descriptions may be classified and searched. In an alternative embodiment, fixed computers **44** may classify and search the verbal annotations rather than textual annotations. However, classifying and searching verbal annotations may be considerably more difficult than classifying and searching textual annotations and/or textual descriptions.

In another embodiment of the invention, users may interact with fixed computers **44** using speech unit **128**, the keyboard **88** or keypad, a display **86** for displaying text, graphics, video, or other peripherals. According to some embodiments of the invention, the display may be a touch screen type. Alternatively, a pointing device (not shown) may be used, along with other devices. Fixed computers **44** may be coupled to one or more wired or wireless wide-area or local-area networks through one or more interfaces. A wide-area transceiver **92** may connect to the wide-area wireless network **38** or the data network **42**, using a wireless or wired connection, including an IP network, a dial-up PSTN network connection, or other connections. The local-area network transceiver **90** may connect to wired or wireless local area networks. These networks may include connections to mobile devices **36**.

In order for devices to properly respond to requests and/or commands that are submitted in a natural language form, machine processable requests and/or algorithms may be formulated after the natural form questions or commands have been parsed and interpreted. Algorithms describe how the machines should gather data to respond to the questions or commands. Depending on the nature of the requests or commands, there may not be a simple set of requests and/or algorithms that will return an adequate response. Several requests and algorithms may need to be initiated and even these requests and algorithms may need to be chained or concatenated to achieve a complete response. Further, no single available source may contain the entire set of results needed to generate a complete response. Thus, multiple requests and/or algorithms, perhaps with several parts, may be generated to access multiple data sources that are located both locally or remotely. Not all of the data sources, requests and/or algorithms may return useful results or any results at all. Useful results that are returned are often embedded in other information and may need to be extracted from the other information. For example, a few key words or numbers may need to be "scraped" from a larger amount of other information in a text string, table, list, page, video stream or other information. At the same time, extraneous information including graphics or pictures may be removed to process the

response. In any case, the multiple results must be evaluated and combined to form the best possible response, even in cases where some requests do not return useful results or fail to produce results entirely. In cases where the command is determined to be ambiguous or the result is inherently subjective, determining the results to present in the response is a complex process. Finally, to maintain a natural interaction, responses should be returned to the user rapidly. Managing and evaluating complex and uncertain requests, while maintaining real-time performance, is a significant challenge.

The invention provides a complete speech-based command generation, information query, retrieval, processing and presentation environment or a combination of speech-based and non-speech-based command generation, information query, retrieval, processing and presentation environment for telematic applications. In addition, the invention may be useful for controlling the system itself and/or external devices. This integrated environment makes maximum use of context, prior information and domain and user specific profile data to achieve a natural environment for one or more users submitting requests or commands in multiple domains. Through this integrated approach, a complete speech-based natural language command, algorithm and response environment or a combination of speech-based and non-speech-based command, algorithm and response environment may be created.

The telematic natural language interface may be deployed as part of, or a peripheral to a TCU or other mobile devices **36**, as part of a mobile device interfaced to vehicle computers and other mobile system through wired, wireless, optical, or other types of connections or fixed computers interfaced to the vehicle computers or other systems through a combination of wired, wireless, optical and/or other types of connections. Alternatively, the components of the interactive natural language telematic interface may be distributed in any suitable manner between these multiple computing platforms.

FIG. **5** illustrates one exemplary schematic diagram view of a system **90** according to an embodiment of the invention. The system **90** may include a main unit **98**, speech units **128**, and multi-modal devices **155**. In an alternative embodiment, the system **98** may include completely separate systems for main unit **98**, speech units **128** and multi-modal devices **155**. The event manager **100** may mediate interactions between components of main unit **98**. The event manager **100** provides a multi-threaded environment allowing the system **98** to operate on multiple commands or questions from multiple user sessions, without conflict, and in an efficient manner to maintain real-time response capabilities.

FIG. **8** illustrates one exemplary embodiment of an enhanced conversational user interface **800** that receives multi-modal input from users **802** and communicates with a conversational speech analyzer **804**. The conversational speech analyzer **804** may be coupled to several components, including a general cognitive model **806**, an environmental model **808**, a personalized cognitive model **810**, and an adaptive misrecognition analysis engine **812** or other components. According to one embodiment of the invention, the conversational speech analyzer **804** may include one or more speech recognition engines that transcribe utterances to textual messages. The transcription may be performed using one or more conversational grammars, a context description grammar **112**, or other transcription methods. According to one embodiment of the invention, data that is entered in a text format may be merged with data that is transcribed to a textual format from the utterance. Conversational speech analyzer **804** also may include a semantic knowledge-based model that analyzes the textual message and detects command components.

According to one embodiment of the invention, personalized cognitive model **810** is a model derived from a user's interaction pattern with the system and may be used to predict what actions the user may take next in time, thus assisting with speech recognition and/or question or command recognition. Personalized cognitive model **810** may track actions performed by the user. When the system is attempting to predict user behavior, the personalized cognitive model may be consulted first. The system may have multiple personalized cognitive models, wherein one may correspond to each user.

According to another embodiment of the invention, general cognitive model **806** is a statistical abstract that corresponds to interaction patterns with the system for multiple users. Data stored within general cognitive model **806** may be used to predict a user's next action, thus assisting with speech recognition and/or question or command recognition. The general cognitive model **806** may also track what actions a particular user has performed and may be used when the user interacts with the system in a way that is not handled in the personalized cognitive model.

According to one embodiment of the invention, the environmental model **808** may include information associated with the user's environment and surroundings. The information may include the type of environment that a user is in (e.g., quiet or noisy); details of a microphone and/or speaker system; the user's current global position and movement, as may be determined by GPS; current system status, such as what song/movie is playing, is the system in the midst of retrieving something, or other system status; details on all voice-enabled devices in the immediate vicinity, such as a presence of a voice-enabled TV, stereo, and DVD player in the same room; a user's credit card information, such as numbers and current balances, wherein the user may ask a mobile telephone to download and pay for a video and the system may respond that there are insufficient funds; or other information. The information may be accessed to invoke a context, domain knowledge, preferences, and/or other cognitive qualities that enhance the interpretation of questions and/or commands.

The conversational speech analyzer **804** may also access the general cognitive model **806** and/or the personalized cognitive model **810** to further refine a context, domain knowledge, preferences, and/or other cognitive qualities to enhance the interpretation of questions and/or commands. Based on information received from general cognitive model **806**, environmental model **808** and/or the personalized cognitive model **810**, the system may enhance responses to commands and questions by including a prediction of user behavior.

Adaptive Misrecognition Analysis Engine **812** may analyze and store textual messages, including transcribed utterances, that are identified as being unrecognized or incorrectly recognized by conversational speech analyzer **804**. Upon a determination that text is unrecognized, the system may generate an unrecognized event. For example, an unrecognized event may result from not finding a match to text and/or the transcribed utterance.

According to one embodiment of the invention, the system may implement one or more techniques to determine that textual messages are incorrectly recognized. For example, the user may command the system to play a specific song title and the system may misrecognize the requested song title and provide a song having a different title, the system may misrecognize an incorrect song title and provide a song having a different than requested title, the system may misrecognize a correct song title and provide a song having an invalid song title, among other variations. When the system misrecognizes a request, the user typically provides immediate feedback

such as, overriding the command in a time shorter than the expected execution time of the command, repeating the original request, issuing a stop command, or taking other action, wherein the action may be presented verbally, non-verbally by pushing a selected button on a cell phone or remote control, or both, among other configurations. According to one embodiment of the invention, the system may detect the user action and may prompt the user to re-phrase the request to enable the system to modify words in the query. The user's actions may be analyzed in a statistical model to determine a frequency occurrence of misrecognitions for particular commands, with the results being used to update the corresponding personalized cognitive model **810**.

According to another embodiment of the invention, the conversational speech analyzer **804** may access the personalized cognitive model **810** to proactively select a next best (or nth best) match for the received text. A match may be confirmed by user action that include the user not immediately canceling the command or taking other action. The misrecognitions may also be analyzed to potentially determine personalized tuning parameters for the speech recognition components of the system. For example, the system may, over time, tune the speech recognition engine to increase recognition by analyzing how the speech recognition engine misrecognizes the utterance.

The event manager **100** may mediate interactions between other components of the invention. The event manager can provide a multi-threaded environment allowing the system to operate on multiple commands or questions from multiple user sessions without conflict and in an efficient manner, maintaining real-time response capabilities.

Agents **106** may include a collection of grammars, criteria handlers, and algorithms that are accessible to respond to a set of requests and/or commands. Agents **106** may further contain packages of both generic and domain specific behavior for the system **98**. Agents **106** may use nonvolatile storage for data, parameters, history information, and locally stored content provided in the system databases **102** or other local sources. One or more user profiles **110** may be provided that include user specific data, parameters, and session and history information for determining the behavior of agents **106**. One or more personality modules **108** may be provided in a data determining system that include personality characteristics for agents. The update manager **104** manages the automatic and manual loading and updating of agents **106** and their associated data from the Internet **146** or other network through the network interface **116**.

According to one embodiment of the invention, the speech-based interface for the system **90** may include one or more speech units **128**. Speech units **128** may include one or more microphones, for example array microphone **134**, to receive the utterances from the user. The speech received at the microphone **134** may be processed by filter **132** and passed to the speech coder **138** for encoding and compression. In one embodiment, a transceiver module **130** may transmit the coded speech to the main unit **98**. Coded speech received from the main unit **98** is detected by the transceiver **130**, then decoded and decompressed by the speech coder **138** and annunciated by the speaker **136**.

According to one embodiment of the invention, the non-speech-based interface for the system **90** may include one or more multi-modal devices **155** that may include mobile devices, stand alone or networked computers, personal digital assistances (PDAs), portable computer devices, or other multi-modal devices.

The speech units **128**, multi-modal devices **155** and the main unit **98** may communicate over a communication link. The communication link may include a wired or wireless link. According to one embodiment, the communication link may comprise an RF link. The transceiver **130** on the speech unit may communicate coded speech data bi-directionally over the communication link with the transceiver **126** on the main unit **98**. According to another embodiment, the RF link may use any standard local area wireless data protocols including the IEEE 802.11, Bluetooth or other standards. Alternatively, an infrared data link conforming to any suitable standard such as IrDA or other infrared standards can be used. In an alternative embodiment, wires may connect the speech unit **128** and the main unit **98**, eliminating the need for one speech coder **138**. Other wired or wireless analog or digital transmission techniques can be used.

According to one embodiment of the invention, coded speech received at the transceiver **126** on the main unit **98** is passed to the speech coder **122** for decoding and decompression. The decoded speech may be processed by the speech recognition engine **120** using the context description grammar module **112**, among other information. Any recognized information may be processed by the parser **118**, which transforms information into complete algorithms and questions using data supplied by knowledge agents. Knowledge agents may be selected from the plurality of agents **106** using a grammar stack, wherein the knowledge agents provide information for generating a response to the question or command. The knowledge agents may then process the commands or questions by creating requests that are submitted to local databases **102** or submitted through the network interface **116** to external data sources over the Internet **146** or external other networks. Algorithms typically result in actions taken by the system **90** itself (i.e., pause or stop), or to a remote device or data source (i.e., download data or program, or control a remote device), through the network interface to the Internet or other data interface.

According to one embodiment of the invention, knowledge agents may return results of questions as responses to users. The responses may be created using the results of information requests, the system personality **108**, the user preferences, other data in the user profile **110**, and/or other information. Agents **106** may present these results using the speech unit **128**. The agents **106** may create a response string, which is sent to the text to speech engine **124**. The text to speech engine **124** may generate the utterances, which may be encoded and compressed by the speech coder **122**. Once coded, the utterances are transmitted from the main unit **98** by the transceiver **126** to the transceiver **130** on the speech unit **128**. The utterance is then decoded and decompressed by the speech coder **138** and output by the speaker **136**. Alternatively, agents **106** may present the results using multi-modal devices **155**.

The non-speech interface **114** may be part of, or separate from, the multi-modal devices **155** and may be used as a substitute or complement to the speech interface. For example, non-speech interface **114** may be used to present and interact with non-speech (e.g., graphical or tabular) information in a manner more easily understood by the user. According to one embodiment of the invention, multimodal support may be provided to maintain the context during both voice interaction and interaction through the non-speech interface **114**. In one exemplary embodiment, a communication channel may be opened between multimodal devices **155** and the main user interface system **90** to allow multimodal devices **155** to input text commands and questions. According to another embodiment of the invention, multimodal devices **155** may send a string of text or keywords for a command or question. The main interface system **90** may synchronize the context between multimodal device **155** and the speech units

128. In order to send a response to the corresponding device, the main user interface system 90 may track where the input came from so that the response may be sent to a TTS or multi-modal device 155.

According to one embodiment of the invention, non-speech interface 114 may show system, state and history information in a more concise manner than is possible through the speech interface. Non-speech interface 114 may be accessed to create or extend capabilities of agents 106. These operations may include scripting of agents, adding data to the agent or databases 102 used by the agent, adding links to information sources, among other operations.

According to another embodiment of the invention, system 90 may include different types of agents 106. In some embodiments of the invention, generic and domain specific behavior and information may be organized into domain agents 156. The system agent, on the other hand, may provide default functionality and basic services. The domain specific agents may provide complete, convenient and re-distributable packages or modules for each application area. In other words, the domain agents may include data that is needed to extend or modify the functionality of the system 90 in a current or new domain. Further, domain agents and their associated data can be updated remotely over a network as new behavior is added or new information becomes available. Domain agents may access a plurality of sources that may provide various services. Domain agents may use the services of other, typically more specialized, data managers and system agent. Agents are distributed and redistributed in a number of ways including on removable storage media, transfer over networks or attached to emails and other messages. The invention may provide license management capability allowing the sale of data managers by third parties to one or more users on a one time or subscription basis. In addition, users with particular expertise can create data managers, update existing data managers by adding new behaviors and information and making these data managers available to other users. A block diagram of the agent architecture according to an embodiment of the invention is shown in FIG. 6.

Agents 106 may receive and return events to the event manager 100. Both system agents 150 and domain agents 156 may receive questions and commands from the parser 118. Based on keywords in the questions and commands and the structures of the questions and commands, the parser may invoke selected agents. Agents use the nonvolatile storage for data, parameters, history information and local content provided in the system databases 102.

According to one embodiment of the invention, when the system starts-up or boots-up, the agent manager 154 may load and initialize the system agent 150 and the one or more domain agents 156. Agent manager 154 includes knowledge of agents 106 and maps agents 106 to the agent library 158. At shutdown, the agent manager may unload the agents 106. The agent manager 154 also performs license management functions for the domain agents 156 and content in the databases 102.

The system agent 150 manages the criteria handlers 152 that handle specific parameters or values (criteria) used to determine context for questions and commands. According to one embodiment of the invention, criteria handlers 152 include parsing routines that are specialized to recognize particular parts of speech, such as times, locations, movie titles, and other parts of speech. The criteria handlers 152 may identify matching phrases and extract semantic attributes from the phrases. Both the system agent 150 and the domain agents 156 may use the criteria handlers 152. The various domain agents 156 may use the services of the system agent 150 and of other, typically more specialized, domain agents 156. The system agent 150 and the domain agents 156 may use the services of the agent library 158, which contains utilities for commonly used functions. According to one embodiment of the invention, the agent library may be a dynamic link library that implements one or more agents. The agent library may include utilities for text and string handling, network communications, database lookup and management, fuzzy and probabilistic evaluation, text to speech formats, and other utilities.

Domain agents 156 may be data-driven, scripted or created with compiled code. A base of generic agent may be used as the starting point for data-driven or scripted agents. Agents created with compiled code are typically built into dynamically linkable or loadable libraries. Developers of agents can add new functionality to the agent library 158 as required. Details of agent distribution and update, and agent creation or modification are discussed in sections below.

According to another embodiment of the invention, capabilities are provided to distribute and update system agents 150, domain agents 156, agent library 158 components, databases 102, and context description grammar 112 over wireless or wired networks 136, including IP networks and dial-up networks using the update manager 104. The network interface 116 may provide connections to one or more networks. The update manager 104 may also manage the downloading and installation of core system updates. The agent manager 154 may perform license management functions for the domain agents and the databases. The update manager 104 and agent manager 154 may perform these functions for all agents and database content including, agents and content available to all users or agents and/or content available to selected users. Examples of agent and database components added or updated on a periodic basis include:

- agents for new domains;
- additional domain knowledge for agents;
- new keywords for a domain, which can include names of politicians, athletes, entertainers, names of new movies or songs, etc. who have achieved recent prominence;
- links to a preferred set of information sources for the domains covered including links for, entertainment, news, sports, weather, etc.;
- updates to domain information based on, for example, changes to tax laws, company mergers, changing political boundaries;
- updates to content, including dictionaries, encyclopedias and almanacs; and
- other content and database components.

When a user requires or selects a new domain agent 156 or database element 102, the update manager 104 may connect to their source on the network 146 though the network interface 116, download and install the agent or data. To save system resources and to comply with any license conditions, the update manger 104 may uninstall agents that are no longer in use. In one embodiment of the invention, the update manager 104 may periodically query one or more sources of the licensed agents and database components to locate and download updates to agent executables, scripts or data as they become available. Alternatively, the agent sources may initiate the downloading of agent updates of the registered or licensed agents to the update manager as they become available.

The agent manager 154 may provide license management clients that are capable of executing most any license terms and conditions. When a particular agent 106 and/or database element 102 is selected based on a submitted command, the agent manager 154 verifies that the use of the agent or data

element is within the allowed terms and conditions, and if so, invokes the agent or allows access to the data element. License management schemes that can be implemented through the agent manager **154** include outright purchase, subscription for updates, one time or limited time use. Use of shared agents and data elements (such as those down-loaded from web sites maintained by groups of domain experts) may also be managed by the agent manager **154**.

If questions or commands do not match an agent that is currently loaded on the system, the agent manager **154** may search the network **146** through the network interface **116** to find a source for a suitable agent. This process may be triggered, for example, when a query is made in a domain for which an agent is not available, when a new device is added to a mobile structure, or when the behavior of a mobile device is updated. Once located, the agent can be loaded under the control of the update manager **104**, within the terms and conditions of the license agreement, as enforced by the agent manager.

New commands, keywords, information, or information sources can be added to any domain agent **156** by changing agent data or scripting. These configuration capabilities may allow users and content developers to extend and modify the behavior of existing domain agents **156** or to create new domain agents **156** from a generic agent without the need to create new compiled code. Thus, the modification of the domain agents **156** may range from minor data-driven updates by even the most casual users, such as specifying the spelling of words, to development of complex behavior using the scripting language as would typically be done by a domain expert. The user can create and manage modifications to domain agents **156** through speech interface commands or using non-speech interface **114**. User-specific modifications of domain agents **156** are stored in conjunction with the user's profile **110** and accessed by the domain agent **156** at run-time.

The data used to configure data driven agents **156** may be structured in a manner to facilitate efficient evaluation and to help developers with organization. This data is used not only by the agent, but also in the speech recognition engine **120**, the text to speech engine **124**, and the parser **118**. Examples of some major categories of data include:

1. Content packages may include questions or commands. Each command or question or group of commands or questions may include contexts used for creation of one or more requests. The domain agent **156** may pass a context description grammar expression to the parser **118** for evaluation of a context or question. An initial or default context is typically supplied for each command or question. The command or question includes a grammar for the management and evaluation of the context stack.
2. Parameters and other operating data on devices that are under control of the natural language speech interface. The domain agent **156** may use this data and parameters to determine how to execute a command, how to formulate the command string for the parser **118**, determine if the command is feasible, and determine if the command can be executed within safety and operating limits.
3. Page lists or pointers to other local or network content sources. For each page or content source, there may be a pointer (e.g. URL, URI, or other pointer) to the page or source. Each page may have specific scraping information used to extract the data of interest. The scraping information may include, for example, matching patterns, HTML or other format parsing information.
4. A response list, determining the response of the domain agent **156** to a particular command or question given the context, the user profile and the information retrieved. Responses may include diagnostic error messages or requests for more information if the question or command cannot yet be resolved from the known information. Responses can be based on or be dependent on thresholds or probabilistic or fuzzy weights for the variables.
5. Substitution lists that include variable substitutions and transformations, often applied by the agents **150**, **156** in the formatting of requests and results. For example, a stock domain specific agent **156** would use a substitution list of company trading symbols, company names and commonly used abbreviations. Substitutions and transformations can be performed on commands and questions to create precise queries, which can be applied against one or more information sources or to results for creating more meaningful output to the user. Substitution lists also include information for optimally dealing with structured information, such as HTML formatted page parsing and evaluation.
6. Personalities used for responses. Personalities can be constructed by combining multiple traits in a weighted manner. Weights can be specified for each agent's domain area to create one or more specific personalities. Examples of personality traits include, sarcasm, humor, irritation, and sympathy, and other traits.
7. Public and user specific parameters for sources, substitutions, transformations, variables or criteria. The public parameter lists are part of the agent package **156**. The user specific parameters are included in the user profile **110**.

Commands and questions are interpreted, requests formulated, responses created and results presented can be based on the user's personal or user profile **110** values. Personal profiles may include information specific to the individual, their interests, their special use of terminology, the history of their interactions with the system, domains of interest, or other factors. The personal profile data can be used by the agents **106**, the speech recognition engine **120**, the text to speech engine **124**, and the parser **118**. Preferences can include, special (modified) commands, past behavior or history, questions, information sources, formats, reports, alerts or other preferences. User profile data can be manually entered by the user and/or can be learned by the system based on user behavior. User profile values can include: 1) spelling preferences; 2) date of birth for user, family and friends; 3) income level; 4) gender; 5) occupation; 6) location information such as, home address, neighborhood, and business address, paths traveled, locations visited; 7) vehicle type or types; 8) vehicle operator certifications, permits or special certificates; 9) history of commands and queries; 10) telecommunications and other service providers and services; 11) financial and investment information; 12) synonyms (i.e., a nick name for someone, different terms for the same item); 13) special spelling; 14) keywords; 15) transformation or substitution variables; 16) domains of interest; or, 17) other values.

End users may use the data driven agent **156** extension and modification facilities and values stored in user profiles **110** to create special reports, packages of queries, alerts and output formats. A single alert or report can be configured to use multiple data sources and other variables (i.e., time, location, measured value) value to determine when alerts should be sent. For example, an alert can be generated by sampling a stock price every 15 minutes and sending an alert if the price drops below some value. In another example, an alert may be generated when a particular condition or combination of con-

ditions occur for the vehicles. Alerts and reports can be directed to a local or remote output.

To create a report, the user may first specify a set of commands or questions. Next, the user can create or select a format for the report. Finally the user may name the report. A report can have variable parameters. For example, a user may create a company stock report and execute the report by stating its name and the company name, which gives the user selected information in a specified format for that company. In another example, a user can create a "morning" report, which presents selected multimedia information from different sources (news, sports, traffic, weather) in the order and formats desired. In yet another example, the user can create a report on the status of one or more vehicle systems. Alerts and reports can be created using only voice commands and responses, commands and responses through the graphical user interface **114**, or a combination of the two. Reports can be run locally or remotely with respect to the vehicle. To create a report, alert, or other specialized behavior, the user performs a number of steps including: 1) specifying the command to run a report or alert; 2) specifying the question or questions, including keywords, used for a query; 3) setting the criteria for running the report such as on command or when a particular condition is met; 4) defining preferred information sources; 5) defining preferences for order of result evaluation by source, value, and other parameters; 6) specifying the presentation medium for a report or alert, such as an email, the text to speech engine, a message to a pager, or a text and graphics display; and, 7) specifying the preferred format for the report, such as information to be presented, order of information to be presented, preferred abbreviations or other variable substitutions.

Filtering and noise elimination may be important in facilitating the various functionalities of system **90** and may improve operation in noisy mobile environments. Recognition and parsing of the user's speech is implemented with good signal to noise ratio at the input to the speech recognition engine **120**. To provide acceptable results, a set of acoustic models, an array microphone **134**, a filter **132**, or other components, may be employed. If a good signal to noise ratio cannot be achieved, a noise identification algorithm may be used and the appropriate acoustic model, for example, one that has been trained in conditions similar to the identified noise, may be selected. According to one embodiment of the invention, the microphone array, filters and speech coder **138** are physically separated from the main unit **98** into a speech unit **128**, and connected using a wireless link. Since bandwidth on a wireless connection is at a premium, the speech coder dynamically adapts the digitization rate and compression of the captured speech.

Some embodiments of the invention may use one or more arrays of microphones **134** to provide better directional signal capture and noise elimination than can be achieved with a single microphone. The microphone array can be one-dimensional (a linear array) or two-dimensional (a circle, square, triangle or other suitable shape). The beam pattern of the array can be fixed or made adaptive though use of analog or digital phase shifting circuitry. The pattern of the active array is steered to point in the direction of the one or more users speaking. At the same time, nulls can be added to the pattern to notch out point or limited area noise sources. The use of the array microphone also helps reduce the cross talk between output from the text to speech engine **124** through the speaker **136** or from another user talking and detection of the user's speech.

The invention may use an analog or digital filter **132** between the array microphone or conventional microphone **134** and the speech coder **138**. The pass band of the filter can be set to optimize the signal to noise ratio at the input to the speech recognition engine **120**. In some embodiments, the filter is adaptive, using band shaping combined with notch filtering to reject narrow-band noise. One embodiment employs adaptive echo cancellation in the filter. The echo cancellation helps prevent cross talk between output from the text to speech engine and detection of the user's speech as well as suppression of environmentally caused echoes. Algorithms comparing the background noise to the signal received from the users speech may be used to optimize the band-shaping parameters of the adaptive filter.

The speech received by the array microphone **134** and passed through the filter **132** may be sent to the speech digitizer or coder **138**. The speech coder may use adaptive lossy audio compression to optimize bandwidth requirements for the transmission of the coded speech to the speech recognition engine **120** over a wireless link. The lossy coding is optimized to preserve only the components of the speech signal required for optimal recognition. Further, the lossy compression algorithms that may be used are designed to prevent even momentary gaps in the signal stream, which can cause errors in the speech recognition engine. The digitized speech may be buffered in the coder and the coder may adapt the output data rate to optimize the use of the available bandwidth. The use of the adaptive speech coder is particularly advantageous when a band-limited wireless link is used between the coder and the speech recognition engine.

The microphone can be complemented with an analog or digital (i.e., Voice over IP) speech interface. This interface allows a remote user to connect to the system and interact with it in the same manner possible if they were physically present.

In an alternative embodiment, the array microphone can be replaced by a set of physically distributed microphones or headsets worn by the users. The distributed microphones can be placed in different parts of a vehicle, different parts of a room or in different rooms of a building. The distributed microphones can create a three-dimensional array to improve signal to noise ratio. The headset can use a wireless or wired connection.

While the invention is intended to be able to accept most any natural language question or command, ambiguity may be a problem. To assist users formulate concise questions and commands, the system can support a voice query language. The language may be structured to allow a variety of queries and commands with minimal ambiguity. Thus, the voice query language helps users clearly specify the keywords or contexts of the question or command along with the parameters or criteria. The language can provide a grammar to clearly specify the keyword used to determine the context and present a set of one or criteria or parameters. A user asking a question or stating a command in the voice query language may nearly always be guaranteed to receive a response.

The voice query language may be sensitive to the contents of the context stack, wherein a context defines a set of questions that can be activated or deactivated during a conversation. According to one embodiment, each agent may designate one context to be the root context that defines base algorithms that the agent implements. Thus, follow-on questions can be asked using an abbreviated grammar, since key words and criteria can be inherited from the context stack. For example, the user can simply ask about another keyword if the criteria of the question remain constant.

The system **90**, may provide built in training capabilities to help users learn the best methods to formulate their questions and commands. The interactive training allows users to audi-

bly or visibly see the machine interpretation of their queries and provides suggestions on how to better structure a query. Using the interactive training, users can quickly become comfortable with the voice query language and, at the same time, learn how to optimize the amount of information required with each step of a dialog.

The output of the speech coder **122** may be fed to the speech recognition engine **120**. The speech recognition engine **120** recognizes words and phrases, using information in the context description grammar **112** and passes these to the parser **118** for interpretation. The speech recognition engine **120** may determine the user's identity by voice and name for each utterance. Recognized words and phrases may be tagged with this identity in all further processing. Thus, as multiple users engage in overlapping sessions, the tags added by the speech recognition engine **120** to each utterance allows other components of the system **90** to tie that utterance to the correct user and dialog. The user recognition capability may further be used as a security measure for applications, such as auctions or online shopping, where this is required. Voice characteristics of each user may be contained in the user profile **110**.

According to one embodiment of the invention, users may start a dialog with the system **90** when they first address it. This can be done by speaking a generic word ("computer") or addressing a specific name ("Fred"), which may be generally tied to a system personality **108**. Once the user starts the dialog, it may be recognized by the speech recognition engine **120**, using unique characteristics of the user's speech. At the end of a dialog or to interrupt a dialog, the user may utter a dismissal word ("good bye").

According to another embodiment of the invention, the system **90** may employ a speech recognition engine **124** that gains improved word recognition accuracy using data from context description grammar **112**, user profiles **110**, and the agents **106**, among other components. At the same time, the fuzzy set possibilities or prior probabilities for the words in the context description grammar may be dynamically updated to maximize the probability of correct recognition at each stage of the dialog. The probabilities or possibilities may be dynamically updated based on a number of criteria including the application domain, the questions or commands, contexts, the user profile and preferences, user dialog history, the recognizer dictionary and phrase tables, and word spellings, among other criteria.

For uncommon words or new vocabulary words, the user may be given the option to spell the words. The spelling can be done by saying the names or the letters or using a phonetic alphabet. The phonetic alphabet can be a default one or one of the user's choosing.

Alternatively, when a user submits a word that is not recognized at all or is not correctly recognized by the speech recognition engine **120**, then the user may be asked to spell the word. The speech recognition engine **120** determines this condition based on confidence level for the scoring process. The word may be looked up in a dictionary and the pronunciation for the word is added to either the dictionary, the agent **106**, or the user's profile **110**. The word pronunciation can then be associated with the domain, the question, the context and the user. Through this process, the speech recognition engine learns with time and improves in accuracy. To assist users in spelling words, an individualized phonetic alphabet can be used. Each user can modify the standard phonetic alphabets with words, which they can remember more easily.

Once the words and phrases have been recognized by the speech recognition engine **120**, the tokens and user identification may be passed to the parser **118**. The parser examines the tokens for the questions or commands, context and criteria. The parser may determine a context for an utterance by applying prior probabilities or fuzzy possibilities to keyword matching, user profile **110**, dialog history, and context stack contents. The context of a question or command may determine the domain and, thereby, the domain agent **156**, if any, to be invoked. For example, a question with the keywords "temperature" implies a context value of weather for the question. Within a different dialog, the keyword "temperature" can imply a context for a measurement. The parser dynamically receives keyword and associated prior probability or fuzzy possibility updates from the system agent **150** or an already active domain agent **156**. Based on these probabilities or possibilities the possible contexts are scored and the top one or few are used for further processing.

The parser **118** uses a scoring system to determine the most likely context or domain for a user's question and/or command. The score is determined from weighing a number of factors including, the user profile **110**, the domain agent's data content and previous context. Based on this scoring, the system **90** invokes the correct agent. If the confidence level of the score is not high enough to ensure a reliable response, the system **90** may ask the user to verify whether the question and/or command is correctly understood.

In general, the question that is asked by the system **90** may be phrased to indicate the context of the question including all criteria or parameters. For example, the question can be in the form of: "Did I understand that you want such-and-such?" If the user confirms that the question is correct the system proceeds to produce a response. Otherwise, the user can rephrase the original question, perhaps adding additional information to remove ambiguity, or the system can ask one or more questions to attempt to resolve the ambiguity.

Once the context for the question or command has been determined, the parser **118** can invoke the correct agent **156**, **150**. To formulate a question or command in the regular grammar used by agents, the parser will preferably determine required and optional values for the criteria or parameters. These criteria may have been explicitly supplied by the user or may need to be inferred. The parser may make use of the criteria handlers **152** supplied by the system agent. The criteria handlers can provide context sensitive procedures for extracting the criteria or parameters from the user's question or command. Some criteria may be determined by executing algorithms in the agent, while others may be determined by applying probabilistic or fuzzy reasoning to tables of possible values. Prior probabilities or fuzzy possibilities and associated values may be received from a number of sources including, for example, the history of the dialog, the user profile **110**, and the agent. Based on user responses, the prior probabilities or fuzzy possibilities may be updated as the system learns the desired behavior. For a weather context, examples of criteria include, location, date and time. Other criteria can include command criteria (i.e., yes/no, on/off, pause, stop), and spelling. Special criteria handlers are available from the system agent for processing lists, tables, barge-in commands, long strings of text and system commands.

The criteria handlers **152** can operate iteratively or recursively on the criteria extracted to eliminate ambiguity. This processing may help reduce the ambiguity in the user's question or command. For example, if the user has a place name (or other proper noun) in their utterance the parser **118** can use services of the domain agent **156** to look up tables in the databases **102** for place names or can attempt to determine which word is the proper noun from the syntax of the utterance. In another example, the user asks, "what about flight one hundred and twenty too?" The parser and domain agent

use flight information in the database and network information along with context to determine the most plausible interpretation among; flight **100** and flight **20** also, flight **100** and flight **22**, flight **122**, etc.

Once the context and the criteria are determined, the parser **118** may form the question or command in a standard format or hierarchical data structure used for processing by the agents **150**, **156**. The parser **118** may fill in all required and some optional tokens for the grammar of the context. Often the tokens must be transformed to values and forms acceptable to the agents. The parser obtains the required transformations from the agents, dialog history or user profile **110**. Examples of transformations or substitutions performed by the parser on tokens include: 1) substituting a stock symbol for a company name or abbreviation; 2) substituting a numerical value for a word or words; 3) adding a zip code to an address; and, 4) changing a place or other name to a commonly used standard abbreviation.

The agents **150**, **156** may receive a command or question once the parser **118** has placed it in the required standard format. Based on the context, the parser can evoke the correct agent to process the question or command.

Commands can be directed to the system or to an external entity. System commands are generally directed to the system agent **150**. Commands for external entities are generally processed by a domain agent **156**, which includes the command context and behavior for the external entity.

Specific questions may be generally directed to one of the domain agents **156**. The real-time selection of the correct agent allows the invention to dynamically switch contexts. Based on the question, command or context and the parameters or criteria, the domain agent may create one or more queries to one or more local or external information sources. Questions can be objective or subjective in nature. Results for objective questions can often be obtained by structured queries to one or more local or network information sources. Even for objective questions, the system may need to apply probabilistic or fuzzy set analysis to deal with cases of conflicting information or incomplete information. Information to answer subjective questions is generally obtained by one or more ad-hoc queries to local or network data sources, followed by probabilistic or fuzzy set evaluation of the one results to determine a best answer.

Once the domain agent **156** has formulated the one or more queries, they may be sent to local and/or network information sources. The queries may be performed in an asynchronous manner to account for the fact that sources respond at different speeds or may fail to respond at all. Duplicate queries can be sent to different information sources to ensure that at least one source responds with a useful result in a timely manner. Further, if multiple results are received in a timely manner, they can be scored by the system to determine which data is most reliable or appropriate. Examples of data sources accommodated include, HTTP data sources, sources with meta-data in various formats including XML, measurement data from sensors using various formats, device **32** setting parameters, entertainment audio, video and game files including MP3, databases using query languages and structured responses such as SQL, and other data sources.

The local information sources can be stored in one or more system databases **102** or can be on any local data storage such as a set of CDs or DVDs in a player or other local data storage. In other cases, local information can be obtained from vehicle system settings or measurement devices, Network information sources can be connected to, the control and device interfaces **30**, the data interfaces **26**, the Internet **42** or other network and accessed through a series of plug-ins or adaptors, known as pluggable sources, in the network interface **116**. The pluggable sources are capable of executing the protocols and interpreting the data formats for the data sources of interest. The pluggable source provides information scrapping forms and procedures for each source to the domain agents **156**. If a new type of data source is to be used a new plug-in or adaptor can be added to the appropriate interface.

The domain agent **156** can evaluate the results of the one or more queries as they arrive. The domain agent may score the relevance of the results based on results already received, the context, the criteria, the history of the dialog, the user profile **110** and domain specific information using probabilistic or fuzzy scoring techniques. Part of the dialog history is maintained in a context stack. The weight of each context for the scoring may be based on the relevance of one context to another and the age of the contexts. Other scoring variables can be associated through the context stack. Contexts can also be exclusive, so that previous contexts have no weight in the scoring.

Based on the on-going scoring processes, the domain agent **156** may determine if a single best answer can be extracted. For most questions, the desired result may include a set of tokens that may be found to formulate an answer. Once a value has been found for each of these tokens, the results are ready for presentation to the user. For example, for a question on weather, the tokens can include the date, day of week, predicted high temperature, predicted low temperature, chance of precipitation, expected cloud cover, expected type of precipitation and other tokens. Results processed in this manner may include error messages. For subjective questions, this determination is made by determining a most likely answer or answers, extracted by matching of the results received. If no satisfactory answer can be inferred from the results of the query, the agent can do one of the following:

1. Ask the user for more information, typically through the speech interface, and based on the results obtained formulate new queries. This approach is applied when an irresolvable ambiguity arises in the formulation of a response.
2. Formulate new queries based on the results received from the first set of queries. This approach is typically applied in cases where the responses received do not include all the required information. Information sources to queries can be inferred from the results already obtained (i.e., links in an HTML document or measurements or settings from other devices **32**) or from other sources. Using this approach one or more sets of queries and responses can be chained without the need for action by the user.
3. Wait for additional queries to return results.

In any case, the domain agent **156** may continue to make queries and evaluate results until a satisfactory response is constructed. In doing so, the agent can start several overlapping query paths or threads of inquiry, typically mediated by the event manager **100**. This technique, combined with the use of asynchronous queries from multiple data sources provides the real-time response performance required for a natural interaction with the user.

The domain agent **156** may apply conditional scraping operations to each query response as it is received. The conditional scraping actions may depend on the context, the criteria, user profile **110**, and domain agent coding and data. For each token to be extracted a scraping criteria **152** can be created using the services of the system agent **150**. The scraping criteria may use format specific scraping methods including, tables, lists, text, and other methods. One or more scraping criteria can be applied to a page or results set. Once

additional results are received, the domain agent can create new scraping criteria to apply to results already acquired. The conditional scarping process removes extraneous information, such as graphics, which need not be further processed or stored, improving system performance.

Specific commands are generally directed to one of the domain agents **156**. The real-time selection of the correct agent allows the invention to dynamically switch contexts. Command oriented domain agents **156** evaluate the command and the state of vehicle systems, system capabilities, and measurements to determine if the command can be executed at all or if doing so will exceed operating or safety limits. If the command is ambiguous or cannot be executed for some other reason, the system may ask the user for more information or may suggest what the problem is and a likely approach to the solution. The domain agent may format the command for the specific device **32** and control and device interface **30**. This formatting may involve variable substitution, inference of missing values and other formatting. Variable substitution and inference depends on the command context, the user profile **110**, command history, state of vehicle systems and measured values, and other factors. A complex command can result in more atomic commands being sent to multiple devices, perhaps in a sequence. The sequence and nature of subsequent commands may depend on the previous commands, results of pervious commands, device settings and other measurements. As a command is executed, measurements are made and results collected to determine if the execution was correct and the desired state or states were reached.

Once the domain agent **156** has created a satisfactory response to a question, or to a command, the agent may format that response for presentation. Typically, the domain agent can format the response into the markup format used by the text to speech engine **124**. The domain agent may format the result presentation using available format templates and based on the context, the criteria, and the user profile **110**. The domain agent may perform variable substitutions and transformations to produce a response best understood and most natural to the user. The domain agent may vary the order of presentation of tokens and the exact terminology used to create a more natural response to the user. The domain agent may also select the presentation personality **108** to be used.

For both command and query responses, the domain agent **156** may select the presentation template, determine order of presentation for tokens and determine variable substitutions and transformations using probabilistic or fuzzy set decision methods. The template used to form the presentation can be from the domain agent itself or from the user profile **110**. The user profile can completely specify the presentation format or can be used to select and then modify an existing presentation format. Selection and formatting of presentation template can also depend on the presentation personality **108**. At the same time, the characteristics of the personality used for the response are dynamically determined using probabilities or fuzzy possibilities derived from the context, the criteria, the domain agent itself and the user profile **110**.

The domain agent **156** may apply a number of transformations to the tokens before presentation to the user. These variable substitutions and transformations may be derived from a number of sources including, domain information carried by the agent, the context, the token values, the criteria, the personality **108** to be used, and the user profile **110**. Examples of variable substitutions and transformations include: 1) substitution of words for numbers; 2) substitution of names for acronyms or symbols (i.e., trading symbols); 3) use of formatting information derived from the information sources (i.e., HTML tags); 4) nature of the response including, text, long text, list, table; 5) possible missing information or errors; 6) units for measurement (i.e., English or metric); and, 7) preferred terminology from the user profile or presentation personality **108**.

The invention may provide special purpose presentation capabilities for long text strings, tables, lists and other large results sets. Domain agents **156** may use special formatting templates for such results. The system agent **150** can provide special criteria handlers **152** for presentation and user commands for large results sets. The presentation templates used by the domain agents for large results sets typically include methods for summarizing the results and then allowing the user to query the result in more detail. For example, initially only short summaries, such as headlines or key numbers, are presented. The user can then query the results set further. The criteria handlers provide users with the capability to browse large results sets. Commands provided by the criteria handlers for large results sets include, stop, pause, skip, rewind, start, and forward.

Some information, in formats such as video, pictures and graphics, may be best presented in a displayed format. The domain agents **156** apply suitable presentation templates in these cases and present the information through the non-speech interface **114**. The system agent **150** provides special criteria handlers **152** for presentation and user commands for display presentation and control.

Although particular embodiments of the invention have been shown and described, it will be understood that it is not intended to limit the invention to the embodiments that are disclosed and it will be obvious to those skilled in the art that various changes and modifications may be made without departing from the spirit and scope of the invention. Thus, the invention is intended to cover alternatives, modifications, and equivalents, which may be included within the spirit and scope of the invention as defined by the claims.

What is claimed is:

1. A device for processing natural language inputs, comprising one or more processors configured to:

receive a multi-modal natural language input from a user, the multi-modal natural language input including a natural language utterance and a non-speech input;

generate a non-speech transcription from the non-speech input;

identify the user who provided the multi-modal natural language input;

generate a speech-based transcription based on a cognitive model associated with the user, wherein the cognitive model includes information on one or more prior interactions between the user and the device;

generate a merged transcription from the speech-based transcription and the non-speech transcription;

identify, from among a plurality of entries that are in a context stack and that are each indicative of context, an entry in the context stack that matches information in the merged transcription;

identify a domain agent associated with the entry in the context stack;

determine a request based on the merged transcription; and

communicate the request to the domain agent, wherein the domain agent is configured to generate a response to the user.

2. The device of claim **1**, wherein the response includes an aggregation of content gathered when the identified domain agent processes the request.

3. The device of claim **1**, wherein the multi-modal natural language input is a first multi-modal natural language input

and is received during a first session, the one or more processors further configured to receive a second multi-modal natural language input from another user during the first session.

4. The device of claim **1**, wherein the one or more processors are configured to support interactions with a plurality of users during an interleaved session.

5. The device of claim **1**, wherein the cognitive model is a first cognitive model, wherein the one or more processors are configured to generate the speech-based transcription based on a second cognitive model that includes information on one or more interactions between the device and a plurality of users of the device.

6. The device of claim **5**, wherein the one or more processors are configured to generate the speech-based transcription further based on an environmental model that has information indicative of an environment of the user.

7. The device of claim **6**, wherein the environmental model has information indicative of how noisy the environment of the user is.

8. The device of claim **1**, wherein the one or more processors are configured to receive one or more subsequent multi-modal inputs, the subsequent multi-modal inputs including at least one of a subsequent natural language utterance or a subsequent non-speech input.

9. The device of claim **1**, wherein the identified domain agent is configured to update the context stack in response to processing the request.

10. The device of claim **1**, wherein the one or more processors are configured to synchronize the context stack with a context stack of another device.

11. The device of claim **10**, wherein the one or more processors are configured to synchronize the cognitive model with a cognitive model of another device.

12. A method for processing natural language inputs, comprising:

receiving, by one or more processors, a multi-modal natural language input from a user, the multi-modal natural language input including a natural language utterance and a non-speech input;

generating, by the one or more processors, a non-speech transcription from the non-speech input;

identifying, by the one or more processors, the user who provided the multi-modal natural language input;

generating, by the one or more processors, a speech-based transcription based on a cognitive model associated with the user, wherein the cognitive model includes information on one or more prior interactions between the user and the device;

generating, by the one or more processors, a merged transcription from the speech-based transcription and the non-speech transcription;

identifying, by the one or more processors, an entry in a context stack, from among a plurality of entries that are in the context stack and that are each indicative of context, wherein the identified entry matches information in the merged transcription;

identifying, by the one or more processors, a domain agent associated with the entry in the context stack;

determining, by the one or more processors, a request based on the merged transcription; and

communicating, by the one or more processors, the request to the domain agent, wherein the domain agent is configured to generate a response to the user.

13. The method of claim **12**, wherein the cognitive model is a first cognitive model, and wherein the generating the speech-based transcription is based on a second cognitive model that includes information on one or more interactions between the device and a plurality of users of the device.

14. A device for processing natural language inputs, comprising one or more processors configured to:

receive a natural language utterance from a user;

identify the user who provided the natural language utterance;

generate a speech-based transcription based on a personal cognitive model associated with the user and a general cognitive model, wherein the personal cognitive model includes information on one or more prior interactions between the device and the user, and wherein the general cognitive model includes information on one or more prior interactions between the device and a plurality of users;

identify, from among a plurality of entries that are in a context stack and that are each indicative of context, an entry that matches information in the speech-based transcription;

identify a domain agent associated with the entry in the context stack;

determine a request based on the speech-based transcription; and

communicate the request to the domain agent, wherein the domain agent is configured to generate a response to the user.

15. The device of claim **14**, wherein the one or more processors are configured to generate the speech-based transcription further based on an environmental model, wherein the environmental model includes information indicative of how noisy the environment of the user is.

* * * * *