US011459863B2

(12) **United States Patent**
Robinson et al.

(10) **Patent No.: US 11,459,863 B2**
(45) **Date of Patent: Oct. 4, 2022**

(54) **ELECTRIC POWERED HYDRAULIC FRACTURING PUMP SYSTEM WITH SINGLE ELECTRIC POWERED MULTI-PLUNGER FRACTURING PUMP**

(71) Applicant: **U.S. Well Services, LLC**, Houston, TX (US)

(72) Inventors: **Lon Robinson**, Houston, TX (US); **Jared Oehring**, Houston, TX (US); **Brandon N. Hinderliter**, Houston, TX (US)

(73) Assignee: **U.S. Well Services, LLC**, Houston, TX (US)

(*) Notice: Subject to any disclaimer, the term of this patent is extended or adjusted under 35 U.S.C. 154(b) by 0 days.

(21) Appl. No.: **17/060,647**

(22) Filed: **Oct. 1, 2020**

(65) **Prior Publication Data**

US 2021/0102451 A1 Apr. 8, 2021

Related U.S. Application Data

(60) Provisional application No. 62/910,163, filed on Oct. 3, 2019.

(51) **Int. Cl.**
E21B 43/12 (2006.01)
E21B 43/17 (2006.01)
E21B 43/26 (2006.01)

(52) **U.S. Cl.**
CPC ***E21B 43/17*** (2013.01); ***E21B 43/127*** (2013.01)

(58) **Field of Classification Search**
CPC E21B 43/127; E21B 43/17; E21B 43/26; E21B 43/2607
See application file for complete search history.

(56) **References Cited**

U.S. PATENT DOCUMENTS

1,541,601 A 6/1925 Tribe
1,743,771 A 1/1930 Hall
(Continued)

FOREIGN PATENT DOCUMENTS

CA 3067854 A1 1/2019
CN 104117308 A 10/2014
(Continued)

OTHER PUBLICATIONS

Morris et al., U.S. Appl. No. 62/526,869; Hydration-Blender Transport and Electric Power Distribution for Fracturing Operation; filed Jun. 28, 2018; USPTO; see entire document.
(Continued)

Primary Examiner — Matthew R Buck
(74) *Attorney, Agent, or Firm* — Hogan Lovells US LLP

(57) **ABSTRACT**

A hydraulic fracturing system includes a support structure having a first area at a first height and a second area at a second height, the first and second areas adjacent one another. The system also includes an electric powered, multi-plunger pump with an odd number of plungers, arranged in the first area, the electric powered pump coupled to a well, via outlet piping, and powered by at least one electric motor, also arranged in the first area. The system further includes a variable frequency drive (VFD), arranged in the second area, connected to the at least one electric motor, the VFD configured to control at least a speed of the at least one electric motor. The system also includes a transformer, arranged in the second area, the transformer positioned within an enclosure with the VFD, the transformer distributing power to the electric pump.

20 Claims, 5 Drawing Sheets

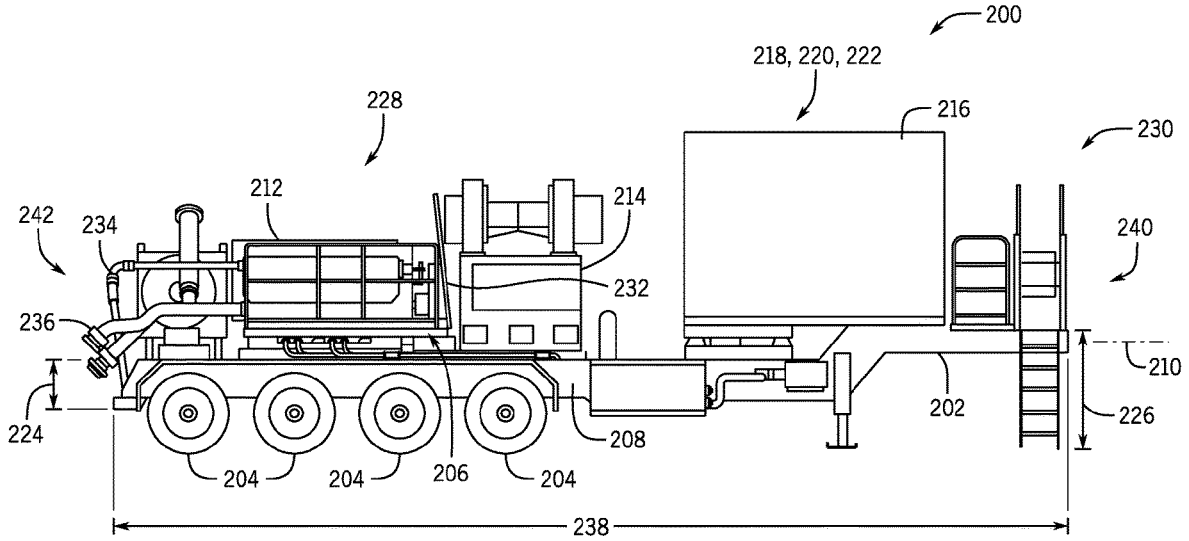

(56) **References Cited**

U.S. PATENT DOCUMENTS

1,967,466	A	7/1934	Damsel
2,244,106	A	6/1941	Granberg
2,976,025	A	3/1961	Pro
3,347,570	A	10/1967	Roessler
3,878,884	A	4/1975	Raleigh
3,967,841	A	7/1976	Kendrick
4,411,313	A	10/1983	Johnson et al.
4,442,665	A	4/1984	Fick
4,538,916	A	9/1985	Zimmerman
4,601,629	A	7/1986	Zimmerman
4,768,884	A	9/1988	Elkin
4,783,038	A	11/1988	Gilbert
5,114,239	A	5/1992	Allen
5,293,947	A	3/1994	Stratton
5,334,899	A	8/1994	Skybyk
5,439,066	A	8/1995	Gipson
5,486,047	A	1/1996	Zimmerman
5,517,822	A	5/1996	Haws et al.
5,549,285	A	8/1996	Collins
5,606,853	A	3/1997	Birch
5,791,636	A	8/1998	Loziuk
5,798,596	A	8/1998	Lordo
5,813,455	A	9/1998	Pratt et al.
5,894,888	A	4/1999	Wiemers
5,950,726	A	9/1999	Roberts
6,035,265	A	3/2000	Dister et al.
6,097,310	A	8/2000	Harrell et al.
6,116,040	A	9/2000	Stark
6,121,705	A	9/2000	Hoong
6,273,193	B1	8/2001	Hermann et al.
6,315,523	B1	11/2001	Mills
6,406,011	B1	6/2002	Kosar
6,442,942	B1	9/2002	Kopko
6,510,695	B1	1/2003	Fisher
6,585,455	B1	7/2003	Petersen et al.
6,626,646	B2	9/2003	Rajewski
6,765,304	B2	7/2004	Baten et al.
6,788,022	B2	9/2004	Sopko
6,837,910	B1	1/2005	Yoshikawa
6,985,750	B1	1/2006	Vicknair et al.
7,170,262	B2	1/2007	Pettigrew
7,279,655	B2	10/2007	Blutke
7,309,835	B2	12/2007	Morrison
7,341,287	B2	3/2008	Gibb
7,494,263	B2	2/2009	Dykstra
7,717,193	B2	5/2010	Egilsson
7,770,396	B2	8/2010	Roby
7,795,830	B2	9/2010	Johnson
7,807,048	B2	10/2010	Collette
7,845,413	B2	12/2010	Shampine
7,900,893	B2	3/2011	Teurlay
7,940,039	B2	5/2011	de Buda
8,146,665	B2	4/2012	Neal
8,221,513	B2	7/2012	Ariyapadi
8,272,439	B2	9/2012	Strickland
RE44,444	E	8/2013	Dole
8,506,267	B2	8/2013	Gambier et al.
8,556,302	B2	10/2013	Dole
8,616,274	B2	12/2013	Belcher
8,763,387	B2	7/2014	Schmidt
8,789,601	B2	7/2014	Broussard
8,795,525	B2	8/2014	McGinnis et al.
8,905,056	B2	12/2014	Kendrick
8,997,904	B2	4/2015	Cryer
9,051,923	B2	6/2015	Kuo
9,062,545	B2	6/2015	Roberts et al.
9,140,105	B2	9/2015	Pattillo
9,353,593	B1	5/2016	Lu et al.
9,410,410	B2	8/2016	Broussard
9,450,385	B2	9/2016	Kristensen
9,482,086	B2	11/2016	Richardson et al.
9,506,333	B2	11/2016	Castillo et al.
9,534,473	B2	1/2017	Morris
9,706,185	B2	7/2017	Ellis
9,739,546	B2	8/2017	Bertilsson et al.
9,745,840	B2	8/2017	Oehring
9,790,858	B2	10/2017	Kanebako
9,840,901	B2	12/2017	Oehring
9,893,500	B2	2/2018	Oehring
9,903,190	B2	2/2018	Conrad
9,945,365	B2 *	4/2018	Hernandez F04B 17/03
9,970,278	B2	5/2018	Broussard
10,020,711	B2	7/2018	Oehring
10,119,381	B2	11/2018	Oehring
10,184,465	B2	1/2019	Enis et al.
10,221,639	B2	3/2019	Romer et al.
10,254,732	B2	4/2019	Oehring
10,280,724	B2	5/2019	Hinderliter
10,302,079	B2	5/2019	Kendrick
10,337,308	B2	7/2019	Broussard
10,408,030	B2	9/2019	Oehring
10,408,031	B2	9/2019	Oehring
10,415,332	B2	9/2019	Morris et al.
10,526,882	B2	1/2020	Oehring
10,627,003	B2	4/2020	Dale et al.
10,648,270	B2	5/2020	Brunty et al.
10,648,311	B2	5/2020	Oehring et al.
10,669,471	B2	6/2020	Schmidt et al.
10,686,301	B2	6/2020	Oehring et al.
10,690,131	B2	6/2020	Rashid
10,695,950	B2	6/2020	Igo et al.
10,711,576	B2	7/2020	Bishop
10,731,561	B2	8/2020	Oehring et al.
10,740,730	B2	8/2020	Altamirano et al.
10,767,561	B2	9/2020	Brady
10,781,752	B2	9/2020	Kikkawa et al.
10,794,165	B2	10/2020	Fischer et al.
10,934,824	B2	3/2021	Oehring
10,988,998	B2 *	4/2021	Fischer E21B 7/022
11,091,992	B2	8/2021	Broussard
2001/0000996	A1	5/2001	Grimland et al.
2003/0057704	A1	3/2003	Baten
2004/0045703	A1	3/2004	Hooper et al.
2005/0116541	A1	6/2005	Seiver
2005/0201197	A1	9/2005	Duell et al.
2006/0109141	A1	5/2006	Huang
2007/0125544	A1	6/2007	Robinson
2007/0201305	A1	8/2007	Heilman
2008/0095644	A1	4/2008	Mantei et al.
2008/0164023	A1	7/2008	Dykstra et al.
2008/0217024	A1	9/2008	Moore
2008/0236818	A1	10/2008	Dykstra
2008/0257449	A1	10/2008	Weinstein et al.
2008/0277120	A1	11/2008	Hickie
2008/0288115	A1	11/2008	Rusnak
2009/0068031	A1	3/2009	Gambier
2009/0068301	A1	3/2009	Gambier
2009/0072645	A1	3/2009	Quere
2009/0078410	A1	3/2009	Krenek
2009/0114392	A1	5/2009	Tolman
2009/0153354	A1	6/2009	Daussin
2009/0308602	A1	12/2009	Bruins
2009/0315297	A1	12/2009	Nadeau
2010/0038907	A1	2/2010	Hunt
2010/0193057	A1	8/2010	Garner
2010/0250139	A1	9/2010	Hobbs
2010/0281876	A1	11/2010	Khan
2011/0061855	A1	3/2011	Case
2011/0081268	A1	4/2011	Ochoa et al.
2011/0110793	A1	5/2011	Leugemors et al.
2011/0175397	A1	7/2011	Amrine
2011/0197988	A1	8/2011	Van Vliet
2011/0241590	A1	10/2011	Horikoshi
2012/0063936	A1	3/2012	Baxter et al.
2012/0112757	A1	5/2012	Vrankovic
2012/0150455	A1	6/2012	Franklin et al.
2012/0152716	A1	6/2012	Kikukawa et al.
2012/0255734	A1	10/2012	Coli
2013/0051971	A1	2/2013	Wyse et al.
2013/0078114	A1	3/2013	Van Rijswick
2013/0138254	A1	5/2013	Seals
2013/0189629	A1	7/2013	Chandler
2013/0255271	A1	10/2013	Yu et al.
2013/0284455	A1	10/2013	Kajaria et al.

(56) **References Cited**

U.S. PATENT DOCUMENTS

2013/0306322	A1	11/2013	Sanborn	
2014/0077607	A1	3/2014	Clarke	
2014/0138079	A1	5/2014	Broussard	
2014/0174717	A1*	6/2014	Broussard	E21B 43/26 166/66.4
2014/0294603	A1	10/2014	Best	
2015/0027712	A1*	1/2015	Vicknair	F17D 1/08 166/305.1
2015/0114652	A1	4/2015	Lestz	
2015/0144336	A1	5/2015	Hardin	
2015/0147194	A1	5/2015	Foote	
2015/0233530	A1	8/2015	Sandidge	
2015/0252661	A1	9/2015	Glass	
2016/0006311	A1	1/2016	Li	
2016/0230660	A1	8/2016	Zeitoun et al.	
2016/0258267	A1	9/2016	Payne	
2016/0273456	A1	9/2016	Zhang et al.	
2016/0290114	A1	10/2016	Gehring	
2016/0326853	A1	11/2016	Fred et al.	
2016/0326854	A1	11/2016	Broussard	
2016/0348479	A1	12/2016	Oehring	
2017/0016433	A1	1/2017	Chong	
2017/0030177	A1*	2/2017	Oehring	E21B 7/026
2017/0043280	A1	2/2017	Vankouwenberg	
2017/0074076	A1	3/2017	Joseph et al.	
2017/0082033	A1	3/2017	Wu et al.	
2017/0096889	A1	4/2017	Blanckaert et al.	
2017/0138171	A1	5/2017	Richards et al.	
2017/0204852	A1	7/2017	Barnett	
2017/0212535	A1	7/2017	Shelman et al.	
2017/0226842	A1	8/2017	Omont	
2017/0370639	A1	12/2017	Barden et al.	
2018/0090914	A1	3/2018	Johnson et al.	
2018/0181830	A1	6/2018	Laharuka et al.	
2018/0259080	A1	9/2018	Dale et al.	
2018/0266217	A1	9/2018	Funkhauser et al.	
2018/0284817	A1	10/2018	Cook et al.	
2018/0298731	A1	10/2018	Bishop	
2018/0312738	A1	11/2018	Rutsch et al.	
2018/0313677	A1	11/2018	Warren et al.	
2018/0363640	A1	12/2018	Kajita et al.	
2018/0366950	A1	12/2018	Pedersen et al.	
2019/0040727	A1	2/2019	Oehring et al.	
2019/0128104	A1	5/2019	Graham et al.	
2019/0145251	A1	5/2019	Johnson	
2019/0154020	A1	5/2019	Glass	
2019/0249527	A1	8/2019	Kraynek	
2019/0257462	A1	8/2019	Rogers	
2019/0338762	A1*	11/2019	Curry	E21B 33/13
2020/0040878	A1*	2/2020	Morris	F04B 17/05
2020/0047141	A1	2/2020	Oehring et al.	
2020/0088152	A1	3/2020	Allion et al.	
2020/0325760	A1*	10/2020	Markham	E21B 43/26
2020/0350790	A1	11/2020	Luft et al.	

FOREIGN PATENT DOCUMENTS

CN	104196613	A	12/2014
CN	205986303	U	2/2017
CN	108049999	A	5/2018
CN	112196508	A	1/2021
WO	00/47893		8/2000
WO	2009046280		4/2009
WO	2012/051705		4/2012
WO	2014/116761		7/2014
WO	2014/177346		11/2014
WO	2014177346		11/2014
WO	2018044307	A1	3/2018
WO	2018213925	A1	11/2018
WO	2019210417		11/2019

OTHER PUBLICATIONS

Final Office Action dated Feb. 4, 2021 in U.S. Appl. No. 16/597,014.
International Search Report and Written Opinion dated Feb. 4, 2021 in PCT/US20/59834.
International Search Report and Written Opinion dated Feb. 2, 2021 in PCT/US20/58906.
International Search Report and Written Opinion dated Feb. 3, 2021 in PCT/US20/58899.
Non-Final Office Action dated Jan. 29, 2021 in U.S. Appl. No. 16/564,185.
Final Office Action dated Jan. 21, 2021 in U.S. Appl. No. 16/458,696.
Final Office Action dated Jan. 11, 2021 in U.S. Appl. No. 16/404,283.
Non-Final Office Action dated Jan. 4, 2021 in U.S. Appl. No. 16/522,043.
International Search Report and Written Opinion dated Dec. 14, 2020 in PCT/US2020/53980.
International Search Report and Written Opinion mailed in PCT/US20/67526 dated May 6, 2021.
International Search Report and Written Opinion mailed in PCT/US20/67608 dated Mar. 30, 2021.
International Search Report and Written Opinion mailed in PCT/US20/67528 dated Mar. 19, 2021.
International Search Report and Written Opinion mailed in PCT/US20/67146 dated Mar. 29, 2021.
International Search Report and Written Opinion mailed in PCT/US20/67523 dated Mar. 22, 2021.
International Search Report and Written Opinion mailed in PCT/US2020/066543 dated May 11, 2021.
Non-Final Office dated Oct. 26, 2020 in U.S. Appl. No. 15/356,436.
Non-Final Office dated Oct. 5, 2020 in U.S. Appl. No. 16/443,273.
Non-Final Office Action dated Sep. 29, 2020 in U.S. Appl. No. 16/943,727.
Non-Final Office Action dated Sep. 2, 2020 in U.S. Appl. No. 16/356,263.
Non-Final Office Action dated Aug. 31, 2020 in U.S. Appl. No. 16/167,083.
Albone, "Mobile Compressor Stations for Natural Gas Transmission Service," ASME 67-GT-33, Turbo Expo, Power tor Land, Sea and Air, vol. 79887, p. 1-10, 1967.
Canadian Office Action dated Sep. 22, 2020 in Canadian Application No. 2,982,974.
International Search Report and Written Opinion dated Sep. 3, 2020 in PCT/US2020/36932.
"Process Burner" (https://www.cebasrt.com/productsloii-gaslprocess-bumer) Sep. 6, 2018, (Sep. 6, 2018), entire document, especially para (Burners for refinery Heaters].
Water and Glycol Heating Systems• (https://www.heat-inc.com/wg-series-water-glycol-systems/) Jun. 18, 2018 (Jun. 18, 2018), entire document, especially WG Series Water Glycol Systems.
"Heat Exchanger" (https://en.wiklpedia.org/w/index.php?title=Heat_exchanger&oldid=89300146) Dec. 18, 2019 Apr. 2019 (Apr. 18, 2019), entire document, especially para (0001].
Canadian Office Action dated Sep. 8, 2020 in Canadian Patent Application No. 2,928,707.
Canadian Office Action dated Aug. 31, 2020 in Canadian Patent Application No. 2,944,980.
International Search Report and Written Opinion dated Aug. 28, 2020 in PCT/US20/23821.
U.S. Well Services, LLC v *Tops Well Services, LLC and Honghua America, LLC*, Case No. 3:19-cv-00237, Document 72-9, Declaration of Dr. Robert Schaaf, Apr. 24, 2020, 52 pages.
U.S. Well Services, LLC v *Tops Well Services, LLC and Honghua America, LLC*, Case No. 3:19-cv-00237 Document 72-9, Declaration of Dr. Robert Schaaf—part 2, Apr. 24, 2020, 128 pages.
U.S. Well Services, LLC v *Tops Well Services, LLC and Honghua America, LLC*, Case No. 3:19-cv-00237, Document 72-9, Declaration of Dr. Robert Schaaf—part 3, Apr. 24, 2020, 47 pages.
U.S. Well Services, LLC v *Tops Well Services, LLC and Honghua America, LLC*, Case No. 3:19-cv-00237, Document 72, Plaintiffs Opening Claim Construction Brief, Apr. 24, 2020, 37 pages.
U.S. Well Services, LLC v *Tops Well Services, LLC and Honghua America, LLC*, Case No. 3:19-cv-00237, Document 1, Plaintiffs Original Complaint, 63 pages.
U.S. Well Services, LLC v *Tops Well Services, LLC and Honghua America, LLC*, Case No. 3:19-cv-00237, Document 90, Plaintiffs Opposition to Defendants' Motion for Summary Judgment of Invalidity under 35 USC 112, 30 pages.

(56) **References Cited**

OTHER PUBLICATIONS

U.S. Well Services, LLC v *Tops Well Services, LLC and Honghua America, LLC*, Case No. 3:19-cv-00237, Document 116, Hearing on Markman and Summary Judgment via Video Conference before the Honorable Andrew M. Edison Day 1 of 1 Day—Transcript, Jun. 15, 2020, 308 pages.
Kirsch Research and Development, LLC v *Tarco Specialty Products, Inc.*, Case No. 6:20-cv-00318-ADA, Document 62, Memorandum Opinion and Order Granting Defendant's Opposed Motion to Stay Pending Inter Partes Review of the '482 Patent [ECF No. 57], Oct. 4, 2021, 6 pages.
Ledcomm LLC v *Signfiy North America Corp., Signify Holding B.V., and Signify N.V.*, Case No. 6:20-cv-01056-ADA, Document 24, Scheduling Order, Aug. 13, 2021, 4 pages.
Transcend Shipping Systems, LLC and Hapag-Lloyd AG and Hapag-Lloyd (America) LLC, CMA CGM (America) LLC and CMA CGM S.A., Mediterranean Shipping Company S.A., Case Nos. 6:20-cv-1195-ADA, 6:21-cv-0018-ADA, and 6:21-cv-0040-ADA, Document 19, Proposed Amended Scheduling Order, Aug. 13, 2021, 6 pages.
U.S. Well Services, Inc. and U.S. Well Services, LLC v *Halliburton Company and Cimarex Energy Co.*, Case No. 6:21-cv-00367-ADA, Document 51, Agreed Scheduling Order, Sep. 16, 2021, 5 pages.
U.S. Well Services, Inc. and U.S. Well Services, LLC v *Halliburton Company and Cimarex Energy Co.*, Case No. 6:21-cv-00367-ADA, Plaintiffs Disclosure of Asserted Claims and Preliminary Infringement Contentions, Jul. 12, 2021, 9 pages.
U.S. Well Services, Inc. and U.S. Well Services, LLC v *Halliburton Company and Cimarex Energy Co.*, Case No. 6:21-cv-00367-ADA, Plaintiff U.S. Well Services, LLC's Disclosure of Extrinsic Evidence, Oct. 19, 2021, 10 pages.
U.S. Well Services, Inc. and U.S. Well Services, LLC v *Halliburton Company and Cimarex Energy Co.*, Case No. 6:21-cv-00367-ADA, Defendants' Preliminary Invalidity Contentions, Sep. 10, 2021, 193 pages.
U.S. Well Services, Inc. and U.S. Well Services, LLC v *Halliburton Company and Cimarex Energy Co.*, Case No. 6:21-cv-00367-ADA, Document 1-8, Exhibit H, Halliburton—All Electric Fracturing Reducing Emissions and Cost, Apr. 15, 2021, 6 pages.
Bill Lockley and Barry Wood, "What do the API Motor/Generator Features Cost and What Do They Buy You?" 2010 IEEE, Paper No. PCIC-2010-22, 10 pages.
American Petroleum Institute, "Form-wound Squirrel-Cage Induction Motors—500 Horsepower and Larger," Jun. 2004, Fourth Edition, ANSI/API Standard 541-2003, 88 pages.
Assignment record of U.S. Pat. No. 9,366,114, accessed Aug. 19, 2021, 2 pages.
ASTM International, "Standard Specification for Steel Bars, Carbon and Alloy, Hot-Wrought, General Requirements" Oct. 13, 2006, 16 pages.
"U.S. Well Services Issues $125.5 Million Convertible Senior Secured PIK Notes, Executes License Agreement with ProFrac Manufacturing, LLC and Finalizes Amendment to Senior Secured Term Loan," Jun. 28, 2021, https://finance.yahoo.com/news/u-well-services-issues-125-203000637.html?guccounter=1, 6 pages.
Declaration of Joel N. Broussard, Case Nos. IPR2021-01032 & IPR2021-01033, Oct. 13, 2021, 9 pages.
Declaration of Dr. Robert Durham, Case Nos. IPR2021-01033, IPR2021-01032 and IPR2021-01034, Jun. 18, 2021, 179 pages.
Declaration of Robert Schaaf, Case Nos. IPR2021-01032 and IPR2021-01033, Oct. 12, 2021, 45 pages.
Declaration of Sylvia D. Hall-Ellis, Ph D., Case Nos. IPR2021-01032, IPR2021-01033, and IPR2021-01034, Jun. 18, 2021, 173 pages.
Stephen Cary et al., "Electric Rotating Machine Standards Part II: Magnetic Wedge Design & Monitoring Methods," 2011 IEEE, Paper No. PCIC-2011-41, 8 pages.
Janice Hoppe-Spiers, "Deploying Change," Energy & Mining International, Spring 2017, http://www.emi-magazine.com, 5 pages.
Jim Harris, "U.S. Well Services LLC—Energy and Mining Magazine," Energy & Mining International, Oct. 12, 2021, https://www.emi-magazine.com/sections/profiles/1221-US-well-services-llc, 3 pages.
U.S. Pat. No. 8,789,601, 159 pages.
U.S. Pat. No. 9,410,410, 263 pages.
U.S. Pat. No. 10,337,308, 861 pages.
"Clean Fleet Reduces Emissions by 99% at Hydraulic Fracturing Sites," Fluid Power Journal, https://fluidpowerjournal.com/clean-fleet-reduces-emissions/, accessed Sep. 22, 2021, 5 pages.
Gardner Denver, Well Servicing Pump Model GD-2500Q Quintuplex—Operating and Service Manual, Aug. 2005, 46 pages.
"Halliburton Delivers Successful Grid-Powered Frac Operation," https://www.halliburton.com/en/about-us/press-release/halliburton-delivers-first-successful-grid-powered-fracturing-operation, accessed Sep. 27, 2021, 4 pages.
Hart Energy, Hydraulic Fracturing Techbook, 2015, 99 pages.
R. Mistry et al., "Induction Motor Vibrations in view of the API 541—4th Edition," IEEE, accessed Jun. 10, 2021, 10 pages.
"Game-changing hydraulic fracturing technology, reduces emissions by 99%," Intrado Globe News Wire, Oct. 1, 2014, https://www.globenewswire.com/fr/news-release-2014/10/01/670029/10100696/en/Game-changing-hydraulic-fracturing-technology-reduces-emissions-by-99.html, 4 pages.
M. Hodowanec et al., "Introduction to API Standard 541, 4th Edition—Form-Wound Squirrel Cage Induction Motors—Larger than 500 Horsepower," 2003, IEEE, Paper No. PCIC-2003-33, 9 pages.
D. Bogh et al., "A User's Guide to Factory Testing of Large Motors: What Should Your Witness Expect," IEEE, accessed Jun. 10, 2021, 8 pages.
Ryan Davis, "Albright Says He'll Very Rarely Put Cases On Hold For PTAB," Law 360, https://www.law360.com/articles/1381597/print?section=ip, 2 pages.
Dani Kass, "Fintiv Fails: PTAB Uses 'Remarkably Inaccurate' Trial Dates," Nov. 2, 2021, Law 360, 1 page.
Eugene A. Avallone et al., "Marks' Standard Handbook for Mechanical Engineers, 11th Edition," 2007, pp. 3-65, 14-2, 14-3, 14-13, 14-14, 20-91, 22-12, 22-13, 22-14, 22-15, 22-16, 10-3, 20-21, 20-22, 20-85, 20-86, 20-89, and 20-90.
T. W. Pascall et al., "Navigating the Test Requirements of API 541 4th Edition," 2007, IEEE, Paper No. PCIC-2007-11, 12 pages.
"Kerr Pumps & FlowVale Awards for Excellence in Well Completion, Northeast 2017—Awarded to: U.S. Well Services," https://www.oilandgasawards.com/winner/northeast-2017-kerr-pumps-flowvale-awards.., accessed Oct. 5, 2021, 4 pages.
"New Technology Development Award—General/Products, Northeast 2015—Awarded to: U.S. Well Services, LLC," https://www.oilandgasawards.com/winner/northeast-2015-new-technology-development-award-generalproducts/#, accessed Aug. 23, 2021, 4 pages.
U.S. Well Services, Inc. v. *Halliburton Company*, Civil Docket for Case # 6:21-cv-00367-ADA, https://ecf.txwd.uscourts.gov/cgi-bin/DktRpt.pl?190912742001885-L_1_0-1, Accessed Nov. 29, 2021, 13 pages.
A. T. Dufresne, "How reliable are trial dates relied on by the PTAB in the Fintiv analysis?" Perkins Coie, 2021, 3 pages.
J. Malinowski et al., "Petrochemical Standards A Comparison Between IEEE 841-2001, API 541, and API 547," 2004, IEEE, Paper No. PCIC-2004-22, 8 pages.
"Petroleum Alumnus and Team Develop Mobile Fracturing Unit that Alleviates Environmental Impact," 2015, LSU, https://www.lsu.edu/eng/news/2015/07/20150713-mobile-fracturing-unit.php, accessed Sep. 22, 2021, 2 pages.
Liz Hampton, "Low-cost fracking offers boon to oil producers, headaches for suppliers," Reuters, Sep. 12, 2019, https://www.reuters.com/article/us-usa-oil-electric-fracturing-focus/low-cost-fracking-offers-boon-to-oil-producers-headaches-for-supplies, 11 pages.
Liz Hampton, "U.S. Well Services files e-frac patent lawsuit against Halliburton, Cimarex Energy," Reuters, Apr. 15, 2021, https://www.reuters.com/business/energy/us-well-services-files-e-frac-patent-lawsuit-against-halliburton-cimarex-energy, 10 pages.
U.S. Well Services, Inc. files suit against Halliburton Company and Cimarex Energy Co. for patent infringement, Apr. 15, 2021, PR

(56) **References Cited**

OTHER PUBLICATIONS

Newswire, https://www.prnewswire.com/news-releases/us-well-services-inc-files-suit-against-halliburton-company-and-cimarex-energy-co-for-patent-infringement-301270118.html, 2 pages.
Services—U.S. Well Services, http://uswellservices.com/services/, accessed Nov. 13, 2021, 10 pages.
Publications, U.S. Department of Labor—Occupational Safety and Health Administration, https://web.archive.org/web/20150626140537/https://www.osha gov/pls/publications/publication.html, 47 pages.
OSHA Publications, U.S. Department of Labor—Occupational Safety and Health Administration, https://web.archive.org/web/20150406054914/https://www.osha.gov/pls/publications/publication.AthruZ?pType=Industry, Jun. 13, 2021, 3 pages.
U.S. Department of Labor—Occupational Safety and Health Administration, https://web.archive.org/web/20150406152927/https://www.osha.gov/, 4 pages.
Steven C. Carlson, Weaponizing IPRs, Landslide, Sep. 22, 2019, 10 pages.
Declaration of Dr. Mark Ehsani, IPR2021-01066, Jul. 2, 2021, 213 pages.
Declaration of Robert Schaaf, IPR2021-01066, Nov. 17, 2021, 43 pages.
U.S. Pat. No. 10,020,711, 250 pages.
U.S. Appl. No. 62/323,303, 62 pages.
Amazon.com purchase page for Electrical Engineering Reference Manual for the Electrical and Computer PE Exam, Sixth Edition, https://web.archive.org/web/20070103124447/https:/www.amazon.com/Electrical-Engineering-Reference-Manual-Computer/dp/1888577568/, accessed Jul. 23, 2021, 7 pages.
Public Catalog of the U.S. Copyright Office for search result: electrical engineering reference manual, https://cocatalog.ioc.gov/cgi-bin/Pwebrecon.cgi?v1=6&ti=1, 6&Search_Arg=electrical engineering reference manual&Search_Code=TALL&CNT=25&PI . . ., accessed Jul. 21, 2021, 2 pages.
Declaration of Robert Schaaf, IPR2021-01238, Nov. 17, 2021, 38 pages.
John A. Camera, PE, Electrical Engineering Reference Manual for the Electrical and Computer PE Exam, Sixth Edition, 2002, 102 pages.
U.S. Pat. No. 10,526,882, 845 pages.
U.S. Appl. No. 62/180,289, 32 pages.
IEEE 100 The Authoritative Dictionary of IEEE Standards Terms Seventh Edition, 2000, 7 pages.
National Electrical Manufacturers Association, NEMA ICS 61800-4 Adjustable Speed Electrical Power Drive Systems, Part 4: General Requirements—Rating Specifications for A.C. Power Drive Systems above 1000 V a.c. and Not Exceeding 35 kV, 2004 22 pages.
Professional Publications, Inc., FE Exam, PE Exam, ARE Exam, and NCIDQ Exam Review / Professional Engineering Licensing. About PPI, https://web.archive.org/web/20031219231426/http://ppi2pass.com:80/catalog/servlet/MyPpi_pg_aboutppi.html, accessed Jul. 22, 2021, 1 page.
Professional Publications, Inc., FE Exam, PE Exam, ARE Exam, and NCIDQ Exam Review / Professional Engineering Licensing, What PPI Customers Say, https://web.archive.org/web/20031226130924/http://ppi2pass.com:80/catalog/servlet/MyPpi_pg_comments-EEcomments.html, accessed Jul. 22, 2021, 2 pages.
Professional Publications, Inc., FE Exam, PE Exam, ARE Exam, and NCIDQ Exam Review / Professional Engineering Licensing, Homepage, https://web.archive.org/web/20040209054901/http://ppi2pass.com:80/catalog/servlet/MyPpi, accessed Jul. 19, 2021, 1 page.
Professional Publications, Inc., FE Exam, PE Exam, ARE Exam, and NCIDQ Exam Review / Professional Engineering Licensing, The PPI Online Catalog, https://web.archive.org/web/20040215142016/http://ppi2pass.com:80/catalog/servlet/MyPpi_ct_MAIN, accessed Jul. 19, 2021, 2 pages.
Professional Publications, Inc., FE Exam, PE Exam, ARE Exam, and NCIDQ Exam Review / Professional Engineering Licensing, Electrical PE Exam Review Products, https://web.archive.org/web/20040214233851/http://ppi2pass.com:80/catalog/servlet/MyPpi_ct_ELECTRICAL, accessed Jul. 19, 2021, 7 pages.
Professional Publications, Inc., FE Exam, PE Exam, ARE Exam, and NCIDQ Exam Review / Professional Engineering Licensing, Instructor's Corner, https://web.archive.org/web/20031219232547/http://ppi2pass.com:80/catalog/servlet/MyPpi_pg_corner-corner.html, accessed Jul. 19, 2021, 2 pages.
Professional Publications, Inc., FE Exam, PE Exam, ARE Exam, and NCIDQ Exam Review / Professional Engineering Licensing, Teaching an Electrical and Computer Engineering PE Exam Review Course, https://web.archive.org/web/20031223100101/http://ppi2pass.com:80/catalog/servlet/MyPpi_pg_corner-teachee.html, accessed Jul. 19, 2021, 2 pages.
Professional Publications, Inc., Electrical Engineering Reference Manual, 12 pages.
Professional Publications, Inc., Books for the FE, PE, FLS and PLS Exams, Spring 2004, http://www.ppi2pass.com/corner/catalog.pdf, 16 pages.
Lionel B. Roe, Practices and Procedures of Industrial Electrical Design, 1972, McGraw-Hill, Inc., Chapter 2: The Basic Electric System, 11 pages.
Declaration of Duncan Hall, Jul. 23, 2021, https://web.archive.org/web/20031219231426/http://ppi2pass.com:80/catalog/servlet/MyPpi_pg_aboutppi.html, 12 pages.
Declaration of Robert Durham, IPR2021-01315, Aug. 12, 2021, 209 pages.
Declaration of Robert Schaaf, IPR2021-01315, Nov. 19, 2021, 39 pages.
Excerpt of U.S. Pat. No. 9,893,500, 106 pages.
U.S. Pat. No. 9,893,500, 291 pages.
U.S. Appl. No. 62/323,168, 41 pages.
U.S. Well Services, Inc. and U.S. Well Services, LLC v *Halliburton Company and Cimarex Energy Co.*, Case No. 6:21-cv-00367-ADA, Document 63, Defendants' Claim Construction Brief in Reply to U.S. Well Services, LLC's Responsive Brief, Dec. 2, 2021, 30 pages.
U.S. Well Services, Inc. v *Halliburton Company*, Case No. 6:21-cv-00367-ADA, Civil Docket, accessed Dec. 17, 2021, 14 pages.
U.S. Well Services, Inc. v *Halliburton Company*, Case No. 6:21-cv-00367-ADA, Document 64, Order Resetting Markman Hearing, Dec. 8, 2021, 1 page.
Approved American National Standard, ANSI/NEMA MG Jan. 2011, American National Standard Motors and Generators, Dec. 9, 2021, 636 pages.
Comprehensive Power: Power it Up, Feb. 27, 2013, 28 pages.
Comprehensive Power: Power it Up, Brochure, 26 pages.
Declaration of Robert Schaaf, IPR2021-01316, Nov. 19, 2021, 33 pages.
Declaration of Robert Durham, IPR2021-01316, Aug. 13, 2021, 75 pages.
U.S. Pat. No. 10,280,724, 668 pages.
Declaration of Robert Schaaf, IPR2021-01538, Dec. 28, 2021, 40 pages.
Declaration of Dr. L. Brun Hilbert, Jr., P.E., IPR2021-01538, Sep. 22, 2021, 99 pages.
U.S. Pat. No. 10,408,031, 734 pages.
Maxwell James Clerk 1868, On Governors, Proc. R. Soc. Lond., pp. 16270-283.
Katsuhiko Ogata, Modern Control Engineering: Third Edition, 1997, 2 pages.
49 C.F.R. Part 393 (Oct. 1, 2006), 36 pages.
Non-Final Office Action issued in U.S. Appl. No. 16/871,928 dated Aug. 25, 2021.
Non-Final Office Action issued in U.S. Appl. No. 16/943,727 dated Aug. 3, 2021.
Non-Final Office Action issued in U.S. Appl. No. 14/881,525 dated Jul. 21, 2021.
Non-Final Office Action issued in U.S. Appl. No. 16/404,283 dated Jul. 21, 2021.
Notice of Allowance and Notice of Allowability issued in U.S. Appl. No. 15/829,419 dated Jul. 26, 2021.

(56) **References Cited**

OTHER PUBLICATIONS

Woodbury et al., "Electrical Design Considerations for Drilling Rigs," IEEE Transactions on Industry Applications, vol. 1A-12, No. 4, Jul./Aug. 1976, pp. 421-431.
Gardner Denver, 3" 1502 Male Hammer Union Discharge Flange, 2005, 13 pages.
Donald G. Fink, "Standard Handbook for Electrical Engineers—Thirteenth Edition," 1993, McGraw-Hill Inc., pp. 10-13, 20-21, 20-22, 20-85, 20-20, 20-89, 20-90, 20-91, 22-12, 22-13, 22-14, 22-15 and 22-16.
Email from Michael See on Jun. 10, 2021 regarding API-541 Fourth Edition: Public Availability, 2 pages.
Halliburton, Halliburtion All-Electric Fracturing Reducing Emissions and Cost Brochure, 2021, 6 pages.
IEEE Power Engineering Society, 112 IEEE Standard Test Procedure for Polyphase Induction Motors and Generators, 2004, 87 pages.
U.S. Well Services, LLC v *Tops Well Services, LLC*, Case No. 3:19-cv-237, Document 135, Order, Sep. 22, 2021, 2 pages.
U.S. Well Services, Inc. and U.S. Well Services, LLC v *Halliburton Company and Cimarex Energy Co.*, Case No. 6:21-cv-00367-ADA, Document 56, Defendants' Opening Claim Construction Brief, Oct. 27, 2021, 46 pages.
"Screenshot of USWS Clean Fleet System Video," 1 page.
John Daniel, "8.30 DEP Industry Observations: New Flac Fleet; New Fleet Designs Forthcoming," Daniel Energy Partners, Aug. 30, 2020, 13 pages.
Declaration of Joel N. Broussard, IPR2021-01034, IPR2021-01035, IPR2021-01036, and IPR2021-01037, Oct. 20, 2021, 11 pages.
Declaration of Robert Schaaf, IPR2021-01034, Oct. 20, 2021, 47 pages.
Declaration of Dr. Mark Ehsani, IPR2021-01035, Jun. 18, 2021, 188 pages.
U.S. Pat. No. 9,970,278, 310 pages.
Stan Gibilisco, The Illustrated Dictionary of Electronics: Audio/Video Consumer Electronics Wireless Technology—Eighth Edition, 2001, p. 667.
Declaration of Robert Schaaf, IPR2021-01035, Oct. 20, 2021, 51 pages.
Declaration of Dr. L. Brun Hilbert, P.E., IPR2021-01037 and IPR2021-01038, Jun. 21, 2021, 124 pages.
U.S. Pat. No. 9,745,840, 215 pages.
U.S. Pat. No. 10,408,030, 401 pages.
U.S. Appl. No. 62/242,173, 17 pages.
Declaration of Robert Schaaf, IPR2021-01037, Oct. 20, 2021, 52 pages.
Zeus Electric Pumping Unit, Halliburton, http://www.halliburton.com/en/products/zeus-electric-pumping-unit, 2021, 4 pages.
Declaration of Joel N. Broussard, IPR2021-01038, Oct. 20, 2021, 11 pages.
LedComm LLC v *Signify North America Corporation*, Case No. 6:20-cv-01056-ADA, Civil Docket, accessed Dec. 8, 2021, 11 pages.
U.S. Well Services, Inc. v *Halliburton Company*, Case No. 6:21-cv-00367-ADA, Civil Docket, accessed Dec. 13, 2021, 14 pages.
Declaration of Robert Schaaf, IPR2021-01038, Nov. 10, 2021, 40 pages.
Transcend Shipping Systems LLC v *Mediterranean Shipping Company S.A.*, Case No. 6:21-cv-00040, Document 27, Order of Dismissal with Prejudice, Dec. 7, 2021, 1 page.
Centers for Disease Control and Prevention, NIOSH Numbered Publications, https://web.archive.org/web/20120721180008/http://www.cdc.org/niosh/pubs/all_date_desc_nopubnumbers.html, 2012, 57 pages.
America Invents Act, H.R. Rep. No. 112-98, Jun. 1, 2011, 165 pages.
Declaration of Joel N. Broussard, IPR2021-01065, Oct. 20, 2021, 11 pages.
Declaration of Dr. Robert Durham, IPR2021-01065, Jun. 18, 2021, 138 pages.
Declaration of Robert Schaaf, IPR2021-01065, Nov. 10, 2021, 33 pages.
U.S. Pat. No. 9,410,410, Excerpt—Response to Non-Final Office Action dated Feb. 3, 2016, 57 pages.
U.S. Pat. No. 9,840,901, 216 pages.
U.S. Appl. No. 62/242,566, 34 pages.
Industrial Safety & Hygiene News, OSHA issues hazard alert for fracking and drilling, Jan. 6, 2015, 1 page.
Portfolio Media Inc., A Shift to Sand: Spotlight on Silica Use in Fracking, Law360, https://www.law360.com/articles/366057/print?section=energy, accessed Jun. 10, 2021, 5 pages.
Henry Chajet, "OSHA Issues Alert on Non-Silica Fracking Hazards," Jan. 30, 2015, National Law Review Newsroom, 2 pages.
U.S. Well Services, LLC, v *Voltagrid LLC, Nathan Ough, Certarus (USA) Ltd., and Jared Oehring*, Case No. 4:21-cv-3441-LHR, Document 13, Plaintiff U.S. Well Services, LLC's Motion for Preliminary Injunction and Request for Hearing, Nov. 4, 2021, 311 pages.
U.S. Department of Labor—Occupational Safety and Health Administration, Hydraulic Fracturing and Flowback Hazards Other than Respirable Silica, 27 pages.
U.S. Department of Labor—Occupational Safety and Health Administration, Hazard Alert—Worker Exposure to Silica Turing Hydraulic Fracturing, 2012, 7 pages.
U.S. Department of Labor—Occupational Safety and Health Administration, OSHA and NIOSH issued hazard alert on ensuring workers in hydraulic fracturing operations have appropriate protections from silica exposure, Jun. 21, 2012, 4 pages.
Occupational Safety and Health Administration—Home, United States Department of Labor, https://web.archive.org/web/20120722160756/http://www.osha.gov/, accessed Jun. 13, 2021, 2 pages.
Industry/Hazard Alerts, United States Department of Labor, https://web.archive.org/web/20120801064838/http://www.osha.gov:80/hazardindex.html, accessed Jun. 13, 2021, 1 page.
Hazard Alert—Worker Exposure to Silica during Hydraulic Fracturing, United States Department of Labor, https://web.archive.org/web/20120808200919/http://www.osha.gov/dts/hazardalerts/hydraulic_frac_hazard_alert.html, accessed Jun. 13, 2021, 5 pages.
A. Abbott, Crippling the Innovation Economy: Regulatory Overreach at the Patent Office, Regulatory Transparency Project, Aug. 14, 2017, 35 pages.
D. Heidel, Safety and Health Management Aspects for Handling Silica-based Products and Engineered Nanoparticles in Sequences of Shale Reservoir Stimulations Operations, Society of Petroleum Engineers, 2004, 4 pages.
Testimony of Judge Paul R. Michel (Ret.) United States Court of Appeals for the Federal Circuit Before the Subcommittee on Intellectual Property, U.S Senate Committee on the Judiciary, Jun. 4, 2019, 8 pages.
Bernard D. Goldstein, The Role of Toxicological Science in Meeting the Challenges and Opportunities of Hydraulic Fracturing, 2014, Toxicological Sciences, vol. 139, No. 2, pp. 271-283.
Mike Soraghan, OSHA issues hazard alert for fracking and drilling, E&E, Dec. 10, 2014, 1 page.
The American Heritage Dictionary of the English Language, Fifth Edition, Fiftieth Anniversary, p. 911.
Collins English Dictionary, Twelfth Edition, 2014, p. 1005.
Declaration of Robert Schaaf, IPR2021-01539, Jan. 25, 2022, 37 pages.
Department of Transportation, Federal Motor Carrier Safety Administration, 49 CFR Parts 390, 392 and 393—Parts and Accessories Necessary for Safe Operation; General Amendments; Final Rule, Federal Register, Aug. 15, 2005, vol. 70, No. 156, 49 pages.
U.S. Pat. No. 10,648,311, 1,804 pages.
D. Nedelcut et al., "On-line and Off-line Monitoring-Diagnosis System (MDS) for Power Transformers," IEEE, 2008 International Conference on Condition Monitoring and Diagnosis, Beijing, China, Apr. 21-24, 2008, 7 pages.
Random House Webster's Unabridged Dictionary, Second Edition, 2001, p. 990.

(56) **References Cited**

OTHER PUBLICATIONS

A. B. Lobo Ribeiro et al., "Multipoint Fiber-Optic Hot-Spot Sensing Network Integrated Into High Power Transformer for Continuous Monitoring," IEEE Sensors Journal, Jul. 2008, vol. 8, No. 7, pp. 1264-1267.
Society of Automotive Engineers, Sae J1292: Automobile, Truck, Truck-Tractor, Trailer, and Motor Coach Wiring, 49 CFR 393.28, Oct. 1981, 6 pages.
"StarTech NETRS2321E 1 Port RS-232/422/485 Serial over IP Ethernet Device Server," StarTech, http://www.amazon.com/StarTech-NETRS2321E-RS-232-Serial-Ethernet/dp/B000YN0N0S, May 31, 2014, 4 pages.
"StarTech.com 1 Port RS232 Serial to IP Ethernet Converter (NETRS2321P)," StarTech, http://www.amazon.com/StarTech-com-Serial-Ethernet-Converter-NETRS232IP/dp/B00FJEHNSO, Oct. 9, 2014, 4 pages.
"TCP/IP Ethernet to Serial RS232 RS485 RS422 Converter," Atc, http://www.amazon.com/Ethernet-Serial-RS232-RS485-Converter/dp/B00ATV2DX2, Feb. 1, 2014, 2 pages.
"SainSmart TCP/IP Ethernet to Serial RS232 RS485 Intelligent Communication Converter," SainSmart, http://www.amazon.com/SainSmart-Ethemet-Intelligent-Communication-Converter/dp/B008BGLUHW, Aug. 17, 2014, 4 pages.
"Global Cache iTach, IP to Serial with PoE (IP2SL-P)," Global Cache, https://www.amazon.com/Global-Cache-iTach-Serial-IP2SL-P/dp/B003BFVNS4/, Oct. 30, 2014, 3 pages.
Declaration of Robert Durham, IPR2022-00074, Nov. 8, 2021, 177 pages.
Declaration of Robert Schaaf, IPR2022-00074, Feb. 17, 2022, 36 pages.
U.S. Pat. No. 10,254,732, 552 pages.
U.S. Appl. No. 62/204,331, 22 pages.
Eugene A. Avallone, Marks' Standard Handbook for Mechanical Engineers: 11th Edition, 2007, p. 16-4 and 16-22.
Moxa 802.11 Ethernet to Serial, Moxastore, http://www.moxastore.com/Moxa_802_11_Wi_Fi_Ethernet_to_Serial_s/587.html, May 24, 2016, 1 page.
Project Registration, Moxastore, http://www.moxastore.com, Feb. 15, 2015, 2 pages.
About Us, Moxastore, http://www.moxastore.com/aboutus.asp, Mar. 8, 2015, 1 page.
NPORTIA5250, Moxastore, http://www.moxastore.com/NPORTIA5250_p/nportia5250.htm.
Declaration of Duncan Hall, Internet Archive, Oct. 26, 2021, https://web.archive.org/web/20140531134153/http://www.amazon.com/StarTech-NETRS2321E-RS-232-Serial-Ethernet/dp/B000YB0NOS, 43 pages.
Michael Quentin Morton, Unlocking the Earth: A Short History of Hydraulic Fracturing (2013), GeoExpro, vol. 10, No. 6, 5 pages.
Accommodating Seismic Movement, Victaulic Company, 2015, https://web.archive.org/web/20150412042941/http://www.victaulic.com:80/en/businesses-solutions/solutions/accommoda . . . , 2 pages.
Style W77 AGS Flexible Coupling, Victaulic Company 2015, https://web.archive.org/web/20150423052817/http://www.victaulic.com:80/en/products-services/products/style-w77-ags-f . . . , 1 page.
AGS Large Diameter Solutions, Victaulic Company, 2015, https://web.archive.org/web/20150419063052/http://www.victaulic.com:80/en/businesses-solutions/solutions/advanced-gr . . . , 2 pages.
Chiksan Original Swivel Joints, FMC, 1997, 16 pages.
CoorsTek Flowguard Products, 2012, 8 pages.
Declaration of Sylvia D. Hall-Ellis, IPR2022-00610, Feb. 28, 2022, 98 pages.
Excerpt of U.S. Pat. No. 10,119,381, 24 pages.
Excerpt of U.S. Pat. No. 10,934,824, 24 pages.
Flowline Products and Services, FMC Technologies, http://www.fmctechnologies.com, 80 pages.
Gardner Denver, Well Servicing Pump Model GD-2500Q, GD-2500Q-HD, Quintuplex Pumps, Sep. 2011, 45 pages.
Eugene A. Avallone, Marks' Standard Handbook for Mechanical Engineers: 11th Edition, 2007, Section 14, 18 pages.
Mohinder L. Nayyar, Piping Handbook Seventh Edition, McGraw-Hill Handbook, 2000, 77 pages.
Pulsation Dampers, Coorstek, 2014, https://web.archive.org/web/20140919005733/http://coorstek.com/markets/energy_equip . . . , 2 pages.
M. E. Rahman et al., "Wire rope isolators for vibration isolation of equipment and structures—A review," IOP Conference Series Materials Science and Engineering, Apr. 2015, 12 pages.
Victaulic Couplings Vibration Attenuation Characteristics, Victaulic, Publication 26.04, Oct. 2014, 5 pages.
Thorndike Saville, The Victaulic Pipe Joint, Journal of American Water Works Association, Nov. 1922, vol. 9, No. 6, pp. 921-927.
J. C. Wachel et al., "Analysis of Vibration and Failure Problems in Reciprocating Triplex Pumps for Oil Pipelines," The American Society of Mechanical Engineers, Presented at the Energy-Sources and Technology Conference and Exhibition, Dallas, Texas, Feb. 17-21, 1985, 8 pages.
Declaration of Nathaniel E. Frank-White, Internet Archive, Feb. 17, 2022, http://web.archive.org/web/20140329090440/http://www.enidline.com/pdffiles/WR_Catalog_2012.pdf, 82 pages.
Wire Rope Isolator Technologies, Enidine, Dec. 2011, 78 pages.
World's Best Swivel Joints, Flowvalve, 2013, https://web.archive.org/web/20150117041757/http://www.flowvalve.com:80/swivels, 10 pages.
"VZ Environmental Award of Excellence in Environmental Stewardship, Rocky Mountain 2016—Awarded to: U.S. Well Services, LLC," Oil & Gas Awards, 2016, https://www.oilandgasawards.com/winner/rocky-mountain-2016-vz-environmental-award-for-excellence-in-environmental-stewardship, accessed Aug. 23, 2021, 4 pages.
Austin H. Bonnett, "Root Cause Failure Analysis for AC Induction Motors in the Petroleum and Chemical Industry," 2010, IEEE, Paper No. PCIC-2010-43, 13 pages.
Carolyn Davis, "Natural Gas Finding Niche in E-Fracking, But Diesel Still Rules," Sep. 6, 2019, Natural Gas Intel, https://www.naturalgasintel.com/natural-gas-finding-niche-in-e-fracking-but-diesel-still-rules, 9 pages.
Tim Rahill and Michael C. Fousha, "Sorting Out the Overlap," Jan./Feb. 2009, IEEE Industry Applications Magazine, 12 pages.
Jodi Shafto, "Growth in electric-fracking fleets stunted by tight producer budgets," Aug. 6, 2019, S&P Global Market ntelligence, https://wwww.spglobal.com/marketintelligence/en/news-insights/latest-news-headlines/growth-in-electric-fracking-fleets-stunted-by-tight-producer-budgets, accessed Sep. 16, 2021, 4 pages.
A. H. Bonnett et al., "Squirrel Cage Rotor Options for A.C. Induction Motors," IEEE, accessed May 18, 2021, 4 pages.
U.S. Well Services Investor and Analyst Update: Second Quarter 2021 in Review, 2021, 7 pages.
Standing Order Governing Proceedings—Patent Cases, in the United States District Court for the Western District of Texas, Waco Division, filed Nov. 17, 2021, 11 pages.
U.S. Well Services—Services, http://uswellservices.com/services/, accessed Nov. 13, 2021, 10 pages.
Elsevier, "Variable Speed Pumping—A Guide to Successful Applications," 2019, 186 pages.
U.S. Well Services, Inc., and U.S. Well Services, LLC v *Halliburton Company, Cimarex Energy Co., Halliburton Energy Services, Inc., and Halliburton US Techologies, Inc.*, Case No. WA:21-CV-00367-ADA, Document 61, Order Setting Markman Hearing, Nov. 29, 2021, 1 page.
U.S. Well Services, Inc., and U.S. Well Services, LLC v *Halliburton Company, Cimarex Energy Co., Halliburton Energy Services, Inc., and Halliburton US Techologies, Inc.*, Case No. WA:21-CV-00367-ADA, Document 61, Order Resetting Markman Hearing, Dec. 8, 2021, 1 page.
Affidavit of Duncan Hall, Internet Archives on Jun. 7, 2021, https://web.archive.org/web/20120917102614/http:/www.quincieoilfield.com/pdf/3.0%20Gardner%20Denver/2500/GD2500Q%200p%20&%20Service%20Manual.pdf, 76 pages.
Kroposki et al., Making Microgrids Work, 6 IEEE Power and Energy Mag. 40, 41 (2008).
Dan T. Ton & Merrill A. Smith, The U.S. Department of Energy's Microgrid Initiative, 25 The Electricity J. 84 (2012), pp. 84-94.

(56) **References Cited**

OTHER PUBLICATIONS

Non-Final Office Action issued in U.S. Appl. No. 16/871,328 dated Dec. 9, 2021.
Non-Final Office Action issued in U.S. Appl. No. 16/943,935 dated Oct. 21, 2021.
Non-Final Office Action issued in U.S. Appl. No. 16/564,186, dated Oct. 15, 2021.
Final Office Action issued in U.S. Appl. No. 16/356,263 dated Oct. 7, 2021.
Non-Final Office Action issued in U.S. Appl. No. 17/060,647 dated Sep. 20, 2021.
Non-Final Office Action issued in U.S. Appl. No. 16/901,774 dated Sep. 14, 2021.
Canadian Office Action issued in Canadian Application No. 3,094,768 dated Oct. 28, 2021.

* cited by examiner

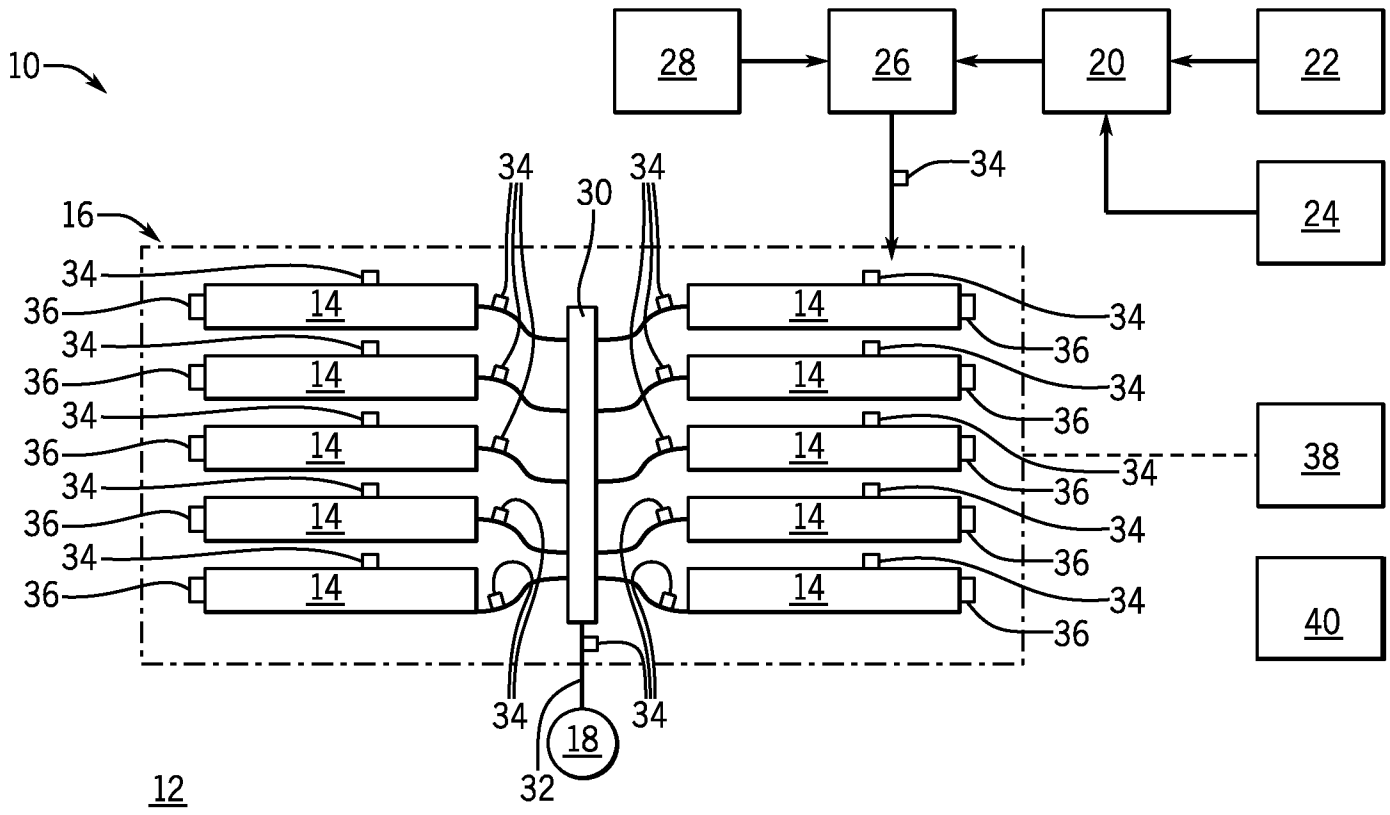

FIG. 1

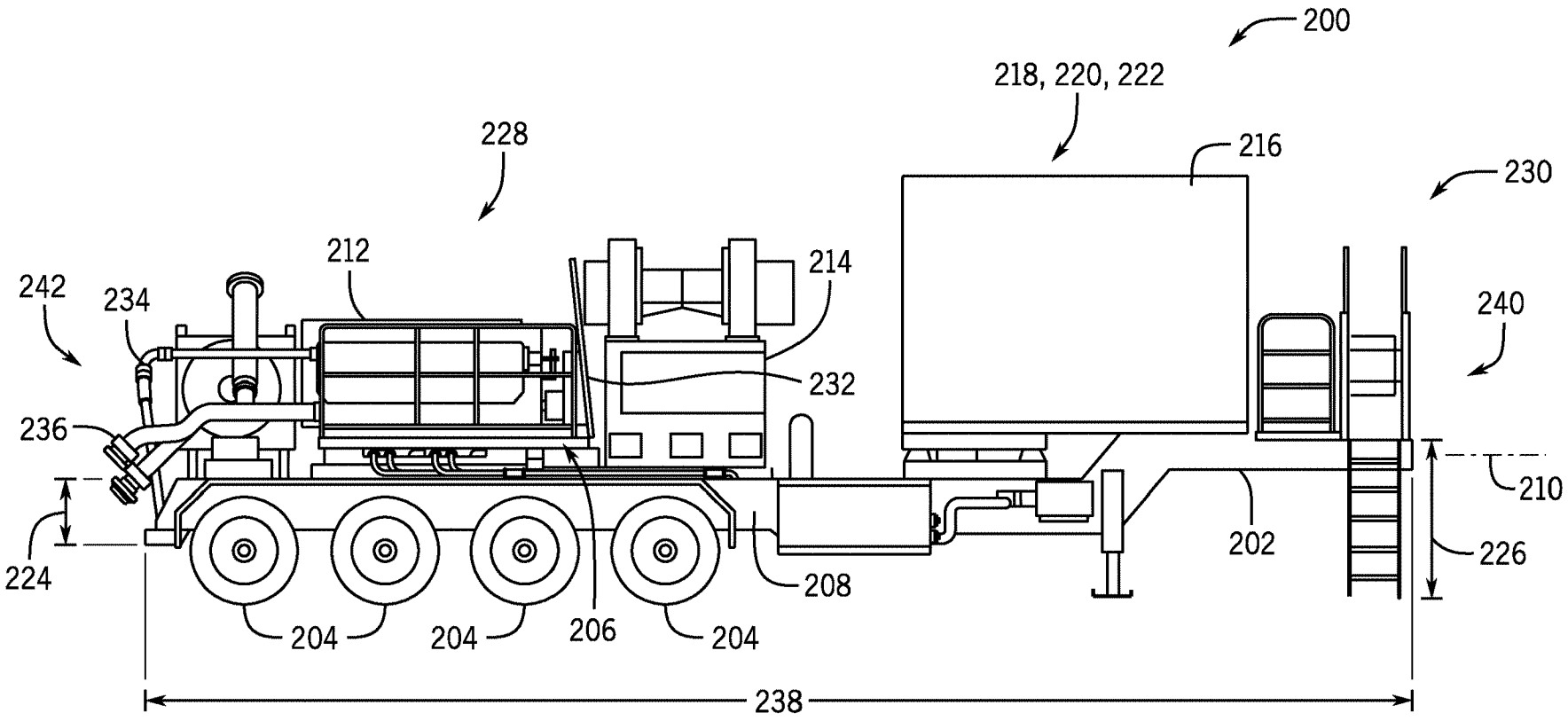
200
218, 220, 222
216
230
228
212
214
242
234
240
232
236
210
224
202
226
208
204
204
206
204
238

FIG. 2

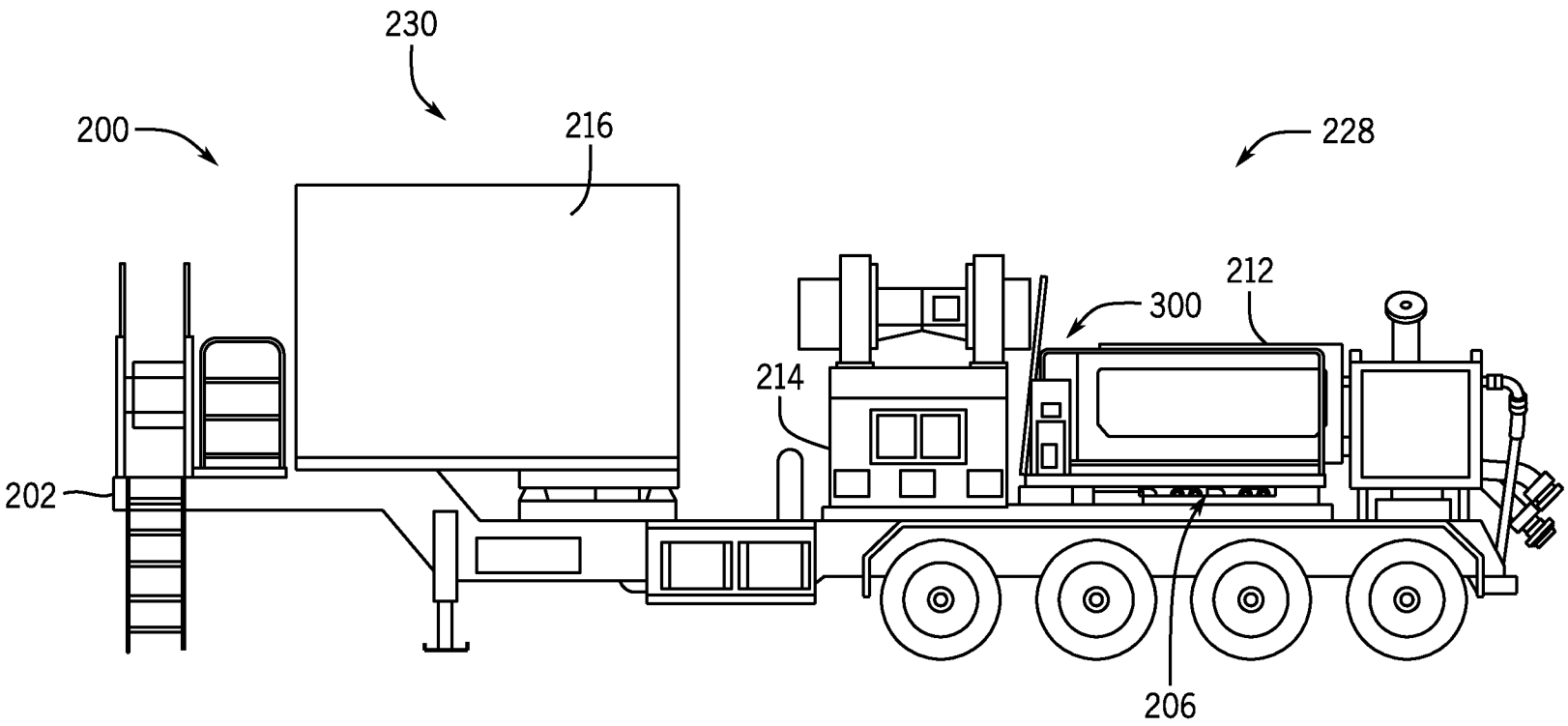

FIG. 3

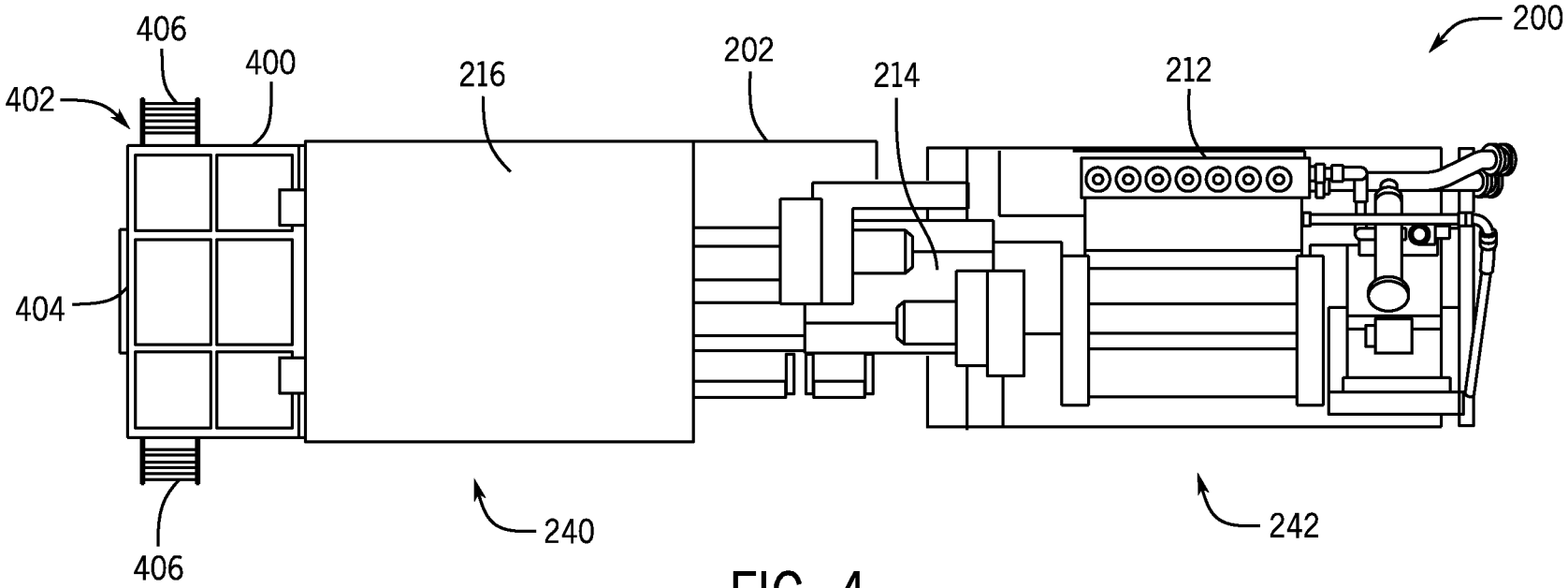

FIG. 4

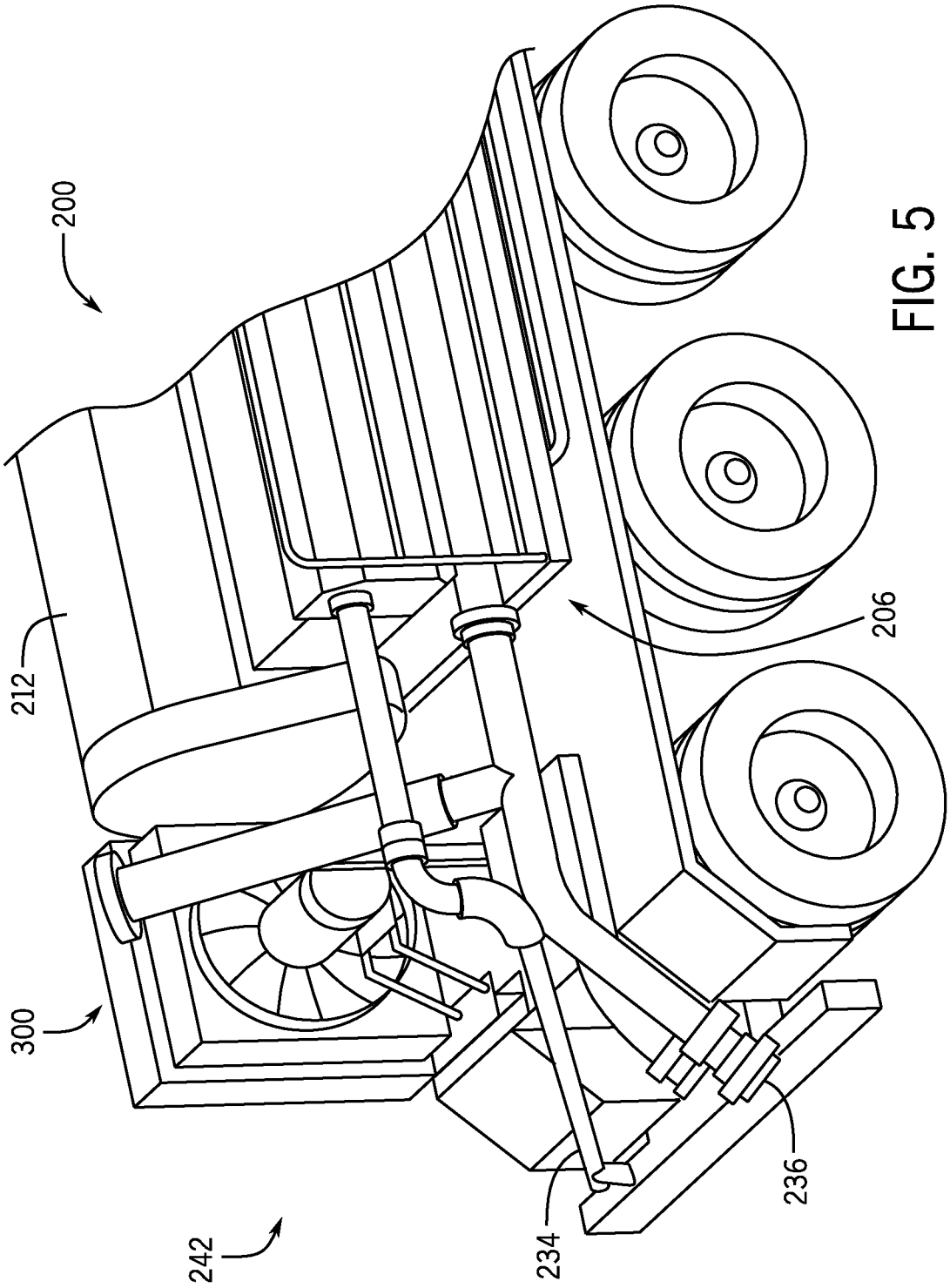

FIG. 5

LIBERTY EXHIBIT 1001, Page 13

ELECTRIC POWERED HYDRAULIC FRACTURING PUMP SYSTEM WITH SINGLE ELECTRIC POWERED MULTI-PLUNGER FRACTURING PUMP

CROSS REFERENCE TO RELATED APPLICATIONS

This application claims priority to and the benefit of U.S. Provisional Application Ser. No. 62/910,163 filed Oct. 3, 2019 titled "ELECTRIC POWERED HYDRAULIC FRACTURING PUMP SYSTEM WITH SINGLE ELECTRIC SEPTUPLEX FRACTURING PUMP," the full disclosure of which is hereby incorporated herein by reference in its entirety for all purposes.

BACKGROUND

1. Technical Field

This disclosure relates generally to hydraulic fracturing and more particularly to systems and methods for compact modular trailer arrangements for electric powered multi-plunger fracturing pump systems.

2. Background

With advancements in technology over the past few decades, the ability to reach unconventional sources of hydrocarbons has tremendously increased. Horizontal drilling and hydraulic fracturing are two such ways that new developments in technology have led to hydrocarbon production from previously unreachable shale formations. Hydraulic fracturing (fracturing) operations typically require powering numerous components in order to recover oil and gas resources from the ground. For example, hydraulic fracturing usually includes pumps that inject fracturing fluid down the wellbore, blenders that mix proppant into the fluid, cranes, wireline units, and many other components that all must perform different functions to carry out fracturing operations.

Usually in fracturing systems the fracturing equipment runs on diesel-generated mechanical power or by other internal combustion engines. Such engines may be very powerful, but have certain disadvantages. Diesel is more expensive, is less environmentally friendly, less safe, and heavier to transport than natural gas. For example, heavy diesel engines may require the use of a large amount of heavy equipment, including trailers and trucks, to transport the engines to and from a wellsite. In addition, such engines are not clean, generating large amounts of exhaust and pollutants that may cause environmental hazards, and are extremely loud, among other problems. Onsite refueling, especially during operations, presents increased risks of fuel leaks, fires, and other accidents. The large amounts of diesel fuel needed to power traditional fracturing operations requires constant transportation and delivery by diesel tankers onto the well site, resulting in significant carbon dioxide emissions.

Some systems have tried to eliminate partial reliance on diesel by creating bi-fuel systems. These systems blend natural gas and diesel, but have not been very successful. It is thus desirable that a natural gas powered fracturing system be used in order to improve safety, save costs, and provide benefits to the environment over diesel powered systems. Turbine use is well known as a power source, but is not typically employed for powering fracturing operations.

Though less expensive to operate, safer, and more environmentally friendly, turbine generators come with their own limitations and difficulties as well. As is well known, turbines generally operate more efficiently at higher loads. Many power plants or industrial plants steadily operate turbines at 98% to 99% of their maximum potential to achieve the greatest efficiency and maintain this level of use without significant difficulty. This is due in part to these plants having a steady power demand that either does not fluctuate (i.e., constant power demand), or having sufficient warning if a load will change (e.g., when shutting down or starting up a factory process).

Space is at a premium at a fracturing site, where different vendors are often working simultaneously to prepare for a fracturing operation. As a result, utilizing systems that have large footprints may be undesirable. However, pressure pumpers still need to be able to provide sufficient pumping capacity in order to complete fracturing jobs.

SUMMARY

The present disclosure is directed to a method and system for a modular switchgear system and power distribution for electric oilfield equipment.

In an embodiment, a hydraulic fracturing system includes a support structure having a first area at a first height and a second area at a second height, the first and second areas adjacent one another. The system also includes an electric powered, multi-plunger pump with an odd number of plungers, arranged in the first area, the electric powered pump coupled to a well, via outlet piping, and powered by at least one electric motor, also arranged in the first area. The system further includes a variable frequency drive (VFD), arranged in the second area, connected to the at least one electric motor, the VFD configured to control at least a speed of the at least one electric motor. The system also includes a transformer, arranged in the second area, the transformer positioned within an enclosure with the VFD, the transformer distributing power to the electric pump.

In an embodiment, a hydraulic fracturing system includes an electric powered, multi-plunger pump, arranged on a support structure, the electric powered multi-plunger pump powered by at least one electric motor. The system also includes a variable frequency drive (VFD), arranged on the support structure, connected to the at least one electric motor to control a speed of the at least one electric motor, the variable VFD positioned separate from the electric powered, multi-plunger pump and within an enclosure. The system further includes a transformer, arranged on the support structure, distributing power to the electric powered, multi-plunger pump, the power being received from the least one generator at a voltage higher than an operating voltage of the electric powered pump, the transformer positioned within the enclosure. The electric powered, multi-plunger pump includes an odd number of plungers and provides a first pump output greater than or equal to a second pump output associated with two quintuplex pumps.

In an embodiment, a pumping unit may include a multi-plunger hydraulic fracturing pump with an odd number of plungers greater than 5 (e.g., 7, 9, 11, etc.). The odd number of plungers may produce less kinematic flow ripple than a standard quintuplex pump, which is the most common type of pump in the oil service industry.

In an embodiment, a pumping unit may include a seven plunger (septuplex) hydraulic fracturing pump. The septuplex pump may produce less kinematic flow ripple than the

standard quintuplex, which is the most common type of pump in the oil service industry.

In various embodiments, one or more pumping units that include a septuplex pump may reduce the number of units required for hydraulic fracturing. By way of example only, 8 septuplex (7 plungers) pumps with 5" plungers and 10" stroke length can do the same work as 16 quintuplex pumps with 4.5" plungers and 8" stroke length (which is currently the most common pump in the industry). Accordingly, the septuplex pump with bigger plunger bores and longer stroke length than the common quintuplex pump can displace roughly 2 quintuplex pump units for every single septuplex unit.

Embodiments of the present disclosure also provide improved mobility and smaller footprints due to significantly short trailer length than common quintuplex hydraulic fracturing pump units.

Furthermore, various embodiments may arrange a transformer and variable frequency drive (VFD) in the same enclosure to minimize space requirements. Additionally, a VFD liquid cooling system may be packaged in the transformer enclosure.

Embodiments further include ladder access to gooseneck area for servicing or troubleshooting the transformer or VFD that is away from the "red zone" area of the high pressure pump discharge. Moreover, a VFD and a human-machine interface (HMI) screen may be arranged on the same service platform to allow for maintenance to work on the VFD while also seeing pump controls from the same place. Furthermore, a Motor Control Center (MCC) may also be positioned on the gooseneck of the trailer with ladder access from the ground.

Embodiments further include handrails incorporated on the platform to allow for easy maintenance.

BRIEF DESCRIPTION OF DRAWINGS

Some of the features and benefits of the present disclosure having been stated, others will become apparent as the description proceeds when taken in conjunction with the accompanying drawings, in which:

FIG. **1** is a schematic plan view of an embodiment of a fracturing operation, in accordance with embodiments of the present disclosure;

FIG. **2** is a side view of an embodiment of a pump unit, in accordance with embodiments of the present disclosure;

FIG. **3** is a side view of an embodiment of a pump unit, in accordance with embodiments of the present disclosure;

FIG. **4** is a top view of an embodiment of a pump unit, in accordance with embodiments of the present disclosure; and

FIG. **5** is a partial isometric view of an embodiment of a pump unit, in accordance with embodiments of the present disclosure.

While the disclosure will be described in connection with the preferred embodiments, it will be understood that it is not intended to limit the disclosure to that embodiment. On the contrary, it is intended to cover all alternatives, modifications, and equivalents, as may be included within the spirit and scope of the disclosure as defined by the appended claims.

DETAILED DESCRIPTION

The method and system of the present disclosure will now be described more fully hereinafter with reference to the accompanying drawings in which embodiments are shown. The method and system of the present disclosure may be in many different forms and should not be construed as limited to the illustrated embodiments set forth herein; rather, these embodiments are provided so that this disclosure will be thorough and complete, and will fully convey its scope to those skilled in the art. Like numbers refer to like elements throughout. In an embodiment, usage of the terms "about" or "approximately" include+/−5% of the cited magnitude. In an embodiment, usage of the term "substantially" includes+/−5% of the cited magnitude.

It is to be further understood that the scope of the present disclosure is not limited to the exact details of construction, operation, exact materials, or embodiments shown and described, as modifications and equivalents will be apparent to one skilled in the art. In the drawings and specification, there have been disclosed illustrative embodiments and, although specific terms are employed, they are used in a generic and descriptive sense only and not for the purpose of limitation.

When introducing elements of various embodiments of the present disclosure, the articles "a", "an", "the", and "said" are intended to mean that there are one or more of the elements. The terms "comprising", "including", and "having" are intended to be inclusive and mean that there may be additional elements other than the listed elements. Any examples of operating parameters and/or environmental conditions are not exclusive of other parameters/conditions of the disclosed embodiments. Additionally, it should be understood that references to "one embodiment", "an embodiment", "certain embodiments", or "other embodiments" of the present disclosure are not intended to be interpreted as excluding the existence of additional embodiments that also incorporate the recited features. Furthermore, reference to terms such as "above", "below", "upper", "lower", "side", "front", "back", or other terms regarding orientation or direction are made with reference to the illustrated embodiments and are not intended to be limiting or exclude other orientations or directions. Additionally, recitations of steps of a method should be understood as being capable of being performed in any order unless specifically stated otherwise. Furthermore, the steps may be performed in series or in parallel unless specifically stated otherwise. Additionally, recitation of pumps or motors having a certain output or voltage may refer to a rated output or a rated voltage and not necessarily and actual operating parameter.

Embodiments of the present disclosure describe a pumping unit that may include a multi-plunger hydraulic fracturing pump, such as a septuplex pump, to facilitate larger pumping capacity while also reducing a size of a footprint at a fracturing site. In various embodiments, the septuplex pump may be utilized to replace smaller pumps, such as quintuplex pumps. Additionally, the septuplex pump may include larger bores and/or longer stroke lengths. By way of example, the septuplex pump may be configured to displace approximately 2 quintuplex pump units for every single septuplex pump units, which may decrease the overall occupied footprint at the well site, among other benefits. In embodiments where even more plungers are used (e.g., 9, 11, etc.), even more quintuplex pump units can be displaced. The septuplex pump, or other multi-plunger pumps, may be part of the pumping unit which may also include control or monitoring components, such as a motor control center (MCC) or a variable frequency drive (VFD). In various embodiments, the septuplex pump is electrically powered, for example via a generator arranged at a fracturing site.

FIG. **1** is a plan schematic view of an embodiment of a hydraulic fracturing system **10** positioned at a well site **12**.

In the illustrated embodiment, pump trucks **14**, which make up a pumping system **16**, are used to pressurize a slurry solution for injection into a wellhead **18**. An optional hydration unit **20** receives fluid from a fluid source **22** via a line, such as a tubular, and also receives additives from an additive source **24**. In an embodiment, the fluid is water and the additives are mixed together and transferred to a blender unit **26** where proppant from a proppant source **28** may be added to form the slurry solution (e.g., fracturing slurry) which is transferred to the pumping system **16**. The pump trucks **14** (e.g., pumping units, pumping systems) may receive the slurry solution at a first pressure (e.g., 80 psi to 160 psi) and boost the pressure to around 15,000 psi for injection into the wellhead **18**. In certain embodiments, the pump trucks **14** are powered by electric motors. It should be appreciated that the pump trucks **14** may also be utilized for other operations, either at lower pressure or higher pressure than hydraulic fracturing operations. As an example, one or more pump trucks **14** may be utilized for pump down operations, which may be at lower pressures.

After being discharged from the pump system **16**, a distribution system **30**, such as a missile, receives the slurry solution for injection into the wellhead **18**. The distribution system **30** consolidates the slurry solution from each of the pump trucks **14** and includes discharge piping **32** coupled to the wellhead **18**. In this manner, pressurized solution for hydraulic fracturing may be injected into the wellhead **18**.

In the illustrated embodiment, one or more sensors **34**, **36** are arranged throughout the hydraulic fracturing system **10** to measure various properties related to fluid flow, vibration, and the like.

A power generation system **40** is shown, which may include turbines, generators, switchgears, transformers, and the like. In various embodiments, the power generation system **40** provides energy for one or more operations at the well site. It should be appreciated that while various embodiments of the present disclosure may describe electric motors powering the pump trucks **14**, in embodiments, electrical generation can be supplied by various different options, as well as hybrid options. Hybrid options may include two or more of the following electric generation options: Gas turbine generators with fuel supplied by field gas, CNG, and/or LNG, diesel turbine generators, diesel engine generators, natural gas engine generators, batteries, electrical grids, and the like. Moreover, these electric sources may include a single source type unit or multiple units. For example, there may be one gas turbine generator, two gas turbines generators, two gas turbine generators coupled with one diesel engine generator, and various other configurations.

In various embodiments, equipment at the well site may utilize 3 phase, 60 Hz, 690V electrical power. However, it should be appreciated that in other embodiments different power specifications may be utilized, such as 4160V or at different frequencies, such as 50 Hz. Accordingly, discussions herein with a particular type of power specification should not be interpreted as limited only to the particularly discussed specification unless otherwise explicitly stated. Furthermore, systems described herein are designed for use in outdoor, oilfield conditions with fluctuations in temperature and weather, such as intense sunlight, wind, rain, snow, dust, and the like. In embodiments, the components are designed in accordance with various industry standards, such as NEMA, ANSI, and NFPA.

FIGS. **2-5** include views of an embodiment of a pumping unit. The illustrated pumping unit includes a pump, which may be a septuplex pump, arranged on a trailer. It should be appreciated that other multi-plunger pumps may also be utilized with similar configurations, and in various embodiments, the multi-plunger pumps may have an odd number of plungers (e.g., 5, 7, 9, 11, etc.) as noted herein. The trailer includes wheels to facilitate moving the pumping unit between various locations, such as to different well sites. In various embodiments, the pump may be operable on the trailer, which may reduce the time it takes to set up a well site, for example, due to moving or staging the pumps. Further illustrated are fluid connections, a motor for providing electric power to the pump, and a goose neck that includes a shelter for housing a motor control center (MCC) and variable frequency drive (VFD), as will be described below.

FIG. **2** is a side view of an embodiment of a pumping unit **200** that illustrates the passenger side (e.g., left side from a perspective of facing a front of the trailer). In various embodiments, the pumping unit **200** includes a trailer **202** having wheels **204** to facilitate transportation of the pumping unit **200** to various locations. It should be appreciated that while embodiments may be described with reference to the trailer **202**, other configurations such as skids, platforms, truck beds, and the like may be utilized in various embodiments of the present disclosure. Accordingly, the use of the trailer in the figures is not intended to be limiting.

The illustrated trailer **202** includes a slide out platform **206**, which may be extendable away from a trailer body **208** in a direction substantially perpendicular to a trailer axis **210**. In other words, the slide out platform **206** extends outwardly relative to a plane of the page. The slide out platform **206** may be positioned on the illustrated passenger side, on the opposite driver side, or both. The slide out platform **206** may enable maintenance and service of various components of the pumping unit **200**. By way of example only, the slide out platform **206** may provide an increased surface area for maintenance personnel to operate. The slide out platform **206** may be aligned with various components, such as a pump **212** (e.g., a multi-plunger electric powered pump), motor **214**, blowers, and the like. Furthermore, various embodiments may include multiple slide out platforms **206**, such as one aligned with an enclosure **216** for an HMI **218**, VFD **220**, transformer **222**, and the like.

In this example, the illustrated trailer **202** may be referred to as a gooseneck trailer and includes a first height **224** and a second height **226**. In this example, the second height **226** is greater than the first height **224**. Different segments or portions of the illustrated embodiment are positioned at different locations along the trailer **202**. For example, in this example, the motor **214** and pump **212** are at a first area **228** that corresponds to the first height **224** and the enclosure **216** and associated components are at a second area **230** that corresponds to the second height **226**. It should be appreciated that this configuration may be reversed in other embodiments such that the motor and pump combination are at the second area **230**.

Additional components are also illustrated in FIGS. **2-5**, such as a motor coupling **232** between the motor **214** and the pump **212**. The motor coupling **232** may transmit rotational energy of the motor **214** to the pump **212** to pressure fluid that may be introduced into the pump **212** through an inlet **236** and driven out at a higher pressure from an outlet **234**. It should be appreciated that in various embodiments the motor **214** receives electrical energy from an on-site power source, which may include generators, turbines, power storage components, and the like. Accordingly, the fleet utilizing the pumping unit **200** may be electrically powered, thereby

overcoming problems associated with traditional units that are powered using diesel or gasoline engines.

In this example, the trailer **202** has a trailer length **238** extending from a front end **240** to a back end **242**. It should be appreciated that "front" and "back" are used illustratively, and in this instance the front end **240** refers to the second area **230** where the trailer **202** would be coupled to a prime mover and the back refers to the first area **228**. In various embodiments, the trailer length **238** may be substantially equal to a trailer length for a unit that includes a single quintuplex or two quintuplex pumps. As a result, utilizing embodiments of multi-plunger pumping units, such as the illustrated unit that includes a septuplex pump, may provide an increased pumping capacity while occupying a similar or smaller footprint.

FIG. **3** is a side view of the pumping unit **200** from a driver side (e.g., right side when facing the front end **240**). This example further illustrates the placement of various features of the pumping unit **200**, including the pump **212**, motor **214**, and enclosure **216**, which may house one or more of the HMI **218**, VFD **220**, and transformer **222**. Moreover, as noted above, the slide out platform **206** may also be utilized on this side of the trailer **202** to facilitate maintenance operations. Additional features illustrated but not specifically described include auxiliary equipment **300** for the pump **212** and/or motor **214**, such as a pump lube oil cooler, pump plunger lube system, blowers, and the like.

FIG. **4** is a top plan view of an embodiment of the pumping unit **200** illustrating the layout of the trailer **202** including the front end **240** and the back end **242**. In this example, the front end **240** includes the enclosure **216** housing various components such as the HMI, VFD, transformer, a cooling system, and the like, which are not illustrated for clarity with the present discussion. In this example, an access platform **400** is provided such that an operator may enter the enclosure **216**. As noted, the enclosure **216** may be climate controlled in order to provide a working environment for the operator as well as maintain a temperature and/or humidity level for the various electronic components contained therein. It should be appreciated that the components utilized with respect to the enclosure **216** may be considered Class 1, Division 1 compliant.

In certain embodiments, the access platform **400** includes a cable routing system **402** extending below a grating **404** which enables routing and various cables, such as cables from the generator or the like providing power to the transformer. The routing system **402** may include one or more channels that receive and direct the cables to a desired location. The grating **404** may be removable and/or pivotable to provide ready access to the one or more channels. Additionally, as shown, ingress and egress is provided by ladders or steps **406** provided on both sides of the platform **400**.

As shown in FIG. **4**, the first area **228** and second area **230** are separated or substantially spaced apart from one another, but are still structurally supported by the trailer **202**. Accordingly, personnel working in the or around the enclosure **216** may be separated or within an appropriate distance from the pump **212** and/or motor **214** to facilitate operations.

FIG. **5** is an isometric view of an embodiment of the back end **242** of the pumping unit **200** illustrating the inlet **236** (e.g., inlet piping), outlet **234** (e.g., outlet piping), and auxiliary equipment **300**, such as the lube oil cooler. Additionally, a portion of the slide out platform **206** is also visible proximate the pump **212**, which as noted above, may provide a working surface for maintenance or inspection of various components of the system.

As noted here, embodiments of the present disclosure illustrate the pumping unit **200** that includes the slide out platform for service of the pump or motor blowers, a coupling, an HMI, HMI-VFD, VFD/transformer enclosure, service platform for VFD/transformer, suction piping, and high pressure discharge piping. The pumping unit **200** may include a multi-plunger pump, such as a septuplex pump, motor, coupling, HMI, HMI-VFD platform, VFD/Transformer enclosure, service platform for VFD/Transformer, septuplex pump lube oil cooler, and pump plunger lube system.

In various embodiments, as noted above, the length **238** of the trailer **202** may be less than other pump units that may include multiple pumps arranged along the bed. For example, a trailer that includes two or more pumps may be longer than the trailer **202**, which may be difficult to transport between well sites and also difficult to stage at the well site. However, other trailers may include multiple pumps in order to provide sufficient pumping capacity. As described, embodiments of the present disclosure may utilize the septuplex pump, or other pumps such as pumps including 9 plungers, 11 plungers, etc., with a bigger plunger bores and a longer stroke length to provide sufficient pumping capacity that may be substantially equal to two quintuplex pumps. Accordingly, the footprint at the well site may be decreased while also providing trailers that may be easier to transport and maneuver. Furthermore, it should be appreciated that while trailers are being referenced and illustrated, embodiments are not limited to trailers. For example, the trailer may be replaced with a skid, which may be loaded on a flat bed or the like, and may be movable to a desired location at the well site. In such a configuration, the skid may have a skid length that may also be shorter than a trailer length or skid length where multiple quintuplex pipes are used.

In embodiments, the pumping unit includes the single electric powered multi-plunger fracturing trailer. In this example, the pump is a septuplex pump that is capable of pumping inhibited acid and other proppant laden stimulation fluids and is further remotely operated from a control unit. The single electric motor is capable of delivering approximately 4000 BHP or approximately 3800 HHP based on efficiency losses, pump limitations, and varying conditions at time of operations. However, this configuration is for example purposes only and different sizes of motors and/or pumps may be utilized. Moreover, while embodiments may be described with respect to the trailer, other configurations such as skid-mounted or truck mounted systems may also be utilized with embodiments of the present disclosure that may use similar pumps.

Embodiments may be configured to reduce vibration during operations. For example, the pump unit may be configured such that while delivering full horsepower without exceeding the pump ratings, there are no components and/or substantially no components that will vibrate with excessive amplitudes in resonance with the forcing vibrations of the electric motor or pump. Also there are no and/or substantially no excessive rotational vibrations of electric motor or pump due to transmitted torque and the flexibility of the trailer and mounting systems. Due to the lower kinematic flow ripple of a septuplex pump versus a quintuplex, the septuplex will operate more smoothly. This may also be true for other pump configurations, such as pumps that include 9 plungers, 11 plungers, etc. Accordingly, there may be a reduced need to include dampening materials along the trailer and/or skid. Additionally, the reduced vibrations may enable components of the pumping unit to be

positioned closer together, thereby further reducing the length of the trailer and providing a compact system.

In the illustrated embodiment, the VFD system is installed on the trailer and is packaged inside the transformer enclosure **216**. The unit is capable of operating during prolonged pumping operations. The unit will typically be capable of operating in temperature ranges of approximately −40 C to 55 C, for example, but other ranges may also be utilized within embodiments of the present disclosure. The VFD may also be utilized to acquire motor diagnostics and may, in embodiments, provide one or more control signals to the motor. For example, the motor may receive a transmitted signal from the VFD to increase or decrease a rotational speed of the motor.

The illustrated trailer system is a heavy-duty single drop trailer in the embodiments shown in FIGS. **2-5**. The trailers, as an example, may include several different features including, but not limited to a heavy-duty twin beam construction. This construction may provide sufficient strength to support and transport the pump **212**, motor **214**, and the like. As will be appreciated, a larger pump **212** may weigh more than a smaller pump, and as a result, a stronger trailer may be beneficial for prolonged operations. Additionally, the heavy-duty construction may also provide further vibration dampening.

Various embodiments may also include other features that facilitate loading, unloading, transportation, and storage of the trailer. By way of example, embodiments that include the trailer may include an approximately 52" kingpin setting (e.g., a 52" distance from the center of the fifth wheel connection to the center of the rear axle group). As will be appreciated, this distance may affect the turning radius of the wheels, with a longer kingpin setting providing a larger turning radius. The illustrated landing legs may be rated for approximately 160,000 pounds, thereby providing sufficient load capacity to enable operation of pumping unit. For example, the load capacity may be sufficient to enable the pumping units to be hauled to the well site, staged via the landing legs, and then operated using the landing legs, which reduces the presence of additional equipment, such as the trucks for hauling the pumping units, at the site. Additionally, the trailers may include an air ride suspension to provide a smoother, consistent ride quality. This system may also be coupled with ABS brakes and a heavy-duty tri or quad axle configuration. Various embodiments may also include 11.00 R 22.5 radial tires and a 2" SAE king pin with a rub plate. Furthermore, light mounted stop/turn clearance and mud flaps may be provided along with a rear bumper having a tow hook and additional running lights to enable highway use. The trailer may also include front and rear fenders.

FIGS. **2-4** illustrate the motor **214**, which may provide the power to the pump **212** and also receives electricity from an onsite power plant in certain embodiments, such as a turbine generator. The illustrated motor **214** is a horizontal AC cage induction motor. It should be appreciated that various features and operating characteristics of the motor **214** may be particularly selected for a variety of different applications and operating conditions. In an embodiment, the motor **214** is capable of operation of upwards of 4000 HP with an operating voltage of 690V. The motor may be a 3 phase, insulation Class H, form wound, single shaft motor. It may include an oilfield hub and an air-condensation strip heater. In certain configurations, the motor also includes 100 ohm platinum resistance temperature detectors (RTDs) installed on windings (2 per phase) along with two cooling blowers rated at 15 HP, 3600 RPM, and 460 V.

As noted above, there is the motor coupling **232** arranged between the pump **212** and the motor **214** to transmit energy to the pump **212**. In the illustrated embodiment, the coupling utilized for connecting electric motor to the pump does not exceed the manufacturer's recommended maximum angle under normal operation condition. The coupling includes a guard with an access panel to enable the pump to be turned without guard removal.

In various embodiments, a septuplex pump is utilized to pump fluids at a high pressure into a wellbore. However, as noted above, septuplex is provided as an example only. It should be appreciated that various different pumps, having a variety of different operating conditions and features, may be utilized. For example, the pumps may operate at a variety of different voltage inputs, with different voltage requirements, with different power inputs, and the like. By way of example only, the septuplex pump, or other pumps, may include stainless steel or alloy steel fluid ends. Further features may include a main discharge connection, bleed connection, center gauge connection, and zoomie suction manifold. In certain embodiments, the stroke length for the pump is approximately 10. However, it should be appreciated that this length may be adjusted and particularly selected based on a desired performance. As stroke length increases, pump flow rate may also increase. Additionally, in embodiments, the plunger size is approximately 5.0". However, it should be appreciated that this size may be adjusted and particularly selected based on a desired performance.

In embodiments, a double connection suction manifold extends into a zoomie style manifold that is bolted directly on the pump's fluid end. The double connections may be winged union connections and include two butterfly valves. A removable pulsation dampener is installed in the inlet side, in embodiments. The pump's rear discharge port is connected to the discharge manifold via 3" sub-connections. A 2" connection is installed on the pump center gauge opening and is utilized for the unit pressure transducer. In embodiments, the rear discharge manifold extends to the back of the trailer.

An electronically powered plunger lube pump system with pumping elements may also be installed to provide lubricant to the plungers. This system may be equipped with a pump speed input to adjust lubrication timing based on speed. However, other features may also be integrated, such as various instrumentation systems to monitor lube reservoir levels, pressures, and the like.

The power end of the pumps is lubricated by a hydraulic pump driven by an auxiliary electric motor. The power end lubrication system includes components such as relief valve, filters, instrumentation, plumbing, and lube oil reservoir. In various embodiments, the system further includes a transformer system comprised of a 4,000 kVA step down transformer and associated electrical components mounted on the trailer.

Embodiments further includes a transformer enclosure structure **216** constructed and braced for portable movement that has, by way of example only, features including a heavy-duty construction to enable movement and transportation of the trailer without disassembly of the enclosure **216**. As an example, the construction may include cross-bracing and the like to provide improved strength and stability. Furthermore, the enclosure **216** may include a copper ground bus. NEMA 3R outdoor ventilation, and an ANSI 61 paint finish.

The enclosure **216** may house the transformer **222**. In various embodiments, the transformer corresponds to a 4,000 kVA step down transformer. The transformer may be

3-phase transformer operable at 60 Hz with an 80/80 C rise, and may use either ambient air (AA) or forced air (FFA) for heat removal. The transformer may be manufactured with 7.0 percent impedance with an error range within an ANSI standard tolerance with a phase relation Dyn1.

The transformer may be a high voltage 13.8 kV delta having features including, but not limited to, 95 KV basic insulation level (BIL), taps, and a copper conductor. The transformer may also include a low voltage 600Y/346 with a 30 DV BIL, taps, and a copper conduction. Various embodiments also include application, rectifier duty, 6 pulse along with a core/coil with a high voltage (HV) to low voltage (LV) electrostatic shield with a K-factor rating. Embodiments may enable monitoring of control power and temperature. Furthermore, the transformer may include interconnect cables from a switchgear to the VFD. The cables may be 545 DLO cables installed to connect the transformer system to the VFD.

The VFD system **220** may be particularly selected to meet the electrical AC drive requirements for electric frac trailers that utilize 3 phase, 60 Hz, 690 volt electrical power sources. The system may also be built in strict accordance with NEMA, ANSI, and NFPA regulations. Additionally, design elements may meet the harsh environmental conditions typically found in oilfields. In certain embodiments, the VFD includes a 650V motor voltage with a drive current of approximately 2429 A. The VFD may have an overload rating of approximately 100% for 60 seconds and a supply voltage of approximately 690 V, 6 pulse. The supply frequency may be 60 Hz and the VFD may also include inverter modules and a cooling system that may utilize water/glycol as the cooling fluid. However, in certain embodiments, the VFD may be a 12 or 24 pulse drive.

Further embodiments may include drives having 2500 A circuit breakers with UVR trip coils and input line reactors. Semiconductor fuses with blown-fuse switches may also be incorporated. Control components may also be utilized to enable remote operation of various components of the pumping unit. Additionally, liquid cooled rectifier, 3 inverter IGBT modules, and 3 SMPS modules may also be incorporated into the system. Various configurations may include shielded ribbon cables and a digital controller with parameter based operations and I/O board. A door-mounted HMI may also be used for setup, monitoring, and diagnostics. Additional features may also include a MV 4000 I/O panel, control power transformer, a 24 V power supply, and relays, indicating lights, and emergency stop push buttons.

The VFD may also incorporate liquid cooling, as described above, that may include welded stainless steel piping coolant headers with hose connections to the modules. Stainless steel piping is used for VFD module headers. Each module is connected to the supply and return headers with a three-quarter inch hose and isolation valve, in an embodiment.

The VFD enclosure of the illustrated embodiment, but which may also be integrated with or replaced by other configurations, is an IP66 enclosure that includes two internal heat exchangers for removing heat form the air inside of the drive enclosure. Additionally, four frames are suppled in the enclosure for power cabling, control cables, and piping. Furthermore, a rain shield which extends out over the service platform to protect the components from rain while being serviced. The unit further includes has a dry type 3 phase, 60 Hz, power distribution transformer with 690 V primary, and 240/120 V secondary with taps.

The power control enclosure, which may be incorporated into or be part of the enclosure **216**, is an outdoor weatherproof enclosure. The structure is constructed and braced for portable movement and includes access panels, external off unit connections wired to plug-in connectors accessible from outside, primed and finished painted inside and out, LED external lighting, cooling provided via liquid cooled radiator, and in embodiments the frac pump motor is hard wired on the unit.

In embodiments, the MCC and distribution panel is a 690V power distribution panel/MCC that is fed by a circuit breaker independent from the VFD circuits. By way of example, the MCC may be a single MCC that is seismic zone 4. The MCC may include a 400 A main bus with a rating of approximately 42,000 AIC, 60 Hz, and be 3 phase, 3 wire.

In embodiments, there are four size 1 full voltage non-reversing starters of 10 HP with hands off auto switch. In further embodiments, there are two size 2 full voltage non-reversing starters of 25 HP with hands off auto switch. Additionally, there is one lighting panel, 150 A, with circuit breakers as required.

As noted above, various instrumentation systems may also be included in order to monitor various aspects of the system. For example, supplied and installed on each of the pump discharge unit may be a pressure transducer. In an example, a 0-15.000 PSI pressure transducer with hammer union connections may be utilized, but other connections and pressure transducers may be used. The transducers are installed with a protective guard. Moreover, there may be a single touchscreen display for local pump control. Furthermore, the unit comes installed with either Ethernet communications or RS-485 serial, thereby facilitating remote operation and data transmission. It may also be equipped with wireless communications to sensors in lieu of cabled communication and sensor connections.

Various additional components of the instrumentation system and support systems may include an access hatch on the coupling guard, cable gland protection, check valve bracket support, and spools for the frac cables. Furthermore, various embodiments may also incorporate step grip tape on the handrails and ladder, grounding for the trailer, ladder/stair access with handrails, a land gear crank, an oil radiator bracket, and a power end tank temp sensor. Furthermore, configurations may also provide a fire extinguisher along the trailer.

As noted above, the slide out platform **206** may be incorporated for work on the pump, motor, and motor cooling blowers. In various configurations, the slide out platform **206** may also include a safety hinged door. Embodiments may also include VFD over pressure trip wiring which can bypass the normal S-curve ramp down used to increase electrical and mechanical component longevity to instantly stop the electric motor and associated pump. Furthermore, the VFD and associated control system can have wireless communication capabilities. Additionally, Victaulic™ clamps may be used on the suction side piping of the pump. In certain configurations, a transformer louver design may include a large metal mesh filter to prevent dust/dirt intrusion. Additionally, load shedding may be incorporated via intelligent pump control throttle control and other load responses.

As described, in various embodiments the system may be powered by an onsite generator, such as a turbine generator. However, it should be appreciated that various power generation operations are available, including any one or more, alone or in combination, of the following: one or more turbine generators, one or more diesel generators, one or

more natural gas generators, grid power, any other electrical source, or a combination thereof.

Furthermore, as described, in embodiments various specifications are provided for illustrated purposes and are not intended to restrict or otherwise narrow the scope of the pending disclosure. For example, various other combinations and features of the above may be utilized. For example, the multi-plunger pump can have any odd numbers of plungers greater than 5 (e.g., 7, 9, 11, etc.). In various embodiments, the greater the odd number, the less kinematic ripple will exist. Additionally, the stroke length of the pump can be 8" or more. Furthermore, the pump unit can be on a trailer, skid, body load, or any other platform. Additionally, there can be multiple frac pump units. Moreover, there can be diesel pumps as well as electric pumps (hybrid fleet). Additionally, there can also be an intensifier pump connected hydraulically to the pumps. Additionally, one or more pumps can be used to pump down a tool into the well instead of doing pressure pumping. Furthermore, voltages may be different. Also, the components described can be separated and put on separate platforms that may themselves be on a trailer, skid, body load, or other platform.

Furthermore, alternative configurations may also include the secondary windings on the transformer being tapped at 690V, 600V, 480V, and 240/120V. Additionally, the windings on the transformer can have additional taps for +/−2.5%, 5%, 7.5%, and 10% to adjust the secondary voltage. This is used to combat voltage drop due to long range power transmission. Moreover, the power cables feeding the transformer can be jacketed 3 phase cables with imbedded ground and ground check conductors, or they can be single conductor cables with one or more conductors required per phase. Also, primary transformer voltage can be 25 KV, 15 KV, 13.8 KV, 4160V, or 2000V. In various embodiments, the transformer can act as a step up transformer, step down transformer, or as an isolation transformer with a 1:1 primary to secondary voltage ratio. Additionally, the transformer can be wye-wye, wye-delta, delta-delta, or delta-wye configuration. In certain embodiments, an electric soft starter could also be used in place of a VFD for the primary frac motor. Further configurations may include VFD could be up to 5000 BHP and the motor could be rated to up to 5000 BHP. Additionally, the fluid pump could be rated for up to 5000 HHP. Moreover, the VFD can be air cooled instead of liquid cooled. Moreover, the VFD can use a combination of both air cooling and liquid cooling. Also, the transformer and VFD enclosures can have a positive pressure system to keep dust out. The transformer can use liquid or air cooling. Moreover, the VFD can be packaged separately from the transformer enclosure and the MCC can be packaged separately from the VFD and/or transformer enclosure.

The present disclosure described herein, therefore, is well adapted to carry out the objects and attain the ends and advantages mentioned, as well as others inherent therein. While a presently preferred embodiment of the disclosure has been given for purposes of disclosure, numerous changes exist in the details of procedures for accomplishing the desired results. These and other similar modifications will readily suggest themselves to those skilled in the at, and are intended to be encompassed within the spirit of the present disclosure disclosed herein and the scope of the appended claims.

We claim:

1. A hydraulic fracturing system, comprising:

a support structure having a first area at a first height and a second area at a second height, the first and second areas adjacent one another;

an electric powered, multi-plunger pump with an odd number of plungers, arranged in the first area, the electric powered pump coupled to a well, via outlet piping, and powered by at least one electric motor, also arranged in the first area;

a variable frequency drive (VFD), arranged in the second area, connected to the at least one electric motor, the VFD configured to control at least a speed of the at least one electric motor; and

a transformer, arranged in the second area, the transformer positioned within an enclosure with the VFD, the transformer configured to distribute power for operation of the electric pump.

2. The hydraulic fracturing system of claim **1**, further comprising:

a slide out platform integrated into the first area, the slide out platform being driven between a retracted position and a deployed position, wherein the deployed position provides a work area proximate the electric powered, multi-plunger pump.

3. The hydraulic fracturing system of claim **1**, further comprising:

a work platform proximate the enclosure in the second area, the work platform providing access to the enclosure, the work platform arranged such that the enclosure is between the work platform and the first area.

4. The hydraulic fracturing system of claim **1**, further comprising:

a cooling system for the enclosure, the cooling system being a liquid cooling system thermally coupled to at least one of the VFD or the transformer.

5. The hydraulic fracturing system of claim **4**, wherein the liquid cooling system includes water or glycol.

6. The hydraulic fracturing system of claim **1**, wherein the electric powered, multi-plunger pump is a septuplex pump having seven plungers.

7. The hydraulic fracturing system of claim **1**, wherein the electric powered, multi-plunger pump includes at least one of 9 plungers or 11 plungers.

8. The hydraulic fracturing system of claim **1**, wherein the electric powered, multi-plunger pump includes more than 5 plungers.

9. The hydraulic fracturing system of claim **1**, wherein the first area is opposite the second area and the second area includes a hitch for coupling to a prime mover.

10. The hydraulic fracturing system of claim **1**, wherein the electric powered, multi-plunger pump is a single pump and a first pump output meets or a exceeds a second pump output associated with two quintuplex pumps.

11. A hydraulic fracturing system, comprising:

an electric powered, multi-plunger pump, arranged on a support structure, the electric powered multi-plunger pump powered by at least one electric motor;

a variable frequency drive (VFD), arranged on the support structure, connected to the at least one electric motor to control a speed of the at least one electric motor, the VFD positioned separate from the electric powered, multi-plunger pump and within an enclosure; and

a transformer, arranged on the support structure, configured to distribute power for operation of the electric powered, multi-plunger pump, the power being received from at least one generator at a voltage higher

than an operating voltage of the electric powered pump, the transformer positioned within the enclosure;

wherein the electric powered, multi-plunger pump includes an odd number of plungers configured to reduce kinematic flow ripple.

12. The hydraulic fracturing system of claim **11**, further comprising:

a slide out platform proximate the electric powered, multi-plunger pump being driven between a retracted position and a deployed position, wherein the deployed position provides a work area proximate the electric powered, multi-plunger pump.

13. The hydraulic fracturing system of claim **11**, further comprising:

a work platform proximate and external to the enclosure, the work platform providing access to the enclosure, wherein the work platform is positioned at an elevation greater than the electric powered, multi-plunger pump.

14. The hydraulic fracturing system of claim **11**, further comprising:

a cooling system for the enclosure, the cooling system being a liquid cooling system thermally coupled to at least one of the VFD or the transformer.

15. The hydraulic fracturing system of claim **14**, wherein the liquid cooling system includes water or glycol.

16. The hydraulic fracturing system of claim **11**, wherein the electric powered, multi-plunger pump is a septuplex pump having seven plungers.

17. The hydraulic fracturing system of claim **11**, wherein the electric powered, multi-plunger pump includes at least one of 9 plungers or 11 plungers.

18. The hydraulic fracturing system of claim **11**, wherein the electric powered, multi-plunger pump includes more than 5 plungers.

19. The hydraulic fracturing system of claim **11**, wherein the motor is powered by at least one of a turbine generator, a diesel generator, a natural gas generator, grid power, or a combination thereof.

20. The hydraulic fracturing system of claim **11**, wherein a first length of the support structure is less than or equal to a second length of a second support structure associated with two quintuplex pumps.

* * * * *