US 20200040878A1

(19) United States

(12) Patent Application Publication

Morris

(10) Pub. No.: US 2020/0040878 A1

(43) Pub. Date: Feb. 6, 2020

(54) **ENGAGEMENT AND DISENGAGEMENT WITH EXTERNAL GEAR BOX STYLE PUMPS**

(71) Applicant: **TYPHON TECHNOLOGY SOLUTIONS, LLC**, The Woodlands, TX (US)

(72) Inventor: **Jeffrey G. Morris**, The Woodlands, TX (US)

(21) Appl. No.: **16/525,373**

(22) Filed: **Jul. 29, 2019**

Related U.S. Application Data

(60) Provisional application No. 62/715,165, filed on Aug. 6, 2018, provisional application No. 62/786,174, filed on Dec. 28, 2018.

Publication Classification

(51) **Int. Cl.**

F04B 23/04	(2006.01)
F04B 17/05	(2006.01)
F04B 17/03	(2006.01)
E21B 43/26	(2006.01)

(52) **U.S. Cl.**

CPC ***F04B 23/04*** (2013.01); ***E21B 43/26*** (2013.01); ***F04B 17/03*** (2013.01); ***F04B 17/05*** (2013.01)

(57) **ABSTRACT**

A system and a method for producing fracturing fluid, comprising: engaging an engagement coupling attached to one end of a gear box dual shaft to a gear box connector of an external gear box, wherein the external gear box is part of a pump; rotating the gear box dual shaft to drive the pump after engaging the engagement coupling with the gear box connector; disengaging the engagement coupling from the gear box connector; and rotating the gear box dual shaft without driving the pump after disengaging the engagement coupling with the gear box connector.

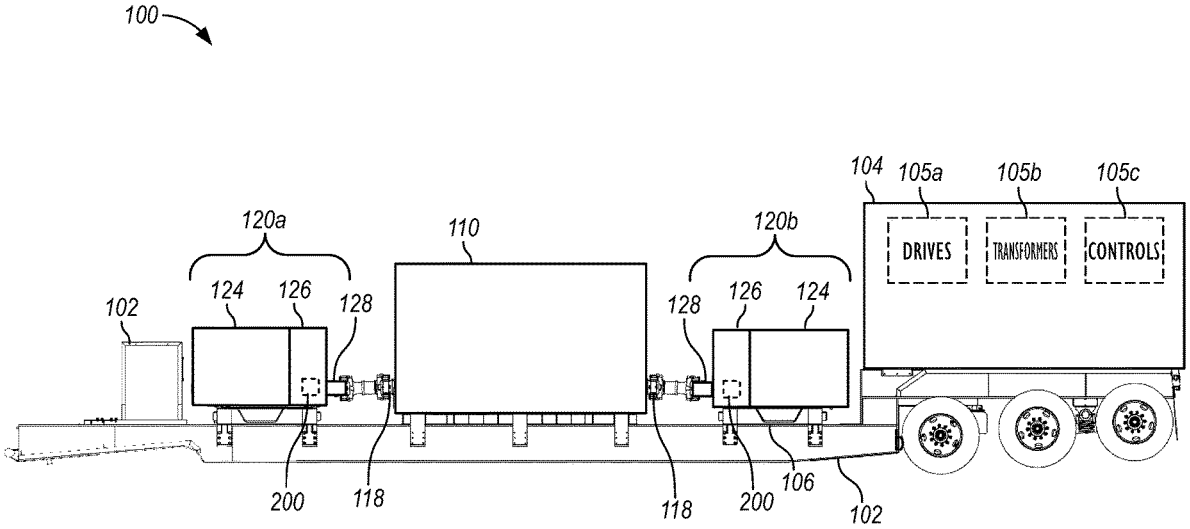

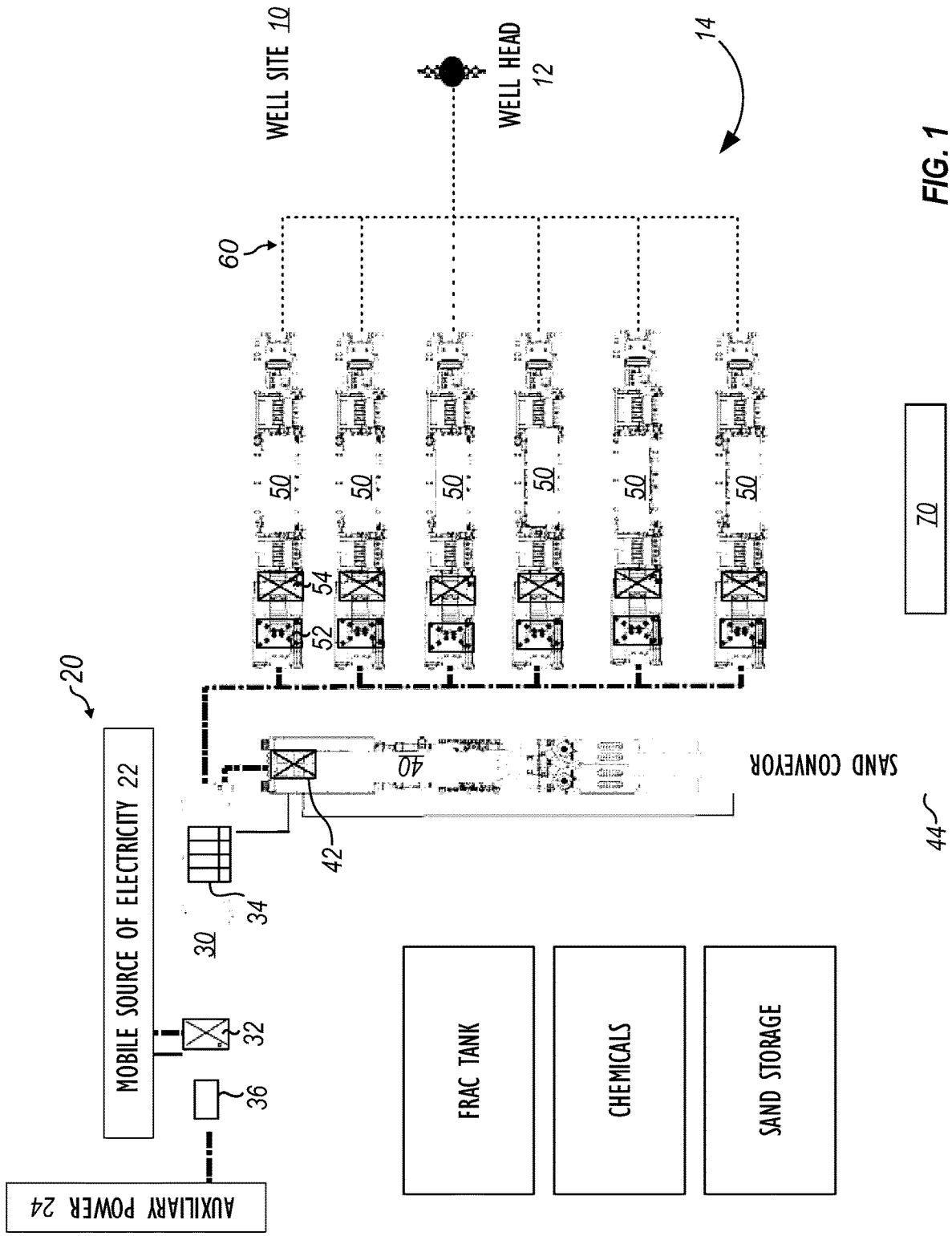
WELL SITE 10
WELL HEAD 12
14
60
50
54
52
70
20
MOBILE SOURCE OF ELECTRICITY 22
40
SAND CONVEYOR
42
44
34
30
32
36
FRAC TANK
CHEMICALS
SAND STORAGE
AUXILIARY POWER 24

FIG. 1

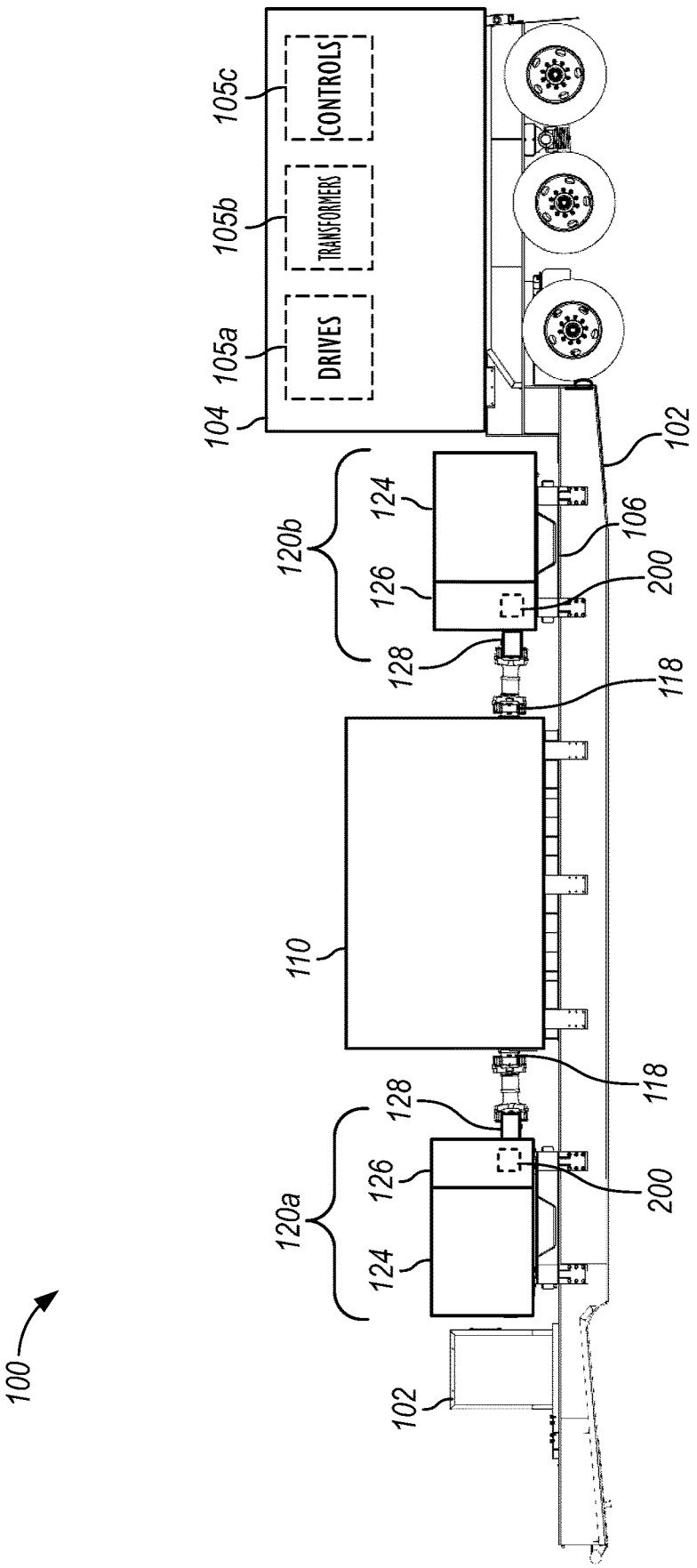
100
102
104
105a
DRIVES
105b
TRANSFORMERS
105c
CONTROLS
120a
120b
124
126
128
110
118
200
106

FIG. 2

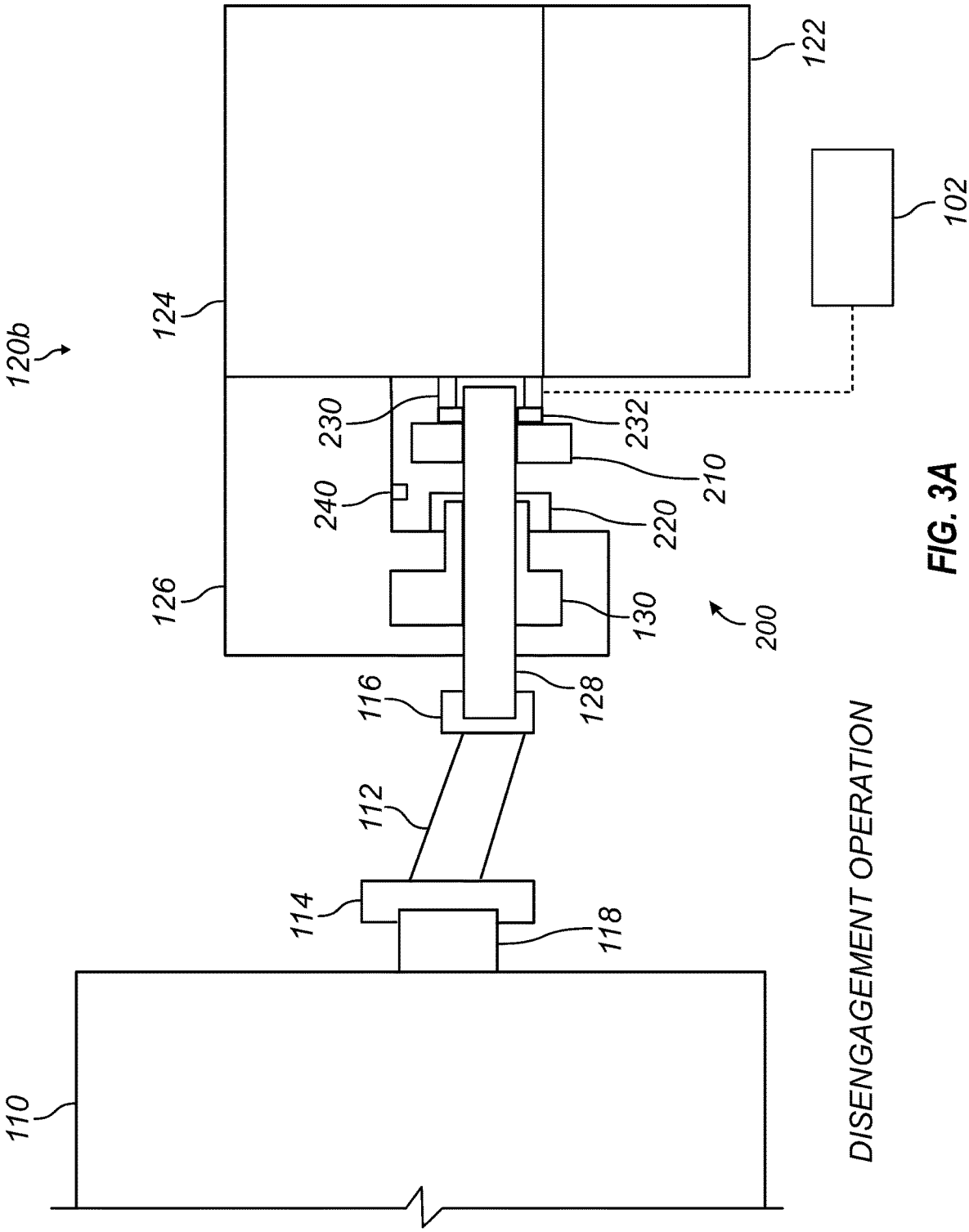
120b
124
126
122
102
230
232
240
210
220
130
200
116
128
112
114
118
110
DISENGAGEMENT OPERATION

FIG. 3A

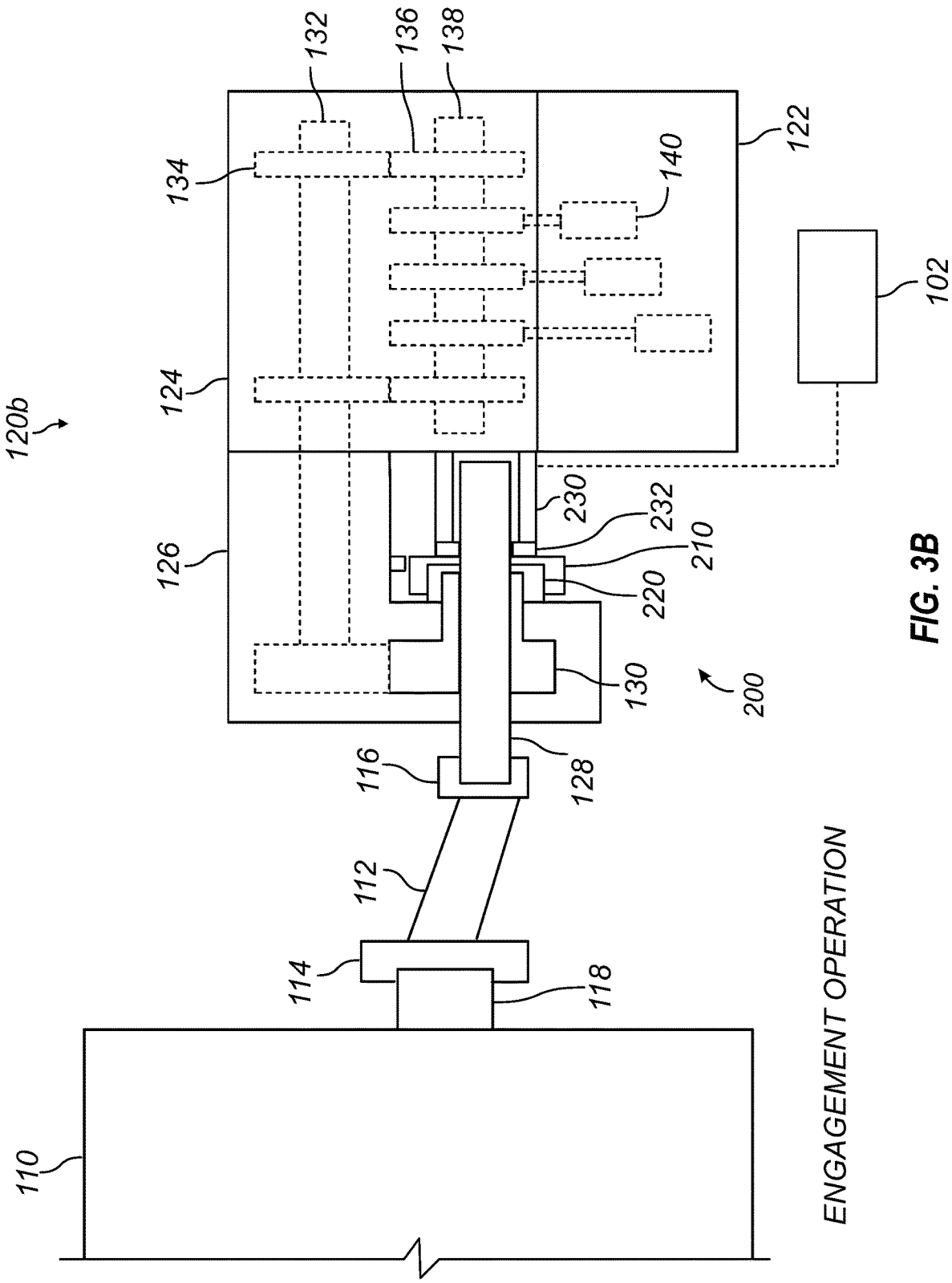
120b
132
136
138
134
124
126
122
140
102
230
232
210
220
130
200
116
128
112
114
118
110
ENGAGEMENT OPERATION

FIG. 3B

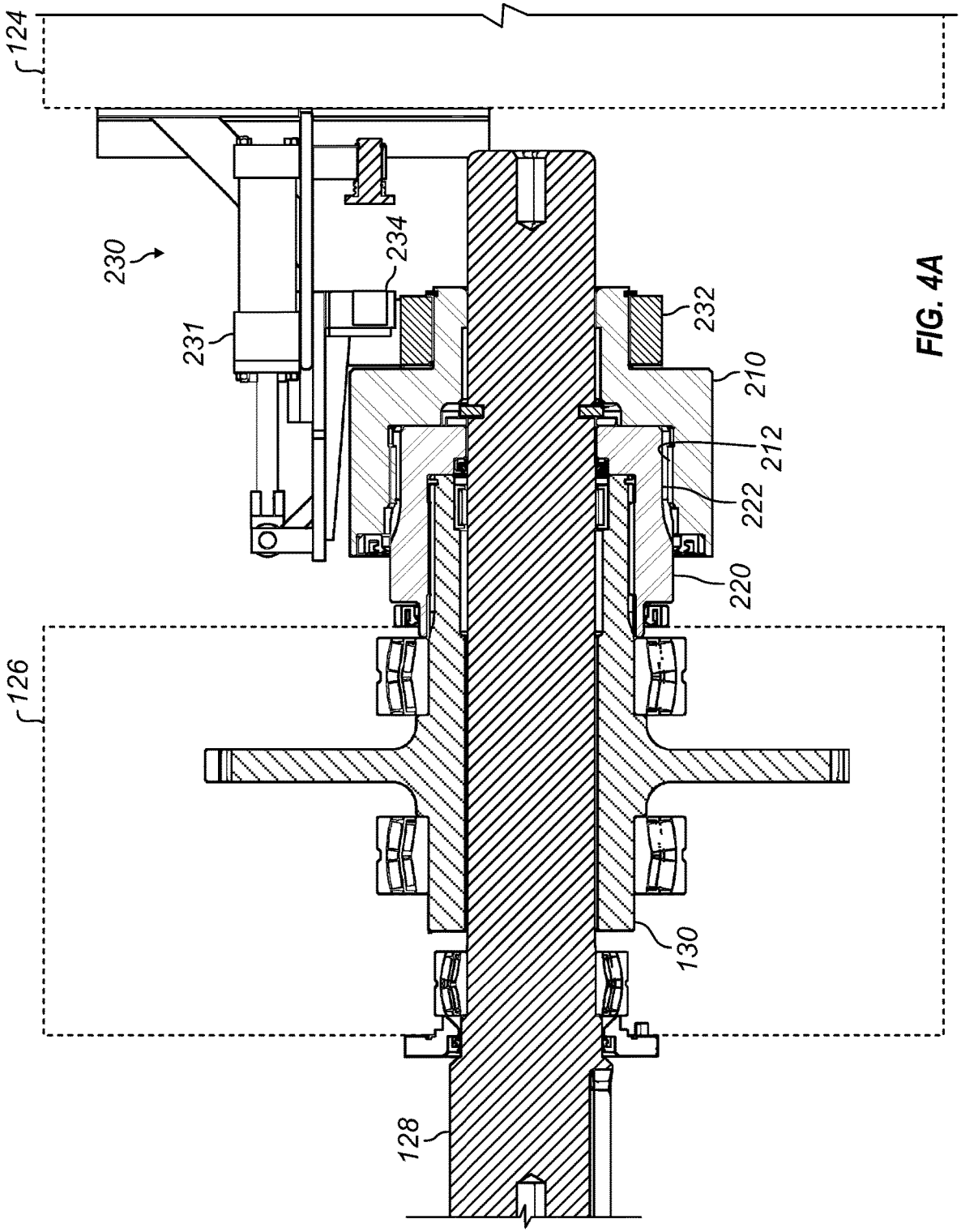

FIG. 4A

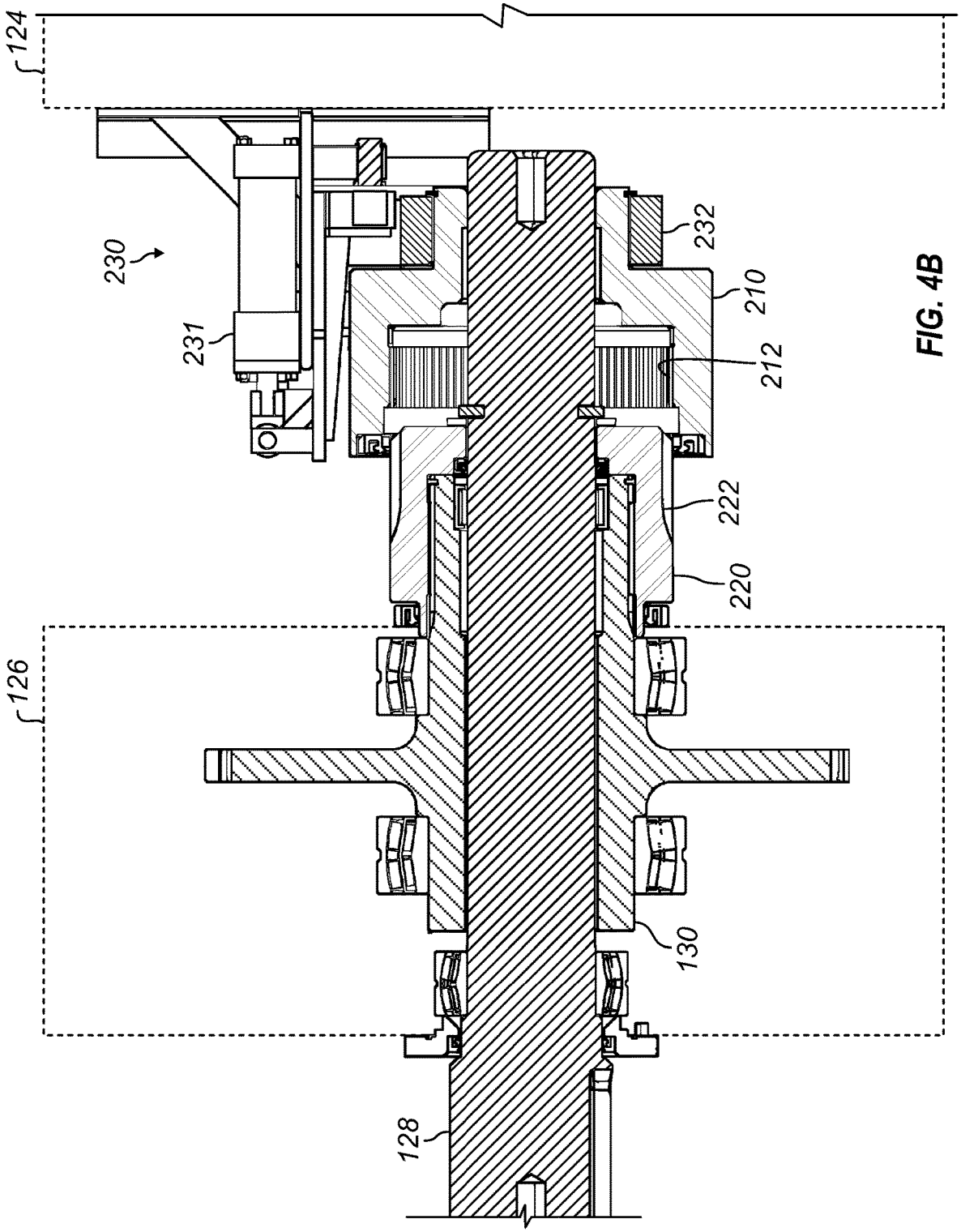

FIG. 4B

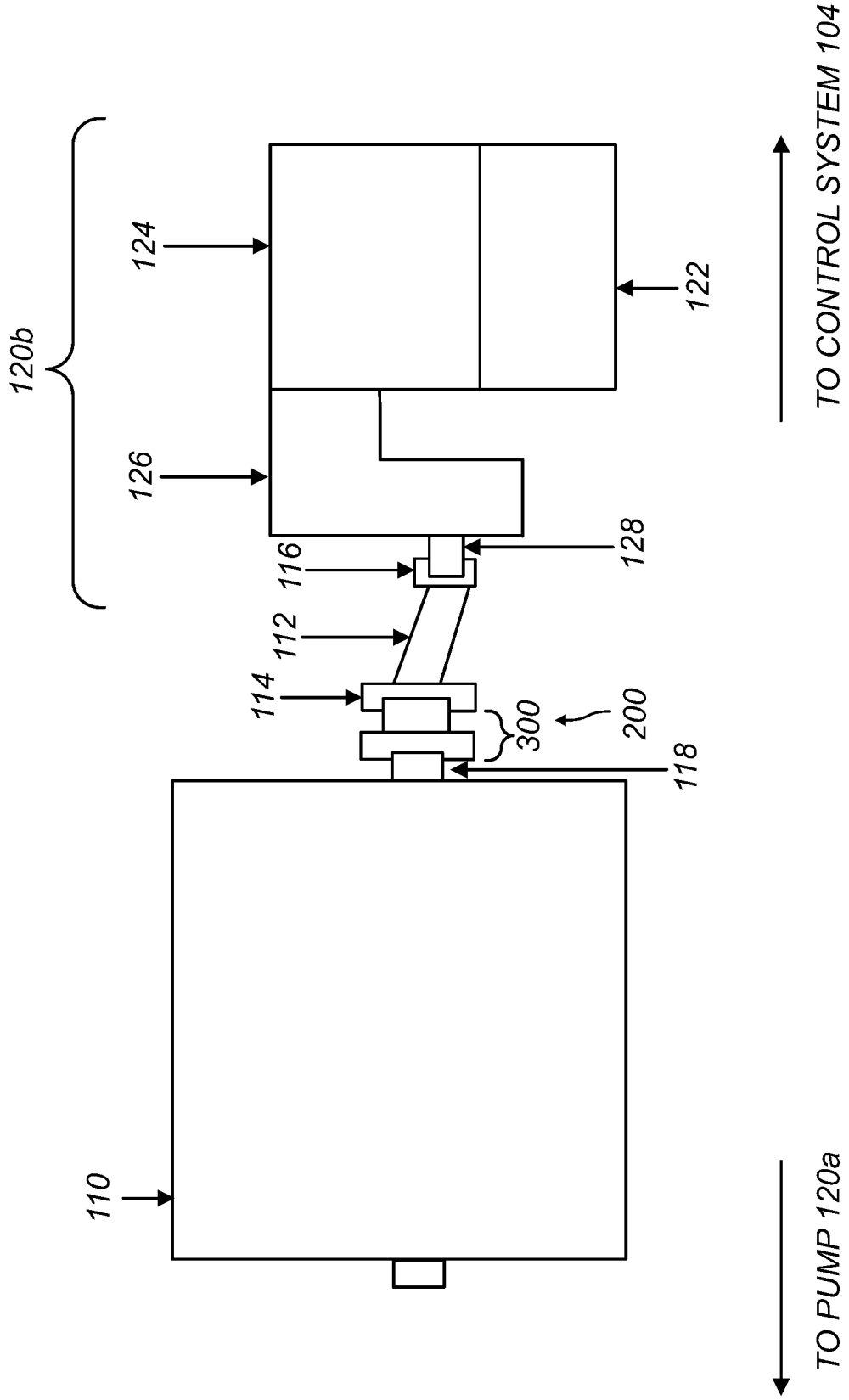
120b
124
126
122
TO CONTROL SYSTEM 104
116
128
112
114
300
200
118
110
TO PUMP 120a

FIG. 5

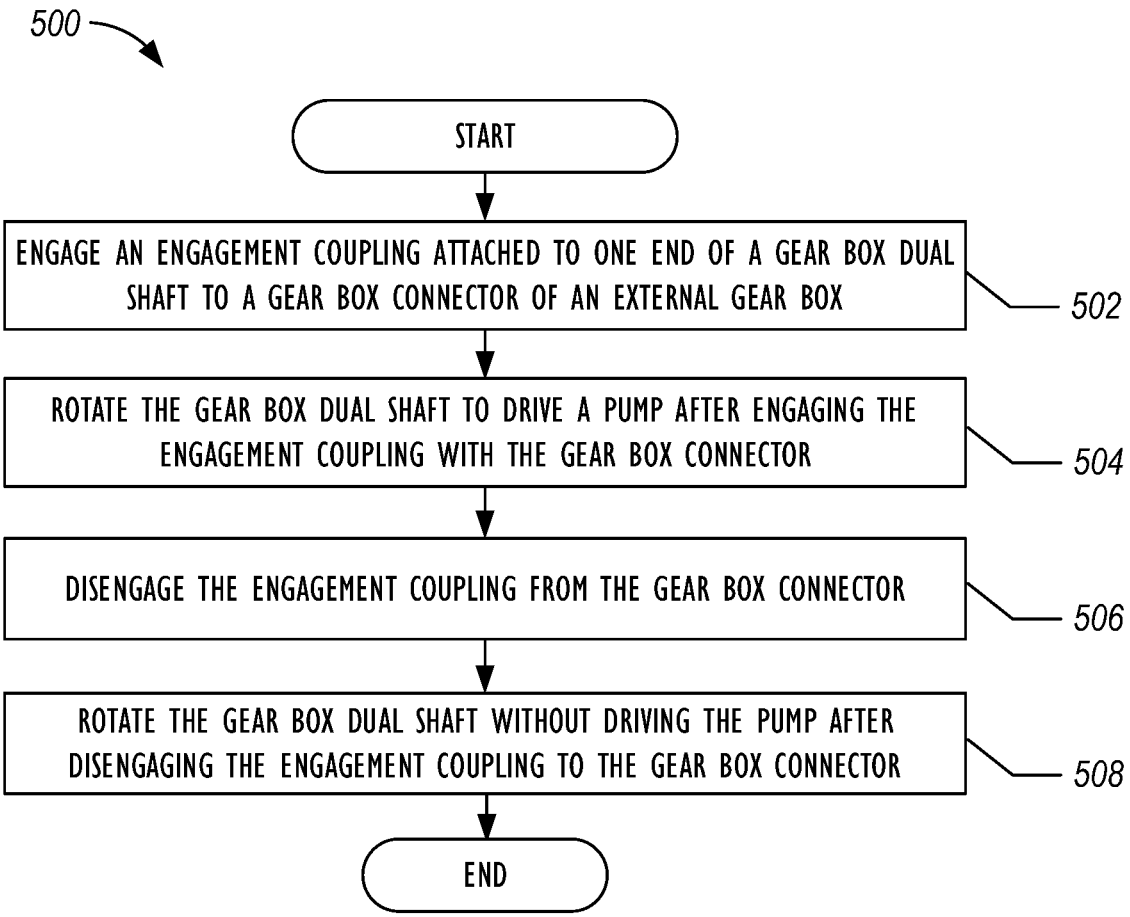
500
START
ENGAGE AN ENGAGEMENT COUPLING ATTACHED TO ONE END OF A GEAR BOX DUAL SHAFT TO A GEAR BOX CONNECTOR OF AN EXTERNAL GEAR BOX
502
ROTATE THE GEAR BOX DUAL SHAFT TO DRIVE A PUMP AFTER ENGAGING THE ENGAGEMENT COUPLING WITH THE GEAR BOX CONNECTOR
504
DISENGAGE THE ENGAGEMENT COUPLING FROM THE GEAR BOX CONNECTOR
506
ROTATE THE GEAR BOX DUAL SHAFT WITHOUT DRIVING THE PUMP AFTER DISENGAGING THE ENGAGEMENT COUPLING TO THE GEAR BOX CONNECTOR
508
END

FIG. 6

ENGAGEMENT AND DISENGAGEMENT WITH EXTERNAL GEAR BOX STYLE PUMPS

CROSS-REFERENCE TO RELATED APPLICATIONS

[0001] This application claims the benefit of U.S. Prov. Appl. Nos. 62/715,165 filed 6 Aug. 2018 and 62/786,174 filed 28 Dec. 2018, which are both incorporated herein by reference in their entireties.

BACKGROUND

[0002] Hydraulic fracturing has been commonly used by the oil and gas industry to stimulate production of hydrocarbon producing wells, such as oil and/or gas wells. Hydraulic fracturing, sometimes called "fracing" or "fracking" is the process of injecting fracturing fluid into a wellbore to fracture the subsurface geological formations and release hydrocarbons. The fracturing fluid is pumped into a wellbore at a pressure sufficient to cause fissures within the underground geological formations. Once inside the wellbore, the fracturing fluid fractures the underground formation. The fracturing fluid may include water, various chemical additives, and proppants that promote the extraction of the hydrocarbon reserves, such as oil and/or gas. Proppants, such as fracturing sand, prevent fissures and fractures in the underground formation from closing; thereby, allowing the formation to remain open so that hydrocarbons flow through the hydrocarbon wells.

[0003] Implementing fracturing operations at well sites requires extensive investment in equipment, labor, and fuel. A typical fracturing operation uses fracturing equipment, personnel to operate and maintain the fracturing equipment, large amounts of fuel to power the fracturing operations, and relatively large volumes of fracturing fluids. As such, planning for fracturing operations is complex and encompasses a variety of logistical challenges that include minimizing the on-site area or "footprint" of the fracturing operations, providing adequate power and/or fuel to continuously power the fracturing operations, increasing the efficiency of the hydraulic fracturing equipment, and reducing the environmental impact resulting from fracturing operations. Thus, numerous innovations and improvements of existing fracturing technology are needed to address the variety of complex and logistical challenges faced in today's fracturing operations.

SUMMARY

[0004] The following presents a simplified summary of the disclosed subject matter to provide a basic understanding of some aspects of the subject matter disclosed herein. This summary is not an exhaustive overview of the technology disclosed herein, and it is not intended to identify key or critical elements of the invention or to delineate the scope of the invention. Its sole purpose is to present concepts in a simplified form as a prelude to the more detailed description that is discussed later.

[0005] In one embodiment, a fracturing transport comprising: an external gear box for a pump, wherein the external gear box comprises a gear box dual shaft with a first end and a second end; a prime mover that includes a motor shaft, wherein one end of the motor shaft couples to the first end of the gear box shaft; an engagement coupling affixed to the second end of the gear box shaft; and an engagement panel that selectively engages or disengages the engagement coupling to the external gear box.

[0006] In another embodiment, a pump comprising: a fluid end assembly; a power end assembly that couples to the fluid end assembly; and an external gear box that couples to the power end assembly, wherein the external gear box comprises a gear box dual shaft with a first end and a second end, wherein the first end axially extends in a direction opposite to a second end.

[0007] In yet another embodiment, a method for selectively engaging and disengaging a pump from a motor. The method comprises engaging an engagement coupling attached to one end of a gear box dual shaft to a gear box connector of an external gear box, wherein the external gear box is part of a pump; rotating the gear box dual shaft to drive the pump after engaging the engagement coupling with the gear box connector; disengaging the engagement coupling from the gear box connector; and rotating the gear box dual shaft without driving the pump after disengaging the engagement coupling with the gear box connector.

[0008] In yet another embodiment, each of the above described embodiments and variations thereof, may be implemented as a method, apparatus, and/or system.

BRIEF DESCRIPTION OF THE DRAWINGS

[0009] For a more complete understanding of this disclosure, reference is now made to the following brief description, taken in connection with the accompanying drawings and detailed description, wherein like reference numerals represent like parts.

[0010] FIG. **1** is a schematic diagram of an embodiment of a medium voltage power distribution system for a fracturing fleet located at well site.

[0011] FIG. **2** is a schematic diagram of an embodiment of a fracturing pump transport that can engage and disengage one or more pumps from a prime mover.

[0012] FIGS. **3**A-**3**B illustrates top-down views of a portion of the fracturing pump transport in FIG. **2**.

[0013] FIGS. **4**A-**4**B illustrates cross-section views of a section of an external gear box during engagement according to the present disclosure.

[0014] FIG. **5** is a block diagram of a plate clutch coupling attached to a motor shaft end of the pump prime mover.

[0015] FIG. **6** is a flow chart of an embodiment of a method to engage and disengage an external gear box style pump from a prime mover for a fracturing pump transport.

[0016] While certain embodiments will be described in connection with the illustrative embodiments shown herein, the invention is not limited to those embodiments. On the contrary, all alternatives, modifications, and equivalents are included within the spirit and scope of the invention as defined by the claims. In the drawing figures, which are not to scale, the same reference numerals are used throughout the description and in the drawing figures for components and elements having the same structure, and primed reference numerals are used for components and elements having a similar function and construction to those components and elements having the same unprimed reference numerals.

SUMMARY OF THE DISCLOSURE

[0017] According to the present disclosure, a fracturing transport comprises: a prime mover, a first pump, a first gear

box, a first gear shaft, and a first coupling. The prime mover has a motor shaft and is operable to transmit drive to the motor shaft. The first pump is disposed adjacent the prime mover, and the first gear box (connected to the first pump) and the first gear shaft (disposed on the first gear box) are used to transmit the drive from the prime mover to the pump.

[0018] To do this, the first gear shaft is connected to the transmitted drive of the motor shaft. In general, the first coupling is disposed between the motor shaft and the gear shaft and is selectively coupleable between a coupled condition and an uncoupled condition. The first coupling in the coupled condition transfers the transmitted drive to the first gear box, while the first coupling in the uncoupled condition isolates the transmitted drive from the first gear box.

[0019] In one embodiment, the first coupling is disposed with the motor shaft and can be a plate clutch coupling. In other embodiments, the first coupling is disposed with the first gear shaft. Here, the first gear shaft may have a first end disposed toward the prime mover, and the first coupling can be a plate clutch coupling disposed with the first end. Alternatively, the first gear shaft may have first and second ends, with the first end disposed toward the prime mover and receiving the transmitted drive. The second end can extend beyond the other side the first gear box, and the first coupling can be disposed with this second end.

[0020] In these embodiments, rather than simply transfer the drive of the gear shaft to the gear box, the first coupling is selectively coupleable between a coupled condition and an uncoupled condition relative to the first gear box. The first coupling in the coupled condition transfers the transmitted drive of the first gear shaft to the first gear box, while the first coupling in the uncoupled condition isolates the transmitted drive of the first gear shaft from the first gear box.

[0021] The first gear box can be disposed externally on the first pump, as an external gear box. The first gear shaft can have first and second ends extending from opposite sides of the external first gear box. In this case, the first end can be disposed toward the prime mover and can be connected to the transmitted drive of the motor shaft, whereas the second end can have the first coupling.

[0022] Various mechanisms can be used for the first coupling, including a spline coupling, a clutch, an air clutch, an electro-magnetic clutch, a hydraulic clutch, or a plate clutch. In general, the first coupling can include a first coupling element, a second coupling element, and an actuator. The first coupling element is disposed on the first gear shaft and is rotated with the first gear shaft. The second coupling element is disposed on the first gear shaft and is rotatable relative to the first gear shaft. The second coupling element is connected by the external gear box to the first pump for transferring the transmitted drive thereto. For example, the second coupling can connect to a gear box gear in the gear box for reducing rotation from the prime mover to the pump. The actuator is engaged with the first coupling element and is actuatable to selectively couple the first coupling element between the coupled and uncoupled conditions relative to the second coupling element.

[0023] A bearing can be disposed between the actuator and the first coupling element to isolate rotation of the first coupling element from the first actuator. The first coupling element can include a spline hub being longitudinally movable along the first gear shaft relative to the second coupling element between the coupled and uncoupled conditions. For its part, the second coupling element can be a spline gear being mated with the spline hub in the coupled condition and being unmated with the spline hub in the uncoupled condition.

[0024] Various mechanisms for actuation can be used to operate the coupling between its operable conditions. For example, the actuator can include a hydraulic piston, a pneumatic piston, an electric motor, or an electric solenoid. A control system in communication with the first actuator can also be used to transmit actuation to the actuator to selectively couple the first coupling relative to the first gear box.

[0025] In general, the first pump can include: a power assembly coupled to the first gear box to receive the transferred drive; and a fluid assembly driven by the power assembly and configured to pressurize fluid. Moreover, the prime mover can include an electric motor or a hydrocarbon fuel-based motor.

[0026] The fracturing transport can include a second arrangement of pump, gear box, and coupling connected on the opposite side of the prime mover to be operated in a comparable manner. In this way, one, both, or none of the pumps can be coupled to the prime mover at a given time during operations by actuation of the respective couplings.

[0027] According to the present disclosure, a pump is powered by transmitted drive of a prime mover to pump fluid. The pump comprises: a fluid assembly configured to pressurize the fluid; and a power assembly coupled to the fluid assembly and transferring the transmitted drive to the fluid assembly. A gear box of the pump is coupled externally to the power end assembly and transfers the transmitted drive to the power end assembly. A gear shaft disposed on the gear box is coupled to the prime mover and receives the transmitted drive therefrom.

[0028] Finally, an engagement coupling is disposed with the gear shaft and is selectively coupleable between a coupled condition and an uncoupled condition relative to the gear box. The engagement coupling in the coupled condition transfers the transmitted drive of the gear shaft to the gear box, whereas the engagement coupling in the uncoupled condition isolates the transmitted drive of the gear shaft from the gear box.

[0029] Similar configurations described above can be used for the engagement coupling of the disclosed pump. For example, the engagement coupling can include an actuator engaged with the engagement coupling and configured to selectively couple the engagement coupling between the coupled and uncoupled conditions relative to the gear box. Additionally, the engagement coupling can include: a spline hub rotatable relative to the gear shaft and coupled to the gear box; and a spline coupling rotating with the gear shaft and selectively mating with the spline gear.

[0030] The gear shaft can have a first end disposed toward the prime mover, and the engagement coupling can be disposed with the first end of the gear shaft. Alternatively, the gear shaft can have first and second ends extending from opposite sides of the gear box. The first end is disposed toward the prime mover and is connected to the transmitted drive of the motor shaft. However, the second end can have the engagement coupling.

[0031] A method is also disclosed herein for pumping fracture fluid with a pump. The pump has a fluid end assembly powered by a power end assembly driven by a prime mover. The method comprises: rotating a gear box shaft of a gear box coupled to the power end assembly by

receiving drive from the prime mover at a first end of the gear box shaft; and selectively transferring the received drive from the gear box shaft to the gear box. To selectively transfer the drive, the method comprises: engaging an engagement coupling, disposed on a second end of the gear box shaft, with the gear box and transmitting the rotation of the gear box shaft to the gear box, and disengaging the engagement coupling from the gear box and rotating the gear box shaft without transmission of the rotation to the gear box. Engaging and disengaging the engagement coupling from the gear box connector can include utilizing hydraulic power to move the engagement coupling.

[0032] The foregoing summary is not intended to summarize each potential embodiment or every aspect of the present disclosure.

DETAILED DESCRIPTION

[0033] FIG. **1** is a schematic diagram of a fracturing fleet **14** located at a well site **10** having one or more wellheads **112**. In this example, the fracturing fleet **14** includes one or more power sources **20**, a switch gear transport **30**, a blender-hydration transport **40**, and one or more fracturing pump transports **50**. As will be appreciated, other arrangements are possible.

[0034] The switch gear transport **30** has one or more transformers **32** and one or more circuit breakers **34** in electrical communication with the one or more power sources **20** of electricity, such as a mobile source **22** and an auxiliary source **24**. In turn, the switch gear transport **30** is in electrical communication with one or more power consumers, such as a hydration-blender transport **40** and one or more fracturing pump transports **50**.

[0035] Briefly, the switch gear transport **20** may include a black start generator **36** that provides electric power to initiate and start at least one of the one or more power sources **20** of electricity. For example, the power source **20** of electricity can include one or more turbine-electric generator transports **22** that compress and mix combustion air with hydrocarbon fuel to spin and generate mechanical energy and then converts the mechanical energy to electricity. The power source **20** of electricity can also include an inlet and exhaust transport that provides ventilation and combustion air to the turbine-electric generator transport when generating electricity. Configuring and utilizing a turbine-electric generator transport and an inlet and exhaust transport are discussed and shown in more detail in U.S. Pat. No. 9,534,473, filed Dec. 16, 2015 by Jeffrey G. Morris et al. and entitled "Mobile Electric Power Generation for Hydration Fracturing of Subsurface Geological Formations," which is hereby incorporated by reference as if reproduced in its entirety. In other embodiments, the power source **20** of electricity could include other transport configurations to employ a centralized source of electricity that powers fracturing equipment.

[0036] Once the at least one power source **20** of electricity is operational, the switch gear transport **20** receives electric power from the power sources **20** of electricity at a designated input voltage level and outputs the electric power to the power consumers or transports **40**, **50**. When the transports **40**, **50** receive the electric power at the target output voltage level, each of the transports **40**, **50** can include one or more transformers **42**, **52**, and **54** that step down the target output voltage level (e.g., 13.8 kV) to one or more lower voltage levels that equipment (e.g., electric prime movers) mounted on the transports **40**, **50** may utilize.

[0037] For example, the hydration-blender transport **40** receive the electric power to power a plurality of electric blenders. A plurality of prime movers may drive one or more pumps that pump source fluid and blender additives (e.g., sand) from a sand conveyor **44** into a blending tub, mix the source fluid and blender additives together to form fracturing fluid, and discharge the fracturing fluid to the fracturing pump transports **50**. In one embodiment, the electric blender may be a dual configuration blender that comprises electric motors for the rotating machinery that are located on a single transport.

[0038] For its part, the fracturing pump transport **50** receives the electric power to power a prime mover (not shown). The prime mover converts electric power to mechanical power for driving one or more pumps (not shown). The pumps on the fracturing pump transports **50** pump the fracturing fluid to a hydraulic fracturing manifold at the wellhead **12**. The pressurized fracturing fluid can be delivered using piping and manifolds to the wellhead **12** in any suitable arrangement known in the art.

[0039] In one embodiment, the prime mover on the fracturing pump transport **50** may be a dual shaft electric motor that drives two different pumps. The fracturing pump transport **50** may be arranged such that one pump is coupled to opposite ends of the dual shaft electric motor and avoids coupling the pumps in series. By avoiding coupling the pump in series, the fracturing pump transport **50** may continue to operate when either one of the pumps fails or have been removed from the fracturing pump transport **50** for repair or replacement. Additionally, repairs to the pumps may be performed without disconnecting the system manifolds that connect the fracturing pump transport **50** to other fracturing equipment within the mobile fracturing system **14** and wellhead **12**.

[0040] A data van **70** may be part of a control network system, where the data van **70** acts as a control center configured to monitor and provide operating instructions in order remotely operate the mobile source of electricity **32**, the blender transport **40**, the fracturing pump transport **50**, and/or other fracturing equipment within the mobile fracturing system **14**. For example, the data van **70** may communicate via the control network system with the VFDs located within the transports (e.g., **50**) that operate and monitor the health of the electric motors used to drive the pumps on the fracturing pump transports **50**. In one embodiment, the data van **70** may communicate with the variety of fracturing equipment using a control network system that has a ring topology. A ring topology may reduce the amount of control cabling used for fracturing operations and increase the capacity and speed of data transfers and communication.

[0041] Other fracturing equipment, such as gas conditioning transport, water tanks, chemical storage of chemical additives, hydration unit, sand conveyor, and sandbox storage, may not be shown in FIG. **1**, but would be known by persons of ordinary skill in the art. Therefore, the other equipment is not discussed in further detail.

[0042] Moreover, although FIG. **1** illustrates an example of fracturing fleet **14** that utilizes electric power for operations, the disclosure is not limited to this particular example. For instance, the fracturing pump transports **50** of the present disclosure may not be powered by electric power

and may instead use a prime mover powered by a combustion engine or the like to operate the pumps on the transports **50**. Further still, the switch gear transport **30** can receive electric power from other types of power sources, such as a power grid or a stationary power source. The fracturing fleet **14** may utilize a separate hydration transport and blender transport instead of a combined hydration-blender transport **40**.

[0043] Turning now to details of how a prime mover connects to pumps, FIG. **2** is a schematic diagram of an embodiment of a fracturing pump transport **100**. According to the present disclosure, various example embodiments are disclosed herein for the fracturing pump transport **100** that can engage and disengage a prime mover **110** from an external gear box style pump **120***a-b* on the transport **100**. In one embodiment, the external gear box style pump **120***a-b* is a well services pump that generates high-pressure fracturing fluid. For example, the external gear box style pump **120***a-b* may be a plunger style pump that operates within a desired mechanical power range, such as about 1,500 horsepower (HP) to about 5,000 HP, to discharge fracturing fluid at relatively high pressures (e.g., about 10,000 pounds per square inch (PSI)).

[0044] As discussed in more detail below, the external gear box style pump **120***a-b* includes an external gear box **126** mounted on or attached to the pump **120***a-b*. The external gear box **120** houses one or more gears for transferring (e.g., reducing) the rotation from of the prime mover **110** to the associated pump **120***a-b*. For example, the external gear box **126** connects to a power end assembly **124** of the pump **120***a-b*, which has one or more pinion gears that engage one or more bull gears. In turn, the power end assembly **124** generates torque to drive a fluid end assembly (e.g., plungers) of the external gear box style pump **120***a-b* to pressurize the fracturing fluid for a hydraulic fracture operation.

[0045] The external gear box **126** also includes a gear box dual shaft **128** that protrudes on opposite sides of the external gear box **126**. One end of the gear box dual shaft **128** connects to a drive shaft driven by a motor shaft **118** of the prime mover **110**. The other end of the gear box dual shaft **128** connects to a coupling **200** that can engage and disengage the pump **120***a-b* from the prime mover **110**. For example and as discussed below, one element (e.g., spline coupling) of the coupling **200** can be moved back and forth on the gear box dual shaft **128** to engage or disengage another element (e.g., a spline hub) of the coupling **200**. The spline hub is connected to or part of an internal gear in the external gear box **126** that generates torque to rotate the pinion gears and/or bull gears of the pump **120***a-b*.

[0046] Specifically, FIG. **2** illustrates an elevational view of the fracturing pump transport **100**, which includes an engagement panel **102** that adjusts the engagement couplings **200** to engage and disengage either one or both of the pumps **120***a-b* from prime mover **110**. As an example, the engagement panel **102** includes levers or switches that an operator manually operates to engage or disengage the gear box shafts **128***a-b* to the pumps **120***a-b*, respectively. Additionally or alternatively, to engage and disengage the pumps **120***a-b* from the gear box shafts **128***a-b*, the engagement panel **102** may include electronic controllers that generate controls and/or receive instructions from remote locations, such as a monitoring station that is part of a power and control system **104**, another location at the well site (e.g., data van), and/or off-site. For example, if both pumps **120***a-b* are initially in an engaged position, in response to receiving a remote command or to generating a local control, the engagement panel **102** may trigger the disengagement of a first pump **120***a* while a second pump **120***b* remains in the engaged position. As will be appreciated with the benefit of the present disclosure, disengagement may be performed for any number of reasons during operations.

[0047] FIG. **2** also illustrates that the fracturing pump transport **100** utilizes a lay-down trailer **102** to enhance mobility, improved safety, and enhance ergonomics for crew members when performing routine maintenance and operations of the pumps **120***a-b*. The lay-down trailer **120** positions the pumps **120***a-b* lower to the ground as the main trailer beams are resting on the ground in operational mode. With the lay-down trailer design, the fracturing pump transport **100** has an upper section above the trailer axles that may hold or have mounted the power and control systems **104**.

[0048] The power and control system **104** may include one or more electric drives **105***a* (e.g., variable frequency drives (VFD)), transformers **105***b*, controls **105***c* (e.g., a programmable logic controller (PLC) located on the fracturing pump transport **100**), and cable connections (not shown) to other transports (e.g., switch gear transport). The electric drives **105***a* may provide control, monitoring, and reliability functionality, such as preventing damage to a grounded or shorted prime mover **110** and/or preventing overheating of components (e.g., semiconductor chips) within the electric drives. The transformers **105***b* within the power and control systems **104** can step one or more input voltages (e.g., 13.8 kilovolts (kV)) to one or more lower voltages (e.g., 4.2 kV, 2.1 kV, 600 and 480 volts (V)).

[0049] In one embodiment, the prime mover **110** may be a dual shaft electric motor that has a motor shaft **118** that protrudes on opposite sides of the electric motor. The dual shaft electric motor **110** may be any desired type of alternating current (AC) or direct current (DC) motor. For example, the dual shaft electric motor **110** may be an induction motor, and in another example the dual shaft electric motor **110** may be a permanent magnet motor.

[0050] Other embodiments of the prime mover **110** may include other electric motors that are configured to provide about 5,000 HP or more. For example, the dual shaft electric motor **110** may deliver motor power in a range from about 1,500 HP to about 10,000 HP. Specific to some embodiments, the dual shaft electric motor **110** may be about a 5,000 HP rated electric motor, about a 7,000 HP rate electric motor, or about a 10,000 HP electric motor. The prime mover **110** may be driven by at least one variable frequency drive **105***a* that is rated to a maximum of about 5,000 HP and may receive electric power generated from the mobile source of electric power.

[0051] The fracturing pump transport **100** may reduce the footprint of fracturing equipment on a well-site by placing the two pumps **120***a-b* on the same transport **100**. Moreover, larger pumps **120***a-b* may be coupled to the prime mover **110** that operate with greater horsepower to produce additional equipment footprint reductions. In one embodiment, each of the pumps **120***a-b* may be a quintiplex pump located on the same transport **100**. Other embodiments may include other types of plunger style pumps **120***a-b*, such as triplex pumps. The pumps **120***a-b* may each operate from a range of about 1,500 HP to about 5,000 HP. Specifically, in one or more embodiments, each of the pumps **114***a-b* may operate at HP

ratings of about 1,500 HP, 1,750 HP, 2,000 HP, 2,250 HP, 2,500 HP, 2,600 HP, 2,700 HP, 3,000 HP, 3,500 HP, 4,000 HP, 4,500 HP, and/or 5,000 HP.

[0052] The prime mover **110** and each of the pumps **120***a-b* may be mounted on sub-assemblies **106** for isolating and allowing for individual removal from the fracturing pump transport **100**. In other words, the prime mover **110** and each of the pumps **120***a-b* can be removed from service and replaced without shutting down or compromising other portions of the fracturing system. If the prime mover **110** needs to be replaced or removed for repair, the prime mover sub-assembly **106** may be detached from the fracturing pump transport **100** without removing the two pumps **120***a-b* from the fracturing pump transport **100**. For example, the first pump **120***a* can be isolated from the fracturing pump transport **100**, removed and replaced by a new pump **120***a*. If the prime mover **110** and/or the pumps **120***a-b* require service, an operator can isolate the different components from the fluid lines, and unplug, un-pin, and remove the prime mover **110** and/or the pumps **120***a-b* from the fracturing pump transport. Furthermore, each pump sub-assembly **106** may be detached and removed from the fracturing pump transport **100** without removal of the other pump **120***a-b* and/or the prime mover **110**.

[0053] In the arrangement of FIG. **2**, the pumps **120***a-b* are well service pumps (e.g., plunger-style pumps) that each include an external gear box **126** that houses one or more gears. The external gear boxes **126** are in a separate and/or distinct enclosure than the power end assemblies **124**. In prior well service pumps, such as plunger-style pumps, transfer gears to step rotation/torque from the motor **110** to the pinion gears and bull gears would be part of (or embedded within) the power end assemblies **104**. In other words, prior well service pumps would house gear box gears within the power end assemblies **104**. However, to improve pump performance and/or efficiency, the gear box gears are separated out from the power end assemblies **104** and moved to the external gear boxes **126**. The additional space potentially occupied by the external gear boxes **126** can reduce the available distance between the prime mover **110** and pumps **120***a-b*, especially when a reduced footprint for the transport **100** is desired along with the increased horsepower sought for the transport **100**. In the end, the external gear boxes **126** may cause space issues that prevent and/or complicate the utilization of certain connections to engage the pumps **120***a-b* with (and disengage from) the prime mover **110**.

[0054] To engage and disengage within a limited space, an engagement coupling **200** of the present disclosure is incorporated into the external gear box **126** on the pumps **120***a-b*. In one embodiment and as discussed in more detail below, the engagement coupling **220** may be a spline coupling that engages and disengages with a spline hub affixed to the external gear box **126** by mating and unmating matching splines, teeth, slots, and the like. The spline hub can be connected to or be part of a gear box gear within the external gear box **126** that generates torque to rotate the pinion gears and/or bull gears. The spline coupling is attached to one end of a gear box dual shaft **118**, and the other end of the gear box dual shaft **118** connects to a drive shaft driven by the motor shaft **118** of the prime mover **110**. To engage the pumps **120***a-b* with (or disengage from) the torque (e.g., rotation, drive, etc.) of the prime mover **110**, the spline coupling may move back and forth to engage or disengage the spline hub.

[0055] Other embodiments of the engagement couplings **200** to engage and disengage the drive between the prime mover **110** and the pumps **120***a-b* can include air clutches, electro-magnetic clutches, hydraulic clutches, plate clutches, and/or other clutches and disconnects. The engagement couplings **200** can have manual and/or remote operated disconnect devices. Engaging and disengaging the drive between the pumps **120***a-b* and the prime mover **110** with the spline hub and spline coupling is discussed in more detail below.

[0056] In one or more embodiments, the engagement panel **102** and/or the power and control system **112** are loaded with software such that remote equipment (e.g., data van **70**; FIG. **1**) can interface and provide instructions to implement pump indexing operations. Indexing of the pumps **120***a-b* prevents the two pumps **120***a-b* from fighting each other's resonance during pumping operations. The pump indexing operation can utilize the fracturing pump transport's **100** ability to remotely engage and disengage the pumps **120***a-b* to remotely perform the pump indexing operations. Being able to remotely perform pump indexing operations prevents operators from sending personnel into hazardous working conditions or interrupting fracturing operations. For example, manually performing pump indexing operations while other fracturing pump transports **100** are pressurized and operational. Alternatively, to reduce risks, an operator may cease fracturing operations for all fracturing equipment to allow personnel to manually perform pump indexing operations.

[0057] The engagement panel **102** and/or the power and control system **112** are loaded with software such that remote equipment (e.g., the data van **70**; FIG. **1**) can interface and provide instructions for pump indexing operations. As an example, the engagement panel **102** and/or the power and control system **112** can initially receive instructions to engage a first of the pumps **120***a* to prime mover **110** and disengage a second of the pumps **120***b* from the prime mover **110**. After engaging the first pump **120***a* to the prime mover **110**, the motor shaft **118** is rotated until the first pump's **120***a* top dead center indicator indicates that the first pump **120***a* is clocked at a reference point of zero degrees. For example, when the first pump **120***a* is set to the top dead center, which can also be referred to being clocked at a reference point of zero degrees, the position of the first plunger and/or piston within the first pump **120***a* is at the farthest position from pump's **120***a* crankshaft. In other words, when the first pump **120***a* aligns with the top dead center indicator, the number one plunger and/or piston of the first pump **120***a* is at its highest point on a compression stroke.

[0058] Afterwards, the engagement panel **102** and/or the power and control system **112** receives instructions to disengage the first pump **120***a* from the prime mover **110** and to engage the second pump **120***b* to the prime mover **110**. When the second pump **120***b* is engaged to the prime mover **110**, the motor shaft **118** is rotated until the second pump's **120***b* top dead center indicator indicates that the second pump **120***b* is clocked at a reference point of zero degrees. Once the second pump **120***b* is clocked at the reference point zero degrees, the motor shaft is rotated 180 degrees out of phase to put the second pump **120***b* at 180 degrees from the reference point zero degrees, which can also be referred to as bottom dead center. When the second pump **120***b* is at 180 degrees from reference point zero degrees, the number one

plunger and/or piston of the second pump **120***b* is at its lowest point on a compression stroke, which is the nearest position from second pump's **120***b* crankshaft. Subsequently, the first and second pumps **120***a-b* are set to both engage the motor shaft **118** of the prime mover **110**. At this point, the two pumps **120***a-b* are now referenced 180 degrees out of phase from one another and are ready to pump fracturing fluid.

[0059] Although FIG. **2** illustrates a specific embodiment of a fracturing pump transport **100** that can engage and disengage one or more pumps **120***a-b* from a prime mover **110**, the disclosure is not limited to this particular embodiment. For example, even though FIG. **2** illustrates that the prime mover **110** is a dual shaft prime mover, other embodiments of the fracturing pump transport **100** may use other types of prime movers that have a shaft with a single end that extends outside of the prime mover. Additionally, the prime mover **110** may not be an electric motor, and instead the prime mover **110** can be a hydrocarbon fuel-based motor (e.g., diesel engine) that drives the pumps **120***a-b*. As will be appreciated, FIG. **2** does not depict other components (e.g., plumbing, manifolds, and power connections) that persons of ordinary skill in the art may utilize to produce a fracturing pump transport **100**. The use and discussion of FIG. **2** is only an example to facilitate ease of description and explanation.

[0060] With an understanding of a fracturing pump transport **100** according to the present disclosure, discussion now turns to details of an engagement coupling **200** for use between a prime mover **110** and a pump **120**. FIGS. **3**A-**3**B illustrate top-down views of one end of the fracturing pump transport **100** of FIG. **2**. As shown in FIGS. **3**A-**3**B, one end of a motor shaft **118** on the prime mover **110** connects to a pump **120***b*, which is simply the second of the two pumps in this example. As will be appreciated, an opposite end of the motor shaft **118** on the prime mover **110** can connect to the first pump (**120***a*) in a similar manner.

[0061] The end of the motor shaft **118** connects to a drive shaft **112** at a hub **114**. (Within this disclosure, the drive shaft **112** can also be referred to as a torque tube.) The drive shaft **112** extends from the hub **114** to connect to a side of the external gear box **126** facing the prime mover **110**. Specifically, the drive shaft **112** connects to one end of a gear box dual shaft **118** at another hub **116**. Although not explicitly shown in FIG. **3**A, the drive shaft **112**, the motor shaft **118**, and the gear box dual shaft **118** may be connected together using one or more couplings, such as a fixed coupling (e.g., flex coupling or universal joint-based coupling).

[0062] The external gear box **126** connects to the power assembly end **124** of the pump **120***b*, which connects to the fluid end assembly **122** of the pump **120***b*. To control the transfer of rotation, torque, drive, etc. from the prime mover's motor shaft **118** to the gear box **126** and further to the power assembly **124**, an engagement coupling **200** (e.g., a spline coupling, clutch, or other mechanism as disclosed herein) according to the present disclosure is disposed at the other end of the gear box dual shaft **128**. As shown, the end of the gear box dual shaft **128** with the engagement coupling **200** is located in a space or gap between the external gear box **126** and the power end assembly **124**, which can allow for tighter spacing between the prime mover **110** and the pump **120***b* with its external gear box **126**.

[0063] In FIG. **3**A, the engagement coupling **200** is in a disengagement position or an uncoupled condition. By contrast, the engagement coupling **200** is in an engagement position or a coupled condition in FIG. **3**B. As an example, the engagement coupling **200** can use a spline coupling **210** that engages and disengages a gear box connector **220**, such as a spline hub. When in the disengagement position of FIG. **3**A, the spline coupling **210** does not engage or connect to the spline hub **220**.

[0064] For its part, the gear box connector **220** (e.g., spline hub) attaches to a gear **130** (e.g., spline gear) of the external gear box **126**. As will be appreciated, the external gear box **126** can include various gears in spur gear designs, planetary gear designs, or the like that perform a gear reduction to drive the pinion gears and/or bull gears of the pump's power assembly **124**. Even though the gear box dual shaft **128** traverses through the external gear box **126**, the gear box dual shaft **128** does not internally connect to or engage the gear box gear **130** (e.g., spline gear). During a disengagement operation, rotating the drive shaft **112** causes both the gear box dual shaft **128** and the first coupling element **210** to rotate. Even though the gear box dual shaft **128** is rotating, the second coupling element **220** and the gear box gear **130** do not rotate and remain stationary.

[0065] In contrast, FIG. **3**B illustrates the engagement coupling **200** is in an engagement position or a coupled condition. To engage the pump **120***b* to the prime mover **110** so the drive of the prime mover **110** is transferred to the pump **120***b*, the engagement coupling **200**, which is located between the external gear box **126** and the power end assembly **124**, includes an actuator **230** to engage the first coupling element **210** of the engagement coupling **200** with the second coupling element **220** (i.e., the gear box connector **220**) connected to the gear box gear **130**. In general, the actuator **230** can include a hydraulic piston, a pneumatic piston, an electric motor, an electric solenoid, or other actuator for moving, sliding, pushing, pulling, etc. the first coupling element **210** on the gear shaft **128** relative to the second coupling element **220**.

[0066] In one embodiment, for example, hydraulic fluid and/or mechanical power is supplied by the control panel **102** to the actuator **230**. The supplied power controls the actuator **230** to adjust the engagement coupling **200** (e.g., spline coupling **210**) to engage and disengage the gear box gear **130** with the rotation of the gear box dual shaft **128**. As an example, a hydraulic piston or other mechanical apparatus for the actuator **230** may engage a bearing **232** that moves the first coupling element **210** of the engagement coupling **200** in a first direction toward the dual-shaft, external gear box **126** or in an opposite direction towards the power end assembly **124**. In other embodiments, the actuator **230** may use electro-magnetic forces to move the first coupling element **210** on the gear box dual shaft **128**.

[0067] When engaged, the second coupling element **220** transfers the rotational movement of the first coupling element **210** and gear box dual shaft **128** to the gear box gear **130**. As schematically depicted in FIG. **3**B, rotating the gear **130** then initiates the rotation of a pinion shaft **132** having pinion gears **134** within the external gear box **126**. Recall that the pinion gears **134** within the external gear box **126** interface with one or more bull gears **136**. Rotating the pinion gears **134** causes the bull gears **136** to rotate, which in turn eventual causes the rotation of a crankshaft **138** within the power assembly end **124** of pump **120***b*. To pump and pressurize fracturing fluid, the rotation of the crankshaft **138** then produces torque that moves plungers **140** in the

fluid end assembly **122**. Other transmission arrangements can be used in the power end assembly **124** for a given pump.

[0068] Engaging and disengaging the pumps **120***a-b* from the prime mover **110** shown in FIGS. **3**A-**3**B can utilize other components not explicitly shown. Additionally, engagement and disengagement connection can utilize one or more proximity sensors **240** to detect when the engagement coupling **200** moves to an engagement or disengagement position (coupled or uncoupled condition), and the sensing from the sensors **240** can be relayed to the control system (**104**) of the transport (**100**) to verify activation/deactivation. Any suitable type of sensor **240** can be used, such as a proximity sensor, a contact, an encoder, etc.

[0069] As will be appreciated with the benefit of the present disclosure, connecting the external gear box **126** to the prime mover **110** may vary in the number of fixed couplings and intermediate drive shafts based on space availability, misalignment tolerances, and whether vibrations from the pumps **120***a-b* need to be deflected to avoid affecting the operation of the prime mover **110**. Having fixed couplings and intermediate drive shafts **112** may allow the gear box dual shaft **128** to move or walk slightly without damaging the motor shaft **118** and/or bearings of the prime mover **110**. Examples of fixed couplings may include flex couplings and/or universal joint-based coupling. The use and discussion of the arrangement in FIGS. **3**A-**3**B are only examples to facilitate ease of description and explanation.

[0070] Having an understanding of an engagement coupling **200** for use between a prime mover **110** and a pump **120**, discussion now turns to a particular arrangement of components of an engagement coupling **200**. FIGS. **4**A-**4**B illustrate cross-section views of a section of an external gear box **126**. The engagement coupling **200** includes the first and second coupling elements **210** and **220**. The first element **210** can be a spline coupling having splines **212**, and the second element **220** can be a spline hub **220** having corresponding splines **222**. In FIG. **4**A, the spline coupling **210** engages the spline hub **220** when in an engagement position (coupled condition). By contrast, the spline coupling **210** in FIG. **4**B disengages the spline hub **220** when in a disengagement position (uncoupled condition). Rather than using splines **212**, **222**, teeth, slots, detents or the like, strong magnetic coupling can be used for the engagement in which case either one or both of the elements **210**, **220** can include magnetic elements **212**, **222**. Further still, the first and second coupling elements **210**, **220** may be opposing clutch components that mate and unmate relative to one another. These and other possibilities disclosed herein can be used.

[0071] As discussed previously, when manual and/or remote instructions are sent to move the spline coupling **210** to engage the spline hub **220** using an actuator (not shown), the spline coupling **210** translates the rotational movement from the gear box dual shaft **128** and the spline coupling **210** to the gear **130**. In the disengaged position (FIG. **4**B), the spline coupling **210** disengages the spline hub **220**, which is attached to or part of gear **130**. By disengaging, the rotational movement is not translated to the spline hub **220** and gear **130** even though the gear box dual shaft **128** and the spline coupling **210** continue to rotate. One or more rotational bearings **131** can be used between the gear **130** and the shaft **128**, which passes centrally through it.

[0072] FIGS. **4**A-**4**B also depict that a bearing **232** can be supported by the spline coupling **210** such that bearing **232** does not move even when the spline coupling **210** rotates. In one embodiment, the bearing **232** on the spline **210** may support the coupling of one or more hydraulic piston **231** of an actuator **230** and/or proximity sensors (**240**) positioned adjacent to the spline coupling **210**. For example, a bracket **234** that mounts to the bearing **232** may support a hydraulic piston **231** of the actuator **230** that are positioned adjacent the spline coupling **210**. The hydraulic piston **231** of the actuator **230** move the spline coupling **210** a designated direction (e.g., in the direction of the prime mover **110**) to engage the spline coupling **210** with the spline hub **220**. When the hydraulic pistons **231** of the actuator **230** move the spline coupling **210** in an opposite direction (e.g., in the direction of the power end assembly **104**), the spline-tooth coupling may disengage spline coupling **210** with the spline hub **220**.

[0073] In one or more embodiments of the present disclosure to engage and disengage within a limited space, an engagement coupling **200** of the present disclosure is situated between the drive of the motor shaft **118** and the gear shaft **128**. In previous embodiments, the coupling **200** is situated/disposed with the gear shaft **128**, and is especially disposed with an end of the gear shaft **128** on an opposing side of the external gear box from the prime mover **110**. In alternative embodiments, the coupling **200** of the present disclosed can be situated/disposed with a motor shaft end for the prime mover **110**. The engagement coupling **200** can be a plate clutch coupling that engages and disengages with a drive shaft **112** that connects to a pump shaft (e.g., pinion shaft or external gear box shaft **128**). The plate clutch coupling **200** can be connected to or be part of the motor shaft **118** that generates torque that rotates the drive shaft **112**. To connect or disconnect the pumps **120***b* from the prime mover **110**, the plate clutch coupling **200** may move back and forth to engage or disengage the drive shaft **112**. The plate clutch coupling **200** may include multiple friction plates to increase the friction used to engage the end of the motor shaft **118** to the drive shaft **112**. Other embodiments of the engagement couplings **200** that may be used to engage and disengage the pump prime mover **110** with the pumps **120***b* include air clutches, electro-magnetic clutches, hydraulic clutches, and/or other clutches and disconnects that have manual and/or remote operated disconnect devices.

[0074] In particular, FIG. **5** illustrates a top-down view of one end of the components on a fracturing pump transport. A prime mover **110** is shown with one of the pumps (e.g., **120***b*). An external gear box **126** connects to a power assembly end **124** of the pump **120***b*, which connects to the fluid end assembly **122** of the pump **120***b*.

[0075] One end of the motor shaft **118** of the prime mover **110** connects to an engagement coupling **200** according to the present disclosure. In the present example, the engagement coupling **200** is a plate clutch coupling **300**. The plate clutch coupling **300** connects to a drive shaft **112** at hub **114**. Within this disclosure, the drive shaft **112** can also be referred to as a torque tube. The drive shaft **112** extends from hub **114** to connect to a side of the gear box shaft **128** facing the prime mover **110**. Specifically, the drive shaft **112** connects to one end of the gear box shaft **128** at hub **116**. Although not explicitly shown in FIG. **5**, the drive shaft **112**, the motor shaft end **118**, and the gear box shaft **128** may be

connected using one or more couplings, such as a fixed coupling (e.g., flex coupling or universal joint-based coupling).

[0076] To engage and disengage within the limited space, the plate clutch coupling **300** engages and disengages with the drive shaft **112** that connects to the gear box shaft **128** (e.g., pump shaft). The plate clutch coupling **300** can be connected to or be part of the motor shaft end that generates torque to rotate the drive shaft **112**.

[0077] To connect or disconnect pump **120***b* from the prime mover **110**, the plate clutch coupling **300** may move back and forth to engage or disengage the drive shaft **112**. (As will be appreciated, an actuator (not show), such as a hydraulic piston or other actuator disclosed herein, can move elements of the plate clutch coupling **300** during the activation. The plate clutch coupling **300** may include multiple friction plates (e.g., three friction plates) to increase the friction used to engage the end of the motor shaft **118** to the drive shaft **112**. The plate clutch coupling **300** allows the end of the motor shaft **118** to disengage and/or engage the drive shaft **112** while the motor shaft end is rotating. In other words, the prime mover **110** does not need to be powered down and/or the motor shaft **118** does not need to stop rotating prior to engaging and/or disengaging the drive shaft **112**.

[0078] Here, the plate clutch coupling **300** is affixed to (or disposed on) the end of the motor shaft **118**. In another arrangement, the plate clutch coupling **300** can be affixed to (or disposed on) the end of the gear shaft **128**. Operation of the plate clutch coupling **300** disposed with the gear shaft **128** can be comparable to that discussed above and may also include an actuator (not shown) as disclosed herein. Moreover, as already noted in previous embodiments, an engagement coupling **200**, such as the plate clutch coupling **300** discussed here, can be disposed with an opposite end of the gear shaft **128** extending on the other side of the external gear box **126** away from the prime mover **110**.

[0079] FIG. **6** is a flow chart of an embodiment of a method **600** to engage and disengage an external gear box style pump from a prime mover for a fracturing pump transport. Method **600** may correspond to engaging and disengaging the engagement coupling **200** and gear box connector **130** shown in FIGS. **3**A-**3**B. Additionally, the method **600** may also be implemented for engaging and disengaging the spline coupling **210** and spline hub **220** shown in FIGS. **4**A-**4**B. The use and discussion of FIG. **6** is only an example to facilitate explanation and is not intended to limit the disclosure to this specific example.

[0080] Method **600** may start at block **602** by engaging an engagement coupling attached to one end of a gear box dual shaft to a gear box connector of an external gear box. To implement block **602**, method **600** may utilize hydraulic or mechanical means to move the engagement coupling to an engagement position. In other implementations, method **600** may utilize electro-magnetic means to move the engagement coupling to the engagement position. Method **600** may then move to block **604** and rotate the gear box dual shaft to drive a pump after engaging the engagement coupling to the gear box connector. Using FIGS. **4**A-**4**B as an example, engaging the spline coupling **210** with the spline hub **220**, the rotational movement of the gear box dual shaft **128** transfers to the gear **130**. Rotating the gear **130** drives the power end assembly **124** and the fluid end assembly **122** of the pump **120**.

[0081] Method **600** continues to block **606** and disengages the engagement coupling from the gear box connector. In implementations where the engagement coupling is a spline coupling, then method **600** may perform a disengagement operation by moving the spline coupling away from the spline hub. Afterwards, method **600** moves to block **608** rotates the gear box dual shaft without driving the pump after disengaging the engagement coupling to the gear box connector. Using FIGS. **4**A-**4**B, the gear box dual shaft **128** continues to rotate; however, since the gear box dual shaft does not internally couple or engage gear **130**, the gear **130** does not rotate.

[0082] As used herein, the term "transport" refers to any transportation assembly, including, but not limited to, a trailer, truck, skid, rail car, and/or barge used to transport relatively heavy structures and/or other types of articles, such as fracturing equipment and fracturing sand. A transport can be independently movable from another transport. For example, a first transport can be mounted or connected to a motorized vehicle that independently moves the first transport while an unconnected second transport remains stationary.

[0083] As used herein, the term "trailer" refers to a transportation assembly used to transport relatively heavy structures and/or other types of articles (such as fracturing equipment and fracturing sand) that can be attached and/or detached from a transportation vehicle used to pull or tow the trailer. As an example, the transportation vehicle can independently move and tow a first trailer while an unconnected second trailer remains stationary. In one or more embodiments, the trailer includes mounts and manifold systems to connect the trailer to other fracturing equipment within a fracturing system or fleet. The term "lay-down trailer" refers to a specific embodiment of a trailer that includes two sections with different vertical heights. One of the sections or the upper section is positioned at or above the trailer axles and another section or the lower section is positioned at or below the trailer axles. In one embodiment, the main trailer beams of the lay-down trailer may be resting on the ground when in operational mode and/or when uncoupled from a transportation vehicle, such as a tractor.

[0084] At least one embodiment is disclosed and variations, combinations, and/or modifications of the embodiment(s) and/or features of the embodiment(s) made by a person having ordinary skill in the art are within the scope of the disclosure. Alternative embodiments that result from combining, integrating, and/or omitting features of the embodiment(s) are also within the scope of the disclosure. Where numerical ranges or limitations are expressly stated, such express ranges or limitations may be understood to include iterative ranges or limitations of like magnitude falling within the expressly stated ranges or limitations (e.g., from about 1 to about 10 includes, 2, 3, 4, etc.; greater than 0.10 includes 0.11, 0.12, 0.13, etc.). The use of the term "about" means ±10% of the subsequent number, unless otherwise stated.

[0085] Use of the term "optionally" with respect to any element of a claim means that the element is required, or alternatively, the element is not required, both alternatives being within the scope of the claim. Use of broader terms such as comprises, includes, and having may be understood to provide support for narrower terms such as consisting of, consisting essentially of, and comprised substantially of. Accordingly, the scope of protection is not limited by the

description set out above but is defined by the claims that follow, that scope including all equivalents of the subject matter of the claims. Each and every claim is incorporated as further disclosure into the specification and the claims are embodiment(s) of the present disclosure.

[0086] While several embodiments have been provided in the present disclosure, it should be understood that the disclosed systems and methods might be embodied in many other specific forms without departing from the spirit or scope of the present disclosure. The present examples are to be considered as illustrative and not restrictive, and the intention is not to be limited to the details given herein. For example, the various elements or components may be combined or integrated in another system or certain features may be omitted, or not implemented.

[0087] In addition, techniques, systems, subsystems, and methods described and illustrated in the various embodiments as discrete or separate may be combined or integrated with other systems, modules, techniques, or methods without departing from the scope of the present disclosure. Other items shown or discussed as coupled or directly coupled or communicating with each other may be indirectly coupled or communicating through some interface, device, or intermediate component whether electrically, mechanically, or otherwise.

What is claimed is:

1. A fracturing transport, comprising:

a prime mover having a motor shaft and being operable to transmit drive to the motor shaft;

a first pump disposed adjacent the prime mover;

a first gear box connected to the first pump;

a first gear shaft disposed on the first gear box; and

a first coupling disposed between the transmitted drive of the motor shaft and the gear shaft and being selectively coupleable between a coupled condition and an uncoupled condition, the first coupling in the coupled condition transferring the transmitted drive to the first gear box, the first coupling in the uncoupled condition isolating the transmitted drive from the first gear box.

2. The transport of claim **1**, wherein the first coupling is disposed with the first gear shaft and is selectively coupleable between the coupled condition and the uncoupled condition relative to the first gear box, the first coupling in the coupled condition transferring the transmitted drive of the first gear shaft to the first gear box, the first coupling in the uncoupled condition isolating the transmitted drive of the first gear shaft from the first gear box.

3. The transport of claim **2**, wherein the first gear box is disposed externally on the first pump; and wherein the first gear shaft comprises first and second ends extending from opposite sides of the first gear box, the first end disposed toward the prime mover and connected to the transmitted drive of the motor shaft, the second end having the first coupling.

4. The transport of claim **1**, wherein the first coupling comprises a spline coupling, a clutch, an air clutch, an electro-magnetic clutch, a hydraulic clutch, or a plate clutch.

5. The transport of claim **1**, wherein the first coupling comprises:

a first coupling element disposed on the first gear shaft and being rotated with the first gear shaft;

a second coupling element disposed on the first gear shaft and being rotatable relative to the first gear shaft, the second coupling element connected by the external gear box to the first pump for transferring the transmitted drive thereto; and

a first actuator engaged with the first coupling element and being actuatable to selectively couple the first coupling element between the coupled and uncoupled conditions relative to the second coupling element.

6. The transport of claim **5**, further comprising a bearing disposed between the first actuator and the first coupling element and isolating rotation of the first coupling element from the first actuator.

7. The transport of claim **5**, wherein the first coupling element comprises a spline hub being longitudinally movable along the first gear shaft relative to the second coupling element between the coupled and uncoupled conditions; and wherein the second coupling element comprises a spline gear being mated with the spline hub in the coupled condition and being unmated with the spline hub in the uncoupled condition.

8. The transport of claim **1**, wherein the first coupling comprises a first actuator engaged with the first coupling and configured to selectively couple the first coupling between the coupled and uncoupled conditions relative to the first gear box.

9. The transport of claim **8**, wherein the first actuator comprises a hydraulic piston, a pneumatic piston, an electric motor, or an electric solenoid.

10. The transport of claim **8**, wherein the first actuator comprising a control system in communication with the first actuator and transmitting actuation to the first actuator to selectively couple the first coupling relative to the first gear box.

11. The transport of claim **1**, wherein the first pump comprises:

a power assembly coupled to the first gear box to receive the transferred drive; and

a fluid assembly driven by the power assembly and configured to pressurize fluid.

12. The fracturing transport of claim **1**, wherein the prime mover comprises an electric motor or a hydrocarbon fuel-based motor.

13. The fracturing transport of claim **1**, further comprising:

a second pump disposed adjacent the prime mover;

a second gear box connected to the second pump;

a second gear shaft disposed on the second gear box and connected to the transmitted drive of the motor shaft; and

a second coupling disposed between the motor shaft and the second gear shaft and being selectively coupleable between a coupled condition and an uncoupled condition, the second coupling in the coupled condition transferring the transmitted drive to the second gear box, the second coupling in the uncoupled condition isolating the transmitted drive from the second gear box.

14. The transport of claim **13**, wherein the second coupling comprises an actuator engaged with the second coupling and configured to selectively couple the second coupling between the coupled and uncoupled conditions relative to the second gear box.

15. The transport of claim **13**, wherein the first and second couplings are separately actuatable to selectively couple the

respective coupling between the coupled and uncoupled conditions relative to the respective gear box.

16. The transport of claim **1**, wherein the first coupling comprises a plate clutch coupling disposed with a first end of the motor shaft.

17. The transport of claim **1**, wherein the first coupling comprises a plate clutch coupling disposed with a first end of the gear shaft.

18. A pump powered by transmitted drive of a prime mover to pump fluid, the pump comprising:

a fluid assembly configured to pressurize the fluid;

a power assembly coupled to the fluid assembly and transferring the transmitted drive to the fluid assembly;

a gear box coupled externally to the power end assembly and transferring the transmitted drive to the power end assembly;

a gear shaft disposed on the gear box, the gear shaft coupled to the prime mover and receiving the transmitted drive therefrom; and

an engagement coupling disposed with the gear shaft and being selectively coupleable between a coupled condition and an uncoupled condition relative to the gear box, the engagement coupling in the coupled condition transferring the transmitted drive of the gear shaft to the gear box, the engagement coupling in the uncoupled condition isolating the transmitted drive of the gear shaft from the gear box.

19. The pump of claim **18**, wherein the engagement coupling comprises an actuator engaged with the engagement coupling and configured to selectively couple the engagement coupling between the coupled and uncoupled conditions relative to the gear box.

20. The pump of claim **18**, wherein the engagement coupling comprises:

a spline hub rotatable relative to the gear shaft and coupled to the gear box; and

a spline coupling rotating with the gear shaft and selectively mating with the spline gear.

21. The pump of claim **18**, wherein the gear shaft comprises a first end disposed toward the prime mover; and wherein the engagement coupling is disposed with the first end of the gear shaft.

22. The pump of claim **18**, wherein the gear shaft comprises first and second ends extending from opposite sides of the gear box, the first end disposed toward the prime mover and connected to the transmitted drive of the motor shaft, the second end having the engagement coupling.

23. A method of pumping fracture fluid with a pump having a fluid end assembly powered by a power end assembly driven by a prime mover, the method comprising:

rotating a gear box shaft of a gear box coupled to the power end assembly by receiving drive from the prime mover at a first end of the gear box shaft; and

selectively transferring the received drive from the gear box shaft to the gear box by:

engaging an engagement coupling, disposed on a second end of the gear box shaft, with the gear box and transmitting the rotation of the gear box shaft to the gear box, and

disengaging the engagement coupling from the gear box and rotating the gear box shaft without transmission of the rotation to the gear box.

24. The method of claim **23**, wherein engaging and disengaging the engagement coupling from the gear box connector includes utilizing hydraulic power to move the engagement coupling.

* * * * *