IN THE UNITED STATES PATENT AND TRADEMARK OFFICE

_____

BEFORE THE PATENT TRIAL AND APPEAL BOARD

_____

HS HYOSUNG ADVANCED MATERIALS CORP.,

Petitioner,

v.

KOLON INDUSTRIES, INC.,

Patent Owner.

_____

Case No. IPR2025-00662

U.S. Patent No. 9,789,731

_____

PETITION FOR *INTER PARTES* REVIEW OF CLAIMS 1-7 OF U.S. PATENT NO. 9,789,731

Kolon Industries, Inc.
Exhibit 2026
HS Hyosung v. Kolon
IPR2025-00663
Ex. 2026-001

TABLE OF CONTENTS

I. Introduction 12

II. Standing 13

III. Technical Background 14

IV. Overview of the '731 Patent 17

A. Priority 17

B. Prosecution History 17

C. Disclosure 18

V. Grounds 19

VI. Level of Ordinary Skill 19

VII. Claim Construction 20

VIII. Ground 1: Claims 1, 2, 4, and 6-7 Are Rendered Obvious By Tamura in view of Baldwin or Baek 20

A. Overview of the Prior Art 20

1. Tamura (EX1006) 20

2. Baldwin (EX1007) 21

3. Baek (EX1008) 22

B. Motivation to Combine 23

C. Reasonable Expectation of Success 25

D. Claim-by-Claim Analysis 25

1. Claim 1: 25

2. Claim 2: The hybrid fiber of claim 1, wherein weight ratio of the nylon primarily-twisted yarn to the aramid primarily-twisted yarn is 20:80 to 80:20. 37

3. Claim 4 39

4. Claim 6: The method of claim 4, wherein the step of coating the ply yarn with an adhesive comprises: submerging the yarn into an adhesive solution; drying the ply yarn having the adhesive solution impregnated therein; and heat-treating the dried ply yarn. 40

5. Claim 7: The method of claim 6, wherein the adhesive solution comprises Resorcinol – Formaldehyde - Latex adhesive. 41

IX. Ground 2: Claim 3 Is Rendered Obvious by Tamura in view of Baldwin or Baek and further in view of Barnes 41

A. Overview of Prior Art 41

1. Barnes (EX1009) 41

B. Motivation to Combine 42

C. Reasonable Expectation of Success 43

D. Claim Analysis 43

1. Claim 3: The hybrid fiber of claim 1, wherein the hybrid fiber cord has breaking tenacity of 8.0 to 15.0 g/d and elongation at break of 7 to 15%, the breaking tenacity and elongation at break being measured according to ASTM D885 (2004). 43

X. Ground 3: Claim 5 Is Rendered Obvious by Tamura in view Baldwin or Baek and further in view of Rowan and/or Buchanan 46

A. Overview of Prior Art 46

1. Rowan (EX1015) 46

2. Buchanan (EX1010) 47

B. Motivation to Combine 48

C. Reasonable Expectation of Success 50

D. Claim Analysis 51

1. Claim 5: The method of claim 4, wherein the first, second and third steps are performed simultaneously and continuously. 51

XI. Ground 4: Claims 1-4 and 6-7 are Rendered Obvious by Chung In view of Harikae and Further in view of Yokokura 56

A. Overview of Prior Art 56

1. Chung (EX1012) 56

2. Harikae (EX1013) 56

3. Yokokura (EX1014) 57

B. Motivation to Combine 58

C. Reasonable Expectation of Success 61

D. Claim-by-Claim Analysis 62

1. Claim 1: 62

2. Claim 2 77

3. Claim 3 78

4. Claim 4 79

5. Claim 6 80

6. Claim 7 81

XII. Ground 5: Claim 5 is Rendered Obvious by Chung in view of Harikae and Yokokura, and further in view of Rowan and/or Buchanan 82

A. Motivation to Combine 82

B. Reasonable Expectation of Success 82

C. Claim Analysis 83

1. Claim 5: 83

XIII. The Board Should Not Exercise Its Discretion to Deny Institution 84

A. Fintiv 84

B. §325(d) 87

XIV. Mandatory Notices and Fees 88

A. Real Party-in-Interest 88

B. Related Matters 88

C. Counsel and Service Information 89

D. Payment of Fees 89

XV. Conclusion 89

EXHIBIT LIST

EX	Description
1001	U.S. Patent No. 9,789,731 ("the '731 patent")
1002	File History of the U.S. Patent No. 9,789,731
1003	Declaration of Jon Rust, Ph.D.
1004	*Curriculum Vitae* of Jon Rust, Ph.D.
1005	Japanese Patent No. 2009-68549 ("Tamura")
1006	Certified Translation of Japanese Patent No. 2009-68549 ("Tamura")
1007	U.S. Patent Pub. No. 2009/0090447 ("Baldwin")
1008	Certified Translation of Korean Patent Disclosure No. 10-0245520 ("Baek")
1009	U.S. Patent Pub. No. 2009/124149 ("Barnes")
1010	European Patent Pub. No. 0405887A1 ("Buchanan")
1011	U.S. Patent Pub. No. 2004/0108037 ("Osborne")
1012	Certified Translation of Korean Patent Disclosure No. 10-2006-0126101 ("Chung")
1013	Certified Translation of Japanese Patent Publication No. 2007-216778 ("Harikae")
1014	U.S. Patent Pub. No. 2010/0071826 ("Yokokura")
1015	U.S. Patent Pub. No. 2005/0249949 ("Rowan")
1016	U.S. Patent No. 3,977,172 ("Kerawalla")
1017	U.S. Patent No. 4,652,252 ("Westoff")

1018	Certified Translation of Korean Patent Disclosure No. 10-0245520 ("Baek")
1019	Korean Patent Disclosure No. 10-2006-0126101 ("Chung")
1020	Japanese Patent Publication No. 2007-216778 ("Harikae")
1021	Certified Translation of PCT Publication No. WO 2009/134063 ("Kwon")
1022	Non-rubberized Cap-Ply Reinforcements, Angela Filipa Saraiva da Rocha, Continental (July 2014)
1023	U.S. Patent Pub. No. 2003/0159768 ("Fritsch")
1024	*Intentionally Left Blank*
1025	Kolon Industries, Inc., v. Hyosung, Advanced Materials Corp. et al, No. 8:24-cv-00415-JVS-JDE (CDCA) ("Third Amended Complaint")
1026	U.S. Patent No. 7,968,475 ("Carabajal")
1027	ASTM International. *ASTM D885-01: Standard Test Methods for Tire Cords, Tire Cord Fabrics, and Industrial Filament Yarns Made from Man-Made Organic-Base Fibers.* ASTM International, 2001.
1028	ASTM International. *ASTM D885-02: Standard Test Methods for Tire Cords, Tire Cord Fabrics, and Industrial Filament Yarns Made from Man-Made Organic-Base Fibers.* ASTM International, 2002.
1029	ASTM International. *ASTM D885-03: Standard Test Methods for Tire Cords, Tire Cord Fabrics, and Industrial Filament Yarns Made from Man-Made Organic-Base Fibers.* ASTM International, 2003.
1030	ASTM International. *ASTM D885-04: Standard Test Methods for Tire Cords, Tire Cord Fabrics, and Industrial Filament Yarns*

	Made from Man-Made Organic-Base Fibers. ASTM International, 2004.
1031	ASTM International. *ASTM D885-06: Standard Test Methods for Tire Cords, Tire Cord Fabrics, and Industrial Filament Yarns Made from Man-Made Organic-Base Fibers.* ASTM International, 2006.
1032	ASTM International. *ASTM D885-07: Standard Test Methods for Tire Cords, Tire Cord Fabrics, and Industrial Filament Yarns Made from Man-Made Organic-Base Fibers.* ASTM International, 2007.
1033	*Aramid-Nylon 6.6 Hybrid Cords and Investigation of Their Properties*, Rubber Chemistry and Technology, Vol., 85, No. 2, pp. 180-194 (2012) ("Yilmaz")
1034	*Intentionally Left Blank*
1035	PCT Publication No. WO 2009/134063 ("Kwon")
1036	Japanese Industrial Standard JIS L 1017 (1995)

LIST OF CHALLENGED CLAIMS

Claim No.	Claim Language
[1pre]	A hybrid fiber cord comprising:
1[a]	a nylon primarily-twisted yarn having a first twist number of 300 to 500 TPM;
1[b]	an aramid primarily-twisted yarn having a second twist number of 300 to 500 TPM; and
1[c]	an adhesive,
1[d]	wherein the first twist number is identical with the second number,
1[e]	wherein the nylon primarily-twisted yarn and the aramid primarily-twisted yarn are secondarily-twisted together at a third twist number which is identical with the first and second twist numbers and have identical structures with each other in the hybrid fiber,
1[f]	wherein the nylon primarily-twisted yarn and aramid primarily-twisted yarn which are secondarily-twisted together with the identical twist number form a 2-ply secondarily-twisted yarn consisting of 1-ply nylon primarily-twisted yarn and 1-ply aramid primarily-twisted yarn, and
1[g]	wherein the secondarily-twisted yarn is coated with the adhesive, and
1[h]	the secondarily-twisted yarn coated with the adhesive has a strength retention rate of 80% or more after a disc fatigue test is performed according to JIS-L 1017 method of Japanese Standard Association, and has a dry heat shrinkage of 1.5-2.5%.
2	The hybrid fiber of claim 1, wherein weight ratio of the nylon primarily-twisted yarn to the aramid primarily-twisted yarn is 20:80 to 80:20.

Claim No.	Claim Language
3	The hybrid fiber of claim 1, wherein the hybrid fiber cord has breaking tenacity of 8.0 to 15.0 g/d and elongation at break of 7 to 15%, the breaking tenacity and elongation at break being measured according to ASTM D885 (2004).
4[pre]	A method for manufacturing a hybrid fiber cord, the method comprising:
4[a]	a first step for primarily-twisting a nylon filament at a first twist number of 300 to 500 TPM to produce a nylon primarily-twisted yarn;
4[b]	a second step for primarily-twisting an aramid filament at a second twist number 300 to 500 TPM to produce an aramid primarily-twisted yarn;
4[c]	a third step for secondarily-twisting the nylon and aramid primarily-twisted yarns together at a third twist number to produce a ply yarn in such a way that the nylon and aramid primarily-twisted yarns have identical structures with each other; and
4[d]	coating the ply yarn with an adhesive, and the ply yarn coated with the adhesive has a strength retention rate of 80% or more after a disc fatigue test is performed according to JIS-L 1017 method of Japanese Standard Association, and has a dry heat shrinkage of 1.5 to 2.5%,
4[e]	wherein the first, second, and third twist numbers are identical with each other, and
4[f]	wherein the third step produces a 2-ply secondarily-twisted yarn consisting of 1-ply of nylon primarily-twisted yarn and 1-ply of aramid primarily-twisted yarn.
5	The method of claim 4, wherein the first, second and third steps are performed simultaneously and continuously.
6	The method of claim 4, wherein the step of coating the ply yarn with an adhesive comprises: submerging the yarn having the

Claim No.	Claim Language
	adhesive solution; drying the ply yarn having the adhesive solution impregnated therein; and heat-treating the dried ply yarn.
7	The method of claim 6, wherein the adhesive solution comprises Resorcinol – Formaldehyde - Latex adhesive.

I. INTRODUCTION

HS Hyosung Advanced Materials Corp. ("Petitioner") respectfully requests *inter partes* review of claims 1-7 of U.S. Patent No. 9,789,731 (the "'731 patent"). A reasonable likelihood exists that Petitioner will prevail on at least one challenged claim.

The '731 patent relates to "a hybrid fiber cord comprising a nylon filament and an aramid filament." EX1001, 1:6-9. The patent concedes that nylon-aramid hybrid fiber cords are conventional, but it purports to disclose a hybrid fiber cord "which can be made more easily and has more uniform physical properties and better strength and fatigue resistance than the conventional hybrid fiber cords." *Id.*, 2:49-61. According to the patent, "the process for manufacturing the hybrid fiber cord can be simplified ... since the twist number of the nylon-primarily twisted yarn is identical with that of the aramid primarily-twisted yarn." *Id.* at 3:32-36. "[B]y controlling the tensions applied to the nylon and aramid primarily-twisted yarns respectively during the twisting process to make them have identical structure with identical twist number, ... the property variableness and defect rate of the hybrid fiber cord can be reduced, and a hybrid fiber cord of improved strength and fatigue resistance which is useful for the cap ply of the tire for high speed driving can be provided." *Id.* at 3:37-47. According to the '731 patent, the allegedly stronger and more uniform hybrid fiber cord has a nylon twisted yarn and an aramid twisted yarn,

individually twisted the same number of times and then twisted together that same number of times.

But hybrid, nylon-aramid cords were made this way long before the ’731 patent. Indeed, these claimed steps, characteristics, and standard test measurements are old and well known. For example, the prior art discussed below in this petition teaches hybrid fiber cords with nylon yarn and aramid yarn having identical twist numbers. *See, e.g.*, EX1006 (Tamura); EX1012 (Chung); EX1013 (Harikae). Moreover, the claimed characteristics and measurement ranges are not inventive. *See Pfizer Inc. v. Sanofi Pasteur Inc.*, 94 F.4th 1341, 1347 (Fed. Cir. 2024). Rather, they are obvious result-effective variables obtained through routine optimization. *See In re Peterson*, 315 F.3d 1325, 1330 (Fed. Cir. 2003) (“The normal desire of scientists or artisans to improve upon what is already generally known provides the motivation to determine where in a disclosed set of percentage ranges is the optimum combination of percentages.”).

Thus, for at least the reasons below, *all* claims of the ’731 patent are invalid.

II. STANDING

Petitioner certifies that the ’731 patent is available for *inter partes* review and they are not estopped from requesting IPR under 35 U.S.C. §315(e)(1).

III. TECHNICAL BACKGROUND

One of the most important parts of a tire is its reinforcement. EX1003, ¶¶33-34. It provides strength and stability to the tire, like bones in a human body. EX1003, ¶34. Tire reinforcements can be made of various materials, including textiles. EX1003, ¶34. Originally, textile reinforcements were made of cotton, which was slowly replaced by rayon. EX1003, ¶34. And at the time of the '731 patent, nylon and aramid tire reinforcement materials were prevalent—particularly for use in the tire's cap ply. EX1003, ¶34. The "use of tire cords made from high tenacity organic fibers such as rayon, nylon, aramid, and polyester in a construction of moderate twist has remained the principal reinforcing method." EX1015 (Rowan), [0005].

One important way to enhance tire performance is to improve the physical properties of the tire cord used as a reinforcing material. EX1003, ¶35; EX1021 (Kwon), [2]. Previously, reinforcement cords were entirely nylon or entirely aramid. Aramid is a high-tenacity, high-modulus, low-elongation, and thermally-stable material. EX1003, ¶35. And nylon 6.6 is a high elongation, low-modulus, high-fatigue-resistant material. EX1003, ¶35. In the early 2000's, Michelin developed a new textile reinforcement which combined the beneficial aspects of nylon and aramid and significantly improved high-performance tires—i.e., the nylon-aramid

hybrid reinforcement cord. EX1003, ¶35. Hybrid cords are a combination of two or more types of yarns plies twisted together (e.g., a nylon yarn and an aramid yarn).

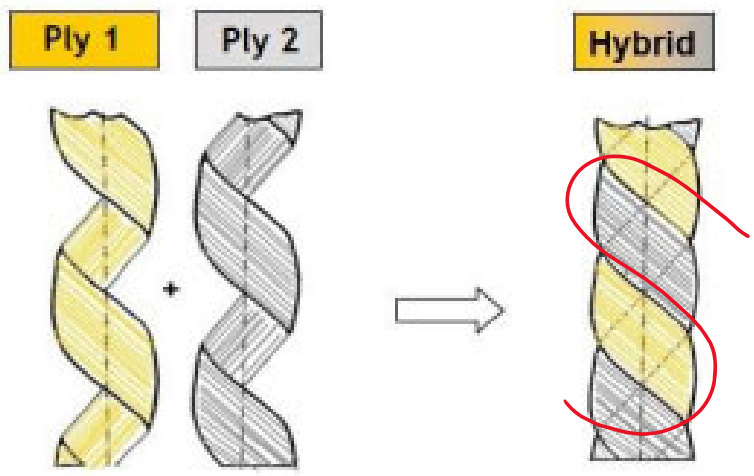

EX1022 (*annotation in red added*).

Each ply is twisted on its own axis and then with another ply before it is formed into a cord. EX1003, ¶36. The ply twisting directions are denoted by "z" and "s." EX1003, ¶36. If the direction of twist is from right to left, it is called "z" twist, and if the direction of twist is from left to right, it is called "s" twist. EX1003, ¶36. In some instances, each individual ply is twisted in the "z" direction and then the two individually-twisted plies are twisted together in "s" direction to form a cord. Twisting causes the cord to lose tensile strength, but it simultaneously gains flex fatigue resistance. EX1003, ¶36. Hence the number of times a ply is twisted must strike a balance between tensile strength and flex fatigue resistance. EX1003, ¶36.

Further, because textile fabric adheres poorly to rubber, the textile reinforcements have long been treated with adhesive solutions, commonly Resourcinol-Formaldehyde-Latex or other epoxies, which act as bonding agents between the textile reinforcement cord and the rubber tire. The illustration below shows how reinforcement cords adhere to a rubber cap ply. EX1003, ¶37.

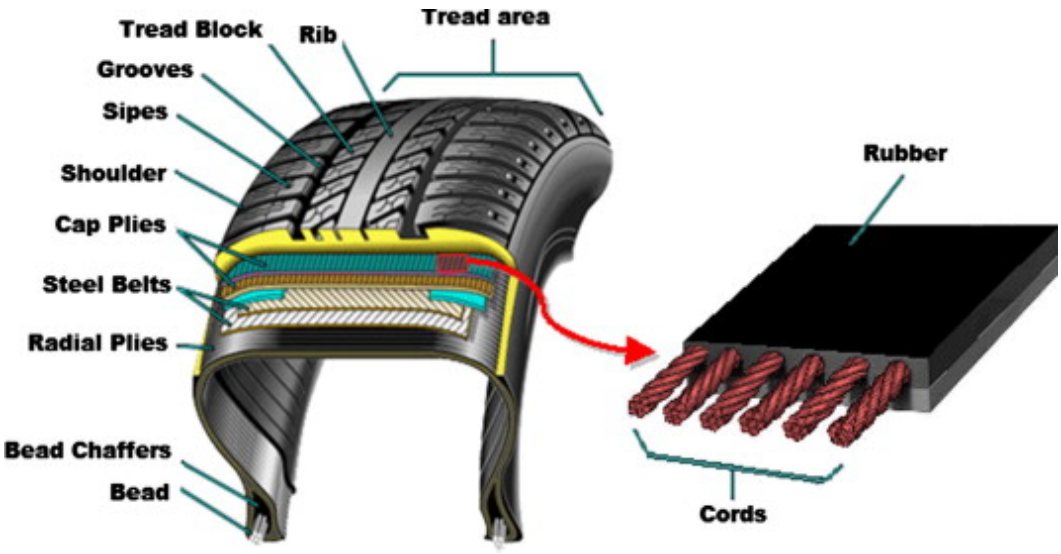

Drying and heat treating—i.e., stretching the textile cords at high temperatures—typically follows. This process reduces undesired thermal shrinkage. EX1003, ¶38.

On balance, aramid-nylon hybrid reinforcement cords were known to have better properties than the prior aramid-aramid and nylon-nylon cord constructions. EX1003, ¶39. For instance, when compared with aramid-aramid cords, the hybrid cords have improved fatigue resistance, higher elongation, lower raw material cost, and controlled shrinkage. EX1003, ¶39. And when compared with nylon-nylon

cords, the hybrid cord will have a lower shrinkage and improved handling and cornering stability, speed performance, and rolling resistance. EX1003, ¶39.

IV. OVERVIEW OF THE '731 PATENT

A. Priority

The '731 patent issued on October 17, 2017, and claims priority to Korean Patent Application No. KR 10-2012-0154933 filed on December 27, 2012. The PCT application that became the '731 patent was filed on December 23, 2013, and entered the U.S. national stage on April 24, 2015. The prior art references relied upon in this Petition predate December 27, 2012, the earliest possible critical date.

B. Prosecution History

The examiner twice rejected the application that became the '731 patent before allowing it. In both Office Actions, the examiner maintained that Baldwin teaches "a nylon primarily twisted yarn ... [and] an aramid primarily twisted yarn ... secondarily twisted together to have identical structures with each other." EX1002, (Non-Final Rejection (Sept. 29, 2016)), 193. And Patent Owner never challenged or disputed the examiner's position. Instead, Patent Owner argued that "Baldwin fails to teach or suggest a secondarily-twisted yarn coated with adhesive that has a strength retention rate of 80% or more after a disc fatigue test is performed according to JIS-L 1017 method of Japanese Standard Association, and has a dry heat shrinkage of 1.5 to 2.5%" and added this language to the independent claims to

overcome Baldwin. EX1002 (Reply to Office Action (Aug. 3, 2017), 30-31. The Patent Examiner subsequently allowed the application without providing any specific reasons for allowance. EX1003, ¶42.

C. Disclosure

The ’731 patent relates to a hybrid fiber cord and a method of manufacture. EX1001, 1:6-7. EX1003, ¶40. The disclosed hybrid fiber cord 100 includes a nylon z-twisted yarn 110 and an aramid z-twisted yarn 120, wherein the yarns have the same twist number. *Id.*, 3:6-10, 4:5-6. The nylon and aramid z-twisted yarns are then s-twisted together to form hybrid fiber cord 100, which has the same number of twists as the individual z-twisted yarns. *Id.*, 3:10-12, 3:23-24, 4:6-9.

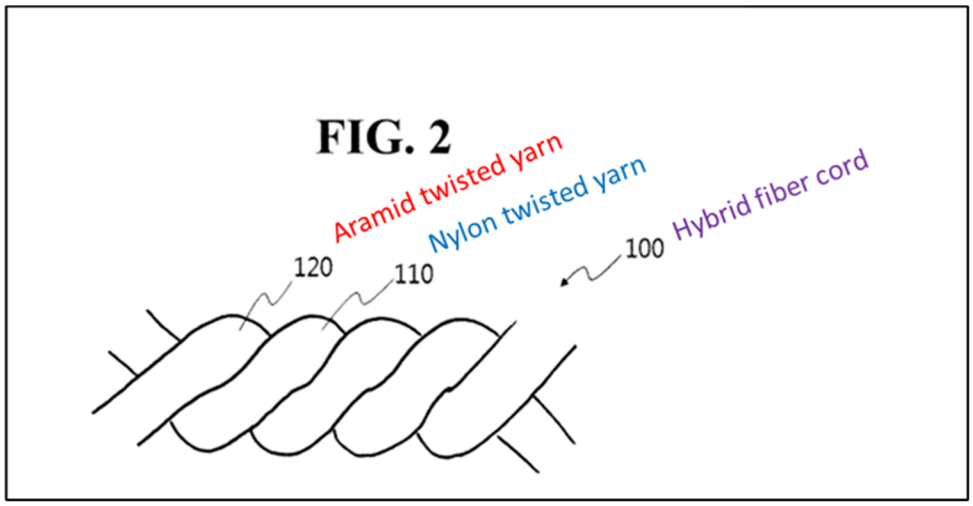

EX.1001, FIG. 2 (annotations added).

The ’731 patent further discloses submerging the hybrid fiber cord 100 into an adhesive solution (e.g., Resorcinol Formaldehyde Latex) to improve its adhesiveness with a tire, followed by a drying and heat-treatment process. EX1001,

7:40-44; EX1003, ¶41. According to the patent, the hybrid fiber cord made using this method has a breaking tenacity of 8.0 to 15.0 g/d, elongation at break of 7 to 15%, and dry heat shrinkage of 1.5 to 2.5%, and a strength retention rate of 80% or more. *Id.*, 8:1-5, 8:15-19.

V. GROUNDS

Ground	Basis	Reference(s)	Claims
1	§103	Tamura, Baldwin or Baek	1, 2, 4, 6-7
2	§103	Tamura, Baldwin or Baek, Barnes	3
3	§103	Tamura, Baldwin or Baek, Rowan and/or Buchanan	5
4	§103	Chung, Harikae, Yokokura	1-4 and 6-7
5	§103	Chung, Harikae, Yokokura, Rowan and/or Buchanan	5

VI. LEVEL OF ORDINARY SKILL

A person of ordinary skill in the art ("POSITA") at the time of the '731 patent would have had at least a Bachelor of Science degree in materials science and engineering, textile engineering, chemistry, or an equivalent field, and at least two years of experience with tire reinforcement cord design and manufacture, and/or fiber or polymer science and processing. EX1003, ¶¶43-47. More education can supplement practical experience and vice versa. *Id.* Petitioner's expert, Dr. Jon Rust, exceeded this skill level by the priority date and has thus the qualification and

experience necessary to assess the ’731 patent based on the perspective of a POSITA. *Id.*, ¶¶4-32.

VII. CLAIM CONSTRUCTION

For the purposes of this proceeding, Petitioner contends that no claim terms need express construction because the prior art presented below reads on each claim term under any construction consistent with *Phillips*, and should thus be given their plain and ordinary meaning. EX1003, ¶¶20-21, 48-49.

VIII. GROUND 1: CLAIMS 1, 2, 4, AND 6-7 ARE RENDERED OBVIOUS BY TAMURA IN VIEW OF BALDWIN OR BAEK[1]

A. Overview of the Prior Art

1. Tamura (EX1006)

The Japanese application that published as Tamura was filed on September 11, 2007, and published on April 2, 2009. Tamura (JP 2009-68549) thus qualifies as prior art to the ’731 patent under at least §102(b).

Tamura discloses and claims a large diameter rubber hose reinforced by compounding fiber fabric and/or fiber cord composed of a composite fiber of aramid fiber and nylon fiber. EX1003, ¶¶51-53; EX1006, [claim 1]. Tamura discloses that,

[1] Patent Owner has not identified any secondary considerations of non-obviousness. Petitioner reserves the right to address any purported secondary considerations, if raised by Patent Owner.

like tires, large diameter hoses used for transporting large amounts of liquid (e.g., crude oil) are generally subjected to high pressures and thus require a reinforcing layer. *See id.*, [0002]. According to Tamura, the "above-mentioned composite fiber cord is obtained by lower twisting a predetermined number of aramid fibers and nylon fibers, each of which is individually twisted, and then upper twisting the resulting fibers together." *Id.*, [0018]. "The number of lower twists is usually set to be the same as the number of upper twists." *Id.*, [0023].

2. Baldwin (EX1007)

The application that published as Baldwin was filed provisionally on November 9, 2007, and non-provisionally on October 5, 2007. Baldwin (US 2009/0090447) published on April 9, 2009, and thus qualifies as prior art to the '731 patent under at least §102(b).

Baldwin discloses a "cable [ ] formed of an aramid yarn and a nylon yarn cabled together." EX1007, Abstract; EX1003, ¶54. FIG. 1 of Baldwin illustrates "a composite or hybrid cord [] comprised of one or more yarns of aramid 3, and more preferably, only a single yarn" and a "nylon yarn 2 ... [p]referably only a single yarn of nylon is used." EX1007, [0062]-[0063].

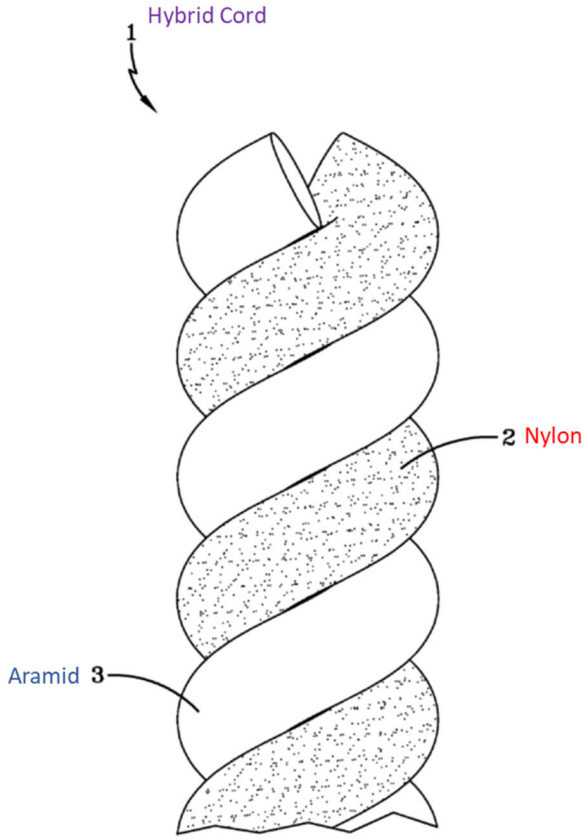

FIG−1

EX1007, FIG. 1 (color annotations added).

3. Baek (EX1008)

The Korean patent that published as Baek was filed on September 25, 1997, and published on March 2, 2000. Baek (KR 10-0245520) thus qualifies as prior art to the ’731 patent under at least §102(b).

Baek discloses “a fiber cord composed of aramid and nylon with excellent structural stability and adhesiveness.” EX1008, Abstract; EX1003, ¶¶55-56. It is “formed by twisting nylon ply with excellent adhesive strength and aramid ply with

excellent structural stability." EX1008, 4-2. According to Baek, this hybrid aramid-nylon cord (shown in FIG. 2) compensates for the weak adhesion of the conventional aramid cord (shown in FIG. 1). *Id*.

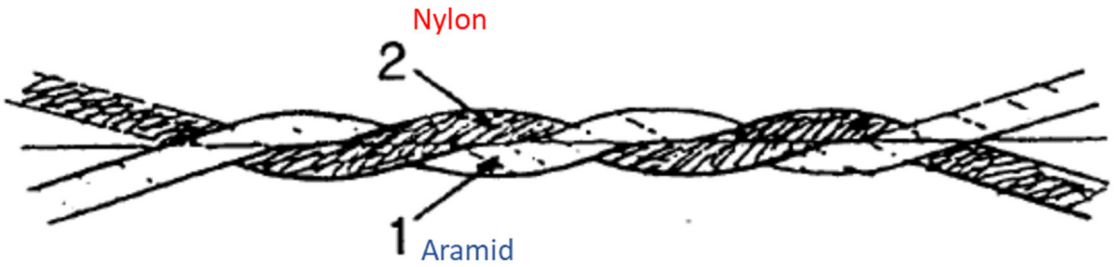

EX1008, FIG. 2

B. Motivation to Combine

A POSITA would have been motivated to combine Tamura's teachings of twisted aramid and nylon yarns having *the same twist number* and the teachings of Baldwin and Baek disclosing twisted aramid and nylon yarns having *identical structures* to construct an aramid-nylon hybrid tire cords having aramid and nylon yarns with the same twist number and the same structure. EX1003, ¶¶74-78.

There are a few distinctive benefits of tensioning and twisting the aramid and nylon yarns to have the same structure. First, as Westhoff explains, "[a]s recognized by Kerawalla, it is well known in the art that the ends (i.e., individual plies) should be approximately equal in size ... in order to obtain a balanced cord. EX1017 (Westhoff), 3:32-35; EX1016 (Kerawalla), 1:42-43. Balanced cords do not twist upon themselves when released from a spool. EX1017, 3:35-37. Notably, both

Westhoff and Kerawall disclose twisting aramid and nylon yarns that have the same twist number ***and*** equal size. EX1017, 6:27-29; EX1016, 1:43-45.

Second, hybrid tire cords can be made faster and easier using direct cable machines, which operate at high speeds. For example, Rowan teaches that direct cable machines "combine the ply and twisting step into one operation, thus rendering the tire cord production process more efficient and cost effective." EX1015, [0007]. Direct cable machines are "designed and intended to obtain balanced cord constructions by means of rolls and brakes that control the yarn tension of the two yarn ends and therefore yields a balanced construction having a balanced configuration." EX1023, [0023]. "If one untwists a given length of a direct cabler product, the two constituent yarns ... will have a twist number which is equal to, and opposite in hand to, the twist number in the parent cabled cord at the given length of cord[, which] ... will occur regardless of the coring level in the cabled cord." *Id*.

Third, non-uniform (or unbalanced) cord constructions can often lead to uneven stress distribution within the tire and compromise tire performance. EX1003, ¶77. A POSITA would have appreciated that unbalanced cords have an internal torque that would add stress to the tire construction because the torque is a force attempting to untwist the cord. As a result, with many torque forces acting together, the tire performance would be less stable. EX1003, ¶77.

Further, Tamura, Baldwin, and Baek are analogous to each other and to the ’731 patent. Each teaches a tire cord comprising a twisted aramid yarn and a twisted nylon yarn that are twisted together to form a hybrid cord. *See supra* §§VIII.A and IV.C. And each is concerned with improving the strength, reliability, and performance of tires. EX1001, 2:49-54; EX1007, [0003]; EX1008, 4-3.

C. Reasonable Expectation of Success

A POSITA would have had a reasonable expectation of success in combining the teachings of Tamura with those of Baldwin or Baek. As described above, *supra* §VIII.B, it is old and well known that a direct cable corder machine can be used to construct the nylon and aramid twisted yarns to have the identical structures. Knowing the relative mass densities of aramid and nylon, a POSITA could determine the appropriate linear density of each yarn and the appropriate tension to apply to each yarn to ensure they have structures identical to each other when they are twisted together. EX1003, ¶79.

D. Claim-by-Claim Analysis

1. Claim 1:

(a) [1pre]: A hybrid fiber cord comprising:

To the extent the preamble is limiting, Tamura discloses “a large-diameter rubber hose ... reinforced by compounding fiber fabric and/or fiber cord, characterized in that the fiber fabric and/or fiber cord is composed of a composite

fiber of aramid fiber and nylon fiber." EX1006, [0011], [0018] ("In the present invention, the above-mentioned aramid fibers and nylon fibers are composited to form aramid/nylon composite fiber cords and composite fiber fabrics."). A POSITA would have understood a "fiber cord [ ] composed of a composite fiber of aramid fiber and nylon fiber" to be ***a hybrid fiber cord***. EX1003, ¶¶80-81.

(b) [1a]: a nylon primarily-twisted yarn having a first twist number of 300 to 500 TPM;

Tamura discloses that the "composite fiber cord is obtained by lower twisting a predetermined number of aramid fibers and nylon fibers, each of which is individually twisted, and then upper twisting the resulting fibers together." EX1006, [0018]; EX1003, ¶¶82-83. In embodiments 1 and 2 of Tamura, the nylon fibers are individually twisted between 300 and 500 twists per meter (TPM). Specifically, in the first embodiment, the nylon fiber has a twist number of 36 twists/10cm (or 360 TPM), and in the second embodiment, the nylon fiber has a twist number of 31 twists/10 cm (or 310 TPM).

			Number of twists (twists/10 cm)			
			Upper twist (S)	Lower twist (Z)		
				Aramid fiber	N66	PET
Comparative Example	1		39		39	
	2		39			39
Embodiment	1		36	36	36	
	2	* * * [excerpted]	31	31	31	
	3		31	31	23	
	4		32	32	32	
	5		30	30	30	
	6		30	30	30	

EX1006, TABLE 1 (excerpted and color annotations added).

(c) [1b]: an aramid primarily-twisted yarn having a second twist number of 300 to 500 TPM; and

Tamura discloses that the "composite fiber cord is obtained by lower twisting a predetermined number of aramid fibers and nylon fibers, each of which is individually twisted, and then upper twisting the resulting fibers together." EX1006, [0018]; EX1003, ¶¶84-85. In embodiments 1 and 2 of Tamura, the aramid fibers are individually twisted between 300 and 500 twists per meter (TPM). Specifically, in the first embodiment, the aramid fiber has a twist number of 36 twists/10cm (or 360 TPM), and in the second embodiment, the aramid fiber has a twist number of 31 twists/10 cm (or 310 TPM).

			Number of twists (twists/10 cm)			
			Upper twist (S)	Lower twist (Z)		
				Aramid fiber	N66	PET
Comparative Example	1		39		39	
	2		39			39
Embodiment	1		36	36	36	
	2	* * * [excerpted]	31	31	31	
	3		31	31	23	
	4		32	32	32	
	5		30	30	30	
	6		30	30	30	

EX1006, TABLE 1 (excerpted and color annotations added).

(d) [1c]: an adhesive,

Tamura discloses that "the composite fiber fabric and/or the composite fiber cord are immersed in ***adhesive***, dried, and heat-treated." EX1006, [0031] (emphasis added); EX1003, ¶¶86-87. According to Tamura, the "reinforcing layers, each of which is made of fiber fabric and/or fiber cord[,] [are] composed of aramid fibers and nylon fibers and coated on both sides with ***adhesive*** rubber." *Id.*, [0030] (emphasis added).

(e) [1d]: wherein the first twist number is identical with the second number,

Tamura discloses embodiments (e.g., embodiments 1 and 2) in which the first twist number (i.e., twist number for the nylon fiber) is identical with the second twist number (i.e., the twist number for the aramid fiber). EX1003, ¶¶88-89.

			Number of twists (twists/10 cm)			
			Upper twist (S)	Lower twist (Z)		
				Aramid fiber	N66	PET
Comparative Example	1		39		39	
	2		39			39
Embodiment	1		36	36	36	
	2	* * * [excerpted]	31	31	31	
	3		31	31	23	
	4		32	32	32	
	5		30	30	30	
	6		30	30	30	

EX1006, TABLE 1 (excepted and color annotations added).

(f) [1e]: wherein the nylon primarily-twisted yarn and the aramid primarily-twisted yarn are secondarily-twisted together at a third twist number which is identical with the first and second twist numbers and have identical structures with each other in the hybrid fiber,

Tamura discloses a "composite fiber cord is obtained by lower twisting [(i.e., primarily-twisting)] a predetermined number of aramid fibers and nylon fibers, each of which is individually twisted, and then upper twisting [(i.e., secondarily-twisting)]

the resulting fibers together." EX1006, [0018]; EX1003, ¶¶90-92. According to Tamura, "the number of lower twists is usually set to be the same as the number of upper twists." *Id.*, [0023]. Table 1 of Tamura provides the embodiments that disclose this limitation:

			Number of twists (twists/10 cm)			
			Upper twist (S)	Lower twist (Z)		
				Aramid fiber	N66	PET
Comparative Example	1		39		39	
	2		39			39
Embodiment	1		36	36	36	
	2	* * * [excerpted]	31	31	31	
	3		31	31	23	
	4		32	32	32	
	5		30	30	30	
	6		30	30	30	

EX1006, TABLE 1 (excepted and color annotations added).

- ***The nylon primarily-twisted yarn and the aramid primarily-twisted yarn have identical structures with each other in the hybrid fiber[2]C***

[2] The '731 patent fails to define, adequately disclose, or enable the full scope of the term "identical structures." Irrespective of this lacking disclosure, however, Tamura, Baldwin, and Baek expressly teach features of the nylon and aramid yarns that qualify as having "identical structures" under Patent Owner's apparent interpretation

Tamura further discloses that the ***nylon primarily-twisted yarn*** (i.e., nylon lower twisted fiber) and the ***aramid primarily-twisted yarn*** (i.e., aramid lower twisted fiber) ***have identical structures with each other in the hybrid fiber***, under Patent Owner's interpretation of the term "identical structures." EX1003, ¶¶93-96. For example, in its district court complaint (EX1025 (Third Amended), ¶158), Patent Owner alleges that the accused product satisfies the "identical structures" limitation because the manufacture process includes "a third step for secondarily-twisting the nylon and aramid primarily-twisted yarns together at a third twist number ***to produce a ply yarn in such a way that the nylon and aramid primarily-twisted yarns have identical structures with each other***" where "the first, second, and third twist numbers are identical with each other." EX1025, ¶158, 161 (emphasis added). As explained above, Tamura likewise discloses a third step for secondarily-twisting the nylon and aramid primarily-twisted yarns together at a third twist number that is identical to the first and second twist number. Thus, Tamura discloses the "identical structures" limitation according to Patent Owner's treatment of the term in its district court complaint.

---

of that term as explained below, as a POSITA would readily understand. EX1003, ¶94-95.

Moreover, a POSITA would have understood the figures provided in Baldwin and Baek to disclose a ***nylon primarily-twisted yarn*** 2 and an ***aramid primarily-twisted yarn*** 3 ***having identical structures with each other in the hybrid fiber***. EX1003, ¶95. Longstanding precedent explains that the court "evaluate[s] and appl[ies] the teachings of all relevant references on the basis of what they reasonably disclose and suggest to one skilled in the art." *In re Aslanian*, 590 F.2d 911, 914 (CCPA 1979). Thus, "a drawing in a utility patent can be cited against the claims of a utility patent application even though the feature shown in the drawing was unintended or unexplained in the specification of the reference patent." *Id.*; *see In re Mraz,* 455 F.2d 1069, 173 USPQ 25 (CCPA 1972) (explaining that drawings and pictures can anticipate claims if they clearly show the structure which is claimed).

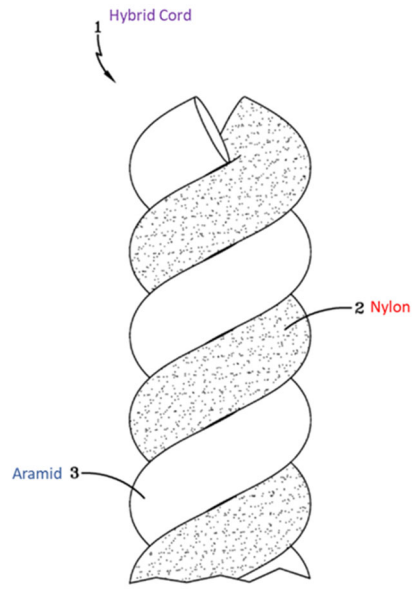

EX1007 (Baldwin); FIG. 1

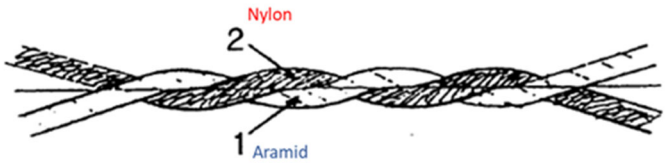

EX1008 (Baek); FIG. 2

Moreover, the '731 patent discloses that "the nylon primarily-twisted yarn 110 and aramid primarily-twisted yarn 120 can have identical structures, i.e., the ply yarn 100 can have a stable overall structure, and thus the non-uniformity of the properties and defective products that might be caused to the conventional hybrid fiber cord due to the loop and shape non-uniformity can be remarkably reduced." EX1001, 7:27-33. To the extent Patent Owner argues that the term "identical structures" requires the ply yarn to have a stable overall structure, Baek expressly discloses that the "fiber cord composed of aramid and nylon ha[s] ***excellent structural stability***." EX1008, Abstract (emphasis added).

(g) [1f]: wherein the nylon primarily-twisted yarn and aramid primarily-twisted yarn which are secondarily-twisted together with the identical twist number form a 2-ply secondarily-twisted yarn consisting of 1-ply nylon primarily-twisted yarn and 1-ply aramid primarily-twisted yarn, and

Tamura discloses that ***the nylon primarily-twisted yarn*** (i.e., nylon lower twisted fiber) is 1-ply, ***the aramid primarily-twisted yarn*** (i.e., aramid lower twisted fiber) is 1-ply, and the ***secondarily-twisted yarn*** (i.e., nylon/aramid composite upper-twisted fiber cord) is 2-ply. *See* EX1006, [0014]-[0018]. In the context of tires, a POSITA would have understood that the term "ply" is a term of art that can refer to a single yarn. EX1003, ¶98. For example, Rowan discloses that "'ply' means a twisted single yarn." EX1015. Accordingly, a POSITA would have understood that

a twisted fiber is 1-ply, and a twisted fiber cord made of two 1-ply fibers is a 2-ply cord. EX1003, ¶¶97-98.

(h) [1g]: wherein the secondarily-twisted yarn is coated with the adhesive, and

Tamura discloses that "the composite fiber fabric and/or the composite fiber cord [i.e., ***the secondarily-twisted yarn***] are immersed in ***adhesive***, dried, and heat-treated." EX1006, [0031] (emphasis added); EX1003, ¶¶99-100. According to Tamura, the "reinforcing layers, each of which is made of fiber fabric and/or fiber cord[,] [are] composed of aramid fibers and nylon fibers and ***coated on both sides with adhesive*** rubber." EX1006, [0030] (emphasis added).

(i) [1h]: the secondarily-twisted yarn coated with the adhesive has a strength retention rate of 80% or more after a disc fatigue test is performed according to JIS-L 1017 method of Japanese Standard Association, and has a dry heat shrinkage of 1.5-2.5%.

Tamura discloses embodiments wherein the secondarily-twisted yarn coated with the adhesive has ***a strength retention rate of 80% or more and a dry heat shrinkage of 1.5-2.5%***. EX1003, ¶¶101-105. As provided in TABLE 2 below, embodiment 1 of Tamura includes a strength retention rate of 90% and a dry heat shrinkage of 2.5%; and embodiment 2 includes a strength retention rate of 88% and a dry heat shrinkage of 2.4%. Note, to the extent that Patent Owner argues the prior art must disclose the entire claimed range, Federal Circuit precedent states otherwise. *See, e.g.*, *UCB, Inc. v. Actavis Labs. UT, Inc.*, 65 F.4th 679, 687 (Fed.

Cir. 2023) ("If the prior art discloses a point within the claimed range, the prior art anticipates the claim."); *Pfizer*, 94 F.4th at 1347 ("[W]here the general conditions of a claim are disclosed in the prior art, it is not inventive to discover the optimum or workable ranges by routine experimentation").

		Properties of heat-treated adhesive					
		Force (N/piece)	Elongation at breakage (%)	Dry heat shrinkage rate (%)	Strength (g/d)	Creep (%)	Strength retention rate after buckling (%)
Comparative Example	1	216	21.0	5.8	8.7	4.8	96
	2	216	17.7	6.1	7.3	1.9	87
Embodiment	1	325	10.5	2.5	12.0	0.5	90
	2	326	8.5	2.4	12.0	0.5	88
	3	328	10.0	2.6	12.1	0.6	91
	4	364	10.7	3.0	10.9	0.6	91
	5	390	11.5	3.2	9.9	1.0	90
	6	556	7.0	2.0	14.7	0.5	90

EX1006, TABLE 2 (excepted and color annotations added).

Tamura further explains that the disclosed strength retention rates were determined ***after a disc fatigue test is performed according to JIS-L 1017 method of Japanese Standard Association***, as claimed. Specifically, Tamura teaches that "[i]n accordance with JIS L 1017, tests were carried out on one fiber ... and the force ... [was] measured." EX1006, [0034]. According to Tamura, the force measured in

accordance with JIS L 1017 "was converted from N units to g units,"[3] and the strength (g/d) "was calculated by dividing [the force (in grams)] by the total denier number of the fiber cord."[4] EX1006, [0034].

$$Strength\ \left(\frac{g}{d}\right) = \frac{\left[Force\ \left(\frac{g}{piece}\right)\right]}{denier\ (\frac{d}{piece})}$$

Next, the reinforcing fiber fabric was subjected to a bending test, "the force was measured in the same manner" as described above, and the strength after bending was calculated. EX1006, [0035]. Finally, the ***strength retention rate*** was calculated by dividing the strength after bending by the strength before bending, multiplied by 100. EX1006, [0035].

$$\boldsymbol{Strength\ Retention\ Rate} = \frac{Strength\ after\ bending}{Strength\ before\ bending}\ x\ 100$$

[3] A POSITA would have known, as a matter of physics, that 1 Newton (N) is equal to 101.97 grams (g). EX1003, ¶103.

[4] A POSITA would have understood that "denier" and "decitex" are direct measures of linear density. EX1003, ¶103. Denier is grams per 9,000 meters of yarn, and decitex is grams per 10,000 meters of yarn. In other words, as Tamura provides, "0.9 d (denier) = 1.0 dx (decitex)." EX1006, [0034].

Thus, a POSITA would have understood that the strength retention rates disclosed in TABLE 2 of Tamura (including the strength retention rates for embodiments 1 and 2) were determined ***after a disc fatigue test is performed according to JIS-L 1017 method of Japanese Standard Association***, as claimed.

2. Claim 2: The hybrid fiber of claim 1, wherein weight ratio of the nylon primarily-twisted yarn to the aramid primarily-twisted yarn is 20:80 to 80:20.

Tamura discloses ***a hybrid fiber*** (i.e., aramid/nylon composite fiber) ***wherein the weight ratio of the nylon primarily-twisted yarn*** (i.e., nylon lower twisted fiber) ***to the aramid primarily-twisted yarn*** (i.e., aramid lower twisted fiber) is within the range of 20:80 to 80:20. EX1003, ¶¶106-111 Specifically, Tamura discloses a range of 20:80 to 65:35, and preferably 29:71 to 56:44. *See* EX1006, [0020] ("the ratio of the fineness of the aramid fiber to the fineness of the entire aramid/nylon composite fiber cord (fineness of the aramid fiber/total fineness of the entire composite fiber x 100 (%)) is usually 35-80%, and particularly preferably 44 to 71%."); EX1003, ¶108 (explaining that the fineness, also known as linear density, is weight per unit length). Further, TABLE 1 provides that in embodiments 1 and 2 the nylon-to-aramid weight ratio is 46.6:54.4, which falls within the claimed range.

Note, to the extent that Patent Owner argues the prior art must disclose the entire claimed range, Federal Circuit precedent states otherwise. *See, e.g.*, *UCB*, 65 F.4th at 687 ("If the prior art discloses a point within the claimed range, the prior art

anticipates the claim."); *Pfizer*, 94 F.4th at 1347 ("[W]here the general conditions of a claim are disclosed in the prior art, it is not inventive to discover the optimum or workable ranges by routine experimentation").

		Fiber material						Aramid fiber fineness ratio (%)	Total fineness (dt)
		Aramid fiber		N66		PET			
		(dt)	(piece)	(dt)	(piece)	(dt)	(piece)		
Comparative Example	1			1400	2			0	2800
	2					1670	2	0	3340
Embodiment	1	1670	1	1400	1			54.4	3070
	2	1670	1	1400	1			54.4	3070
	3	1670	1	1400	1			54.4	3070
	4	1670	1	2100	1			44.3	3770
	5	1670	1	1400	2			37.4	4470
	6	1670	2	940	1			78.0	4280

EX1006, TABLE 1 (excerpted and color annotations added).

A POSITA would have understood that "fineness" (also known as "linear density") is weight per unit length. EX1003, ¶110. For example, as Carbajal explains "[t]he linear density [i.e., fineness] of a yarn or fiber is determined by weighing a known length of yarn or fiber based on procedures described in ATSM D1907-97 and D885-98." EX1026 (US 7,968,475), 7:62-65. A POSITA would have further understood that "decitex" is direct measure of linear density (i.e., fineness).

"Decitex or 'dtex' [or 'dt'] is defined as the weight, in grams, of 10,000 meters of the yarn or fiber." *Id.*, 7:65-67; EX1003, ¶110.

Thus, in embodiments 1 and 2, the weight (per 10,000 m) of aramid fiber is 54.4% and nylon fiber is 45.6% of the total hybrid cord. *See* EX1006, TABLE 1 (annotated above).

$$\%\ weight\ per\ 10{,}000m\ (aramid) = \frac{linear\ density\ dt\ (aramid)}{linear\ density\ dt\ (total\ cord)}\ x\ 100$$

$$54.4\% = \frac{1670\ dt}{3070\ dt}\ x\ 100$$

$$\%\ weight\ per\ 10{,}000m\ (nylon) = \frac{linear\ density\ dt\ (nylon)}{linear\ density\ dt\ (total\ cord)}\ x\ 100$$

$$45.6\% = \frac{1400\ dt}{3070\ dt}\ x\ 100$$

See EX1006, TABLE 1; EX1003, ¶111.

3. Claim 4

(a) [4pre]: A method for manufacturing a hybrid fiber cord, the method comprising:

See supra §VIII.D.1(a) above regarding limitation [1pre]. EX1003, ¶112.

(b) [4a]: a first step for primarily-twisting a nylon filament at a first twist number of 300 to 500 TPM to produce a nylon primarily-twisted yarn;

See supra §VIII.D.1(b) above regarding limitation [1a]. EX1003, ¶113.

(c) [4b]: a second step for primarily-twisting an aramid filament at a second twist number 300 to 500 TPM to produce an aramid primarily-twisted yarn;

See supra §VIII.D.1(c) above regarding limitation [1b]. EX1003, ¶114.

(d) [4c]: a third step for secondarily-twisting the nylon and aramid primarily-twisted yarns together at a third twist number to produce a ply yarn in such a way that the nylon and aramid primarily-twisted yarns have identical structures with each other; and

See supra §VIII.D.1(f) above regarding limitation [1c]. EX1003, ¶115.

(e) [4d]: coating the ply yarn with an adhesive, and the ply yarn coated with the adhesive has a strength retention rate of 80% or more after a disc fatigue test is performed according to JIS-L 1017 method of Japanese Standard Association, and has a dry heat shrinkage of 1.5 to 2.5%,

See supra §VIII.D.1(h)-(i) above regarding limitation [1d]. EX1003, ¶116.

(f) [4e]: wherein the first, second, and third twist numbers are identical with each other, and

See supra §VIII.D.1(e)-(f) above regarding limitation [1e]. EX1003, ¶117.

(g) [4f]: wherein the third step produces a 2-ply secondarily-twisted yarn consisting of 1-ply of nylon primarily-twisted yarn and 1-ply of aramid primarily-twisted yarn.

See supra §VIII.D.1(g) above regarding limitation [1f]. EX1003, ¶118.

4. Claim 6: The method of claim 4, wherein the step of coating the ply yarn with an adhesive comprises: submerging the yarn into an adhesive solution; drying the ply yarn having the adhesive solution impregnated therein; and heat-treating the dried ply yarn.

Tamura discloses that "the composite fiber fabric and/or the composite fiber cord [i.e., ***the secondarily-twisted yarn***] are immersed in ***adhesive***, ***dried***, and ***heat-***

treated. EX1006, [0031] (emphasis added); EX1003, ¶¶119-120. Tamura explains that "a suitable method for adhesion and heat treatment is to immerse, dry, and heat-treat in an aqueous solution of an epoxy compound ... in the first bath ... then immerse, dry, and heat-treat in an RFL liquid (resorcinol-formalin-latex liquid) in the second bath in the same manner to attach the adhesive. EX1006, [0031].

5. Claim 7: The method of claim 6, wherein the adhesive solution comprises Resorcinol – Formaldehyde - Latex adhesive.

Tamura discloses that that "a suitable method for adhesion and heat treatment is to ... immerse, dry, and heat-treat in an RFL liquid (***resorcinol-formalin-latex*** liquid). EX1006, [0031] (emphasis added); EX1003, ¶¶121-122.

IX. GROUND 2: CLAIM 3 IS RENDERED OBVIOUS BY TAMURA IN VIEW OF BALDWIN OR BAEK AND FURTHER IN VIEW OF BARNES

A. Overview of Prior Art

1. Barnes (EX1009)

The application that published as Barnes was filed provisionally on November 9, 2007, and non-provisionally on October 28, 2008. Barnes (US 2009/0124149) published on May 14, 2009, and thus qualifies as prior art to the '731 patent under at least §102(b).

Barnes discloses and claims multi-filament yarns having high tenacity and low shrinkage and a method for making them. EX1009, Abstract; EX1003, ¶¶57-

58. Per Barnes, such yarns and fabrics are particularly useful for automobile airbag fabrics. *Id.* An aim of Barnes is to reduce yarn breaks, reflected by higher yarn tenacity at break and higher elongation a break measurements. *See id.*, [0006]. Barnes discloses various test methods in which the "[y]arn tenacity at break and elongation at break [were] measured according to ASTM D 885," *id.*, [0076], which is a standard testing method for tire cords, tire cord fabrics, and industrial filament yarns.

B. Motivation to Combine

A POSITA would have known that ASTM D885 was an established and widely-accepted international model standard test method for measuring breaking tenacity and elongation at break in tire cords. EX1003, ¶¶127-128. Thus, a POSITA would have been motivated to apply the well-known industry standard to perform the measurements required by Tamura.

Further, a POSITA would have understood Barnes' disclosure of the ASTM D885 standard to refer to the then-recent editions of it—for example, the September 2001, April 2002, November 2002, February 2003, ***October 2004***, June 2006, or July 2007 editions. EX1003, ¶128. And a POSITA would have known that the American Society for Testing and Material (ASTM) develops international consensus standards, including model standard test methods for tire cords. EX1003, ¶128. Thus, when combining the teachings of Tamura and Barnes, a POSITA would have

been motivated to use (or try) any one or more of these editions of the ASTM D885 standard, including ***the 2004 edition***, as claimed. EX1003, ¶128. To the extent Patent Owner argues otherwise, the measurement outcomes would have been the same regardless which edition was used because the 2001-2004 and 2006-2007 editions of the ASTM D 885 standard are substantially the same with respect to the breaking tenacity and elongation at break measurement methods. EX1003, ¶128 (*comparing* EX1027 - EX1032 (2001-2004 and 2006-2007 ASTM D 885 editions).

C. Reasonable Expectation of Success

A POSITA would have reasonably expected to successfully combine the teachings of Tamura with those of Barnes in the manner discussed above. *See supra* §IX.B; EX1003, ¶129. Barnes merely offers a measurement method (i.e., ASTM D 885 (2004)) for two physical properties of Tamura's reinforcement cord that Tamura already discloses having measured—i.e., the breaking tenacity and elongation at break. A POSITA would have understood that the combination does not require any modifications to Tamura's reinforcement cord; it requires only measuring the breaking tenacity and the elongation at break using the standard measurement method disclosed in Barnes. EX1003, ¶129.

D. Claim Analysis

1. Claim 3: The hybrid fiber of claim 1, wherein the hybrid fiber cord has breaking tenacity of 8.0 to 15.0 g/d and elongation at break of 7 to 15%, the breaking tenacity and

elongation at break being measured according to ASTM D885 (2004).

Tamura discloses embodiments wherein the hybrid fiber cord has a ***breaking tenacity of 8.0 to 15.0 g/d***. EX1003, ¶¶123-126. Specifically, the breaking tenacity is 12.0 g/d in embodiments 1 and 2, as provided in TABLE 2 below. A POSITA would have understood "strength" to be synonymous with breaking tenacity, which is the amount of force necessary to break the cord per unit of thickness. EX1003, ¶124.

		Properties of heat-treated adhesive			
		Force (N/piece)	Elongation at breakage (%)	Dry heat shrinkage rate (%)	Strength (g/d)
Comparative Example	1	216	21.0	5.8	8.7
	2	216	17.7	6.1	7.3
Embodiment	1	325	10.5	2.5	12.0
	2	326	8.5	2.4	12.0
	3	328	10.0	2.6	12.1
	4	364	10.7	3.0	10.9
	5	390	11.5	3.2	9.9
	6	556	7.0	2.0	14.7

EX1006, TABLE 2 (excerpted and color annotations added).

Tamura also discloses embodiments wherein the hybrid fiber cord has an elongation at break of 7 to 15%. Specifically, the elongation at break is 10.5% and 8.5% in embodiments 1 and 2, respectively, as provided in TABLE 2 below. Note,

to the extent that Patent Owner argues the prior art must disclose the entire claimed range, Federal Circuit precedent states otherwise. *See, e.g.*, *UCB*, 65 F.4th at 687 ("If the prior art discloses a point within the claimed range, the prior art anticipates the claim."); *Pfizer*, 94 F.4th at 1347 ("[W]here the general conditions of a claim are disclosed in the prior art, it is not inventive to discover the optimum or workable ranges by routine experimentation").

		Properties of heat-treated adhesive			
		Force (N/piece)	Elongation at breakage (%)	Dry heat shrinkage rate (%)	Strength (g/d)
Comparative Example	1	216	21.0	5.8	8.7
	2	216	17.7	6.1	7.3
Embodiment	1	325	10.5	2.5	12.0
	2	326	8.5	2.4	12.0
	3	328	10.0	2.6	12.1
	4	364	10.7	3.0	10.9
	5	390	11.5	3.2	9.9
	6	556	7.0	2.0	14.7

EX1006, TABLE 2 (excerpted and color annotations added).

Although Tamura does not expressly disclose that ***the breaking tenacity and elongation at break are measured according to ASTM D885 (2004)***—to the extent this purely functional limitation is even limiting—**Barnes** discloses that the

"tenacity at break and elongation at break are measured according to ASTM D 885." EX1009, [0076].[5]

X. GROUND 3: CLAIM 5 IS RENDERED OBVIOUS BY TAMURA IN VIEW BALDWIN OR BAEK AND FURTHER IN VIEW OF ROWAN AND/OR BUCHANAN

A. Overview of Prior Art

1. Rowan (EX1015)

The application that published as Rowan was provisionally filed on May 21, 2001, and non-provisionally filed on March 29, 2005. Rowan (US 2005/0249949) published on November 10, 2005, thus qualifies as prior art to the '731 patent under at least §102(b).

Rowan discloses "[a] method and system of manufacturing reinforcement materials for rubber products, particularly tires." EX1015, Abstract; EX1003, ¶¶71-73. With reference to FIG. 4, Rowan discloses a "one-machine cabled and treated cord unit ('OCT') 310," EX1015, [0045], which comprises a "direct cable subunit

[5] Elongation and tenacity measurement methods under JIS L 1017 (EX1036) are substantially the same as those in ASTM D 885 versions 2001-2004 and 2006-2007 and would result in substantially similar measurements. EX1003, ¶126 (comparing EX1036 to EX1027-EX1032 (2001-2004, 2006-2007 ASTM D 885 editions).

('DCU') 312," *id.*, [0046]. The machine can "combine the ply and twisting step into one operation." *Id.*, [0007]. "Yarns for producing a cable first may be processed through the DCU 312." *Id.*, [0047]. "Individual feed yarns 314 and 322 are cabled in the DCU 312." *Id.*, [0050]. The raw cabled cord 334 is forwarded to the treating subunit 328 where it is coated with an adhesion agent, such as a Resorcinal-Formaldehyde-Latex (RFL), and heated in heating unit 342. *See id.*, [0057]. "The OCT 310 cables and treats the cord in a continuous process." *Id.*, [0045]. And "[t]he treating subunit 328 may be constructed as part of the 312." *Id.* [0064].

2. Buchanan (EX1010)

The European application that published as Buchanan was filed on June 25, 1990, and published on February 1, 1991. Buchanan (EP 0405887) thus qualifies as prior art to the '731 patent under at least §102(b).

Buchanan discloses "a composite yarn (42) comprising at least two yarn bundles plied together in alternating s and z composite directions of twist." EX1010, Abstract; EX1003, ¶¶59-60. The twists are "simultaneously applied to twist the [yarn] strands [10] and ply the strands of each multi-stranded bundle [40] together." *Id.*, 1:36-39. "By the time the converged strands pass the twisting apparatus 32, a pair of twisted bundles 40 of strands is created." *Id.*, 3:45-47. The bundles 40 converge in the compression tube 38 and "ply together in a direction of twist ...

which is opposite to the bundle direction of twist," forming the composite yarn 42. *Id.*, 3:50-4:5.

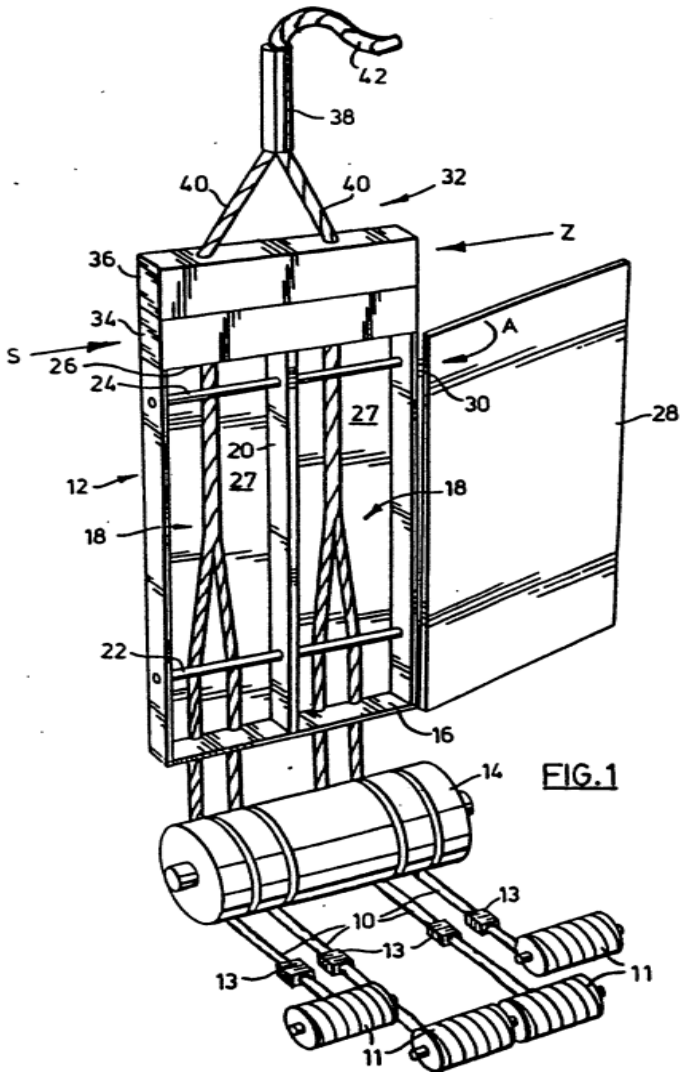

EX1010 (Buchanan), FIG. 1.

B. Motivation to Combine

A POSITA would have been motivated to perform the first, second, and third steps (disclosed in Tamura) continuously and simultaneously, as disclosed in Rowan and Buchanan, to create time and cost efficiencies. EX1003, ¶134. For example,

Rowan explains that "[t]hese machines combine the ply and twisting step into one operation, thus rendering the tire cord production process more efficient and cost effective." EX1015 (Rowan), [0007]. Doing such steps separately "involve[s] a number of individual steps and multiple transfers of product," which are "labor and cost intensive." *Id.*, [0006]. Another benefit is that a continuous process "produce[s] larger package sizes and improve quality by requiring fewer knows or splices in the final cord product." *Id*.

Other references also teach the benefits of using a continuous and simultaneous process. For example, Fritsch describes "a direct cabling machine" that can "operate at considerably higher speeds (30-50% greater) than conventional ring twisters," because they "complete the production of cabled cord in one step whereas ring twisters require two steps." Id., ¶23.

Similarly, Osborne discloses creating an aramid-nylon cord "made from two identical aramid yarns ... individually twisted ... in a first direction and from one yarn ... twisted ... in the same direction, these three yarns being further ***simultaneously*** twisted ... in the opposite direction." EX1011, [0075] (emphasis added); EX1003, ¶¶61-62.

Further, it would have been obvious to a POSITA to make multiple tire cords in a continuous manner based on his knowledge within the art. EX1003, ¶134. *See In re Dilnot*, 50 C.C.P.A. 1446, 1453 (CCPA 1963) ("It is, however, well within the

expected skill of a technician to operate a process continuously."); *NL Indus. v. Exploration Logging, Inc.*, No. 90-1040, 1990 U.S. App. LEXIS 16841, *7 (Fed. Cir. 1990) ("No technical modification would be necessary, because the same operation is just repeated. The evidence in the record supports the conclusion that repeating the comparing process would have been obvious to one of ordinary skill in the art.").

C. Reasonable Expectation of Success

A POSITA would have reasonably expected to successfully combine the teachings of Tamura with Rowan or Buchanan in the manner discussed above, *see supra* §X.B, because each reference teaches a reinforcement cord and a POSITA would have understood the modifications required by the combination to be mechanical and well within his knowledge and skill set. EX1003, ¶135. For example, combining the Z and S twisting steps into one process such that "the aramid and nylon yarns are continuously supplied and are primarily twisted (i.e., twisting the individual yarns) and then secondarily twisting (i.e., twisting the twisted aramid and nylon yarns together), such that in a given instant, primary and secondary twisting is occurring simultaneously," EX1002 (Reply to Office Action of December 29, 2016), 179, would require only mechanical modifications to the equipment used to manufacture the reinforcement cords of Tamura. EX1003, ¶135.

D. Claim Analysis

1. Claim 5: The method of claim 4, wherein the first, second and third steps are performed simultaneously and continuously.

Tamura discloses performing the first, second, and third steps, *see supra* §VIII.D.1, but does not explicitly provide that the three steps are performed simultaneously and continuously. EX1003, ¶¶130-133. During prosecution, Applicant argued that the '731 patent's disclosure taught "a continuous-type process, where the aramid and nylon yarns are continuously supplied and are primarily twisted (i.e., twisting the individual yarns) and then secondarily twisting (i.e., twisting the twisted aramid and nylon yarns together), such that in a given instant, primary and secondary twisting is occurring simultaneously." EX1002 (Reply to Office Action of December 29, 2016), 179.

Rowan and Buchanan each teaches this limitation. Specifically, Rowan discloses that "[w]ith some conventional methods of tire cord manufacturing, ... a ring twist machine [ ] produce[s] a cable in two steps, commonly known as the 'ring twist process.'" EX1015, [0028]. "The yarn is twisted into a ply" and "thereafter, the ply is ... twisted into a cable of two or more plies with twisting equipment." *Id.* Because "this two-step ring twist process is laborious and expensive," *id.*, [0029], Rowan teaches "machines [that] combine the ply and twisting step into one

operation, thus rendering the tire cord production process more efficient and cost effective." EX1015, [0007], [0039].[6]

With reference to FIG. 4, Rowan discloses a "one-machine cabled and treated cord unit ('OCT') 310," EX1015, [0045], which comprises a "direct cable subunit ('DCU') 312," *id.*, [0046]. "Yarns for producing a cable first may be processed through the DCU 312." *Id.*, [0047]. "Individual feed yarns 314 and 322 are cabled in the DCU 312." *Id.*, [0050]. The machine can "combine the ply and twisting step into one operation." *Id.*, [0007]. The raw cabled cord 334 is forwarded to the treating subunit 328 where it is coated with an adhesion agent, such as a Resorcinal-Formaldehyde-Latex (RFL), and heated in heating unit 342. *See id.*, [0057]. "The OCT 310 cables and treats the cord in a ***continuous process***." *Id.*, [0045] (emphasis added). And "[t]he treating subunit 328 may be constructed as part of the 312." *Id.* [0064].

---

[6] As used in Rowan, the term "'ply' means a twisted single yarn," and "'twisting' means the number of turn about its axis per unit of length of yarn or other textile strand." EX1015, [0028]. Further, in Rowan, "a 'cable' or a 'cord' means a product formed by twisting together two or more plied yarns." EX1015, [0029].

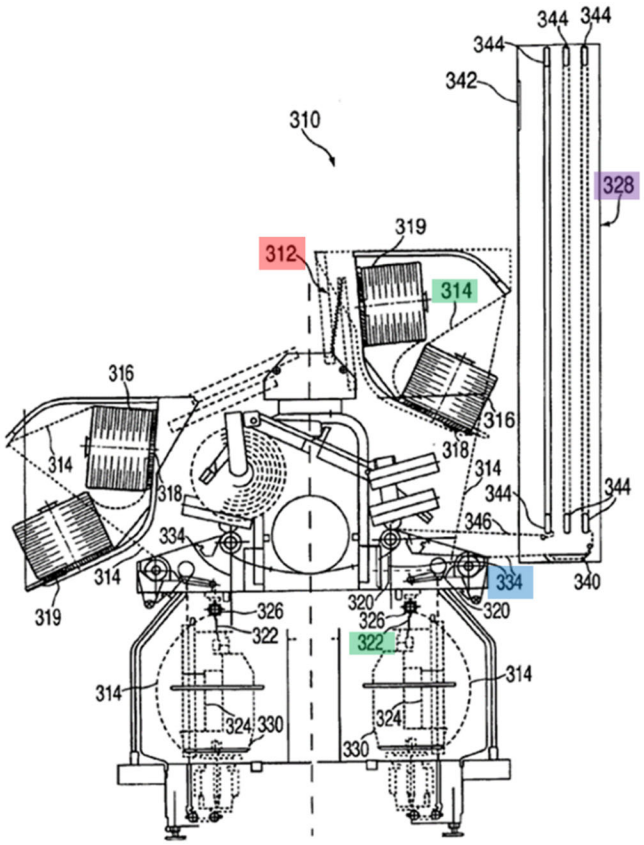

FIG. 4

EX1015, FIG. 4 (color annotations added).

Moreover, to the extent Patent Owner asserts that Rowan's Figures 4 and 5 do not depict the primary twisting (even though such primary twisting is described in Rowan's specification), a POSITA would have considered it obvious for a single apparatus to continuously and simultaneously perform such primary twisting in view of Buchanan's teachings discussed below. A POSITA would understand that simultaneity in the primary twisting of the yarns is needed in order that they are ready to be secondarily twisted to form a cord in Rowan's continuous process that lacks "intermediate take-up." *Id.*; Ex. 1007, Abstract. If the yarns are not twisted at

the same time, then the apparatus could not "treat[] the cord in a continuous process without intermediate take-up" as required by Rowan. Ex. 1007, [0011].

Buchanan discloses "a method of plying yarns to obtain a composite yarn." EX1010, 1:28-30. Per Buchannan, twists are "simultaneously applied to twist the [yarn] strands [10] and ply the strands of each multi-stranded bundle [40] together." *Id.*, 1:36-39. "By the time the converged strands pass the twisting apparatus 32, a pair of twisted bundles 40 of strands is created." *Id.*, 3:45-47. The bundles 40 converge in the compression tube 38 and "ply together in a direction of twist ... which is opposite to the bundle direction of twist," forming the composite yarn 42. *Id.*, 3:50-4:5.

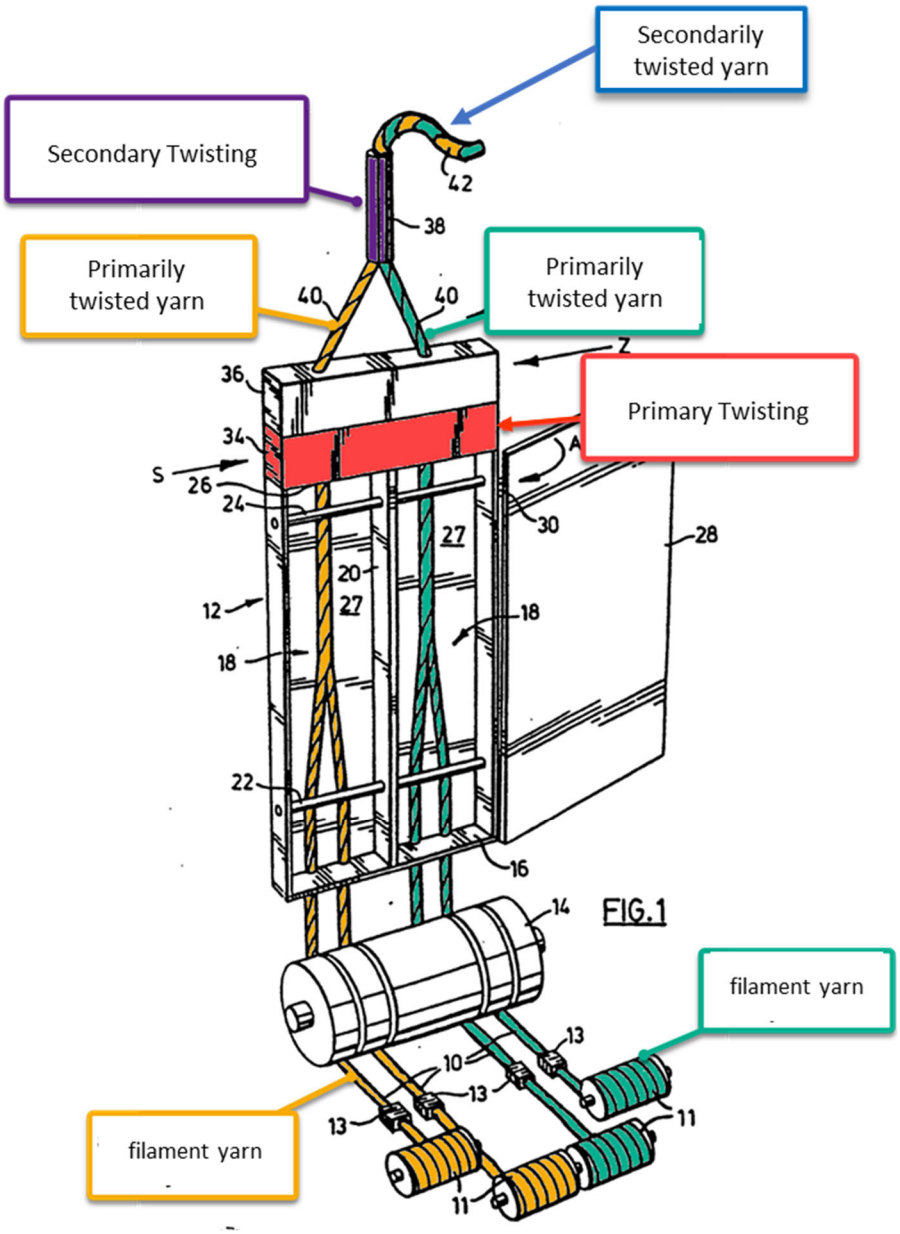

EX1010 (Buchanan), FIG. 1 (color annotations added).

XI. GROUND 4: CLAIMS 1-4 AND 6-7 ARE RENDERED OBVIOUS BY CHUNG IN VIEW OF HARIKAE AND FURTHER IN VIEW OF YOKOKURA

A. Overview of Prior Art

1. Chung (EX1012)

The Korean application that published as Chung was filed on June 3, 2005, and published on December 7, 2006. Chung (KR 10-2006-0126101) thus qualifies as prior art to the '731 patent under at least §102(b).

Chung discloses and claims "a hybrid tire cord including nylon filaments and aramid filaments, which have excellent physical properties and reduced production costs and can be applied to ultra-high performance tires, and a method for manufacturing the same." EX1012, 3; EX1003, ¶¶63-65. According to Chung, one method of making the hybrid tire cord includes "a) combining nylon filaments and aramid filaments and then twisting them to produce a z-twisted yarn; b) twisting 2 to 3 strands of the z-twisted yarn to produce an s-twisted yarn; c) immersing the s-twisted yarn in an adhesive solution and then drying and heat-treating it." EX1012, claim 8.

2. Harikae (EX1013)

The Japanese application that published as Harikae was filed on February 15, 2006, and published on August 30, 2007. Harikae (JP 2007-216778) thus qualifies as prior art to the '731 patent under at least §102(b).

Harikae discloses and claims a radial tire with an organic fiber reinforced cover layer 7, "the organic fiber reinforced cover layer being made up of a center cover layer 71 and a shoulder cover layer 72." EX1001, Abstract; EX1003, ¶¶66-67.

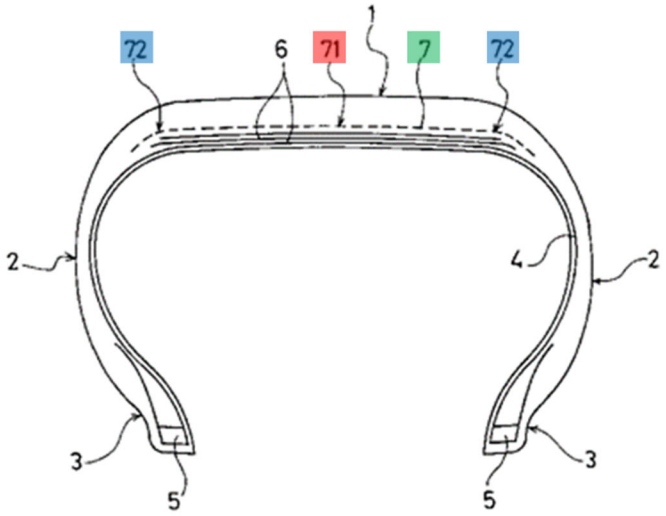

EX1013, FIG. 1 (color annotations added). The center cover layer 71 is a three-ply hybrid cord composed of two aramid filament yarns and one nylon filament yarn; the shoulder cover layer 72 is a two-ply hybrid cord made of aramid fiber and nylon fiber.

3. Yokokura (EX1014)

The PCT application that published as Yokokura was filed on June 9, 2009, and published on March 25, 2010. Yokokura (US 2010/0071826) thus qualifies as prior art under at least §102(b).

Yokokura discloses a "tire having a reduced weight and improved durability" and a "belt-reinforcement layer [that] is constituted of reinforcing cords being para-aramid cords." EX1014, Abstract; EX1003, ¶¶68-70. Yokokura's tire 10 has left and right annular bead portions 11, left and right side walls 12 connected to the bead portions, a tread 13 provided between the side walls, a reinforcing carcass layer 2 composed of at least one toroidal carcass ply extending between the bead portions, and a reinforcing belt layer 3 composed of two or more belt plies 3a, 3b arranged on the outer periphery of crown of the carcass layer 2. EX1014, [0037].

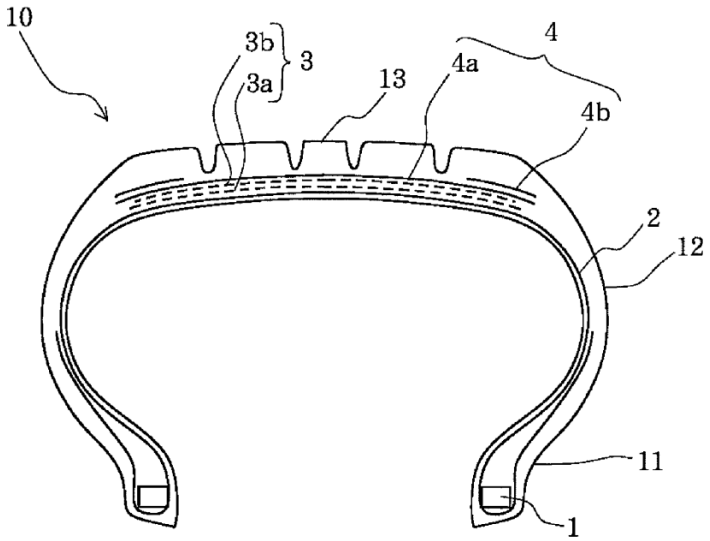

EX1014, FIG. 1.

B. Motivation to Combine

A POSITA would have been motivated to combine the teachings of Chung with Harikae and Yokokura, as detailed below. *Infra* §XI.D. EX1003, ¶¶136-139.

First, Chung, Harikae, and Yokokura are analogous to the challenged patent and to each other. Chung, Harikae, Yokokura, and the challenged patent are all (i) within the same field of endeavor (i.e., tire reinforcement cords and/or method for making the same) and (ii) reasonably pertinent to the same problem facing the inventors of the '731 patent (i.e., optimizing the performance and physical properties of nylon-aramid hybrid reinforcement cords). *See, e.g.*, EX1001, 2:55-61 (aiming "to provide a method for easily manufacturing a hybrid fiber cord comprising a nylon filament and an aramid filament, which has more uniform physical properties and better strength and fatigue resistance"); EX1012 (aiming "to provide a hybrid tire cord ... having excellent shrinkage force ... [and] high modulus characteristics"); EX1013, [0024] (aim "to provide a single hybrid twisted cord with a good balance of cord properties such as rigidity, fatigue resistance under compression, heat generation properties, and heat shrinkage properties"); EX1014 (Yokokura), [0023] ("provides a pneumatic tire containing a belt-reinforcement layer in the cap/layer structure described above that has high strength, a low modulus of elasticity, and excellent resistance to fatigue, in particular, excellent durability in high-speed driving."); *supra* §§XI.A.

Second, to the extent that Patent Owner argues that Chung does not teach that the nylon filament, aramid filament, and hybrid nylon-aramid cord have the same twist number, Harikae provides the teaching, and a POSITA would have been

motivated to modify Chung's cord to have the same twist number as each individual nylon and aramid filament, as disclosed in Harikae. EX1003, ¶138. As Chung explains, "because each s-twisted yarn has the same physical properties, twisting defects do not occur" and "[a]s a result, the properties of the final hybrid tire cord, such as strength and modulus, are greatly improved, and productivity is increased because twisting defects rarely occur." EX1012, 6; EX1003, ¶138. In addition, Kerawalla explains that "[a]s is well known in the art, the ends [(i.e., individual plies)] should be approximately equal in size in order to obtain a balanced cord." EX1016 (US 3977172), 1:41-43. Kerawalla also explains that "[e]ach of the plies is twisted in the same direction and the combined ends are ***twisted approximately the same amount*** in the opposite direction." *Id.*, 1:43-45 (emphasis added). According to Kerawalla, this process creates a "cabled yarn that exhibits a modest shrinkage adequate to prevent wavy cord and loose bead turn-ups in bias type tires." *Id.*, 1:49-52.

Third, to the extent Patent Owner argues that Chung does not teach that the secondarily-twisted (i.e., s-twisted) yarn has a strength retention rate of 80% or more after a disc fatigue test is performed according to JIS-L 1017 method of Japanese Standard Association, Yokokura discloses this limitation, and a POSITA would have been motivated to modify the cord of Chung and Harikae in view of Yokokura. As Yokokura explains, "[t]he higher the retention ratio is[,] the better the test result is."

EX1014, [0082]. In addition, according to Kwon, if the strength retention rate of a tire cord does not exceed 90%, "the ability to support the tire is reduced due to deterioration of physical properties during driving, resulting in deterioration of driving performance and, in severe cases, tire rupture." EX1021, [139].

C. Reasonable Expectation of Success

A POSITA would have reasonably expected to be able to successfully combine the teachings of Chung, Harikae, and Yokokura in the manner described above. *See supra* §XI.B; EX1003, ¶140. Chung, Harikae, and Yokokura are each related to a reinforcement cord, and a POSITA would have understood the modifications required by the combination to be mechanical and well within his knowledge and skill set. EX1003, ¶140. For example, twisting the nylon filament, aramid filament, and hybrid cord the same number of times, as disclosed in Chung and Harikae would require mere mechanical modifications to the equipment used to manufacture the reinforcement cords of Chung in view of Harikae. EX1003, ¶140.

In addition, performing a disc fatigue test (i.e., driving test on a drum) is according to the JIS-L 1017 method of Japanese Standard Association to measure a strength retention rate is old and well known within the art. EX1003, ¶141. Further, the disk fatigue test process set forth in JIS-L 1017 is well within the skill set of an POSITA. EX1003, ¶141. Finally, achieving a strength retention rate of 80% or more would have been a matter of routine optimization, using standard procedures,

rendering predictable results. EX1003, ¶141. Indeed, a POSITA would have considered a high strength retention rate to be optimal, and would have tried to attain it via routine experimentation. EX1003, ¶141; EX1014, [0082] ("[t]he higher the retention ratio is[,] the better the test result is"); EX1021, [139] (disclosing that if the strength retention rate of a tire cord does not exceed 90%, "the ability to support the tire is reduced due to deterioration of physical properties during driving, resulting in deterioration of driving performance and, in severe cases, tire rupture").

D. Claim-by-Claim Analysis

1. Claim 1:

(a) [1pre]

To the extent the preamble is limiting, Chung discloses a "***hybrid tire cord*** and a method for manufacturing the same, and more particularly, to a hybrid tire cord in which nylon filaments and aramid filaments are combined." EX1012, Abstract. EX1003, ¶¶142-143. A POSITA would have understood a "tire cord in which nylon filaments and aramid filaments are combined" to be a ***fiber*** cord. EX1003, ¶143. As Chung teaches, "[a]ramid filaments ... are mainly used as ***fibers***." EX1012, 4 (emphasis added). Chung likewise teaches that the aramid-nylon hybrid tire cord is made with a strong bond between the ***fibers***. *See* EX1012, 5 ("The extension of the fibers that occurs during this twisting process combines with the tension of the fibers to increase the pressure in the inward direction of the fibers,

thereby increasing the friction between the fibers, and thus making it possible to manufacture a hybrid tire cord with a strong bond between the fibers.”).

(b) [1a]

Chung discloses a nylon primarily-twisted yarn having a first twist number of 300 to 500 TPM. EX1003, ¶¶144-145. Specifically, Chung teaches that “when the total fineness of the nylon filament is 840 denier, the appropriate twist count is 470 TPM (Twist Per Meter), and when it is 1890 denier, the appropriate twist count is 300 TPM. Therefore, ***the hybrid tire cord according to the present invention has a twist count in the range of 300 to 500 TPM***.” EX1012, 5 (emphasis added).

(c) [1b]

Chung discloses an aramid primarily-twisted yarn having a first twist number of 300 to 500 TPM. EX1003, ¶¶146-151. Specifically, Chung teaches that “since the two types of filaments have similar structures, the twist count of the hybrid tire cord follows the fineness of nylon” and “it is desirable that the fineness of the aramid filament also has the same or similar range as that of the nylon filament.” EX1012, 5.

However, to the extent Patent Owner contends that Chung does not expressly teach that the aramid primarily twisted yarn has a twist number between 300 and 500 TPM, Harikae provides this teaching.

Harikae discloses a pneumatic radial tire (FIG. 1) with a tread portion 1 and a carcass layer 4. EX1013, [0020]. The outer circumferential side of the carcass layer 4 includes an organic fiber reinforcing layer 7 composed of a center cover layer 71 and a shoulder cover layer 72. EX1013, [0021]-[0022].

[FIG. 1]

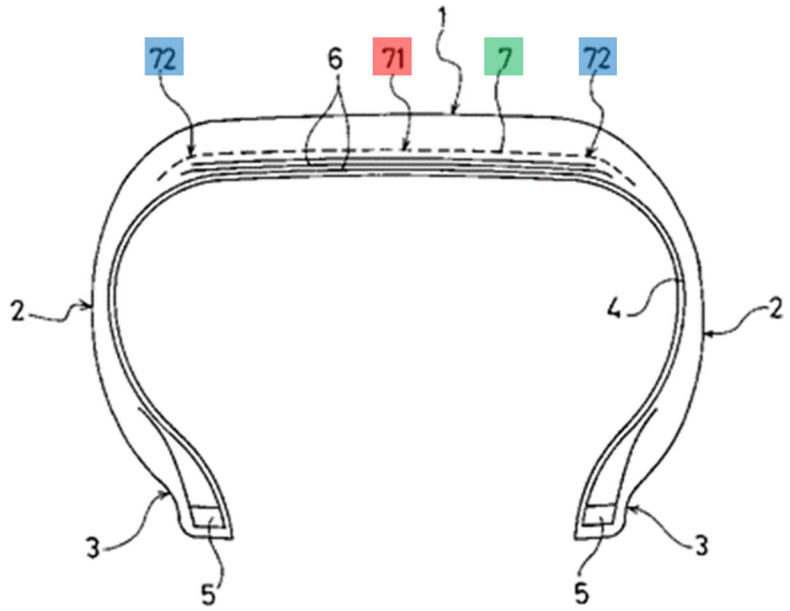

EX1013, FIG 1 (color annotations added). According to Harikae, "the shoulder cover layer 72 is constructed using a two-ply composite cord formed by twisting together one high elasticity yarn and one low elasticity yarn that are each twisted in the same direction." EX1013, [0023]. Specifically, the shoulder cover layer 72 is made of B: "A two-ply hybrid cord made of aramid fiber 1670 dtex yarn and nylon 66 fiber 1400 dtex yarn." EX1013, [0039]. Per Harikae the nylon and aramid fibers in the two-ply hybrid cord of the shoulder cover layer 72 each have a twist number within the range of 300-500 TPM, with specific embodiments disclosing 300 TPM

(Embodiment 9), 380 TPM (Embodiments 4-7 and 10), and 410 TPM (Embodiment 11):

[Table 2]

	Embodiment 4	Embodiment 5	Embodiment 6	Embodiment 7	Embodiment 8	Embodiment 9	Embodiment 10	Embodiment 11
Center cover layer								
Cord structure (yarn combination)	A	A	A	A	A	A	A	A
Total fineness (dtex)	4740	4740	4740	4740	4740	4740	4740	4740
High modulus yarn twist count (twists/10cm)	22	25	31	34	28	28	28	28
Low modulus yarn twist count (twists/10cm)	22	25	31	34	28	28	28	28
Number of twists (twists/10cm)	22	25	31	34	28	28	28	28
Upper twist factor	1515	1721	2134	2341	1928	1928	1928	1928
Driving density (lines / 50 mm)	45	45	45	45	45	45	45	45
Code diameter (mm)	0.9	0.9	0.9	0.9	0.9	0.9	0.9	0.9
Ply gauge (mm)	1.4	1.4	1.4	1.4	1.4	1.4	1.4	1.4
Shoulder cover layer								
Cord structure (yarn combination)	B	B	B	B	B	B	B	B
Total fineness (dtex)	3070	3070	3070	3070	3070	3070	3070	3070
High modulus yarn twist count (twists/10cm)	38	38	38	38	27	30	38	41
Low modulus yarn twist count (twists/10cm)	38	38	38	38	27	30	38	41
Number of twists (twists/10cm)	38	38	38	38	27	30	38	41

EX1013, TABLE 2 (excerpted and color annotations added) (note: 1 twist per 10cm = 10 twists per meter (TPM)).

A POSITA would have been motivated to combine the teachings of Chung and Harikae to construct the nylon/hybrid cord such that aramid fiber has a twist number that falls within the range of 300 to 500 TPM, like the nylon fiber. A POSITA would have understood that "the level of twisting is one of the crucial points for hybrid cord property optimization." EX1033 (Yilmaz), 185. And, as Chung explains, "because each s-twisted yarn has the same physical properties, twisting defects do not occur" and "[a]s a result, the properties of the final hybrid tire cord, such as strength and modulus, are greatly improved, and productivity is increased because twisting defects rarely occur." EX1012, 6.

Further, a POSITA would have appreciated that the lower the twist number for aramid filaments, the lower the elongation at break, which reduces the fatigue resistance of the tire cord; and the higher the twist number, the lower the strength of the tire cord. EX1003, ¶151; EX1012, 5 ("In general, as the twist count of fibers increases, the strength decreases but the fatigue performance increases, and conversely, as the twist count decreases, the strength increases but the fatigue performance decreases."); EX1021, [121] ("If the [ ] twist count is less than [200 TPM], the breaking strength of the cabled yarn is high, but the elongation at break is low, which reduces the fatigue resistance of the tire cord."). "On the other hand, if the [ ] twist count exceeds [600 TPM] the strength of the tire cord is excessively reduced." EX1021, [121]. A POSITA would have been motivated to choose the range of 300-500 TPM because it falls outside of the problematic lower (200 TPM and lower) and upper (600 TPM and higher) boundaries disclosed in Kwon. EX1003, ¶151.

(d) [1c]

Chung discloses "immersing the s-twisted yarn in an adhesive solution." EX1012, 4; EX1003, ¶¶152-153. According to Chung, "[t]he adhesive solution used as the above adhesive is not particularly limited in the present invention, and an RFL solution (Resorcinol Formaldehyde Latex), which is an impregnation solution for

tire cords commonly used in this field, or an epoxy-based adhesive composition solution, etc. can be used." EX1012, 6.

(e) [1d]

Chung discloses that the first and second twist number are identical. EX1003, ¶¶154-158. Specifically, Chung teaches that "since the two types of filaments have similar structures, the twist count of the hybrid tire cord follows the fineness of nylon" and "it is desirable that the fineness of the aramid filament also has the same or similar range as that of the nylon filament." EX1012, 5.

However, to the extent Patent Owner contends that Chung does not expressly teach that the nylon yarn and aramid yarn have the same twist number, Harikae provides this teaching. Per Harikae the nylon and aramid fibers in the two-ply hybrid cord of the shoulder cover layer 72 have the same twist number: 300 TPM (Embodiment 9), 380 TPM (Embodiments 4-7 and 10), and 410 TPM (Embodiment 11):

[Table 2]

	Embodiment 4	Embodiment 5	Embodiment 6	Embodiment 7	Embodiment 8	Embodiment 9	Embodiment 10	Embodiment 11
Center cover layer								
Cord structure (yarn combination)	A	A	A	A	A	A	A	A
Total fineness (dtex)	4740	4740	4740	4740	4740	4740	4740	4740
High modulus yarn twist count (twists/10cm)	22	25	31	34	28	28	28	28
Low modulus yarn twist count (twists/10cm)	22	25	31	34	28	28	28	28
Number of twists (twists/10cm)	22	25	31	34	28	28	28	28
Upper twist factor	1515	1721	2134	2341	1928	1928	1928	1928
Driving density (lines / 50 mm)	45	45	45	45	45	45	45	45
Code diameter (mm)	0.9	0.9	0.9	0.9	0.9	0.9	0.9	0.9
Ply gauge (mm)	1.4	1.4	1.4	1.4	1.4	1.4	1.4	1.4
Shoulder cover layer								
Cord structure (yarn combination)	B	B	B	B	B	B	B	B
Total fineness (dtex)	3070	3070	3070	3070	3070	3070	3070	3070
High modulus yarn twist count (twists/10cm)	38	38	38	38	27	30	38	41
Low modulus yarn twist count (twists/10cm)	38	38	38	38	27	30	38	41
Number of twists (twists/10cm)	38	38	38	38	27	30	38	41

EX1012, TABLE 2 (excerpted and color annotations added) (note: 1 twist per 10cm = 10 twists per meter (TPM)).

A POSITA would have been motivated to combine the teachings of Chung and Harikae such that the nylon filament and aramid filament have the same twist number, as Chung explains, "because each s-twisted yarn has the same physical properties, twisting defects do not occur" and "[a]s a result, the properties of the final hybrid tire cord, such as strength and modulus, are greatly improved, and productivity is increased because twisting defects rarely occur." EX1012, 6; EX1003, ¶162.

In addition, Kerawalla explains that "[a]s is well known in the art, the ends [(i.e., individual plies)] should be approximately equal in size in order to obtain a balanced cord." EX1016, 1:41-43. Kerawalla also explains that "[e]ach of the plies is twisted in the same direction and the combined ends are ***twisted approximately***

the same amount in the opposite direction." *Id.*, 1:43-45 (emphasis added). According to Kerawalla, this process creates a "cabled yarn that exhibits a modest shrinkage adequate to prevent wavy cord and loose bead turn-ups in bias type tires." *Id.*, 1:49-52.

(f) [1e]

Chung discloses that the nylon primarily-twisted yarn (i.e., nylon z-twisted yarn) and the aramid primarily-twisted yarn (i.e., aramid z-twisted yarn) are secondarily-twisted (s-twisted) together at a third twist number which is identical with the first and second twist numbers. EX1003, ¶¶159-165. Specifically, Chung teaches that "[s]ince the hybrid tire cord of the present invention has similar strength and fatigue performance according to twisting since the two types of filaments have similar structures, the twist count of the hybrid tire cord follows the fineness of nylon." EX1012, 5. For example, when the total fineness of the nylon filament is 840 denier, the appropriate twist count is 470 TPM (Twist Per Meter), and when it is 1890 denier, the appropriate twist count is 300 TPM. *See id*. ***Therefore, the hybrid tire cord according to the present invention has a twist count in the range of 300 to 500 TPM***. At this time, "it is desirable that the fineness of the aramid filament also has the same or similar range as that of the nylon filament." *Id.*

As explained above, to the extent that Patent Owner argues that Chung does not expressly teach that the primarily-twisted yarns have the same twist number as

the secondarily-twisted yarn, Harikae discloses this limitation. According to Harikae, the nylon and aramid fibers in the two-ply hybrid cord of the shoulder cover layer 72 have the same twist number as the two-ply hybrid cord: 300 TPM (Embodiment 9), 380 TPM (Embodiments 4-7 and 10), and 410 TPM (Embodiment 11):

[Table 2]

	Embodiment 4	Embodiment 5	Embodiment 6	Embodiment 7	Embodiment 8	Embodiment 9	Embodiment 10	Embodiment 11
Center cover layer								
Cord structure (yarn combination)	A	A	A	A	A	A	A	A
Total fineness (dtex)	4740	4740	4740	4740	4740	4740	4740	4740
High modulus yarn twist count (twists/10cm)	22	25	31	34	28	28	28	28
Low modulus yarn twist count (twists/10cm)	22	25	31	34	28	28	28	28
Number of twists (twists/10cm)	22	25	31	34	28	28	28	28
Upper twist factor	1515	1721	2134	2341	1928	1928	1928	1928
Driving density (lines / 50 mm)	45	45	45	45	45	45	45	45
Code diameter (mm)	0.9	0.9	0.9	0.9	0.9	0.9	0.9	0.9
Ply gauge (mm)	1.4	1.4	1.4	1.4	1.4	1.4	1.4	1.4
Shoulder cover layer								
Cord structure (yarn combination)	B	B	B	B	B	B	B	B
Total fineness (dtex)	3070	3070	3070	3070	3070	3070	3070	3070
High modulus yarn twist count (twists/10cm)	38	38	38	38	27	30	38	41
Low modulus yarn twist count (twists/10cm)	38	38	38	38	27	30	38	41
Number of twists (twists/10cm)	38	38	38	38	27	30	38	41

EX1012, TABLE 2 (excerpted and color annotations added) (note: 1 twist per 10cm = 10 twists per meter (TPM)).

A POSITA would have been motivated to combine the teachings of Chung and Harikae such that the nylon filament (z-twist), aramid filament (z-twist), and hybrid cord (s-twist) have the same twist number, as Chung explains, "because each s-twisted yarn has the same physical properties, twisting defects do not occur" and "[a]s a result, the properties of the final hybrid tire cord, such as strength and modulus, are greatly improved, and productivity is increased because twisting defects rarely occur." EX1012, p.6; EX1003, ¶162.

Kerawalla explains that "[a]s is well known in the art, the ends [(i.e., individual plies)] should be approximately equal in size in order to obtain a balanced cord." EX1016, 1:41-43. Kerawalla also explains that "[e]ach of the plies is twisted in the same direction and the combined ends are ***twisted approximately the same amount*** in the opposite direction." *Id.*, 1:43-45 (emphasis added). According to Kerawalla, this process creates a "cabled yarn that exhibits a modest shrinkage adequate to prevent wavy cord and loose bead turn-ups in bias type tires." *Id.*, 1:49-52.

- ***nylon primarily-twisted yarn and the aramid primarily-twisted yarn ... have identical structures with each other in the hybrid fiber***

Chung discloses that "the two types of filaments have ***similar*** structures." EX1012, 5 (emphasis added). Although the challenged claims requires "***identical*** structures," under Patent Owner's interpretation of the term "identical structures," Chung alone or in view of Harikae discloses this limitation. In its district court complaint (EX1025 (Third Amended Complaint for Patent Infringement), ¶ 158), Patent Owner alleged that the accused product satisfies the "identical structures" limitation because the manufacture process includes "a third step for secondarily-twisting the nylon and aramid primarily-twisted yarns together at a third twist number ***to produce a ply yarn in such a way that the nylon and aramid primarily-twisted yarns have identical structures with each other***. EX1025, ¶ 158 (emphasis

added). As explained above, Chung alone or combined with Harikae likewise discloses a third step for secondarily-twisting the nylon and aramid primarily-twisted yarns together at a third twist number that is identical to the first and second twist number. Thus, Chung alone or in view of Harikae discloses the "identical structures" limitation, at least under Patent Owner's treatment of the term in its district court complaint.

Moreover, due to the nature of textiles, a POSITA considering Chung would not have drawn a substantive distinction between "similar structures" and "identical structures." EX1003, ¶165. Textiles (e.g., fibers, filaments, yarn, etc.), like most natural or synthetic materials, are not an exact science. *Id.*, ¶165. Thus, a POSITA at the time of the '731 patent would have understood that no two textiles are 100 percent identical due to the inherent nature of the materials. *Id.*, ¶165. For example, even the '731 patent itself acknowledges that the nylon and aramid primarily-twisted yarns "have structures ***substantially identical*** with each other as illustrated in FIG. 2." EX1001, 7:34-39 (emphasis added).

(g) [1f]

Chung discloses that ***1-ply nylon primarily-twisted yarn*** (i.e., nylon z-twisted yarn) and ***1-ply aramid primarily-twisted yarn*** (i.e., aramid z-twisted yarn) ***form a 2-ply secondarily-twisted hybrid nylon-aramid yarn*** (i.e., s-twisted yarn). EX1003, ¶¶166-168. Specifically, Chung discloses that at least in comparative examples 3

and 4, "[a] tire cord was manufactured ... [such] that nylon 66 and p-aramid filaments ... were subject to a twisting process to manufacture nylon 66 z-twisted yarn and p-aramid z-twisted yarn, and then a combining process was performed." EX1012, 7. Chung discloses that although "preferably, the nylon filaments and the aramid filament are double- or triple-***plied***," the z-twisted nylon yarn and z-twisted aramid yarn are each a "strand," *id.* at 4, which a POSITA would understand to have 1-ply. EX1003, ¶167.

In the context of tires, a POSITA would have understood that the term "ply" is a term of art that can refer to a single yarn. EX1003, ¶168. For example, Rowan provides "'ply' means a twisted single yarn." EX1015. Accordingly, a POSITA would have understood that a twisted fiber is 1-ply, and a twisted fiber cord made of two 1-ply fibers is a 2-ply cord. EX1003, ¶168.

(h) [1g]

Chung discloses that ***the secondarily-twisted yarn*** (i.e., s-twisted yarn) ***is coated with the adhesive***. EX1003, ¶¶169-170. At least claim 9 of Chung recites: "A method for manufacturing a hybrid tire cord, comprising the steps of a) twisting nylon filaments and aramid filaments to produce a z-twisted yarn; b) combining 2 to 3 strands of the z-twisted yarn to produce an s-twisted yarn; c) ***immersing the s-twisted yarn in an adhesive*** solution and then drying and heat-treating it." EX1019, 2 (emphasis added). This method is also illustrated in Drawing 2 of Chung.

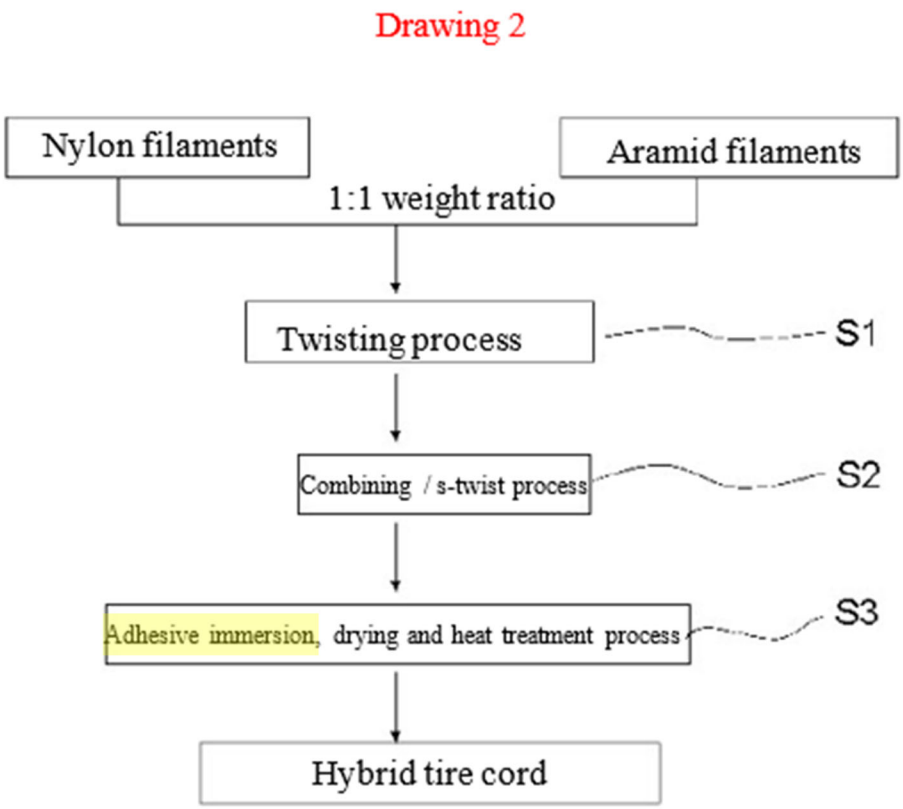

EX1012, Drawing 2 (color annotation added).

(i) [1h]

Chung discloses a secondarily-twisted (i.e., s-twisted) yarn coated with the adhesive has "a dry heat shrinkage of 2.0 to 5.0%." EX1012,, 4, 6; EX1003, ¶¶171-177. Thus, Chung teaches dry heat shrinkages (2.0-2.5%) that fall within the claimed range. *In re Wertheim*, 541 F.2d 257, 267 (CCPA 1976) ("Of course, the disclosure in the prior art of any value within a claimed range is an anticipation of the claimed range."); *Ormco Corp. v. Align Tech., Inc.*, 463 F.3d 1299, 1311 (Fed. Cir 2006) ("Where a claimed range overlaps with a range disclosed in the prior art, there is a presumption of obviousness," which only "can be rebutted if it can be

shown that the prior art teaches away from the claimed range, or the claimed range produces new and unexpected results.”).

Further, embodiment 1 of Chung discloses a dry heat shrinkage of 2.6%, which is so close that prima facie one skilled in the art would have expected the cord to have the same properties as cords with dry heat shrinkages falling within the 1.5-2.5% range. *Titanium Metals Corp. v. Banner*, 778 F.2d 775, 783 (Fed. Cir. 1985) (upholding a rejection of a claim directed to an alloy having 0.8% nickel, 0.3% molybdenum as obvious over a reference disclosing alloys of 0.75% nickel, 0.25% molybdenum, 0.94% nickel, and 0.31% molybdenum because “[t]he proportions are so close that prima facie one skilled in the art would have expected them to have the same properties.”).

To the extent Patent Owner argues that Chung does not teach that the secondarily-twisted (i.e., s-twisted) yarn has a strength retention rate of 80% or more after a disc fatigue test is performed according to JIS-L 1017 method of Japanese Standard Association, Yokokura discloses this limitation.

Yokokura teaches a “tire having a reduced weight and improved durability” and “reinforcement cords being para-aramid cords.” EX1004, Abstract. According to Yokokura, “[a]fter [a] driving test [on a drum], each cord was removed from the corresponding tire and then evaluated for strength in accordance with JIS L 1017,” and “[t]he measurement strength was converted into the retention ratio in %.” *Id.*,

[0082]. Moreover, Table 5 of Yokokura disclosed a cord strength retention ratio of 89%, 85%, 98% and 84% for Examples 3-1, 3-2, 3-3, and 3-4, respectively. These values fall within the claimed "strength retention rate of 80% or more."

TABLE 5-continued

	Comparative Example 3	Example 3-1	Example 3-2	Example 3-3	Example 3-4
Right side of the formula (I)	204	249	323	227	330
Heat shrinkage ratio (%) after dry-heating at 150° C. for 30 minutes	0.1	0.1	0.1	0.1	0.1
Twist coefficient Nt	0.64	0.64	0.60	0.75	0.54
Belt-reinforcement layer structure	1 cap 1 layer	1 cap 1 layer	1 cap 1 layer	1 cap 1 layer	1 cap 1 layer
Distance limit for driving on a drum (index)	100	110	115	105	120
Cord strength retention ratio (%) after driving on a drum	55	89	85	98	84
Ground contact area (normal temperature) (index)	100	111	106	113	104
Steering stability at 40 km/h (index)	100	105	103	106	102
Steering stability at 180 km/h (index)	100	101	99	101	102

EX1014, Table 5 (color annotation added).

A POSITA would have been motivated to combine the teachings of Chung, Harikae, and Yokokura such that the nylon-aramid reinforcement cord taught by Chung combined with Harikae has a strength retention rate of 80% or more after a disc fatigue test (i.e., driving test on a drum) is performed according to JIS-L 1017 method of Japanese Standard Association. EX1003, ¶176. Indeed, as Yokokura explains, "[t]he higher the retention ratio is[,] the better the test result is." EX1014,

[0082]. Moreover, Kwon explains that if the strength retention rate of a tire cord does not exceed 90%, "the ability to support the tire is reduced due to deterioration of physical properties during driving, resulting in deterioration of driving performance and, in severe cases, tire rupture." EX1021, [139].

Moreover, "a strength retention rate of 80% or more" could have been obtained through routine optimization of the prior art and is thus not inventive. EX1003, ¶177; *Merck & Co. Inc.v.Biocraft Lab. Inc.*, 874 F.2d 804, 809 (Fed. Cir. 1989) (claim limitations are not distinguishable over the prior art when the only differences are results reached with routine procedures yielding predictable results); *In re Kulling*, 897 F.2d 1147, 1149 (Fed. Cir. 1990) (claimed amount of wash solution was found unpatentable as a matter of routine optimization in the pertinent art).

2. Claim 2

Chung discloses and claims "[a] hybrid tire cord comprising nylon filaments and aramid filaments, wherein the nylon filaments and the aramid filaments are included at a weight ratio of 10:90 to 90:10." EX1012, claim 1; EX1003, ¶¶178-179. The majority of ratios within this range fall with the claimed "20:80 to 80:20" weight ratio. For example, Chung discloses specific embodiments with weight ratios that satisfy the claimed range, including comparative examples 3 and 4, which have a 30:70 and 70:30 nylon-to-aramid weight ratio, respectively. *See* EX1012, 7

(TABLE 2). *In re Wertheim*, 541 F.2d at 267 ("Of course, the disclosure in the prior art of any value within a claimed range is an anticipation of the claimed range."); *Ormco*, 463 F.3d at 1311 ("Where a claimed range overlaps with a range disclosed in the prior art, there is a presumption of obviousness," which only "can be rebutted if it can be shown that the prior art teaches away from the claimed range, or the claimed range produces new and unexpected results.").

3. Claim 3

Chung discloses and claims a "hybrid tire cord ... [with] Tensile strength [(i.e., breaking tenacity)] of 8.0 to 15.0 g/d as measured by ASTM D885; Elongation at break of 10 to 20% measured by ASTM D885." EX1012, claim 6. EX1003, ¶¶180-182. Although Chung teaches more potential elongation at break percentages than recited in claim 3, Chung discloses each and every claimed elongation at break percentage. In addition, Chung discloses specific embodiments that have elongation at break percentages that fall within the claimed range (7 to 15%)—such as embodiments 1 and 2. *See* EX1012, 8 (TABLE 3).

Although Chung does not specifically disclose that the 2004 version of the ASTM D885 was used, a POSITA would have understood Chung's disclosure of the ASTM D885 standard to refer to the then-recent editions of it—for example, the

September 2001, April 2002, November 2002, February 2003, ***October 2004***.[7] EX1003, ¶182. When Chung was first filed with the Korean Patent Office on June 3, 2005, the 2004 edition of the ASTM D885 was the most recent version. Thus, a POSITA would have understood Chung to disclose ***the 2004 edition***, as claimed.[8] To the extent Patent Owner disagrees, a POSITA would have also found it obvious to use the most recent edition (or any one of a limited set of editions) of a standard test measurement used in the prior art.

4. Claim 4

(a) [4pre]

See supra §XI.D.1(a) above regarding limitation [4pre]. EX1003, ¶183.

(b) [4a]

See supra §XI.D.1(b) above regarding limitation [4a]. EX1003, ¶184.

---

[7] A POSITA would have known that the American Society for Testing and Material (ASTM) develops international consensus standards, including model standard test methods for tire cords. EX1003, ¶183.

[8] Note, the 2001-2004 editions of the ASTM D 885 standard are substantially the same with respect to the breaking tenacity and elongation at break measurement methods. EX1003, ¶183 (comparing EX1027-EX1032 (2001-2004 ASTM D 885 editions).

(c) [4b]

See supra §XI.D.1(c) above regarding limitation [4b]. EX1003, ¶185.

(d) [4c]

See supra §XI.D.1(d) above regarding limitation [4c]. EX1003, ¶186.

(e) [4d]

See supra §XI.D.1(e) above regarding limitation [4d]. EX1003, ¶187.

(f) [4e]

See supra §XI.D.1(f) above regarding limitation [4e]. EX1003, ¶188.

(g) [4f]

See supra §XI.D.1(g) above regarding limitation [4f]. EX1003, ¶189.

5. Claim 6

Chung discloses and claims "[a] method for manufacturing a hybrid tire cord, comprising the steps of a) twisting nylon filaments and aramid filaments to produce a z-twisted yarn; b) combining 2 to 3 strands of the z-twisted yarn to produce an s-twisted yarn; c) ***immersing the s-twisted yarn in an adhesive solution and then drying and heat-treating it***." EX1012, claim 9 (emphasis added); EX1003, ¶¶190-191. This method is also illustrated in Drawing 2 of Chung.

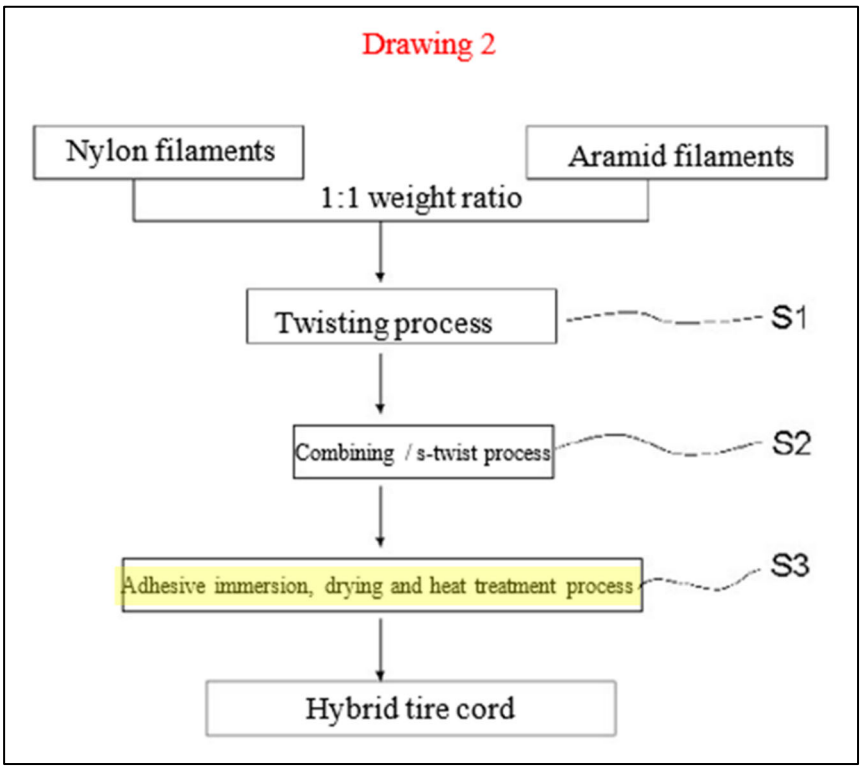

EX1012, Drawing 2 (color annotation added).

6. Claim 7

Chung discloses "immersing the s-twisted yarn in an adhesive solution." EX1012, 4; EX1003, ¶¶192-193. According to Chung, "[t]he adhesive solution used as the above adhesive is not particularly limited in the present invention, and an RFL solution (Resorcinol Formaldehyde Latex), which is an impregnation solution for tire cords commonly used in this field, or an epoxy-based adhesive composition solution, etc. can be used." EX1012, 6.

XII. GROUND 5: CLAIM 5 IS RENDERED OBVIOUS BY CHUNG IN VIEW OF HARIKAE AND YOKOKURA, AND FURTHER IN VIEW OF ROWAN AND/OR BUCHANAN

A. Motivation to Combine

A POSITA would have been motivated to combine the teachings of Rowan and/or Buchanan with the combined teachings of Chung, Harikae, and Yokokura, such that the first step (i.e., plying nylon yarn), second step (i.e., plying aramid yarn), and third step (i.e., twisting plied nylon and aramid yarns together into a cord) are performed simultaneously and continuously, as Rowan and Buchanan disclose. EX1003, ¶¶198-200. Rowan's method comprises "twisting two or more yarns together to form a cable, and directly after twisting, applying and curing an adhering agent to the cable to form a treated cord." *Id.* In Rowan, "machines combine the ply and twisting step into one operation, thus rendering the tire cord production process more efficient and cost effective." EX1015, [0007], [0039]. According to Rowan, conventional methods of plying and twisting in two separate steps is "laborious and expensive." *Id.*, [0029]. Further, as discussed in Ground 3, Rowan and other references such as Fritsch and Osbourne provide additional evidence and motivations of a continuous and simultaneous process. EX1003, ¶201

B. Reasonable Expectation of Success

A POSITA would have reasonably expected to be able to successfully combine Chung, Harikae, and Yokokura with Rowan and/or Buchanan in the

manner described above, *see supra* §XII.B, because each reference teaches a reinforcement cord, and a POSITA would have understood the modifications required by the combination to be mechanical and well within his knowledge and skill set. EX1003, ¶¶199-202. For example, combining the plying and cord twisting steps into one process such that "the aramid and nylon yarns are continuously supplied and are primarily twisted (i.e., twisting the individual yarns) and then secondarily twisting (i.e., twisting the twisted aramid and nylon yarns together), such that in a given instant, primary and secondary twisting is occurring simultaneously," EX1002 (Reply to Office Action of December 29, 2016), 179, would require mere mechanical modifications to the equipment used to manufacture the reinforcement cords. EX1003, ¶¶199-202.

C. Claim Analysis

1. Claim 5:

The combination of Chung, Harikae, and Yokokura discloses performing the first, second, and third steps, *see supra* §XI.D.1, but does not explicitly provide that the three steps are performed simultaneously and continuously. EX1003, ¶¶194-197. During prosecution, Applicant argued that the disclosure taught "a continuous-type process, where the aramid and nylon yarns are continuously supplied and are primarily twisted (i.e., twisting the individual yarns) ***and then*** secondarily twisting (i.e., twisting the twisted aramid and nylon yarns together), such that in a given

instant, primary and secondary twisting is occurring simultaneously." EX1002 (Reply to Office Action of December 29, 2016), 179 (emphasis added).

As discussed above in Gorund 3, Rowan and Buchanan teach this limitation and a POSITA would have considered it obvious to combine such teachings with Chung, Harikae, and Yokokura.

XIII. THE BOARD SHOULD NOT EXERCISE ITS DISCRETION TO DENY INSTITUTION

A. Fintiv

The Board balances six factors in considering discretionary denial under 35 U.S.C. §314(a) when parallel litigation exists. *Apple Inc. v. Fintiv, Inc.*, IPR2020-00019, Paper 11 (PTAB Mar. 20, 2020) (precedential). Here, the factors ("*Fintiv* factors") favor institution.

Factor 1—potential stay of the district court litigation—is neutral because no party has requested a stay. *VMWare, Inc. v. Intellectual Ventures I LLC*, IPR2020-00470, Paper 13 (PTAB Aug. 18, 2020), at 17 (finding in the absence of a stay motion that this factor "does not weigh for or against discretionary denial").

Factor 2—district court trial date and the Board's statutory deadline—should be considered neutral. The earliest estimated trial date for the district court litigation is far in the future as jury selection is not set to begin until at least February 3, 2026, which is a mere 3 months before the estimated date for the Board's Final Written Decision. Because much will change in one year, the current trial date does not

support denial. *See Dish Network v. Broadband iTV*, IPR2020-01280, Paper 17 at 16 (PTAB Feb. 4, 2021) ("We cannot ignore the fact that the currently scheduled trial date is more than nine months away and much can change during this time"). In addition, even if the Board is inclined to weigh this factor in favor of denial, the Board has frequently found that other factors outweigh this factor, especially for a short difference of 5 months. *T-Mobile USA, Inc. et al. v. Cobblestone Wireless LLC*, IPR2024-00137, Paper 15 (PTAB May 15, 2024) (finding an eight month difference weighs in favor of denial, but that it was outweighed by the compelling merits of the petition).

Factor 3—investment in the district court proceedings—weighs heavily against discretionary denial. The associated district court case is still in the very early stages of litigation: discovery is still in the early stages, the Defendants served their invalidity contentions on December 13, 2024, and Claim Construction hearing is not scheduled until May 12, 2025. Moreover, a claim construction order likely will not issue prior to the PTAB's projected institution decision date. Accordingly, the district court will not invest significant resources or issue substantive orders related to the challenged patent prior to the issuance of an institution decision. *See Fintiv*, IPR2020-00019, Paper 11, at 9-12. Regardless, Petitioner diligently prepared and filed this Petition well before the statutory deadline, which weighs against denying institution.

Factor 4—overlap in the parallel proceedings—is neutral as all the challenged claims are also asserted in the district court litigation.

Factor 5—overlapping parties—is neutral as it is "far from an unusual circumstance that a petitioner in *inter partes* review and a defendant in a parallel district court proceeding are the same." *Sand*, IPR2019-01393, Paper 24, at 12-13.

Factor 6—other considerations—weighs against discretionary denial. As explained, the merits of the Petition are strong, and the Challenged Claims are invalid. For example, none of the grounds asserted herein were previously considered by either the Office or the district courts. *Cf. Comcast Cable Commn's, LLC v. Rovi Guides, Inc.*, IPR2019-00231, Paper 14 at 11 (PTAB May 20, 2019) (obviousness challenges not "previously considered by the Office or any court" weigh in favor of not denying institution). Moreover, the '731 patent is currently asserted in a district court case. Institution of this IPR provides the opportunity for narrowing and simplifying the litigations for the district court.

Compelling Merits—discretionary denial is also not warranted because this petition presents compelling evidence of unpatentability. As discussed above, '731 patent concedes that nylon-aramid hybrid reinforcement cords were widespread and well known in the art. *See supra* §I. The patent purports only to optimize performance and physical properties of a hybrid reinforcement cord, such as uniformity, stability, strength, and fatigue. But the claimed properties result from

mere routine optimization, and nonetheless, are clearly taught and invalidated by the prior art discussed above.

Accordingly, the Board should decline to exercise its discretion under *Fintiv* and institute trial.

B. §325(d)

The same or substantially the same prior art or arguments were not previously presented to the Office. Although Tamura and Chung were cited in Patent Owner's information disclosure statements, and Baldwin was relied on during prosecution, the examiner did not have the benefit of considering these references in view of the combination references identified in this Petition, including Barnes, Buchanan, Hariake, Yokokura, and Rowan. *Oticon Medical AB et al. v. Cochlear Limited*, IPR2019-00975, Paper 15, 9-20 (PTAB Oct. 16, 2019) (precedential) (finding the first prong of the *Advanced Bionics* framework unsatisfied when the particular combinations set forth in the petition were not considered by the examiner). Thus, discretionary denial would be improper under *Advanced Bionics* at least because the *Becton Dickinson* factors (d)-(f) weigh in favor of institution.

Further, the examiner withdrew his Baldwin-based rejection only after Patent Owner argued that "Baldwin fails to teach or suggest a secondarily-twisted yarn coated with adhesive that has a strength retention rate of 80% or more after a disc fatigue test is performed according to JIS-L 1017 method of Japanese Standard

Association, and has a dry heat shrinkage of 1.5 to 2.5%" and added this language to the independent claims. EX1002 (Reply to Office Action (Aug. 3, 2017), 30-31. As explained above in Sections VIII.D and IX.D, Tamura, Chung, and/or Yokokura clearly teach these limitations and thus overcome any purported deficiencies the examiner may have identified in connection with Baldwin.

The remaining references (*i.e.,* Baek, Barnes, Buchanan, Hariake, Yokokura, and Rowan) were not before the Examiner and are not cumulative of Tamura, Chung, or Baldwin. Instead, they teach *additional* limitations regarding breaking tenacity and elongation at break measurements according to ASTM D885 (2004) as well as continuous and simultaneous first, second, and third twisting.

The Board should not exercise its discretion to deny institution under §325(d).

XIV. MANDATORY NOTICES AND FEES

A. Real Party-in-Interest

The real parties-in-interest for Petitioner is HS Hyosung Advanced Materials Corp. and Hyosung USA, Inc.

B. Related Matters

Kolon Industries, Inc. v. Hyosung Advanced Materials Corp. and Hyosung USA, Inc., No. 8:24-cv-00415 (C.D. Cal.).

C. Counsel and Service Information

Petitioner provide the following counsel and service information. Petitioner consent to electronic service the email addresses listed in the table below. Pursuant to 37 C.F.R. §42.10(b), a Power of Attorney accompanies this Petition.

LEAD COUNSEL	BACK-UP COUNSEL
James M. Glass (Reg. No. 46,729) jimglass@quinnemanuel.com QUINN EMANUEL URQUHART & SULLIVAN, LLP 295 Fifth Avenue New York, NY 10016 Tel: (212) 849-7000 Fax: (212) 849-7100	Quincy Lu (Reg. No. 76,954) quincylu@quinnemanuel.com PTAB@quinnemanuel.com QUINN EMANUEL URQUHART & SULLIVAN, LLP 1109 First Avenue, Suite 210 Seattle, WA 98101 Tel: (206) 905-7000 Fax: (206) 905-7100

D. Payment of Fees

The undersigned authorizes the Office to charge the fee required for this Petition for *Inter Partes* Review to Deposit Account No. 50-5708. Any additional fees that might be due are also authorized.

XV. CONCLUSION

For the reasons above, *inter partes* review is requested.

Date: February 28, 2025

Respectfully submitted,

By: /s/ *James M. Glass*
James M. Glass

Counsel for Petitioner

CERTIFICATION UNDER 37 C.F.R. § 42.24

Under the provisions of 37 C.F.R. § 42.24, the undersigned hereby certifies that the word count for the foregoing Petition for *inter partes* review (excluding the table of contents, table of authorities, mandatory notices, certificate of service or word count, and appendix of exhibits or claim listing) totals 13,920 words, which is within the word limit allowed under 37 C.F.R. § 42.24(a)(i).

Date: February 28, 2025

/s/ James Glass
James Glass (Reg. No. 46729)

CERTIFICATE OF SERVICE

Pursuant to 37 C.F.R. §§ 42.6(e), 42.105(a), the undersigned hereby certifies service on the PO of a copy of this Petition and its respective exhibits at the official correspondence address for the attorneys of record for the ’731 patent as shown in USPTO PAIR via FedEx:

BIRCH STEWART KOLASCH & BIRCH, LLP
2600 Park Tower Drive
Suite 600
Vienna, VA 22180-7371
UNITED STATES

Courtesy copies were also sent via electronic mail to the parties’ counsel of record in the related district court proceeding, including Patent Owner’s counsel:

Doug.Lumish@lw.com
Charles.Sanders@lw.com
Joe.Akalski@lw.com
kolonhyosung.lwteam@lw.com
Marla.Butler@thompsonhine.com
Jonathan.Nussbaum@thompsonhine.com
Ash.Patel@thompsonhine.com
Josepher.li@armondwilson.com
hyosung-litigation@armondwilson.com
jeller@bskb.com

Date: February 28, 2025

/s/ James Glass
James Glass (Reg. No. 46729)