**IN THE UNITED STATES PATENT AND TRADEMARK OFFICE**

_____

**BEFORE THE PATENT TRIAL AND APPEAL BOARD**

_____

HS HYOSUNG ADVANCED MATERIALS CORP.,

Petitioner,

v.

KOLON INDUSTRIES, INC.,

Patent Owner.

_____

Case No. IPR2025-00662

U.S. Patent No. 9,789,731

_____

# DECLARATION OF JON RUST PH.D. IN SUPPORT OF PETITION FOR *INTER PARTES* REVIEW OF U.S. PATENT NO. 9,789,731

**TABLE OF CONTENTS**

I. Introduction ..... 8

II. BACKGROUND AND QUALIFICATIONS ..... 8

III. LEGAL Standards ..... 13

A. Claim Construction ..... 13

B. Anticipation ..... 14

C. Obviousness ..... 15

IV. the ’731 Patent ..... 19

A. Background of Technology ..... 19

B. Overview of the ’731 Patent ..... 23

C. Prosecution History of the ’731 Patent ..... 25

V. Person of Ordinary Skill in the Art ..... 25

VI. CLAIM CONSTRUCTION ..... 27

VII. Overview of the Prior Art ..... 27

A. Tamura (EX1006) ..... 27

B. Baldwin (EX1007) ..... 28

C. Baek (EX1008) ..... 29

D. Barnes (EX1009) ..... 29

E. Buchanan (EX1010) ..... 30

F. Osborne (EX1011) ..... 31

G. Chung (EX1012) ..... 32

H. Harikae (EX1013) ..... 34

I. Yokokura (EX1014) ..... 35

J. Rowan (EX1015) ..... 36

VIII. GROUNDS OF REJECTION ..... 38

A. Ground 1: Tamura in view of Baldwin or Baek Renders Claims 1, 2, 4, and 6-7 Obvious ..... 38

1. Motivation to Combine ..... 38

2. Reasonable Expectation of Success ..... 40

3. Claim-by-Claim Analysis ..... 41

B. Ground 2: Tamura in view of Barnes Renders Obvious Claim 3 ..... 58

1. Claim Analysis ..... 58

2. Motivation to Combine ..... 61

3. Reasonable Expectation of Success ..... 62

C. Ground 3: Tamura in View of Baldwin or Baek And Further in View of Rowan and/or Buchanan Renders Claim 5 Obvious ..... 62

1. Claim Analysis ..... 62

2. Motivation to Combine ..... 67

3. Reasonable Expectation of Success ..... 68

D. Ground 4: Chung In view of Harikae and Moreover in view of Yokokura Renders Claims 1-4 and 6-7 Obvious ..... 69

1. Motivation to Combine ..... 69

2. Reasonable Expectation of Success ..... 72

3. Claim-by-Claim Analysis ..... 73

E. Ground 5: Chung in view of Harikae and Yokokura, and Moreover in view of Rowan and/or Buchanan Renders Obvious Claim 5 ..... 95

1. Claim Analysis ..... 95

2. Motivation to Combine .....99

3. Reasonable Expectation of Success .....101

IX. Conclusion.....101

## EXHIBIT LIST

| Ex. | Description |
|---|---|
| 1001 | U.S. Patent No. 9,789,731 ("the '731 patent") |
| 1002 | File History of the U.S. Patent No. 9,789,731 |
| 1003 | Declaration of Jon Rust, Ph.D. |
| 1004 | *Curriculum Vitae* of Jon Rust, Ph.D. |
| 1005 | Japanese Patent No. 2009-68549 ("Tamura") |
| 1006 | Certified Translation of Japanese Patent No. 2009-68549 ("Tamura") |
| 1007 | U.S. Patent Pub. No. 2009/0090447 ("Baldwin") |
| 1008 | Certified Translation of Korean Patent Disclosure No. 10-0245520 ("Baek") |
| 1009 | U.S. Patent Pub. No. 2009/124149 ("Barnes") |
| 1010 | European Patent Pub. No. 0405887A1 ("Buchanan") |
| 1011 | U.S. Patent Pub. No. 2004/0108037 ("Osborne") |
| 1012 | Certified Translation of Korean Patent Disclosure No. 10-2006-0126101 ("Chung") |
| 1013 | Certified Translation of Japanese Patent Publication No. 2007-216778 ("Harikae") |
| 1014 | U.S. Patent Pub. No. 2010/0071826 ("Yokokura") |
| 1015 | U.S. Patent Pub. No. 2005/0249949 ("Rowan") |
| 1016 | U.S. Patent No. 3,977,172 ("Kerawalla") |
| 1017 | U.S. Patent No. 4,652,252 ("Westoff") |

| Ex. | Description |
|---|---|
| 1018 | Korean Patent Disclosure No. 10-0245520 ("Baek") |
| 1019 | Korean Patent Disclosure No. 10-2006-0126101 ("Chung") |
| 1020 | Japanese Patent Publication No. 2007-216778 ("Harikae") |
| 1021 | Certified Translation of PCT Publication No. WO 2009/134063 ("Kwon") |
| 1022 | Non-rubberized Cap-Ply Reinforcements, Angela Filipa Saraiva da Rocha, Continental (July 2014) |
| 1023 | U.S. Patent Pub. No. 2003/0159768 ("Fritsch") |
| 1024 | *Reserved* |
| 1025 | Kolon Industries, Inc., v. Hyosung, Advanced Materials Corp. et al, No. 8:24-cv-00415-JVS-JDE (CDCA) ("Third Amended Complaint for Patent Infringement") |
| 1026 | U.S. Patent No. 7,968,475 ("Carabajal") |
| 1027 | ASTM International. *ASTM D885-01: Standard Test Methods for Tire Cords, Tire Cord Fabrics, and Industrial Filament Yarns Made from Man-Made Organic-Base Fibers.* ASTM International, 2001. |
| 1028 | ASTM International. *ASTM D885-01: Standard Test Methods for Tire Cords, Tire Cord Fabrics, and Industrial Filament Yarns Made from Man-Made Organic-Base Fibers.* ASTM International, 2002. |
| 1029 | ASTM International. *ASTM D885-01: Standard Test Methods for Tire Cords, Tire Cord Fabrics, and Industrial Filament Yarns Made from Man-Made Organic-Base Fibers.* ASTM International, 2003. |
| 1030 | ASTM International. *ASTM D885-01: Standard Test Methods for Tire Cords, Tire Cord Fabrics, and Industrial Filament Yarns* |

| Ex. | Description |
|---|---|
| | *Made from Man-Made Organic-Base Fibers.* ASTM International, 2004. |
| 1031 | ASTM International. *ASTM D885-01: Standard Test Methods for Tire Cords, Tire Cord Fabrics, and Industrial Filament Yarns Made from Man-Made Organic-Base Fibers.* ASTM International, 2006. |
| 1032 | ASTM International. *ASTM D885-01: Standard Test Methods for Tire Cords, Tire Cord Fabrics, and Industrial Filament Yarns Made from Man-Made Organic-Base Fibers.* ASTM International, 2007. |
| 1033 | *Aramid-Nylon 6.6 Hybrid Cords and Investigation of Their Properties*, Rubber Chemistry and Technology, Vol., 85, No. 2, pp. 180-194 (2012) ("Yilmaz") |
| 1034 | *Reserved* |
| 1035 | PCT Publication No. WO 2009/134063 ("Kwon") |
| 1036 | Japanese Industrial Standard JIS L 1017 (1995) |

## I. INTRODUCTION

1. I, Jon Rust, Ph.D., submit this declaration to state my opinions on the matter described below.

2. I have been retained by HS Hyosung Advanced Materials Corp. ("Petitioner"), as an independent expert in this proceeding before the United States Patent and Trademark Office. Although I am being compensated at my usual and customary rate of $500 per hour, no part of my compensation depends on the outcome of this proceeding, and I have no other interest in this proceeding.

3. I understand this proceeding involves U.S. Patent No. 9,789,731 (the "'731 patent"), and I have been asked to consider the validity of certain claims of the '731 patent based on certain prior art references. I have also been asked to consider the state of the art and prior art available as of December 27, 2012. Based on the prior art discussed in this declaration, it is my opinion that claims 1-7 of the '731 patent are unpatentable for the reasons provided below.

## II. BACKGROUND AND QUALIFICATIONS

4. I believe that I am well qualified to serve as a technical expert in this matter based upon my educational and work experience, and In particular, in the field of tire reinforcement cord design and manufacture, and/or fiber or polymer science and processing. My curriculum vitae ("CV") is submitted as Exhibit 1004.

Of note, as shown in my CV, I have extensive experience in fiber and polymer science and processing.

5. I'm currently a Professor Emeritus in the Textile Engineering, Chemistry and Science (TECS) Department in the Wilson College of Textiles at North Carolina State University. The Wilson College of Textiles is the leading institution of its type in the world and produces over half of the doctorates in its field in the United States.

6. I graduated from Clemson University with a B.S. in Mechanical Engineering in 1982 and an M.S. in Fiber Science in 1985. In 1990, I earned my Ph.D., with a focus on Fiber and Polymer Science, from North Carolina State University.

7. I have 37 years of experience in the field of textile engineering and development. Since 1985, I have held various positions with NC State University's Department of Textile Engineering, Chemistry and Science ("TECS"). Between 2008 and 2014, I was the Department Head. I have served as Associate Dean for Academics in the Wilson College of Textiles and Interim Associate Dean for General Education Program Implementation for NC State University. Presently, I am Professor Emeritus of Textile Engineering in the TECS Department, a title I have held since 2020.

8. Separately, I was the Interim Director of Zeis Textiles Extension Education for Economic Development ("ZTE") between 2014 and May of 2019. ZTE provides training and certification in textiles and Lean Six Sigma, and serves the textile industry's prototyping and pilot production needs in its laboratories – spun yarn, knitting, extrusion, weaving, physical testing, and chemical processing including dyeing and finishing.

9. Throughout my career, I have designed, manufactured, tested and/or provided expert testimony concerning many types traditional textile products and nontraditional as well. These have included patented hernia meshes, artificial turf, nasal swabs, warp knitted bale covers, dog-bite protection devices, non-lubricated slides using low friction filament yarns, rock-climbing ropes and a test method for testing castability of various filament fishing lines.

10. I have taught various courses at the undergraduate and graduate levels relating to textile engineering including, most recently, TMS 211, Introduction to Fiber Science; TT 327, Yarn Production and Properties; TE 201, Textile Engineering Science; TE 301, Engineering Textile Structures I: Linear Assemblies; TE 401 and 402 and Textile Engineering Design I and II.

11. I have received over $3 million in grant funds to conduct textile engineering research, with relevant projects including fabric development related to moisture management for use in performance apparel, textile material sustainability,

color control and uniformity and process improvement related to many different textile processes. Most of my funding was sponsored by industry and therefore proprietary and not published.

12. For 17 years, I led multidisciplinary teams of students from several universities working on process improvement projects in the textile industry, including in connection with Milliken and Company, Burlington Industries, UNIFI and others.

13. While at NC State University, I received recognition for my work in textile engineering, including through awards and honors such as the Gertrude Cox Award: for *Innovative Excellence in Teaching and Learning with Technology*; the Division of Undergraduate Academic Programs Award: for *Outstanding Contributions to Undergraduate Education*; the Chancellors Creating Community Award for Outstanding Faculty Committed to Diversity; the NC State Alumni Distinguished Undergraduate Professor; and Outstanding Teacher at NC State University.

14. Throughout my career, I have written or co-written 40 peer-reviewed journal articles, most of which focused on the subject of textile engineering. My substantial work in textile engineering also led to the issuance of the following U.S. Patents, of which I am a listed co-inventor: # 12,018,414: "Warp Knit Fabric for Textile and Medical Applications and Methods for Manufacturing the Same", (w/ Hyosung Ex. 1003, page 11

H. Levinson, JB Davis & D Ward), June 25, 2024; # 11,001,948: "Warp Knit Fabric for Textile and Medical Applications and Methods for Manufacturing the Same", (w/ H. Levinson, JB Davis & B Ward), May 11, 2021; # 10,602,791: "Multi-layered Protective Covering and Uses Thereof", (w/ Jur, Gorga, et al), 2020; # 8,261,415 ("An Apparatus for Cotton Ginning, Processes and Methods Associated Therewith"); #8,120,769 ("Method and System for Fiber Properties Measurement"); # 6,882,423 ("Apparatus and Method for Precision Testing of Fiber Length Using Electrostatic Collection and Control of Fibers"); # 5,774,942 ("Feedforward and Feedback Autoleveling System for Automated Textile Drafting System"); # 5,796,220 ("Synchronous drive system for automated textile drafting system"); # 5,774,943 ("Tongue and Groove Drafting Roller Autoleveling System for Automated Textile Drafting System"); # 5,761,772 ("Securing and Pressuring System for Drafting Rollers for Automated Textile Drafting System"); and # 5,774,940 ("Draftless Sliver Coiler Packaging System for Automated Textile Drafting System"). I am also listed as a co-inventor on Chinese Patent No. ZL200680044482.4 ("An Apparatus for Cotton Ginning, Processes and Methods Associated Therewith").

15. Accordingly, I am an expert in the field of textile engineering, and I was an expert in this field prior December 27, 2012. As a result of my experience and frequent interaction with skilled artisans, I am familiar with the knowledge and

understanding of a person of ordinary skill. In formulating my opinions set forth herein, I have relied upon my training, knowledge, and experience in the relevant art.

## III. LEGAL STANDARDS

16. Petitioner's attorneys have explained to me the legal standards that apply in this case. My understanding of those standards is described below.

17. I am not an attorney, and I do not have formal training in the law regarding patents. I have used my understanding of the following legal principles set forth in this section in reaching my opinions.

18. I understand that, in this proceeding, Petitioner has the burden of proving that the challenged claims are invalid by a preponderance of the evidence.

### A. Claim Construction

19. I have been informed that claim terms are typically given their plain and ordinary meanings, as would have been understood by a person of ordinary skill in the art at the time of the earliest alleged priority date. I have further been informed that when considering the meaning of any terms in the Challenged Claims of the '731 patent, I should apply the plain and ordinary meaning of those terms. I have further been informed that in considering the meaning of the claims, one must consider the language of the claims, the specification, and the prosecution history of record.

20. I have been informed that in general, a preamble limits the invention if it recites essential structure or steps, or if it is necessary to give life, meaning, and vitality to the claim. I have further been informed that a preamble is not limiting where a patentee defines a structurally complete invention in the claim body and uses the preamble only to state a purpose or intended use for the invention. I have further been informed that dependence on a particular disputed preamble phrase for antecedent basis may limit claim scope because it indicates a reliance on both the preamble and claim body to define the claimed invention. I have further been informed that clear reliance on the preamble during prosecution to distinguish the claimed invention from the prior art transforms the preamble into a claim limitation because such reliance indicates use of the preamble to define, in part, the claimed invention.

**B. Anticipation**

21. I understand that under 35 U.S.C. § 102, a patent claim is invalid if its subject matter was patented or described in a printed publication before the effective filing date of the claimed invention. I have been told that this is referred to as invalidity by anticipation. I have been told that a patent claim is anticipated under § 102 if a single prior art reference describes all limitations of the claimed invention.

### C. Obviousness

22. I have been informed that a claim is invalid as obvious under 35 U.S.C. § 103 (pre-AIA) if the differences between the claimed subject matter and the prior art are such that the subject matter as a whole would have been obvious at the time of the invention to a person of ordinary skill in the art. I have been informed that the following matters are relevant to determining whether the claimed invention would have been obvious: (1) the scope and content of the prior art, (2) the difference or differences between the patent claim and the prior art, (3) the level of ordinary skill in the art at the time the invention of the patent, and (4) any secondary considerations or objective indicia of non-obviousness.

23. I have been informed that the combination of familiar elements according to known methods is likely to be obvious when it does no more than yield predictable results. When a claim simply arranges prior art elements with each performing the same function it had been known to perform and yields no more than one would expect from such an arrangement, then such a combination is obvious. When a patent claims a structure already known in the prior art altered by the mere substitution of one element for another known in the field, the combination is likely to be obvious unless the combination yields an unpredictable result.

24. I have been informed that when a work is available in one field of endeavor, design incentives and other market forces can prompt variations of it,

either in the same field or a different one. If a person of ordinary skill in the art can implement a predictable variation, such a variation is likely unpatentable. For the same reason, if a technique has been used to improve one device, and one of ordinary skill in the art would recognize that it would improve similar devices in the same way, using the technique is obvious unless its actual application is beyond his or her skill. One question to consider is whether the improvement is more than predictable using prior art elements according to their established functions.

25. I have been informed that it may often be necessary, in a validity analysis, to consider whether there was an apparent reason to combine the known elements in the fashion claimed by the patent at issue. This can be accomplished by looking to interrelated teachings of multiple patents or other publications or pieces of prior art; the effects of demands known to the design community or present in the marketplace; and the background knowledge possessed by one of ordinary skill in the art.

26. I have been informed that a validity analysis need not seek out precise teachings directed to the specific subject matter of the challenged claim; it is appropriate to take account of the inferences and creative steps that a person of ordinary skill in the art would employ. I have been informed that a person of ordinary skill in the art is a person of ordinary creativity, not an automaton.

27. I have been informed that a claim composed of several elements is not proved obvious merely by demonstrating that each element was, independently, known in the prior art. I have been informed that it can be important to identify a reason that would have prompted a person of ordinary skill in the art in the relevant field to combine the elements in the way the claimed new invention does. I am told that one way that subject matter can be proved obvious is by noting there existed at the time of the invention a known problem for which there was an obvious solution encompassed by the patent's claims. I have been informed that any need or problem known in the field of endeavor at the time of the claimed invention and addressed by the patent can provide a reason for combining the elements in the manner claimed.

28. I have been informed that one should not assume that a person of ordinary skill in the art attempting to solve a problem will be led only to those elements of prior art designed to solve the same problem. Instead, I have been informed that since familiar items may have obvious uses beyond their primary purposes, in many cases a person of ordinary skill in the art will be able to fit the teachings of multiple prior art references together like pieces of a puzzle.

29. I have been informed that, when there is a design need or market pressure to solve a problem and there are a finite number of identified, predictable solutions, persons of ordinary skill in the art have good reason to pursue the known options within their technical grasp. If this leads to the anticipated success, the

product was likely not accomplished by innovation but by using ordinary skill and common sense. I have been informed that, in such an instance, the fact that the combination was obvious to try may show that the combination was obvious.

30. I have been informed that, when determining whether a claimed combination would have been obvious, the correct analysis is not whether a person of ordinary skill in the art, writing on a blank slate, would have chosen the particular combination of elements described in the claim. Instead, I have been informed that the correct analysis considers whether one of ordinary skill, facing the wide range of needs created by developments in the field of endeavor, would have seen a benefit to selecting the combination claimed.

31. I have been informed that, when determining whether a claimed invention is obvious, any "secondary considerations" of non-obviousness identified by the patentee should also be considered. These secondary considerations can include:

- commercial success of the invention, causally related to the invention itself rather than to companion factors, such as advertising or attractive packaging;
- the invention taught away from the technical direction followed by those skilled in the art;
- a long-felt but unsatisfied need for the invention while the needed implementing arts and elements had long been available;
- the invention achieves results unexpected to those skilled in the art;

- copying of the invention by competitors as distinguished from their independent development
- unsuccessful attempts by those skilled in the art to make the invention;
- acquiescence by the industry to the patent's validity by honoring the patent through taking licenses or not infringing the patent, or both; and
- skepticism, disbelief in or incredulity by those skilled in the art that the patentee's approach worked.

32. I have been informed that, for the above information to impact the obviousness of a patent claim, there must be a nexus between the alleged secondary considerations and the claims. In addition, I have been informed that the burden of introducing evidence of secondary considerations generally is on the Patent Owner. If the Patent Owner or its expert should assert secondary considerations of non-obviousness, I reserve the right to provide a Declaration addressing assertions of non-obviousness due to secondary considerations.

## IV. THE '731 PATENT

### A. Background of Technology

33. I first begin with a summary of the technology involved with the '731 patent.

34. Reinforcement is an essential part of a tire. Reinforcement provides strength and stability to the tire, similar to bones in a human body. Tire reinforcements can be made of various materials, including textiles. Originally,

textile reinforcements were made of cotton, which was slowly replaced by rayon. And at the time of the ’731 patent, nylon and aramid tire reinforcement materials were prevalent—particularly for use in the tire’s cap ply. The “use of tire cords made from high tenacity organic fibers such as rayon, nylon, aramid, and polyester in a construction of moderate twist has remained the principal reinforcing method.” EX1015 (Rowan), [0005].

35. One important way to improve tire performance is to improve the physical properties of the tire cord used as a reinforcing material. EX1021 (Kwon), [2]. Previously, reinforcement cords were entirely nylon or entirely aram*Id.* Aramid is a high-tenacity, high-modulus, low-elongation, and thermally-stable material. And nylon 6.6 is a high elongation, low-modulus, high-fatigue-resistant material. In the early 2000’s, Michelin developed a new textile reinforcement which combined the beneficial aspects of nylon and aramid and significantly improved high-performance tires—i.e., the nylon-aramid hybrid reinforcement cord. Hybrid cords are a combination of two or more types of yarns plies twisted together (e.g., a nylon yarn and an aramid yarn).

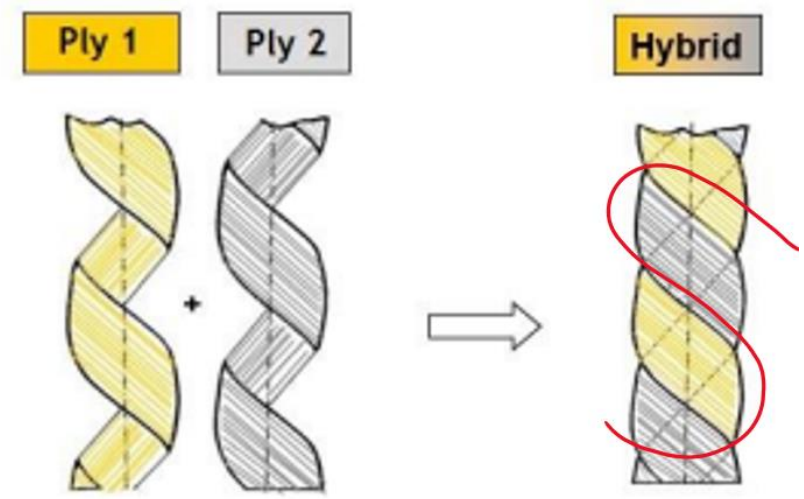


EX1022 (*annotation in red added*).

36. Each ply is first twisted along its own axis and then combined with another ply to form a cord. The direction of ply twisting is indicated by the terms "z" and "s." A twist moving from right to left is referred to as a "z" twist, while a twist moving from left to right is called an "s" twist. In certain cases, each individual ply is twisted in the "z" direction before the two separately twisted plies are combined with an "s" twist to create a cord. Twisting reduces the cord's tensile strength but enhances its resistance to flex fatigue. Therefore, the number of twists applied to a ply must be carefully balanced to optimize both tensile strength and flex fatigue resistance.

37. Furthermore, since textile fabric does not naturally adhere well to rubber, textile reinforcements have traditionally been treated with adhesive solutions—commonly Resorcinol-Formaldehyde-Latex or various epoxies. These

adhesives serve as bonding agents between the textile reinforcement cord and the rubber tire. The illustration below depicts how reinforcement cords bond to a rubber cap ply.

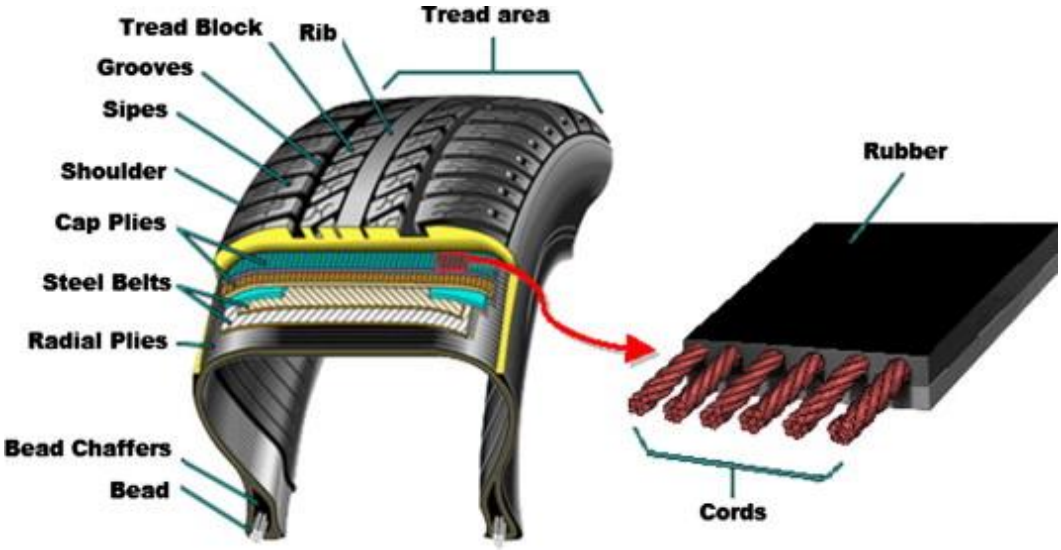


38. Drying and heat treatment—In particular, stretching the textile cords at elevated temperatures—usually follow. This process helps minimize unwanted thermal shrinkage. One known way method of trying and heating is with the claimed three-step adhesive-dry-heat. In my opinion, this process was widespread and well known in the art at the time of the ’731 patent. For instance, Kerawalla (EX1016), a U.S. patent that issued back in 1976, discloses a hybrid cord “[d]ipped in epoxy adhesive, dried, and treated at 475ºF for one minute . . . and then dipped in resorcinol-formaldehyde latex, dried, and treated at 475ºF for one minute.” EX1016

(Kerawalla), 2:46-48. Tamara and Chung contain similar disclosures. *See* EX1006 (Tamura), [0031]; EX1012 (Chung), at 6.

39. Overall, aramid-nylon hybrid reinforcement cords are recognized for offering superior properties compared to previous aramid-aramid and nylon-nylon cord constructions. For example, in contrast to aramid-aramid cords, hybrid cords exhibit greater fatigue resistance, increased elongation, lower raw material costs, and better shrinkage control. Similarly, when compared to nylon-nylon cords, hybrid cords demonstrate reduced shrinkage, enhanced handling and cornering stability, improved speed performance, and lower rolling resistance.

**B. Overview of the ’731 Patent**

40. I have reviewed the ’731 patent. The ’731 patent pertains to a hybrid fiber cord and its method of manufacture. EX1001, 1:6-7. The disclosed hybrid fiber cord 100 consists of a nylon z-twisted yarn 110 and an aramid z-twisted yarn 120, with both yarns having an identical twist number. *Id.*, 3:6-10, 4:5-6. These nylon and aramid z-twisted yarns are then combined using an s-twist to create hybrid fiber cord 100, maintaining the same twist count as the individual z-twisted yarns. *Id.*, 3:10-12, 3:23-24, 4:6-9. The patent further describes that z-twist occurs in the counter-clockwise direction, and the s-twist occurs in the clockwise direction. *See id.*, 4:5-9.

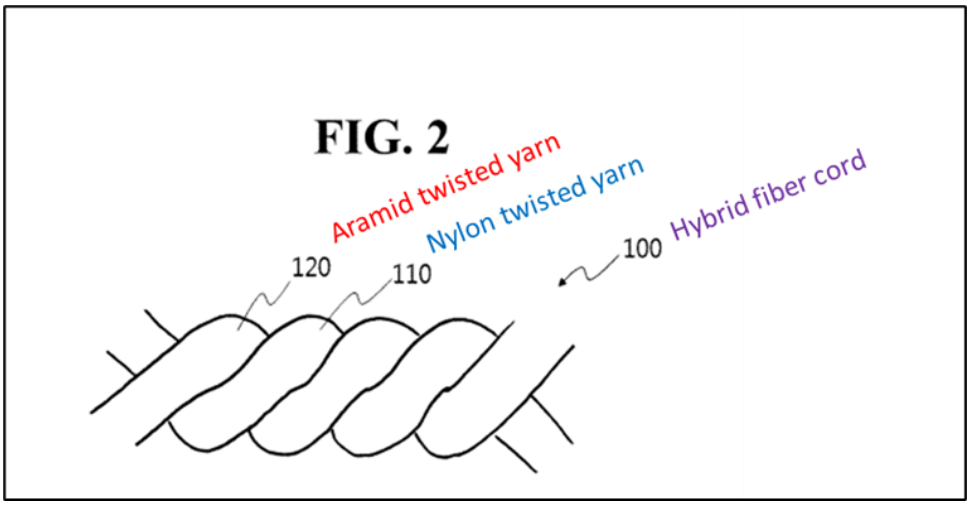


EX.1001, FIG. 2 (annotations added).

41. The ’731 patent describes a process in which the hybrid fiber cord 100 is submerged in an adhesive solution to enhance its adhesion to a tire, followed by drying and heat treatment. EX1001, 7:40-44. “The adhesive solution may be, but not limited to, RFL (Resorcinol Formaldehyde Latex) solution or epoxy-based adhesive solution which are typically used in this art as an adhesive solution for a tire cord.” *Id.*, 7:45-48. According to the patent, a hybrid fiber cord produced using this method “has a breaking tenacity of 8.0 to 15.0 g/d, elongation at break of 7 to 15%, and dry heat shrinkage of 1.5 to 2.5%, the breaking tenacity and elongation at break being measured according to ASTM D885.” *Id.*, 8:1-5. Additionally, the cord is disclosed to maintain a “strength retention rate of 80% or more after the disc fatigue test performed according to JIS-L 1017 method of Japanese Standard Association.” *Id.*, 8:15-19.

### C. Prosecution History of the ’731 Patent

42. I have reviewed the prosecution history of the applications that led to the ’731 patent. The examiner twice rejected the application that became the ’731 patent before allowing it. In both Office Actions, the examiner maintained that Baldwin (US 2009/0090447) teaches “a nylon primarily twisted yarn . . . [and] an aramid primarily twisted yarn . . . secondarily twisted together to have identical structures with each other.” EX1002 (Non-Final Rejection (Sept. 29, 2016), at p. 4). And Patent Owner never challenged or disputed the examiner’s position. Instead, Patent Owner argued that “Baldwin fails to teach or suggest a secondarily-twisted yarn coated with adhesive that has a strength retention rate of 80% or more after a disc fatigue test is performed according to JIS-L 1017 method of Japanese Standard Association, and has a dry heat shrinkage of 1.5 to 2.5%” and added this language to the independent claims to overcome Baldwin. EX1002 (Reply to Office Action (Aug. 3, 2017) at pp. 8-9. The Patent Examiner subsequently allowed the application without providing any specific reasons for allowance.

## V. PERSON OF ORDINARY SKILL IN THE ART

43. I am informed that patentability must be analyzed from the perspective of “one of ordinary skill in the art” in the same field as the ’731 patent at the time of the invention. As previously discussed, the relevant time of invention is the patent’s priority date, which is no earlier than December 21, 2009. Moreover, I understand

that whether or not a patent application provides "written description" support for patent claims must also be assessed from the perspective of a person of ordinary skill in the art.

44. Based on the materials and information I have reviewed and based on my experience in the technical areas relevant to the '731 patent, a person of ordinary skill in the art at the time of the alleged invention of the '731 patent would have had at least a Bachelor of Science degree in materials science and engineering, textile engineering, chemistry, or an equivalent field, and at least two years of experience with tire reinforcement cord design and manufacture, and/or fiber or polymer science and processing.

45. More education can supplement practical experience and vice versa. Based on my knowledge and experience, including as discussed above in Section II, I exceeded the level of skill of a person of ordinary skill in the art at the time of the alleged invention of the '731 patent and can provide opinions regarding the knowledge of a person of ordinary skill in the art as of that time.

46. My opinions herein are, where appropriate, based on my understandings as to a person of ordinary skill in the art at that time.

47. I myself had more than these capabilities at the time of the alleged invention of the '731 patent.

## VI. CLAIM CONSTRUCTION

48. As I discussed above, I have been informed that for purposes of *inter-partes* reviews, the standard for claim construction of terms within the claims of the patent is the same as that applied in federal district court litigation. I have been asked to assume that the claim terms otherwise have their plain and ordinary meaning to a person skilled in the art in light of the specification and the prosecution history.

49. As of this time, I am not aware of any term that requires specific construction for my opinions. To the extent Patent Owner suggests a narrow construction for a term, I reserve the right to respond to those opinions.

## VII. OVERVIEW OF THE PRIOR ART

50. Below, I discuss the references I rely on. Like the '731 patent, each reference below relates to a hybrid reinforcement cord and/or a method for making the same.

### A. Tamura (EX1006)

51. The Japanese application that published as Tamura was filed on September 11, 2007, and published on April 2, 2009. I understand that therefore Tamura qualifies as prior art.

52. Tamura discloses and claims a large-diameter rubber hose reinforced with a composite fiber fabric and/or fiber cord made from a combination of aramid and nylon fibers. EX1006, [claim 1]. Similar to tires, Tamura explains that large-

diameter hoses used for transporting substantial amounts of liquid, such as crude oil, are typically exposed to high pressures and therefore require a reinforcing layer. See *Id.*, [0002]. Tamura "aims to provide a large-diameter rubber hose that maintains the adhesive strength between the rubber layer and the reinforcing material layer . . . [that] exhibits little change in hose diameter due to fluid pressure when transporting fluid, and has excellent durability and dimensional stability." *Id.*, [0009].

53. Tamura states that the "above-mentioned composite fiber cord is obtained by lower twisting a predetermined number of aramid fibers and nylon fibers, each of which is individually twisted, and then upper twisting the resulting fibers together." *Id.*, [0018]. "The number of lower twists is usually set to be the same as the number of upper twists." *Id.*, [0023].

**B. Baldwin (EX1007)**

54. The application that published as Baldwin was filed provisionally on November 9, 2007, and non-provisionally on October 5, 2007. Baldwin (US 2009/0090447) published on April 9, 2009, and thus qualifies as prior art to the '731 patent under at least § 102(b). Baldwin discloses a "cable [ ] formed of an aramid yarn and a nylon yarn cabled together. EX1007, Abstract. FIG. 1 of Baldwin illustrates "a composite or hybrid cord [] comprised of one or more yarns of aramid 3, and more preferably, only a single yarn" and a "nylon yarn 2 . . . [p]referably only a single yarn of nylon is used." EX1007, [0062]-[0063].

### C. Baek (EX1008)

55. The Korean patent that published as Baek was filed on September 25, 1997, and published on March 2, 2000. Baek (KR 10-0245520) thus qualifies as prior art to the ’731 patent under at least § 102(b).

56. Baek discloses “a fiber cord composed of aramid and nylon with excellent structural stability and adhesiveness.” EX1008, Abstract. It is “formed by twisting nylon ply with excellent adhesive strength and aramid ply with excellent structural stability.” EX1008, 4-2. According to Baek, this hybrid aramid-nylon cord (shown in FIG. 2) compensates for the weak adhesion of the conventional aramid cord (shown in FIG. 1). *Id*.

### D. Barnes (EX1009)

57. The application that published as Barnes was filed provisionally on November 9, 2007, and non-provisionally on October 28, 2008. I understand that therefore Barnes qualifies as prior art.

58. Barnes describes and claims multi-filament yarns having high tenacity and low shrinkage and a method for making them. EX1009, Abstract. Per Barnes, these yarns and fabrics are particularly useful for automobile airbag fabrics. *Id.* An objective of Barnes is to reduce yarn breaks, reflected by higher yarn tenacity at break and higher elongation a break measurements. *See Id.*, [0006]. Barnes describes various test methods in which the “[y]arn tenacity at break and elongation

at break [were] measured according to ASTM D 885," *Id.*, [0076], which is a standard testing method for tire cords, tire cord fabrics, and industrial filament yarns.

**E. Buchanan (EX1010)**

59. The European application that published as Buchanan was filed on June 25, 1990, and published on February 1, 1991. I understand that therefore Buchanan qualifies as prior art.

60. Buchanan describes "a composite yarn (42) comprising at least two yarn bundles plied together in alternating s and z composite directions of twist." EX1010, Abstract. The twists are "simultaneously applied to twist the [yarn] strands [10] and ply the strands of each multi-stranded bundle [40] together." *Id.*, 1:36-39. "By the time the converged strands pass the twisting apparatus 32, a pair of twisted bundles 40 of strands is created." *Id.*, 3:45-47. The bundles 40 converge in the compression tube 38 and "ply together in a direction of twist . . . which is opposite to the bundle direction of twist," forming the composite yarn 42. *Id.*, 3:50-4:5.

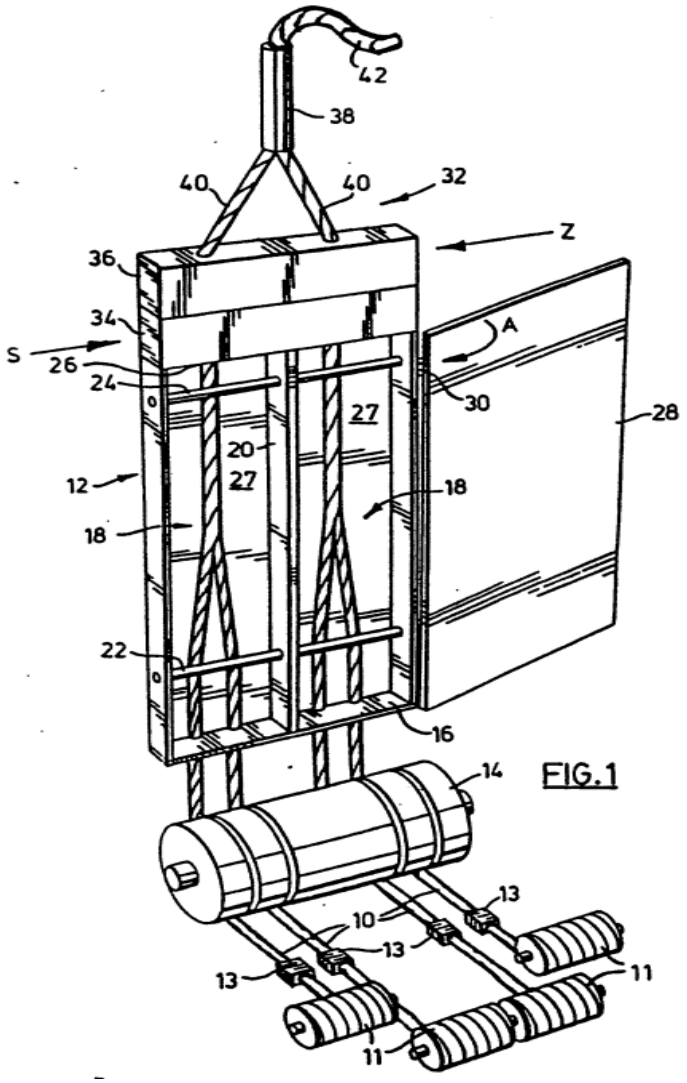


EX1010 (Buchanan), FIG. 1.

**F. Osborne (EX1011)**

61. The application that published as Osborne was filed on November 19, 2003, and published on June 10, 2004. I understand that therefore Osborne qualifies as prior art. Osborne describes and claims a tire (1) with a reinforcing ply. "The plies 14 and 15 are made of high elastic modulus at high stress cords, which are helically wound in order to ensure a good stiffening hoop effect of the crown 2." Hyosung Ex. 1003, page 31

EX1011, [0061]. The "high elastic modulus at high strain cords comprise nylon yarn associated with aramid yarn." EX1011, claim 24.

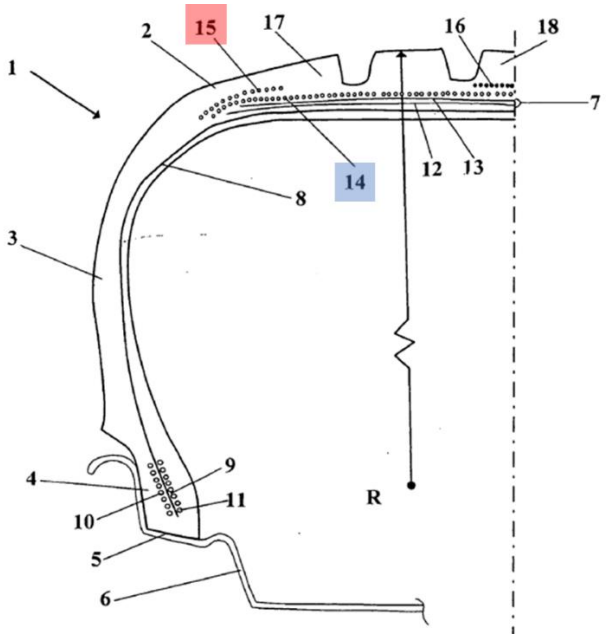


EX1001, FIG. 1 (color annotations added).

62. Osbourne describes that the aramid-nylon cord is "made from two identical aramid yarns . . . individually twisted . . . in a first direction and from one yarn . . . twisted . . . in the same direction, these three yarns being further simultaneously twisted . . . in the opposite direction." EX1011, [0075].

**G. Chung (EX1012)**

63. The Korean application that published as Chung was filed on June 3, 2005, and published on December 7, 2006. I understand that therefore Chung qualifies as prior art. Chung describes and claims "a hybrid tire cord including nylon filaments and aramid filaments, which have excellent physical properties and

reduced production costs and can be applied to ultra-high performance tires, and a method for manufacturing the same." EX1012, at 3 [Technical Field]. Chung aims "to provide a hybrid tire cord manufactured from a nylon filament having excellent shrinkage force and capable of preventing movement of a belt cord, and an aramid filament having high modulus characteristics" and "to provide use of the hybrid tire cord for applying it to a cap ply of a tire, particularly a high-speed tire." *Id.*, at 3.

64. Chung discusses one method of making the hybrid tire cord includes "a) combining nylon filaments and aramid filaments and then twisting them to produce a z-twisted yarn; b) twisting 2 to 3 strands of the z-twisted yarn to produce an s-twisted yarn; c) immersing the s-twisted yarn in an adhesive solution and then drying and heat-treating it." EX1012, claim 8.

65. Chung further describes and claims certain physical properties of the disclosed hybrid tire cord:

(i) Tensile strength of 8.0 to 15.0 g/d as measured by ASTM D885;

(ii) Elongation at break of 10 to 20 as measured by ASTM D885;

(iii) Dry heat shrinkage of 2.0 to 5.0 as measured at 180°C; and

(iv) Nylon-aramid weight ratio of 10:90 to 90:10.

EX1012, claims 1 and 6.

### H. Harikae (EX1013)

66. The Japanese application that published as Harikae was filed on February 15, 2006, and published on August 30, 2007. I understand that therefore Harikae qualifies as prior art. Harikae describes and claims a radial tire with an organic fiber reinforced cover layer 7, "the organic fiber reinforced cover layer being made up of a center cover layer 71 and a shoulder cover layer 72." EX1013, Abstract.

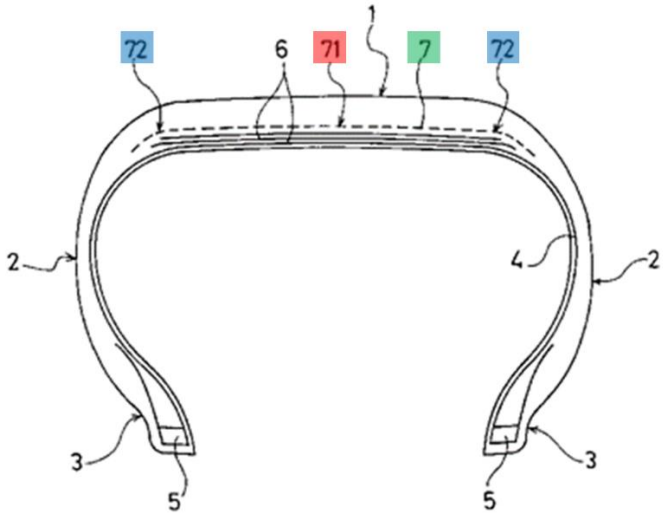


EX1013, FIG. 1 (color annotations added). The center cover layer 71 is a three-ply hybrid cord composed of two aramid fiber yarns and one nylon fiber yarn; the shoulder cover layer 72 is a two-ply hybrid cord made of aramid fiber and nylon fiber.

67. Harikae describes that "especially in the high speed range, hybrid cords of aramid fiber/nylon 66 fiber are generally superior in terms of rigidity, fatigue

resistance, low heat generation characteristics, and heat shrinkage. Harikae explains that "[t]he reason for using high modulus yarns [(i.e., aramid)] and low modulus yarns [(i.e., nylon)] in combination in each of the cover layers is to provide a single hybrid twisted cord with a good balance of cord properties such as rigidity, fatigue resistance under compression, heat generation properties, and heat shrinkage properties." EX1013, [0024].

### I. Yokokura (EX1014)

68. The PCT application that published as Yokokura was filed on June 9, 2009, and published on March 25, 2010. I understand that therefore Yokokura qualifies as prior art.

69. Yokokura describes a "tire having a reduced weight and improved durability" and a "belt-reinforcement layer [that] is constituted of reinforcing cords being para-aramid cords." EX1014, Abstract. Yokokura's tire 10 has left and right annular bead portions 11, left and right side walls 12 connected to the bead portions, a tread 13 provided between the side walls, a reinforcing carcass layer 2 composed of at least one toroidal carcass ply extending between the bead portions, and a reinforcing belt layer 3 composed of two or more belt plies 3a, 3b arranged on the outer periphery of crown of the carcass layer 2. EX1014, [0037].

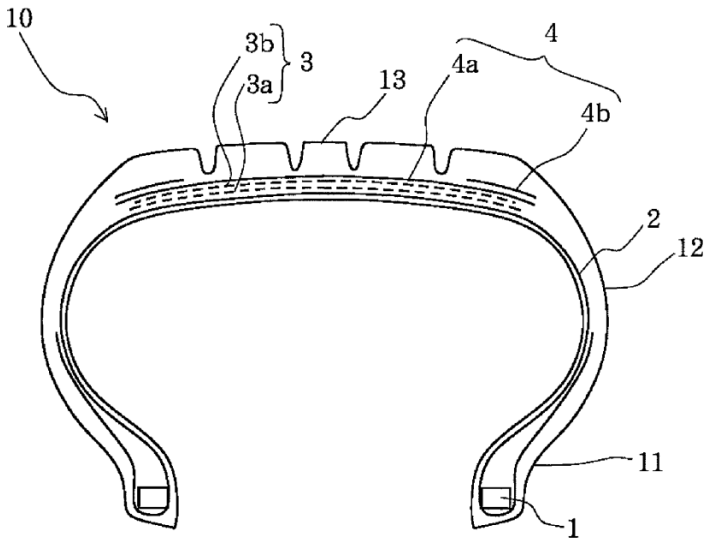


EX1014, FIG. 1.

70. According to Yokokura, this construction "provides a pneumatic tire containing a belt-reinforcement layer in the cap/layer structure described above that has high strength, a low modulus of elasticity, and excellent resistance to fatigue, in particular, excellent durability in high-speed driving." EX1014, [0023].

**J. Rowan (EX1015)**

71. The application that published as Rowan was provisionally filed on May 21, 2001, and non-provisionally filed on March 29, 2005. I understand that therefore Rowan qualifies as prior art.

72. Rowan describes "[a] method and system of manufacturing reinforcement materials for rubber products, particularly tires." EX1015, Abstract. The method comprises "twisting two or more yarns together to form a cable, and directly after twisting, applying and curing an adhering agent to the cable to form a

treated cord." *Id.* In Rowan, "machines combine the ply and twisting step into one operation, thus rendering the tire cord production process more efficient and cost effective." EX1015, [0007], [0039]. Rowan states that conventional methods of plying and twisting in two separate steps is "laborious and expensive." *Id.*, [0029]. As used in Rowan, the term "'ply' means a twisted single yarn," and "'twisting' means the number of turn about its axis per unit of length of yarn or other textile strand." *Id.*, [0028]. Moreover, in Rowan, "a 'cable' or a 'cord' means a product formed by twisting together two or more plied yarns." *Id.*

73. With reference to FIG. 4, Rowan describes a "one-machine cabled and treated cord unit ('OCT') 310," EX1015, [0045], which comprises a "direct cable subunit ('DCU') 312," *Id.*, [0046]. The machine can "combine the ply and twisting step into one operation." *Id.*, [0007]. "Yarns for producing a cable first may be processed through the DCU 312." *Id.*, [0047]. "Individual feed yarns 314 and 322 are cabled in the DCU 312." *Id.*, [0050]. The raw cabled cord 334 is forwarded to the treating subunit 328 where it is coated with an adhesion agent, such as a Resorcinal-Formaldehyde-Latex (RFL), and heated in heating unit 342. *See Id.*, [0057]. "The OCT 310 cables and treats the cord in a continuous process." *Id.*, [0045]. And "[t]he treating subunit 328 may be constructed as part of the 312." *Id.* [0064].

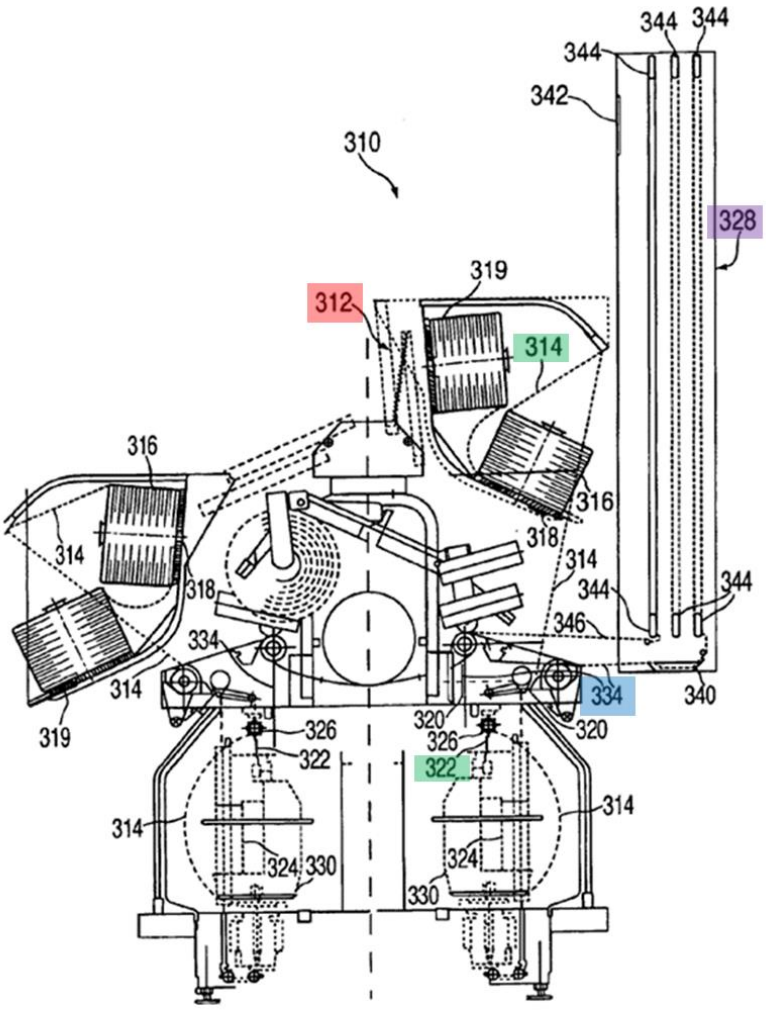


FIG. 4

EX1015, FIG. 4 (color annotations added).

## VIII. GROUNDS OF REJECTION

### A. <u>Ground 1</u>: Tamura in view of Baldwin or Baek Renders Claims 1, 2, 4, and 6-7 Obvious

#### 1. Motivation to Combine

74. In my opinion, a POSITA would have been motivated to combine Tamura's teachings of twisted aramid and nylon yarns having *the same twist number*

and the teachings of Baldwin and Baek disclosing twisted aramid and nylon yarns having *identical structures* to construct an aramid-nylon hybrid tire cords having aramid and nylon yarns with the same twist number and the same structure.

75. I am aware of several benefits of tensioning and twisting the aramid and nylon yarns such that they have the same structure. Several publications also mention these benefits. First, as Westhoff explains, "[a]s recognized by Kerawalla, it is well known in the art that the ends (i.e., individual plies) should be approximately equal in size . . . in order to obtain a balanced cord. EX1017 (Westhoff), 3:32-35; EX1016 (Kerawalla), 1:42-43. Balanced cords do not twist upon themselves when released from a spool. EX1017, 3:35-37. Notably, both Westhoff and Kerawall disclose twisting aramid and nylon yarns that have the same twist number ***and*** equal size. EX1017, 6:27-29; EX1016, 1:43-45.

76. Next, hybrid tire cords can be made faster and easier using direct cable machines, which operate at high speeds. For example, Rowan teaches that direct cable machines "combine the ply and twisting step into one operation, thus rendering the tire cord production process more efficient and cost effective." EX1015, [0007]. Direct cable machines are "designed and intended to obtain balanced cord constructions by means of rolls and brakes that control the yarn tension of the two yarn ends and therefore yields a balanced construction having a balanced configuration." EX1023, [0023]. "If one untwists a given length of a direct cabler

product, the two constituent yarns . . . will have a twist number which is equal to, and opposite in hand to, the twist number in the parent cabled cord at the given length of cord[, which] . . . will occur regardless of the coring level in the cabled cord." *Id.*

77. The non-uniform (or unbalanced) cord constructions can sometimes lead to uneven stress distribution within the tire and compromise tire performance. In my opinion, a POSITA would have appreciated that unbalanced cords have an internal torque can add stress to the tire construction because the torque is a force attempting to untwist the cord. As a result, with many torque forces acting together, the tire performance would be less stable.

78. Moreover, Tamura, Baldwin, and Baek are analogous to each other and to the '731 patent. These references each teach a tire cord comprising a twisted aramid yarn and a twisted nylon yarn that are twisted together to form a hybrid cord. And each is concerned with improving the strength, reliability, and performance of tires. EX1001, 2:49-54; EX1007, [0003]; EX1008, 4-3.

**2. Reasonable Expectation of Success**

79. In my opinion, a POSITA would have had a reasonable expectation of success in combining the teachings of Tamura with those of Baldwin or Baek. As described above, it is old and well known that a direct cable corder machine can be used to construct the nylon and aramid twisted yarns to have the identical structures. Knowing the relative mass densities of aramid and nylon, a POSITA could

determine the appropriate linear density of each yarn and the appropriate tension to apply to each yarn to ensure they have structures identical to each other when they are twisted together.

### 3. Claim-by-Claim Analysis

#### (a) Claim 1:

##### (i) [1pre]: A hybrid fiber cord comprising:

80. In my opinion, Tamura discloses or otherwise renders obvious this limitation.

81. To the extent the preamble is limiting, Tamura describes "a large-diameter rubber hose . . . reinforced by compounding fiber fabric and/or fiber cord, characterized in that the fiber fabric and/or fiber cord is composed of a composite fiber of aramid fiber and nylon fiber." EX1006, [0011], [0018] ("In the present invention, the above-mentioned aramid fibers and nylon fibers are composited to form aramid/nylon composite fiber cords and composite fiber fabrics."). A POSITA would have understood a "fiber cord [ ] composed of a composite fiber of aramid fiber and nylon fiber" to be ***a hybrid fiber cord***.

##### (ii) [1a]: a nylon primarily-twisted yarn having a first twist number of 300 to 500 TPM;

82. In my opinion, Tamura discloses or otherwise renders obvious this limitation.

83. Tamura describes that the "composite fiber cord is obtained by lower twisting a predetermined number of aramid fibers and nylon fibers, each of which is individually twisted, and then upper twisting the resulting fibers together." EX1006, [0018]. In embodiments 1 and 2 of Tamura, the nylon fibers are individually twisted between 300 and 500 twists per meter (TPM). In particular, in the first embodiment, the nylon fiber has a twist number of 36 twists/10cm (or 360 TPM), and in the second embodiment, the nylon fiber has a twist number of 31 twists/10 cm (or 310 TPM).

| | | | Number of twists (twists/10 cm) | | | |
|---|---|---|---|---|---|---|
| | | | Upper twist (S) | Lower twist (Z) | | |
| | | | | Aramid fiber | N66 | PET |
| Comparative Example | 1 | | 39 | | 39 | |
| | 2 | | 39 | | | 39 |
| Embodiment | 1 | | 36 | 36 | 36 | |
| | 2 | * * * [excerpted] | 31 | 31 | 31 | |
| | 3 | | 31 | 31 | 23 | |
| | 4 | | 32 | 32 | 32 | |
| | 5 | | 30 | 30 | 30 | |
| | 6 | | 30 | 30 | 30 | |

EX1006, TABLE 1 (excerpted and color annotations added).

**(iii) [1b]: an aramid primarily-twisted yarn having a second twist number of 300 to 500 TPM; and**

84. In my opinion, Tamura discloses or otherwise renders obvious this limitation.

85. Tamura describes that the "composite fiber cord is obtained by lower twisting a predetermined number of aramid fibers and nylon fibers, each of which is individually twisted, and then upper twisting the resulting fibers together." EX1006, [0018]. In embodiments 1 and 2 of Tamura, the aramid fibers are individually twisted between 300 and 500 twists per meter (TPM). In particular, in the first embodiment, the aramid fiber has a twist number of 36 twists/10cm (or 360 TPM), and in the second embodiment, the aramid fiber has a twist number of 31 twists/10 cm (or 310 TPM).

| | | | Number of twists (twists/10 cm) | | | |
|---|---|---|---|---|---|---|
| | | | Upper twist (S) | Lower twist (Z) | | |
| | | | | Aramid fiber | N66 | PET |
| Comparative Example | 1 | | 39 | | 39 | |
| | 2 | | 39 | | | 39 |
| Embodiment | 1 | | 36 | 36 | 36 | |
| | 2 | * * * | 31 | 31 | 31 | |
| | 3 | [excerpted] | 31 | 31 | 23 | |
| | 4 | | 32 | 32 | 32 | |
| | 5 | | 30 | 30 | 30 | |
| | 6 | | 30 | 30 | 30 | |

EX1006, TABLE 1 (excerpted and color annotations added).

**(iv) [1c]: an adhesive,**

86. In my opinion, Tamura discloses or otherwise renders obvious this limitation.

87. Tamura describes that "the composite fiber fabric and/or the composite fiber cord are immersed in ***adhesive***, dried, and heat-treated." EX1006, [0031] (emphasis added). According to Tamura, the "reinforcing layers, each of which is made of fiber fabric and/or fiber cord[,] [are] composed of aramid fibers and nylon fibers and coated on both sides with ***adhesive*** rubber." *Id.*, [0030] (emphasis added).

**(v) [1d]: wherein the first twist number is identical with the second number,**

88. In my opinion, Tamura discloses or otherwise renders obvious this limitation.

89. Tamura describes embodiments (e.g., embodiments 1 and 2) in which the first twist number (i.e., twist number for the nylon fiber) is identical with the second twist number (i.e., the twist number for the aramid fiber).

| | | | Number of twists (twists/10 cm) | | | |
|---|---|---|---|---|---|---|
| | | | Upper twist (S) | Lower twist (Z) | | |
| | | | | Aramid fiber | N66 | PET |
| Comparative Example | 1 | | 39 | | 39 | |
| | 2 | | 39 | | | 39 |
| Embodiment | 1 | | 36 | 36 | 36 | |
| | 2 | * * * | 31 | 31 | 31 | |
| | 3 | [excerpted] | 31 | 31 | 23 | |
| | 4 | | 32 | 32 | 32 | |
| | 5 | | 30 | 30 | 30 | |
| | 6 | | 30 | 30 | 30 | |

EX1006, TABLE 1 (excepted and color annotations added).

**(vi) [1e]: wherein the nylon primarily-twisted yarn and the aramid primarily-twisted yarn are secondarily-twisted together at a third twist number which is identical with the first and second twist numbers and have identical structures with each other in the hybrid fiber,**

90. In my opinion, Tamura discloses or otherwise renders obvious this limitation.

91. Tamura describes a "composite fiber cord is obtained by lower twisting [(i.e., primarily-twisting)] a predetermined number of aramid fibers and nylon fibers, each of which is individually twisted, and then upper twisting [(i.e., secondarily-twisting)] the resulting fibers together." EX1006, [0018]. According to Tamura, "the number of lower twists is usually set to be the same as the number of upper

twists." *Id.*, [0023]. Table 1 of Tamura provides the embodiments that disclose this limitation:

| | | | Number of twists (twists/10 cm) | | | |
|---|---|---|---|---|---|---|
| | | | Upper twist (S) | Lower twist (Z) | | |
| | | | | Aramid fiber | N66 | PET |
| Comparative Example | 1 | | 39 | | 39 | |
| | 2 | | 39 | | | 39 |
| Embodiment | 1 | | 36 | 36 | 36 | |
| | 2 | * * * | 31 | 31 | 31 | |
| | 3 | [excerpted] | 31 | 31 | 23 | |
| | 4 | | 32 | 32 | 32 | |
| | 5 | | 30 | 30 | 30 | |
| | 6 | | 30 | 30 | 30 | |

EX1006, TABLE 1 (excepted and color annotations added).

92. In my opinion, the '731 patent fails to explicitly disclose or define the ***full scope*** of the term "identical structures," Tamura, Baldwin, and Baek expressly teach features of the nylon and aramid yarns that would within the meaning of, and thus qualify as having, "identical structures."

- ***The nylon primarily-twisted yarn and the aramid primarily-twisted yarn have identical structures with each other in the hybrid fiber***

93. In my opinion, Tamura discloses or otherwise renders obvious this limitation.

94. Tamura further describes that the ***nylon primarily-twisted yarn*** (i.e., nylon lower twisted fiber) and the ***aramid primarily-twisted yarn*** (i.e., aramid lower

twisted fiber) ***have identical structures with each other in the hybrid fiber***, under Patent Owner's interpretation of the term "identical structures." For example, in its district court complaint (EX1025 (Third Amended Complaint), ¶ 158), Patent Owner alleges that the accused product satisfies the "identical structures" limitation because the manufacture process includes "a third step for secondarily-twisting the nylon and aramid primarily-twisted yarns together at a third twist number ***to produce a ply yarn in such a way that the nylon and aramid primarily-twisted yarns have identical structures with each other***." EX1025, ¶ 158 (emphasis added). As explained above, Tamura likewise describes a third step for secondarily-twisting the nylon and aramid primarily-twisted yarns together at a third twist number that is identical to the first and second twist number. Thus, Tamura describes the "identical structures" limitation according to Patent Owner's treatment of the term in its district court complaint.

95. Further, in my opinion a POSITA would have understood the figures provided in Baldwin and Baek to disclose a ***nylon primarily-twisted yarn*** 2 and an ***aramid primarily-twisted yarn*** 3 ***having identical structures with each other in the hybrid fiber***.

| | |
|---|---|
| 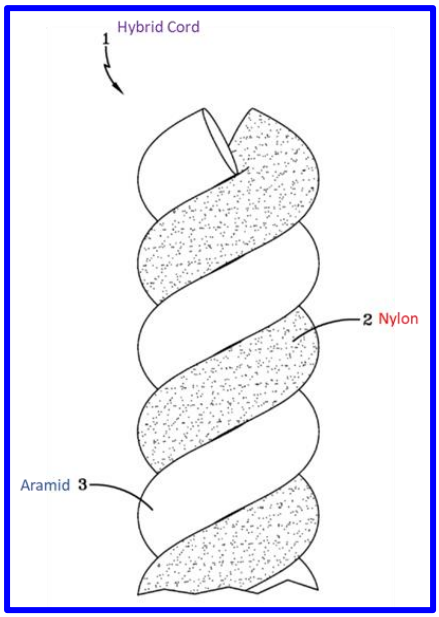 | 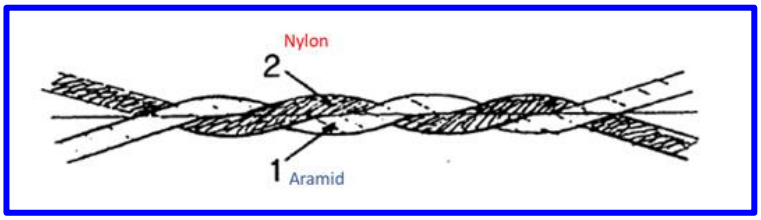 |
| EX1007 (Baldwin); FIG. 1 | EX1008 (Baek); FIG. 2 |

96. Furthermore, the '731 patent discloses that "the nylon primarily-twisted yarn 110 and aramid primarily-twisted yarn 120 can have identical structures, i.e., the ply yarn 100 can have a stable overall structure, and thus the non-uniformity of the properties and defective products that might be caused to the conventional hybrid fiber cord due to the loop and shape non-uniformity can be remarkably reduced." EX1001, 7:27-33. In my opinion, if Patent Owner argues that the term "identical structures" requires the ply yarn to have a stable overall structure, Baek expressly discloses that the "fiber cord composed of aramid and nylon ha[s] ***excellent structural stability***." EX1008, Abstract (emphasis added).

**(vii) [1f]: wherein the nylon primarily-twisted yarn and aramid primarily-twisted yarn which are secondarily-twisted together with the identical**

**twist number form a 2-ply secondarily-twisted yarn consisting of 1-ply nylon primarily-twisted yarn and 1-ply aramid primarily-twisted yarn, and**

97. In my opinion, Tamura discloses or otherwise renders obvious this limitation.

98. Tamura describes that ***the nylon primarily-twisted yarn*** (i.e., nylon lower twisted fiber) is 1-ply, ***the aramid primarily-twisted yarn*** (i.e., aramid lower twisted fiber) is 1-ply, and the ***secondarily-twisted yarn*** (i.e., nylon/aramid composite upper-twisted fiber cord) is 2-ply. *See* EX1006 at [0014]-[0018]. In the context of tires, a POSITA would have understood that the term "ply" is a term of art that can refer to a single yarn. For example, Rowan describes that "'ply' means a twisted single yarn." EX1015. Accordingly, a POSITA would have understood that a twisted fiber is 1-ply, and a twisted fiber cord made of two 1-ply fibers is a 2-ply cord.

**(viii) [1g]: wherein the secondarily-twisted yarn is coated with the adhesive, and**

99. In my opinion, Tamura discloses or otherwise renders obvious this limitation.

100. Tamura describes that "the composite fiber fabric and/or the composite fiber cord [i.e., ***the secondarily-twisted yarn***] are immersed in ***adhesive***, dried, and heat-treated." EX1006, [0031] (emphasis added). According to Tamura, the

"reinforcing layers, each of which is made of fiber fabric and/or fiber cord[,] [are] composed of aramid fibers and nylon fibers and ***coated on both sides with adhesive*** rubber." *Id.*, [0030] (emphasis added).

**(ix) [1h]: the secondarily-twisted yarn coated with the adhesive has a strength retention rate of 80% or more after a disc fatigue test is performed according to JIS-L 1017 method of Japanese Standard Association, and has a dry heat shrinkage of 1.5-2.5%.**

101. In my opinion, Tamura discloses or otherwise renders obvious this limitation.

102. Tamura describes embodiments wherein the secondarily-twisted yarn coated with the adhesive has ***a strength retention rate of 80% or more and a dry heat shrinkage of 1.5-2.5%***. As provided in TABLE 2 below, embodiment 1 of Tamura includes a strength retention rate of 90% and a dry heat shrinkage of 2.5%; and embodiment 2 includes a strength retention rate of 88% and a dry heat shrinkage of 2.4%. Note, to the extent that Patent Owner argues the prior art must disclose the entire claimed range, Federal Circuit precedent states otherwise. *See, e.g.*, *UCB, Inc. v. Actavis Labs. UT, Inc.*, 65 F.4th 679, 687 (Fed. Cir. 2023) ("If the prior art describes a point within the claimed range, the prior art anticipates the claim."); *Pfizer*, 94 F.4th at 1347 ("[W]here the general conditions of a claim are disclosed in

the prior art, it is not inventive to discover the optimum or workable ranges by routine experimentation").

| | | Properties of heat-treated adhesive | | | | | |
|---|---|---|---|---|---|---|---|
| | | Force (N/piece) | Elongation at breakage (%) | Dry heat shrinkage rate (%) | Strength (g/d) | Creep (%) | Strength retention rate after buckling (%) |
| Comparative Example | 1 | 216 | 21.0 | 5.8 | 8.7 | 4.8 | 96 |
| | 2 | 216 | 17.7 | 6.1 | 7.3 | 1.9 | 87 |
| Embodiment | 1 | 325 | 10.5 | 2.5 | 12.0 | 0.5 | 90 |
| | 2 | 326 | 8.5 | 2.4 | 12.0 | 0.5 | 88 |
| | 3 | 328 | 10.0 | 2.6 | 12.1 | 0.6 | 91 |
| | 4 | 364 | 10.7 | 3.0 | 10.9 | 0.6 | 91 |
| | 5 | 390 | 11.5 | 3.2 | 9.9 | 1.0 | 90 |
| | 6 | 556 | 7.0 | 2.0 | 14.7 | 0.5 | 90 |

EX1006, TABLE 2 (excepted and color annotations added).

103. Tamura further explains that the disclosed strength retention rates were determined ***after a disc fatigue test is performed according to JIS-L 1017 method of Japanese Standard Association***, as claimed. In particular, Tamura demonstrates that "[i]n accordance with JIS L 1017, tests were carried out on one fiber . . . and the force . . . [was] measured." EX1006, [0034]. According to Tamura, the force measured in accordance with JIS L 1017 "was converted from N units to g units,"[1]

[1] In my opinion, a POSITA would have known, as a matter of physics, that 1 Newton (N) is equal to 101.97 grams (g).

and the strength (g/d) "was calculated by dividing [the force (in grams)] by the total denier number of the fiber cord."[2] EX1006, [0034].

$$Strength\ \left(\frac{g}{d}\right) = \frac{\left[Force\ \left(\frac{g}{piece}\right)\right]}{denier\ (\frac{d}{piece})}$$

104. Next, the reinforcing fiber fabric was subjected to a bending test, "the force was measured in the same manner" as described above, and the strength after bending was calculated. EX1006, [0035]. Finally, the ***strength retention rate*** was calculated by dividing the strength after bending by the strength before bending, multiplied by 100. EX1006, [0035].

$$\boldsymbol{Strength\ Retention\ Rate} = \frac{Strength\ after\ bending}{Strength\ before\ bending}\ x\ 100$$

105. Thus, a POSITA would have understood that the strength retention rates disclosed in TABLE 2 of Tamura (including the strength retention rates for embodiments 1 and 2) were determined ***after a disc fatigue test is performed according to JIS-L 1017 method of Japanese Standard Association***, as claimed.

[2] In my opinion, a POSITA would have understood that "denier" and "decitex" are direct measures of linear density. Denier is grams per 9,000 meters of yarn, and decitex is grams per 10,000 meters of yarn. In other words, as Tamura provides, "0.9 d (denier) = 1.0 dx (decitex)." EX1006, [0034].

**(b) Claim 2: The hybrid fiber of claim 1, wherein weight ratio of the nylon primarily-twisted yarn to the aramid primarily-twisted yarn is 20:80 to 80:20.**

106. In my opinion, Tamura discloses or otherwise renders obvious this limitation.

107. Tamura describes ***a hybrid fiber*** (i.e., aramid/nylon composite fiber) ***wherein the weight ratio of the nylon primarily-twisted yarn*** (i.e., nylon lower twisted fiber) ***to the aramid primarily-twisted yarn*** (i.e., aramid lower twisted fiber) is within the range of 20:80 to 80:20. In particular, Tamura describes a range of 20:80 to 65:35, and preferably 29:71 to 56:44. *See* EX1006, [0020] ("the ratio of the fineness of the aramid fiber to the fineness of the entire aramid/nylon composite fiber cord (fineness of the aramid fiber/total fineness of the entire composite fiber x 100 (%)) is usually 35-80%, and particularly preferably 44 to 71%."). Further, TABLE 1 provides that in embodiments 1 and 2 the nylon-to-aramid weight ratio is 46.6:54.4, which falls within the claimed range.

108. Fineness, or linear density, is the weight of a material per unit length. It shows how thick or thin a fiber or yarn is. Higher fineness means heavier and thicker fibers, while lower fineness means lighter and finer ones. Common units include denier (grams per 9,000 meters) and tex (grams per 1,000 meters).

109. Notably, to the extent that Patent Owner argues the prior art must disclose the entire claimed range, Federal Circuit precedent states otherwise. *See*, Hyosung Ex. 1003, page 53

*e.g.*, *UCB*, 65 F.4th at 687 ("If the prior art describes a point within the claimed range, the prior art anticipates the claim."); *Pfizer*, 94 F.4th at 1347 ("[W]here the general conditions of a claim are disclosed in the prior art, it is not inventive to discover the optimum or workable ranges by routine experimentation").

| | | Fiber material | | | | | | Aramid fiber fineness ratio (%) | Total fineness (dt) |
|---|---|---|---|---|---|---|---|---|---|
| | | Aramid fiber | | N66 | | PET | | | |
| | | (dt) | (piece) | (dt) | (piece) | (dt) | (piece) | | |
| Comparative Example | 1 | | | 1400 | 2 | | | 0 | 2800 |
| | 2 | | | | | 1670 | 2 | 0 | 3340 |
| Embodiment | 1 | 1670 | 1 | 1400 | 1 | | | 54.4 | 3070 |
| | 2 | 1670 | 1 | 1400 | 1 | | | 54.4 | 3070 |
| | 3 | 1670 | 1 | 1400 | 1 | | | 54.4 | 3070 |
| | 4 | 1670 | 1 | 2100 | 1 | | | 44.3 | 3770 |
| | 5 | 1670 | 1 | 1400 | 2 | | | 37.4 | 4470 |
| | 6 | 1670 | 2 | 940 | 1 | | | 78.0 | 4280 |

EX1006, TABLE 1 (excerpted and color annotations added).

110. In my opinion, a POSITA would have understood that "fineness" (also known as "linear density") is weight per unit length. For example, as Carbajal explains "[t]he linear density [i.e., fineness] of a yarn or fiber is determined by weighing a known length of yarn or fiber based on procedures described in ATSM D1907-97 and D885-98." EX1026 (US 7,968,475), 7:62-65. In my opinion, a POSITA would have further understood that "decitex" is direct measure of linear

density (i.e., fineness). "Decitex or 'dtex' [or 'dt'] is defined as the weight, in grams, of 10,000 meters of the yarn or fiber." *Id.*, 7:65-67;

111. Thus, in embodiments 1 and 2, the weight (per 10,000 m) of aramid fiber is 54.4% and nylon fiber is 45.6% of the total hybrid cord. *See* EX1006, TABLE 1 (annotated above).

$$\%\ weight\ per\ 10{,}000m\ (aramid) = \frac{linear\ density\ dt\ (aramid)}{linear\ density\ dt\ (total\ cord)}\ x\ 100$$

$$54.4\% = \frac{1670\ dt}{3070\ dt}\ x\ 100$$

$$\%\ weight\ per\ 10{,}000m\ (nylon) = \frac{linear\ density\ dt\ (nylon)}{linear\ density\ dt\ (total\ cord)}\ x\ 100$$

$$45.6\% = \frac{1400\ dt}{3070\ dt}\ x\ 100$$

*See* EX1006, TABLE 1;

**(c) Claim 4**

**(i) [4pre]: A method for manufacturing a hybrid fiber cord, the method comprising:**

112. In my opinion, Tamura discloses or otherwise renders obvious this limitation. *See* limitation [4pre].

**(ii) [4a]: a first step for primarily-twisting a nylon filament at a first twist number of 300 to 500 TPM to produce a nylon primarily-twisted yarn;**

113. In my opinion, Tamura discloses or otherwise renders obvious this limitation. *See* limitation [4a].

**(iii) [4b]: a second step for primarily-twisting an aramid filament at a second twist number 300 to 500 TPM to produce an aramid primarily-twisted yarn;**

114. In my opinion, Tamura discloses or otherwise renders obvious this limitation. *See* limitation [4b].

**(iv) [4c]: a third step for secondarily-twisting the nylon and aramid primarily-twisted yarns together at a third twist number to produce a ply yarn in such a way that the nylon and aramid primarily-twisted yarns have identical structures with each other; and**

115. In my opinion, Tamura discloses or otherwise renders obvious this limitation. *See* limitation [4c].

**(v) [4d]: coating the ply yarn with an adhesive, and the ply yarn coated with the adhesive has a signal strength retention rate of 80% or more after a disc fatigue test is performed according to JIS-L 1017 method of Japanese Standard Association, and has a dry heat shrinkage of 1.5 to 2.5%,**

116. In my opinion, Tamura discloses or otherwise renders obvious this limitation. *See* limitation [4d].

**(vi) [4e]: wherein the first, second, and third twist numbers are identical with each other, and**

117. In my opinion, Tamura discloses or otherwise renders obvious this limitation. *See* limitation [4e].

**(vii) [4f]: wherein the third step produces a 2-ply secondarily-twisted yarn consisting of 1-ply of nylon primarily-twisted yarn and 1-ply of aramid primarily-twisted yarn.**

118. In my opinion, Tamura discloses or otherwise renders obvious this limitation. *See* limitation [4f].

**(d) Claim 6: The method of claim 4, wherein the step of coating the ply yarn with an adhesive comprises: submerging the yarn into an adhesive solution; drying the ply yarn having the adhesive solution impregnated therein; and heat-treating the dried ply yarn.**

119. In my opinion, Tamura discloses or otherwise renders obvious this limitation.

120. Tamura describes that "the composite fiber fabric and/or the composite fiber cord [i.e., ***the secondarily-twisted yarn***] are immersed in ***adhesive***, dried, and heat-treated. EX1006, [0031] (emphasis added). Tamura explains that "a suitable method for adhesion and heat treatment is to immerse, dry, and heat-treat in an aqueous solution of an epoxy compound . . . in the first bath . . . then immerse, dry, and heat-treat in an RFL liquid (resorcinol-formalin-latex liquid) in the second bath in the same manner to attach the adhesive. EX1006, [0031].

**(e) Claim 7: The method of claim 6, wherein the adhesive solution comprises Resorcinol – Formaldehyde - Latex adhesive.**

121. In my opinion, Tamura discloses or otherwise renders obvious this limitation.

122. Tamura describes that that "a suitable method for adhesion and heat treatment is to . . . immerse, dry, and heat-treat in an RFL liquid (***resorcinol-formalin-latex*** liquid). EX1006, [0031] (emphasis added).

## B. Ground 2: Tamura in view of Barnes Renders Obvious Claim 3

### 1. Claim Analysis

**(a) Claim 3: The hybrid fiber of claim 1, wherein the hybrid fiber cord has breaking tenacity of 8.0 to 15.0 g/d and elongation at break of 7 to 15%, the breaking tenacity and elongation at break being measured according to ASTM D885 (2004).**

123. In my opinion, Tamura alone or in view of Barnes renders obvious this limitation.

124. Tamura describes embodiments wherein the hybrid fiber cord has a ***breaking tenacity of 8.0 to 15.0 g/d***. In particular, the breaking tenacity is 12.0 g/d in embodiments 1 and 2, as provided in TABLE 2 below. In my opinion, a POSITA would have understood "strength" to be synonymous with breaking tenacity, which is the amount of force necessary to break the cord per unit of thickness.

| | | Properties of heat-treated adhesive | | | |
|---|---|---|---|---|---|
| | | Force (N/piece) | Elongation at breakage (%) | Dry heat shrinkage rate (%) | Strength (g/d) |
| Comparative Example | 1 | 216 | 21.0 | 5.8 | 8.7 |
| | 2 | 216 | 17.7 | 6.1 | 7.3 |
| Embodiment | 1 | 325 | 10.5 | 2.5 | 12.0 |
| | 2 | 326 | 8.5 | 2.4 | 12.0 |
| | 3 | 328 | 10.0 | 2.6 | 12.1 |
| | 4 | 364 | 10.7 | 3.0 | 10.9 |
| | 5 | 390 | 11.5 | 3.2 | 9.9 |
| | 6 | 556 | 7.0 | 2.0 | 14.7 |

EX1006, TABLE 2 (excerpted and color annotations added).

125. Tamura also describes embodiments wherein the hybrid fiber cord has an elongation at break of 7 to 15%. In particular, the elongation at break is 10.5% and 8.5% in embodiments 1 and 2, respectively, as provided in TABLE 2 below.

| | | Properties of heat-treated adhesive | | | |
|---|---|---|---|---|---|
| | | Force (N/piece) | Elongation at breakage (%) | Dry heat shrinkage rate (%) | Strength (g/d) |
| Comparative Example | 1 | 216 | 21.0 | 5.8 | 8.7 |
| | 2 | 216 | 17.7 | 6.1 | 7.3 |
| Embodiment | 1 | 325 | 10.5 | 2.5 | 12.0 |
| | 2 | 326 | 8.5 | 2.4 | 12.0 |
| | 3 | 328 | 10.0 | 2.6 | 12.1 |
| | 4 | 364 | 10.7 | 3.0 | 10.9 |
| | 5 | 390 | 11.5 | 3.2 | 9.9 |
| | 6 | 556 | 7.0 | 2.0 | 14.7 |

EX1006, TABLE 2 (excerpted and color annotations added).

126. Although Tamura does not expressly state that the breaking tenacity and elongation at break are measured according to ASTM D885 (2004)—to the extent this purely functional limitation is even limiting—Barnes describes that the "tenacity at break and elongation at break are measured according to ASTM D 885." EX1006, [0076]. In my opinion, elongation at break and breaking tenacity measurement methods under JIS L 1017 (EX1036) are substantially the same as those in ASTM D 885 versions 2001-2004 and 2006-2007 and would result in substantially similar measurements. (comparing EX1036 to EX1027-EX1032 (2001-2004, 2006-2007 ASTM D 885 editions).

### 2. Motivation to Combine

127. In my opinion, a POSITA would have recognized ASTM D885 as a well-established and widely accepted international standard test method for measuring breaking tenacity and elongation at break in tire cords. Thus, in my opinion a POSITA would have been motivated to utilize this industry-standard method to conduct the measurements required by Tamura.

128. Moreover, in my opinion a POSITA would have recognized Barnes' disclosure of the ASTM D885 standard to refer to the then-recent editions of it—for example, the September 2001, April 2002, November 2002, February 2003, ***October 2004***, June 2006, or July 2007 editions. And a POSITA would have known that the American Society for Testing and Material (ASTM) develops international consensus standards, including model standard test methods for tire cords. Thus, when combining the teachings of Tamura and Barnes, a POSITA would have been motivated to use (or try) any one or more of these editions of the ASTM D885 standard, including ***the 2004 edition***, as claimed. To the extent Patent Owner argues otherwise, it is my opinion that the measurement outcomes would have been the same regardless which edition was used because the 2001-2004 and 2006-2007 editions of the ASTM D 885 standard are substantially the same with respect to the breaking tenacity and elongation at break measurement methods.

#### 3. Reasonable Expectation of Success

129. In my opinion, a POSITA would have reasonably expected to successfully combine the teachings of Tamura with those of Barnes in the manner discussed above. Barnes simply provides a measurement method—ASTM D885 (2004)—for two physical properties of Tamura's reinforcement cord that Tamura already describes as having been measured, namely, breaking tenacity and elongation at break. A POSITA would have understood that this combination does not necessitate any modifications to Tamura's reinforcement cord; rather, it only involves measuring breaking tenacity and elongation at break using the standard method disclosed in Barnes.

### C. Ground 3: Tamura in View of Baldwin or Baek And Further in View of Rowan and/or Buchanan Renders Claim 5 Obvious

#### 1. Claim Analysis

##### (a) Claim 5: The method of claim 4, wherein the first, second and third steps are performed simultaneously and continuously.

130. In my opinion, Tamura in view of Baldwin or Baek and further in view of Rowan and/or Buchanan renders obvious this limitation. Tamura describes performing the first, second, and third steps, but does not explicitly provide that the three steps are performed simultaneously and continuously. I understand that during prosecution, Applicant argued that the disclosure taught "a continuous-type process, where the aramid and nylon yarns are continuously supplied and are primarily

twisted (i.e., twisting the individual yarns) and then secondarily twisting (i.e., twisting the twisted aramid and nylon yarns together), such that in a given instant, primary and secondary twisting is occurring simultaneously." EX1002 (Reply to Office Action of September 29, 2016), at 7.

131. Rowan and Buchanan (EP 0405887) each demonstrates this limitation. In particular, Rowan teaches that "[w]ith some conventional methods of tire cord manufacturing, . . . a ring twist machine [ ] produce[s] a cable in two steps, commonly known as the 'ring twist process.'" EX1015, [0028]. "The yarn is twisted into a ply" and "thereafter, the ply is . . . twisted into a cable of two or more plies with twisting equipment." *Id.* Because "this two-step ring twist process is laborious and expensive," *Id.*, [0029], Rowan demonstrates "machines [that] combine the ply and twisting step into one operation, thus rendering the tire cord production process more efficient and cost effective." EX1015, [0007], [0039].[3]

132. With reference to FIG. 4, Rowan describes a "one-machine cabled and treated cord unit ('OCT') 310," EX1015, [0045], which comprises a "direct cable subunit ('DCU') 312," *Id.*, [0046]. "Yarns for producing a cable first may be

[3] As used in Rowan, the term "'ply' means a twisted single yarn," and "'twisting' means the number of turn about its axis per unit of length of yarn or other textile strand." EX1015, [0028]. Further, in Rowan, "a 'cable' or a 'cord' means a product formed by twisting together two or more plied yarns." EX1015, [0029].

processed through the DCU 312." *Id.*, [0047]. "Individual feed yarns 314 and 322 are cabled in the DCU 312." *Id.*, [0050]. The machine can "combine the ply and twisting step into one operation." *Id.*, [0007]. The raw cabled cord 334 is forwarded to the treating subunit 328 where it is coated with an adhesion agent, such as a Resorcinal-Formaldehyde-Latex (RFL), and heated in heating unit 342. *See Id.*, [0057]. "The OCT 310 cables and treats the cord in a continuous process." *Id.*, [0045]. And "[t]he treating subunit 328 may be constructed as part of the 312." *Id.* [0064].

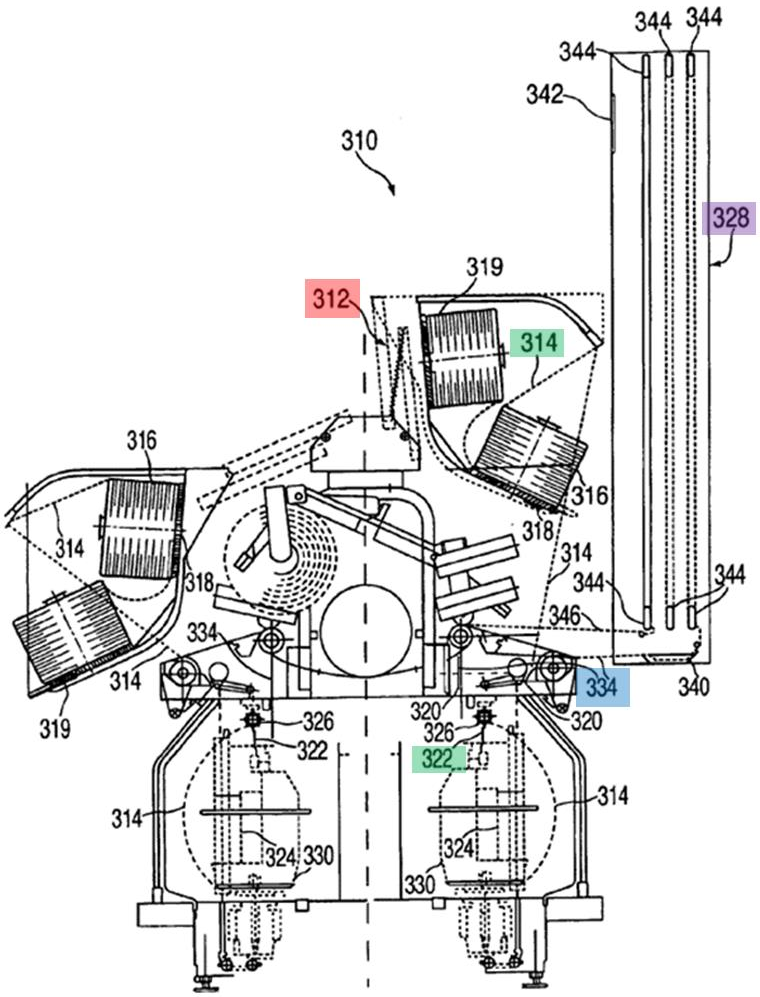


FIG. 4

EX1015, FIG. 4 (color annotations added).

Moreover, to the extent Patent Owner asserts that Rowan's Figures 4 and 5 do not depict the primary twisting (even though such primary twisting is described in Rowan's specification), a POSITA would have considered it obvious for a single apparatus to continuously and simultaneously perform such primary twisting in view of Buchanan's teachings discussed below. A POSITA would understand that simultaneity in the primary twisting of the yarns is needed in order that they are

ready to be secondarily twisted to form a cord in Rowan's continuous process that lacks "intermediate take-up." *Id.*; Ex. 1007, Abstract. If the yarns are not twisted at the same time, then the apparatus could not "treat[] the cord in a continuous process without intermediate take-up" as required by Rowan. Ex. 1007, [0011].

133. Buchanan describes "a method of plying yarns to obtain a composite yarn." EX1010, 1:28-30. Per Buchannan, twists are "simultaneously applied to twist the [yarn] strands [10] and ply the strands of each multi-stranded bundle [40] together." *Id.*, 1:36-39. "By the time the converged strands pass the twisting apparatus 32, a pair of twisted bundles 40 of strands is created." *Id.*, 3:45-47. The bundles 40 converge in the compression tube 38 and "ply together in a direction of twist . . . which is opposite to the bundle direction of twist," forming the composite yarn 42. *Id.*, 3:50-4:5.

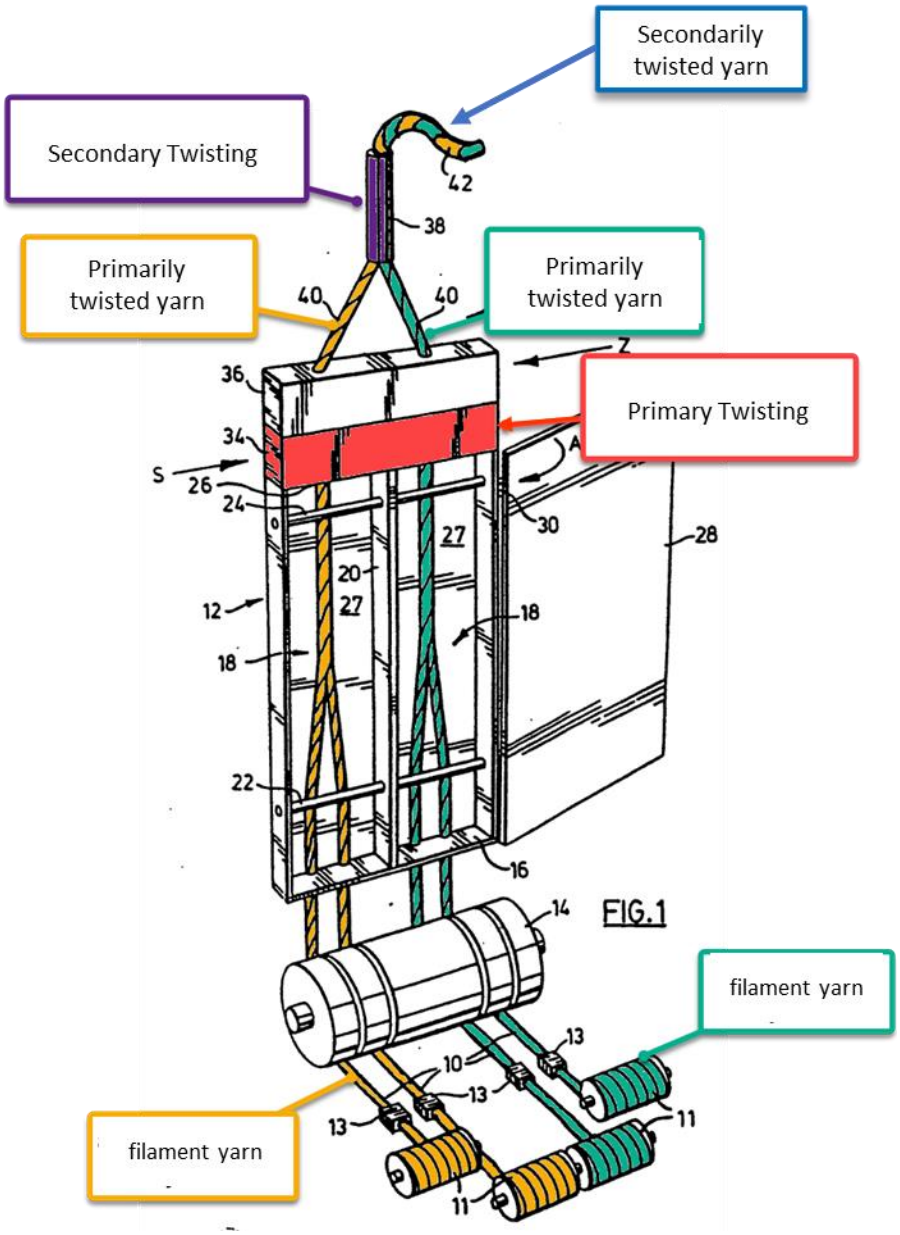


EX1010 (Buchanan), FIG. 1 (color annotations added).

### 2. Motivation to Combine

134. In my opinion, a POSITA would have been motivated to continuously and simultaneously perform the first, second, and third steps (disclosed in Tamura) continuously and simultaneously, as disclosed in Rowan and Buchanan, to create

time and cost efficiencies. For example, Rowan explains "[t]hese machines combine the ply and twisting step into one operation, thus rendering the tire cord production process more efficient and cost effective." EX1015 (Rowan), [0007]. Moreover, in my opinion, it would have been obvious to a POSITA to make multiple tire cords in a continuous manner. Doing such steps separately "involve[s] a number of individual steps and multiple transfers of product," which are "labor and cost intensive." *Id.*, [0006]. Another benefit is that a continuous process "produce[s] larger package sizes and improve quality by requiring fewer knows or splices in the final cord product." *Id*. Other references also teach the benefits of using a continuous and simultaneous process. For example, Fritsch describes "a direct cabling machine" that can "operate at considerably higher speeds (30-50% greater) than conventional ring twisters," because they "complete the production of cabled cord in one step whereas ring twisters require two steps." *Id*., ¶23. Similarly, Osbourne discloses creating an aramid-nylon cord "made from two identical aramid yarns ... individually twisted ... in a first direction and from one yarn ... twisted ... in the same direction, these three yarns being further ***simultaneously*** twisted ... in the opposite direction." EX1011, [0075] (emphasis added).

### 3. Reasonable Expectation of Success

135. In my opinion, a POSITA would have reasonably expected to successfully combine the teachings of Tamura with Rowan or Buchanan in the

manner discussed above because each reference demonstrates a reinforcement cord and a POSITA would have recognized the modifications required by the combination to be mechanical and well within his knowledge and skill set. For instance, integrating the Z and S twisting steps into a single process—where "the aramid and nylon yarns are continuously supplied and are primarily twisted (i.e., twisting the individual yarns) and then secondarily twisted (i.e., twisting the twisted aramid and nylon yarns together), such that in a given instant, primary and secondary twisting is occurring simultaneously," EX1002 (Reply to Office Action of September 29, 2016, at 7)—would involve only mechanical modifications to the equipment used for manufacturing Tamura's reinforcement cords.

### D. Ground 4: Chung In view of Harikae and Moreover in view of Yokokura Renders Claims 1-4 and 6-7 Obvious

#### 1. Motivation to Combine

136. In my opinion, a POSITA would have been motivated to combine the teachings of Chung with Harikae and Yokokura, as detailed below.

137. First, Chung, Harikae, and Yokokura are analogous to both the challenged patent and to one another. All four—Chung, Harikae, Yokokura, and the challenged patent—fall within the same field of endeavor, namely, tire reinforcement cords and/or methods for manufacturing them. Additionally, they are all reasonably pertinent to the same problem addressed by the inventors of the '731

patent: optimizing the performance and physical properties of nylon-aramid hybrid reinforcement cords. *See, e.g.*, EX1001, 2:55-61 (seeking "to provide a method for easily manufacturing a hybrid fiber cord comprising a nylon filament and an aramid filament, which has more uniform physical properties and better strength and fatigue resistance"); EX1012 (Chung) (aiming "to provide a hybrid tire cord . . . having excellent shrinkage force . . . [and] high modulus characteristics"); EX1013 (Harikae), [0024] (seeking "to provide a single hybrid twisted cord with a good balance of cord properties such as rigidity, fatigue resistance under compression, heat generation properties, and heat shrinkage properties"); EX1014 (Yokokura), [0023] (describing "a pneumatic tire containing a belt-reinforcement layer in the cap/layer structure described above that has high strength, a low modulus of elasticity, and excellent resistance to fatigue, in particular, excellent durability in high-speed driving.").

138. Second, to the extent that the Patent Owner contends Chung does not disclose that the nylon filament, aramid filament, and hybrid nylon-aramid cord have the same twist number, Harikae provides that teaching. A POSITA would have been motivated to modify Chung's cord to adopt the same twist number for each individual nylon and aramid filament, as disclosed in Harikae. As Chung explains, "because each s-twisted yarn has the same physical properties, twisting defects do not occur" and "[a]s a result, the properties of the final hybrid tire cord, such as

strength and modulus, are greatly improved, and productivity is increased because twisting defects rarely occur." EX1012, 6; Additionally, Kerawalla states that "[a]s is well known in the art, the ends [(i.e., individual plies)] should be approximately equal in size in order to obtain a balanced cord." EX1016 (US 3977172), 1:41-43. Kerawalla further explains that "[e]ach of the plies is twisted in the same direction and the combined ends are twisted approximately the same amount in the opposite direction." *Id.*, 1:43-45 (emphasis added). According to Kerawalla, this method results in a "cabled yarn that exhibits a modest shrinkage adequate to prevent wavy cord and loose bead turn-ups in bias type tires." *Id.*, 1:49-52.

139. Third, if the Patent Owner argues that Chung does not disclose that the secondarily twisted (i.e., s-twisted) yarn achieves a strength retention rate of 80% or more after undergoing a disc fatigue test according to the JIS-L 1017 method of the Japanese Standard Association, Yokokura provides this teaching. A POSITA would have been motivated to modify the cord of Chung and Harikae in view of Yokokura. As Yokokura explains, "[t]he higher the retention ratio is[,] the better the test result is." EX1014, [0082]. Furthermore, Kwon emphasizes the importance of a high strength retention rate, stating that if a tire cord's strength retention does not exceed 90%, "the ability to support the tire is reduced due to deterioration of physical properties during driving, resulting in deterioration of driving performance and, in severe cases, tire rupture." EX1021, [139].

### 2. Reasonable Expectation of Success

140. In my opinion, a POSITA would have reasonably expected to be able to successfully combine the teachings of Chung, Harikae, and Yokokura in the matter described below. Chung, Harikae, and Yokokura are each related to a reinforcement cord, and a POSITA would have recognized the modifications required by the combination to be mechanical and well within his knowledge and skill set. E.g., twisting the nylon filament, aramid filament, and hybrid cord the same number of times, as disclosed in Chung and Harikae would require mere mechanical modifications to the equipment used to manufacture the reinforcement cords of Chung in view of Harikae.

141. In addition, performing a disc fatigue test (i.e., driving test on a drum) is according to the JIS-L 1017 method of Japanese Standard Association to measure a strength retention rate is old and well known within the art. Moreover, the disk fatigue test process set forth in JIS-L 1017 is well within the skill set of an ordinary artisan. Finally, achieving a strength retention rate of 80% or more would have been a matter of routine optimization, using standard procedures, rendering predictable results.In my opinion, a POSITA would have considered a high strength retention rate to be optimal, and would have tried to attain it via routine experimentation. EX1014 (Yokokura), [0082] ("[t]he higher the retention ratio is[,] the better the test result is"); EX1021 (Kwon), [139] (disclosing that if the strength retention rate of a

tire cord does not exceed 90%, "the ability to support the tire is reduced due to deterioration of physical properties during driving, resulting in deterioration of driving performance and, in severe cases, tire rupture").

### 3. Claim-by-Claim Analysis

#### (a) Claim 1:

##### (i) [1pre]: A hybrid fiber cord comprising:

142. In my opinion, Chung in view of Harikae or in further view of Yokokura renders obvious this limitation.

143. To the extent the preamble is limiting, Chung describes a "***hybrid tire cord*** and a method for manufacturing the same, and more particularly, to a hybrid tire cord in which nylon filaments and aramid filaments are combined." EX1012, Abstract. In my opinion, a POSITA would have recognized a "tire cord in which nylon filaments and aramid filaments are combined" to be a ***fiber*** cord. As Chung demonstrates, "[a]ramid filaments . . . are mainly used as ***fibers***." EX1012, 4 (emphasis added). Chung likewise demonstrates that the aramid-nylon hybrid tire cord is made with a strong bond between the ***fibers***. *See* EX1012, 5 ("The extension of the fibers that occurs during this twisting process combines with the tension of the fibers to increase the pressure in the inward direction of the fibers, thereby increasing the friction between the fibers, and thus making it possible to manufacture a hybrid tire cord with a strong bond between the fibers.").

**(ii) [1a]: a nylon primarily-twisted yarn having a first twist number of 300 to 500 TPM;**

144. In my opinion, Chung in view of Harikae or in further view of Yokokura renders obvious this limitation.

145. Chung describes a nylon primarily-twisted yarn having a first twist number of 300 to 500 TPM. In particular, Chung demonstrates that "when the total fineness of the nylon filament is 840 denier, the appropriate twist count is 470 TPM (Twist Per Meter), and when it is 1890 denier, the appropriate twist count is 300 TPM. Thus, the hybrid tire cord according to the present invention has a twist count in the range of 300 to 500 TPM. EX1012, 5 (emphasis added).

**(iii) [1b]: an aramid primarily-twisted yarn having a second twist number of 300 to 500 TPM; and**

146. In my opinion, Chung in view of Harikae or in further view of Yokokura renders obvious this limitation.

147. Chung describes an aramid primarily-twisted yarn having a first twist number of 300 to 500 TPM. In particular, Chung demonstrates that "since the two types of filaments have similar structures, the twist count of the hybrid tire cord follows the fineness of nylon" and "it is desirable that the fineness of the aramid filament also has the same or similar range as that of the nylon filament." EX1012, 5.

148. However, to the extent Patent Owner contends that Chung does not expressly show that the aramid primarily twisted yarn has a twist number between 300 and 500 TPM, Harikae provides this teaching.

149. Harikae describes a pneumatic radial tire (FIG. 1) with a tread portion 1 and a carcass layer 4. EX1013, [0020]. Harikae states the outer circumferential side of the carcass layer 4 includes an organic fiber reinforcing layer 7 composed of a center cover layer 71 and a shoulder cover layer 72. EX1013, [0021]-[0022].

[FIG. 1]

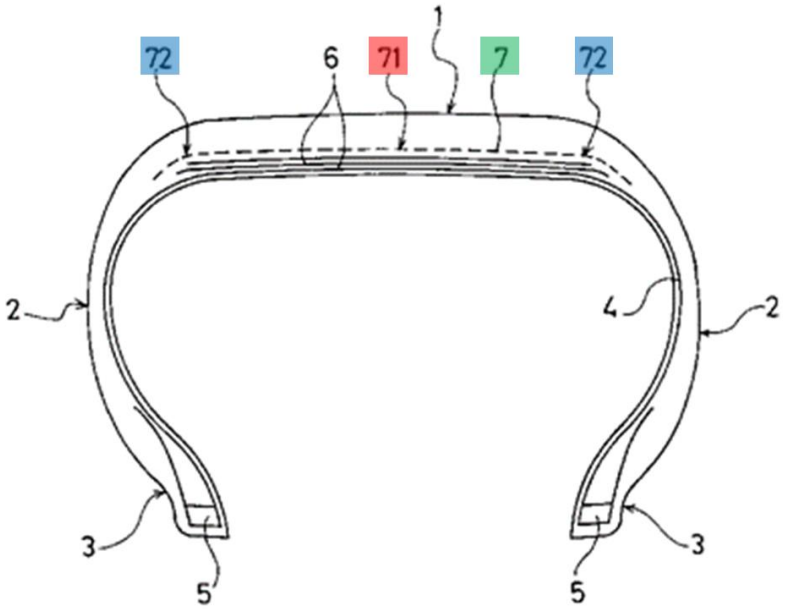


EX1013, FIG 1 (color annotations added). Harikae states "the shoulder cover layer 72 is constructed using a two-ply composite cord formed by twisting together one high elasticity yarn and one low elasticity yarn that are each twisted in the same direction." EX1013, [0023]. In particular, the shoulder cover layer 72 is made of B: "A two-ply hybrid cord made of aramid fiber 1670 dtex yarn and nylon 66 fiber

1400 dtex yarn." EX1013, [0039]. Per Harikae the nylon and aramid fibers in the two-ply hybrid cord of the shoulder cover layer 72 each have a twist number within the range of 300-500 TPM, with specific embodiments disclosing 300 TPM (Embodiment 9), 380 TPM (Embodiments 4-7 and 10), and 410 TPM (Embodiment 11):

[Table 2]

| | Embodiment 4 | Embodiment 5 | Embodiment 6 | Embodiment 7 | Embodiment 8 | Embodiment 9 | Embodiment 10 | Embodiment 11 |
|---|---|---|---|---|---|---|---|---|
| Center cover layer | | | | | | | | |
| Cord structure (yarn combination) | A | A | A | A | A | A | A | A |
| Total fineness (dtex) | 4740 | 4740 | 4740 | 4740 | 4740 | 4740 | 4740 | 4740 |
| High modulus yarn twist count (twists/10cm) | 22 | 25 | 31 | 34 | 28 | 28 | 28 | 28 |
| Low modulus yarn twist count (twists/10cm) | 22 | 25 | 31 | 34 | 28 | 28 | 28 | 28 |
| Number of twists (twists/10cm) | 22 | 25 | 31 | 34 | 28 | 28 | 28 | 28 |
| Upper twist factor | 1515 | 1721 | 2134 | 2341 | 1928 | 1928 | 1928 | 1928 |
| Driving density (lines / 50 mm) | 45 | 45 | 45 | 45 | 45 | 45 | 45 | 45 |
| Code diameter (mm) | 0.9 | 0.9 | 0.9 | 0.9 | 0.9 | 0.9 | 0.9 | 0.9 |
| Ply gauge (mm) | 1.4 | 1.4 | 1.4 | 1.4 | 1.4 | 1.4 | 1.4 | 1.4 |
| Shoulder cover layer | | | | | | | | |
| Cord structure (yarn combination) | B | B | B | B | B | B | B | B |
| Total fineness (dtex) | 3070 | 3070 | 3070 | 3070 | 3070 | 3070 | 3070 | 3070 |
| High modulus yarn twist count (twists/10cm) | 38 | 38 | 38 | 38 | 27 | 30 | 38 | 41 |
| Low modulus yarn twist count (twists/10cm) | 38 | 38 | 38 | 38 | 27 | 30 | 38 | 41 |
| Number of twists (twists/10cm) | 38 | 38 | 38 | 38 | 27 | 30 | 38 | 41 |

EX1020, TABLE 2 (excerpted and color annotations added) (note: 1 twist per 10cm = 10 twists per meter (TPM)).

150. In my opinion, a POSITA would have been motivated to combine the teachings of Chung and Harikae to construct the nylon/hybrid cord such that aramid fiber has a twist number that falls within the range of 300 to 500 TPM, like the nylon fiber. A POSITA would have recognized that "the level of twisting is one of the crucial points for hybrid cord property optimization." EX1033 (Yilmaz, *Aramid-Nylon 6.6 Hybrid Cords and Investigation of Their Properties*, Rubber Chemistry

and Technology, Vol., 85, No. 2, pp. 180-194 (2012)), 185. And, as Chung explains, "because each s-twisted yarn has the same physical properties, twisting defects do not occur" and "[a]s a result, the properties of the final hybrid tire cord, such as strength and modulus, are greatly improved, and productivity is increased because twisting defects rarely occur." EX1012, 6.

151. Moreover, in my opinion a POSITA would have appreciated that the lower the twist number for aramid filaments, the lower the elongation at break, which reduces the fatigue resistance of the tire cord; and the higher the twist number, the lower the strength of the tire cord. EX1012 (Chung), 5 ("In general, as the twist count of fibers increases, the strength decreases but the fatigue performance increases, and conversely, as the twist count decreases, the strength increases but the fatigue performance decreases."); EX1021 (Kwon (WO 2009/134063)), [121] ("If the [ ] twist count is less than [200 TPM], the breaking strength of the cabled yarn is high, but the elongation at break is low, which reduces the fatigue resistance of the tire cord."). "On the other hand, if the [ ] twist count exceeds [600 TPM] the strength of the tire cord is excessively reduced." EX1021 (Kwon (WO 2009/134063)), [121]. In my opinion, a POSITA would have been motivated to choose the range of 300-500 TPM because it falls outside of the problematic lower (200 TPM and lower) and upper (600 TPM and higher) boundaries disclosed in Kwon.

**(iv) [1c]: an adhesive,**

152. In my opinion, Chung in view of Harikae or in further view of Yokokura renders obvious this limitation.

153. Chung describes "immersing the s-twisted yarn in an adhesive solution." EX1012, 4. Chung states "[t]he adhesive solution used as the above adhesive is not particularly limited in the present invention, and an RFL solution (Resorcinol Formaldehyde Latex), which is an impregnation solution for tire cords commonly used in this field, or an epoxy-based adhesive composition solution, etc. can be used." EX1012, 6.

**(v) [1d]: wherein the first twist number is identical with the second number,**

154. In my opinion, Chung in view of Harikae or in further view of Yokokura renders obvious this limitation.

155. Chung describes that the first and second twist number are identical. In particular, Chung demonstrates that "since the two types of filaments have similar structures, the twist count of the hybrid tire cord follows the fineness of nylon" and "it is desirable that the fineness of the aramid filament also has the same or similar range as that of the nylon filament." EX1012, 5.

156. However, to the extent Patent Owner argues that Chung does not expressly teach that the nylon yarn and aramid yarn have the same twist number, Harikae provides this teaching. Per Harikae the nylon and aramid fibers in the two-

ply hybrid cord of the shoulder cover layer 72 have the same twist number: 300 TPM (Embodiment 9), 380 TPM (Embodiments 4-7 and 10), and 410 TPM (Embodiment 11):

[Table 2]

| | Embodiment 4 | Embodiment 5 | Embodiment 6 | Embodiment 7 | Embodiment 8 | Embodiment 9 | Embodiment 10 | Embodiment 11 |
|---|---|---|---|---|---|---|---|---|
| Center cover layer | | | | | | | | |
| Cord structure (yarn combination) | A | A | A | A | A | A | A | A |
| Total fineness (dtex) | 4740 | 4740 | 4740 | 4740 | 4740 | 4740 | 4740 | 4740 |
| High modulus yarn twist count (twists/10cm) | 22 | 25 | 31 | 34 | 28 | 28 | 28 | 28 |
| Low modulus yarn twist count (twists/10cm) | 22 | 25 | 31 | 34 | 28 | 28 | 28 | 28 |
| Number of twists (twists/10cm) | 22 | 25 | 31 | 34 | 28 | 28 | 28 | 28 |
| Upper twist factor | 1515 | 1721 | 2134 | 2341 | 1928 | 1928 | 1928 | 1928 |
| Driving density (lines / 50 mm) | 45 | 45 | 45 | 45 | 45 | 45 | 45 | 45 |
| Code diameter (mm) | 0.9 | 0.9 | 0.9 | 0.9 | 0.9 | 0.9 | 0.9 | 0.9 |
| Ply gauge (mm) | 1.4 | 1.4 | 1.4 | 1.4 | 1.4 | 1.4 | 1.4 | 1.4 |
| Shoulder cover layer | | | | | | | | |
| Cord structure (yarn combination) | B | B | B | B | B | B | B | B |
| Total fineness (dtex) | 3070 | 3070 | 3070 | 3070 | 3070 | 3070 | 3070 | 3070 |
| High modulus yarn twist count (twists/10cm) | 38 | 38 | 38 | 38 | 27 | 30 | 38 | 41 |
| Low modulus yarn twist count (twists/10cm) | 38 | 38 | 38 | 38 | 27 | 30 | 38 | 41 |
| Number of twists (twists/10cm) | 38 | 38 | 38 | 38 | 27 | 30 | 38 | 41 |

EX1020, TABLE 2 (excerpted and color annotations added) (note: 1 twist per 10cm = 10 twists per meter (TPM)).

157. In my opinion, POSITA would have been motivated to combine the teachings of Chung and Harikae such that the nylon filament and aramid filament have the same twist number, as Chung explains, "because each s-twisted yarn has the same physical properties, twisting defects do not occur" and "[a]s a result, the properties of the final hybrid tire cord, such as strength and modulus, are greatly improved, and productivity is increased because twisting defects rarely occur." EX1012m 6;

158. In addition, Kerawalla provides that "[a]s is well known in the art, the ends [(i.e., individual plies)] should be approximately equal in size in order to obtain

a balanced cord." EX1016 (US 3977172), 1:41-43. Kerawalla also states that "[e]ach of the plies is twisted in the same direction and the combined ends are ***twisted approximately the same amount*** in the opposite direction." *Id.*, 1:43-45 (emphasis added). Kerawalla states this process creates a "cabled yarn that exhibits a modest shrinkage adequate to prevent wavy cord and loose bead turn-ups in bias type tires." *Id.*, 1:49-52.

**(vi) [1e]: wherein the nylon primarily-twisted yarn and the aramid primarily-twisted yarn are secondarily-twisted together at a third twist number which is identical with the first and second twist numbers and have identical structures with each other in the hybrid fiber,**

159. In my opinion, Chung in view of Harikae or in further view of Yokokura renders obvious this limitation.

160. Chung describes that the nylon primarily-twisted yarn (i.e., nylon z-twisted yarn) and the aramid primarily-twisted yarn (i.e., aramid z-twisted yarn) are secondarily-twisted (s-twisted) together at a third twist number which is identical with the first and second twist numbers. In particular, Chung demonstrates that "[s]ince the hybrid tire cord of the present invention has similar strength and fatigue performance according to twisting since the two types of filaments have similar structures, the twist count of the hybrid tire cord follows the fineness of nylon." EX1012, 5. For instance, when the total fineness of the nylon filament is 840 denier,

the appropriate twist count is 470 TPM (Twist Per Meter), and when it is 1890 denier, the appropriate twist count is 300 TPM. *See Id.* ***Accordingly, the hybrid tire cord according to the present invention has a twist count in the range of 300 to 500 TPM***. It is desirable that the fineness of the aramid filament also has the same or similar range as that of the nylon filament.

161. As explained above, to the extent that Patent Owner contends that Chung does not expressly teach that the primarily-twisted yarns have the same twist number as the secondarily-twisted yarn, Harikae describes this limitation. According to Harikae, the nylon and aramid fibers in the two-ply hybrid cord of the shoulder cover layer 72 have the same twist number as the two-ply hybrid cord: 300 TPM (Embodiment 9), 380 TPM (Embodiments 4-7 and 10), and 410 TPM (Embodiment 11):

[Table 2]

| | Embodiment 4 | Embodiment 5 | Embodiment 6 | Embodiment 7 | Embodiment 8 | Embodiment 9 | Embodiment 10 | Embodiment 11 |
|---|---|---|---|---|---|---|---|---|
| Center cover layer | | | | | | | | |
| Cord structure (yarn combination) | A | A | A | A | A | A | A | A |
| Total fineness (dtex) | 4740 | 4740 | 4740 | 4740 | 4740 | 4740 | 4740 | 4740 |
| High modulus yarn twist count (twists/10cm) | 22 | 25 | 31 | 34 | 28 | 28 | 28 | 28 |
| Low modulus yarn twist count (twists/10cm) | 22 | 25 | 31 | 34 | 28 | 28 | 28 | 28 |
| Number of twists (twists/10cm) | 22 | 25 | 31 | 34 | 28 | 28 | 28 | 28 |
| Upper twist factor | 1515 | 1721 | 2134 | 2341 | 1928 | 1928 | 1928 | 1928 |
| Driving density (lines / 50 mm) | 45 | 45 | 45 | 45 | 45 | 45 | 45 | 45 |
| Code diameter (mm) | 0.9 | 0.9 | 0.9 | 0.9 | 0.9 | 0.9 | 0.9 | 0.9 |
| Ply gauge (mm) | 1.4 | 1.4 | 1.4 | 1.4 | 1.4 | 1.4 | 1.4 | 1.4 |
| Shoulder cover layer | | | | | | | | |
| Cord structure (yarn combination) | B | B | B | B | B | B | B | B |
| Total fineness (dtex) | 3070 | 3070 | 3070 | 3070 | 3070 | 3070 | 3070 | 3070 |
| High modulus yarn twist count (twists/10cm) | 38 | 38 | 38 | 38 | 27 | 30 | 38 | 41 |
| Low modulus yarn twist count (twists/10cm) | 38 | 38 | 38 | 38 | 27 | 30 | 38 | 41 |
| Number of twists (twists/10cm) | 38 | 38 | 38 | 38 | 27 | 30 | 38 | 41 |

EX1020, TABLE 2 (excerpted and color annotations added) (note: 1 twist per 10cm = 10 twists per meter (TPM)).

Hyosung Ex. 1003, page 81

162. In my opinion, a POSITA would have been motivated to combine the teachings of Chung and Harikae such that the nylon filament (z-twist), aramid filament (z-twist), and hybrid cord (s-twist) have the same twist number, as Chung explains, "because each s-twisted yarn has the same physical properties, twisting defects do not occur" and "[a]s a result, the properties of the final hybrid tire cord, such as strength and modulus, are greatly improved, and productivity is increased because twisting defects rarely occur." EX1012 (Chung), 6.

163. Kerawalla states that "[a]s is well known in the art, the ends [(i.e., individual plies)] should be approximately equal in size in order to obtain a balanced cord." EX1016 (US 3977172), 1:41-43. Kerawalla also states that "[e]ach of the plies is twisted in the same direction and the combined ends are ***twisted approximately the same amount*** in the opposite direction." *Id.*, 1:43-45 (emphasis added). Kerawalla states this process creates a "cabled yarn that exhibits a modest shrinkage adequate to prevent wavy cord and loose bead turn-ups in bias type tires." *Id.*, 1:49-52.

- ***nylon primarily-twisted yarn and the aramid primarily-twisted yarn . . . have identical structures with each other in the hybrid fiber***

164. In my opinion, Chung in view of Harikae or in further view of Yokokura renders obvious this limitation.

165. Chung describes that "the two types of filaments have ***similar*** structures." EX1019, 5 (emphasis added). Although the challenged claims requires "***identical*** structures," under Patent Owner's interpretation of the term "identical structures," Chung alone or in view of Harikae describes this limitation. In its district court complaint (EX1025 (Third Amended Complaint for Patent Infringement), ¶ 158), I understand Patent Owner argued that the accused product satisfies the "identical structures" limitation because the manufacture process includes "a third step for secondarily-twisting the nylon and aramid primarily-twisted yarns together at a third twist number ***to produce a ply yarn in such a way that the nylon and aramid primarily-twisted yarns have identical structures with each other***. EX1025, ¶ 158 (emphasis added). As explained above, Chung alone or combined with Harikae likewise describes a third step for secondarily-twisting the nylon and aramid primarily-twisted yarns together at a third twist number that is identical to the first and second twist number. Thus, Chung alone or in view of Hariage describes the "identical structures" limitation, at least under Patent Owner's treatment of the term in its district court complaint. Furthermore, due to the nature of textiles, in my opinion a POSITA considering Chung would not have drawn a substantive distinction between "similar structures" and "identical structures." Textiles (e.g., fibers, filaments, yarn, etc.), like most natural or synthetic materials, are not an exact science. Thus, a POSITA at the time of the '731 patent would have

understood that no two textiles are 100 percent identical due to the inherent nature of the materials. For instance, the ’731 patent acknowledges that the nylon and aramid primarily-twisted yarns “have structures ***substantially identical*** with each other as illustrated in FIG. 2.” EX1001, 7:34-39 (emphasis added).

**(vii) [1f]: wherein the nylon primarily-twisted yarn and aramid primarily-twisted yarn which are secondarily-twisted together with the identical twist number form a 2-ply secondarily-twisted yarn consisting of 1-ply nylon primarily-twisted yarn and 1-ply aramid primarily-twisted yarn, and**

166. In my opinion, Chung in view of Harikae or in further view of Yokokura renders obvious this limitation.

167. Chung describes that ***1-ply nylon primarily-twisted yarn*** (i.e., nylon z-twisted yarn) and ***1-ply aramid primarily-twisted yarn*** (i.e., aramid z-twisted yarn) ***form a 2-ply secondarily-twisted hybrid nylon-aramid yarn*** (i.e., s-twisted yarn). In particular, Chung describes that at least in comparative examples 3 and 4, “[a] tire cord was manufactured . . . [such] that nylon 66 and p-aramid filaments . . . were subject to a twisting process to manufacture nylon 66 z-twisted yarn and p-aramid z-twisted yarn, and then a combining process was performed.” EX1012, 7. Chung describes that although “preferably, the nylon filaments and the aramid filament are double- or triple-***plied***,” the z-twisted nylon yarn and z-twisted aramid yarn are each a “strand,” *Id.* at 4, which a POSITA would understand to have 1-ply.

168. In the context of tires, a POSITA would have recognized that the word "ply" is a term of art that can refer to a single yarn. For example, Rowan provides " 'ply' means a twisted single yarn." EX1015. Accordingly, a POSITA would have recognized that a twisted fiber is 1-ply, and a twisted fiber cord made of two 1-ply fibers is a 2-ply cord.

**(viii) [1g]: wherein the secondarily-twisted yarn is coated with the adhesive, and**

169. In my opinion, Chung in view of Harikae or in further view of Yokokura renders obvious this limitation.

170. Chung describes that ***the secondarily-twisted yarn*** (i.e., s-twisted yarn) ***is coated with the adhesive***. At least claim 9 of Chung states: "A method for manufacturing a hybrid tire cord, comprising the steps of a) twisting nylon filaments and aramid filaments to produce a z-twisted yarn; b) combining 2 to 3 strands of the z-twisted yarn to produce an s-twisted yarn; c) ***immersing the s-twisted yarn in an adhesive*** solution and then drying and heat-treating it." EX1012, 2 (emphasis added). This method is also shown in Drawing 2 of Chung.

Drawing 2

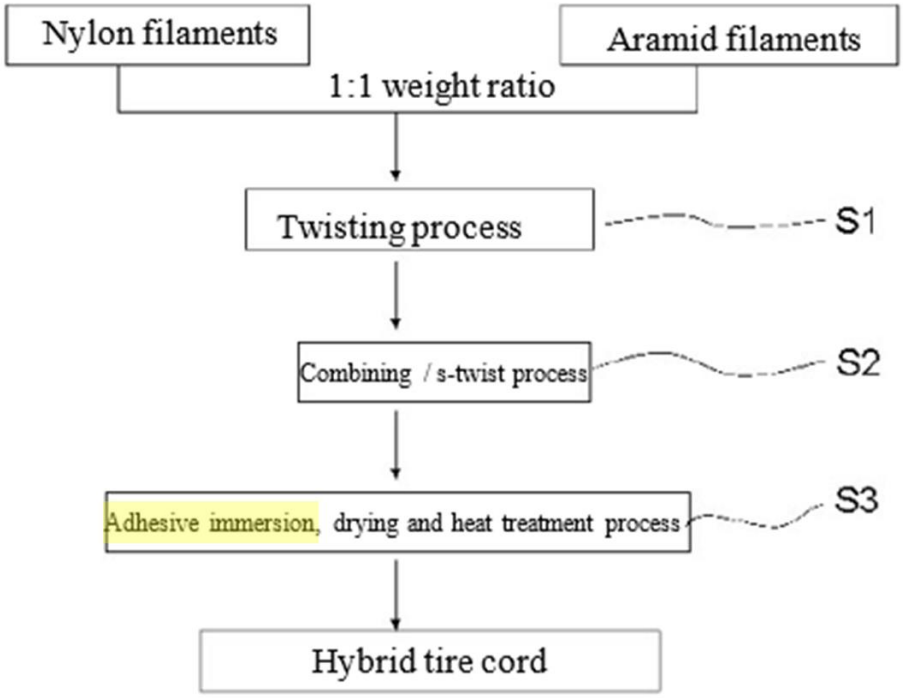


EX1012, Drawing 2 (color annotation added).

**(ix) [1h]: the secondarily-twisted yarn coated with the adhesive has a strength retention rate of 80% or more after a disc fatigue test is performed according to JIS-L 1017 method of Japanese Standard Association, and has a dry heat shrinkage of 1.5-2.5%.**

171. In my opinion, Chung in view of Harikae or in further view of Yokokura renders obvious this limitation.

172. Chung describes a secondarily-twisted (i.e., s-twisted) yarn coated with the adhesive has "a dry heat shrinkage of 2.0 to 5.0%." EX1012, at 4, 6. Thus, Chung demonstrates dry heat shrinkages (2.0-2.5%) that fall within the claimed

range. *In re Wertheim*, 541 F.2d 257, 267 (CCPA 1976) ("Of course, the disclosure in the prior art of any value within a claimed range is an anticipation of the claimed range."); *Ormco Corp. v. Align Tech., Inc.*, 463 F.3d 1299, 1311 (Fed. Cir 2006) ("Where a claimed range overlaps with a range disclosed in the prior art, there is a presumption of obviousness," which only "can be rebutted if it can be shown that the prior art demonstrates away from the claimed range, or the claimed range produces new and unexpected results.").

173. Moreover, embodiment 1 of Chung describes a dry heat shrinkage of 2.6%, which is so close that prima facie one skilled in the art would have expected the cord to have the same properties as cords with dry heat shrinkages falling within the 1.5-2.5% range. *Titanium Metals Corp. v. Banner*, 778 F.2d 775, 783 (Fed. Cir. 1985) (upholding a rejection of a claim directed to an alloy having 0.8% nickel, 0.3% molybdenum as obvious over a reference disclosing alloys of 0.75% nickel, 0.25% molybdenum, 0.94% nickel, and 0.31% molybdenum because "[t]he proportions are so close that prima facie one skilled in the art would have expected them to have the same properties.").

174. To the extent Patent Owner argues that Chung does not teach that the secondarily-twisted (i.e., s-twisted) yarn has a strength retention rate of 80% or more after a disc fatigue test is performed according to JIS-L 1017 method of Japanese Standard Association, Yokokura describes this limitation.

175. Yokokura demonstrates a "tire having a reduced weight and improved durability" and "reinforcement cords being para-aramid cords." EX1014, Abstract. Yokokura states "[a]fter [a] driving test [on a drum], each cord was removed from the corresponding tire and then evaluated for strength in accordance with JIS L 1017," and "[t]he measurement strength was converted into the retention ratio in %." *Id.*, [0082]. Moreover, Table 5 of Yokokura disclosed a cord strength retention ratio of 89%, 85%, 98% and 84% for Examples 3-1, 3-2, 3-3, and 3-4, respectively. These values fall within the claimed "strength retention rate of 80% or more."

TABLE 5-continued

| | Comparative Example 3 | Example 3-1 | Example 3-2 | Example 3-3 | Example 3-4 |
|---|---|---|---|---|---|
| Right side of the formula (I) | 204 | 249 | 323 | 227 | 330 |
| Heat shrinkage ratio (%) after dry-heating at 150° C. for 30 minutes | 0.1 | 0.1 | 0.1 | 0.1 | 0.1 |
| Twist coefficient Nt | 0.64 | 0.64 | 0.60 | 0.75 | 0.54 |
| Belt-reinforcement layer structure | 1 cap 1 layer | 1 cap 1 layer | 1 cap 1 layer | 1 cap 1 layer | 1 cap 1 layer |
| Distance limit for driving on a drum (index) | 100 | 110 | 115 | 105 | 120 |
| Cord strength retention ratio (%) after driving on a drum | 55 | 89 | 85 | 98 | 84 |
| Ground contact area (normal temperature) (index) | 100 | 111 | 106 | 113 | 104 |
| Steering stability at 40 km/h (index) | 100 | 105 | 103 | 106 | 102 |
| Steering stability at 180 km/h (index) | 100 | 101 | 99 | 101 | 102 |

EX1014, Table 5 (color annotation added).

176. In my opinion, a POSITA would have been motivated to combine the teachings of Chung, Harikae, and Yokokura such that the nylon-aramid

reinforcement cord taught by Chung combined with Harikae has a strength retention rate of 80% or more after a disc fatigue test (i.e., driving test on a drum) is performed according to JIS-L 1017 method of Japanese Standard Association. Accordingly, as Yokokura explains, "[t]he higher the retention ratio is[,] the better the test result is." EX1014, [0082]. Moreover, Kwon explains that if the strength retention rate of a tire cord does not exceed 90%, "the ability to support the tire is reduced due to deterioration of physical properties during driving, resulting in deterioration of driving performance and, in severe cases, tire rupture." EX1021, [139].

177. Moreover, "a strength retention rate of 80% or more" could have been obtained through routine optimization of the prior art and is thus not inventive.

**(b) Claim 2: The hybrid fiber of claim 1, wherein weight ratio of the nylon primarily-twisted yarn to the aramid primarily-twisted yarn is 20:80 to 80:20.**

178. In my opinion, Chung in view of Harikae or in further view of Yokokura renders obvious this limitation.

179. Chung describes and claims "[a] hybrid tire cord comprising nylon filaments and aramid filaments, wherein the nylon filaments and the aramid filaments are included at a weight ratio of 10:90 to 90:10." EX1012, claim 1. The majority of ratios within this range fall with the claimed "20:80 to 80:20" weight ratio. For example, Chung describes specific embodiments with weight ratios that satisfy the claimed range, including comparative examples 3 and 4, which have a

30:70 and 70:30 nylon-to-aramid weight ratio, respectively. *See* EX1012 at 7 (TABLE 2). *In re Wertheim*, 541 F.2d at 267 ("Of course, the disclosure in the prior art of any value within a claimed range is an anticipation of the claimed range."); *Ormco*, 463 F.3d at 1311 ("Where a claimed range overlaps with a range disclosed in the prior art, there is a presumption of obviousness," which only "can be rebutted if it can be shown that the prior art demonstrates away from the claimed range, or the claimed range produces new and unexpected results.").

**(c) Claim 3: The hybrid fiber of claim 1, wherein the hybrid fiber cord has breaking tenacity of 8.0 to 15.0 g/d and elongation at break of 7 to 15%, the breaking tenacity and elongation at break being measured according to ASTM D885 (2004).**

180. In my opinion, Chung in view of Harikae or in further view of Yokokura renders obvious this limitation.

181. Chung describes and claims a "hybrid tire cord . . . [with] Tensile strength [(i.e., breaking tenacity)] of 8.0 to 15.0 g/d as measured by ASTM D885; Elongation at break of 10 to 20% measured by ASTM D885." EX1012 at claim 6. Although Chung demonstrates more potential elongation at break percentages than recited in claim 3, Chung describes each and every claimed elongation at break percentage. In addition, Chung describes specific embodiments that have elongation at break percentages that fall within the claimed range (7 to 15%)—such as embodiments 1 and 2. *See* EX1012, at 8 (TABLE 3).

182. Although Chung does not In particular disclose that the 2004 version of the ASTM D885 was used, a POSITA would have recognized Chung's disclosure of the ASTM D885 standard to refer to the then-recent editions of it—for example, the September 2001, April 2002, November 2002, February 2003, ***October 2004***.[4] When Chung was first filed with the Korean Patent Office on June 3, 2005, the 2004 edition of the ASTM D885 was the most recent version. Thus, a POSITA would have recognized Chung to disclose ***the 2004 edition***, as claimed.[5] To the extent Patent Owner disagrees, in my opinion a POSITA would have also found it obvious to use the most recent edition (or any one of a limited set of editions) of a standard test measurement used in the prior art.

**(d) Claim 4**

**(i) [4pre]: A method for manufacturing a hybrid fiber cord, the method comprising:**

183. In my opinion, Chung in view of Harikae or in further view of Yokokura renders obvious this limitation. *See supra* limitation [4pre].

---

[4] In my opinion, a POSITA would have known that the American Society for Testing and Material (ASTM) develops international consensus standards, including model standard test methods for tire cords.

[5] In my opinion, the 2001-2004 editions of the ASTM D 885 standard are substantially the same with respect to the breaking tenacity and elongation at break measurement methods. (*comparing* EX1027 - EX1032 (2001-2004 ASTM D 885 editions).

**(ii) [4a]: a first step for primarily-twisting a nylon filament at a first twist number of 300 to 500 TPM to produce a nylon primarily-twisted yarn;**

184. In my opinion, Chung in view of Harikae or in further view of Yokokura renders obvious this limitation. *See supra* limitation [4a].

**(iii) [4b]: a second step for primarily-twisting an aramid filament at a second twist number 300 to 500 TPM to produce an aramid primarily-twisted yarn;**

185. In my opinion, Chung in view of Harikae or in further view of Yokokura renders obvious this limitation. *See supra* limitation [4b].

**(iv) [4c]: a third step for secondarily-twisting the nylon and aramid primarily-twisted yarns together at a third twist number to produce a ply yarn in such a way that the nylon and aramid primarily-twisted yarns have identical structures with each other; and**

186. In my opinion, Chung in view of Harikae or in further view of Yokokura renders obvious this limitation. *See supra* limitation [4c].

**(v) [4d]: coating the ply yarn with an adhesive, and the ply yarn coated with the adhesive has a signal strength retention rate of 80% or more after a disc fatigue test is performed according to JIS-L 1017 method of Japanese Standard Association, and has a dry heat shrinkage of 1.5 to 2.5%,**

187. In my opinion, Chung in view of Harikae or in further view of Yokokura renders obvious this limitation. *See supra* limitation [4d].

**(vi) [4e]: wherein the first, second, and third twist numbers are identical with each other, and**

188. In my opinion, Chung in view of Harikae or in further view of Yokokura renders obvious this limitation. *See supra* limitation [4e].

**(vii) [4f]: wherein the third step produces a 2-ply secondarily-twisted yarn consisting of 1-ply of nylon primarily-twisted yarn and 1-ply of aramid primarily-twisted yarn.**

189. In my opinion, Chung in view of Harikae or in further view of Yokokura renders obvious this limitation. *See* limitation [4f].

**(e) Claim 6: The method of claim 4, wherein the step of coating the ply yarn with an adhesive comprises: submerging the yarn having the adhesive solution; drying the ply yarn having the adhesive solution impregnated therein; and heat-treating the dried ply yarn.**

190. In my opinion, Chung in view of Harikae or in further view of Yokokura renders obvious this limitation.

191. Chung describes and claims "[a] method for manufacturing a hybrid tire cord, comprising the steps of a) twisting nylon filaments and aramid filaments to produce a z-twisted yarn; b) combining 2 to 3 strands of the z-twisted yarn to produce an s-twisted yarn; c) ***immersing the s-twisted yarn in an adhesive solution and then drying and heat-treating it***." EX1012 at claim 9 (emphasis added). This method is also illustrated in Drawing 2 of Chung.

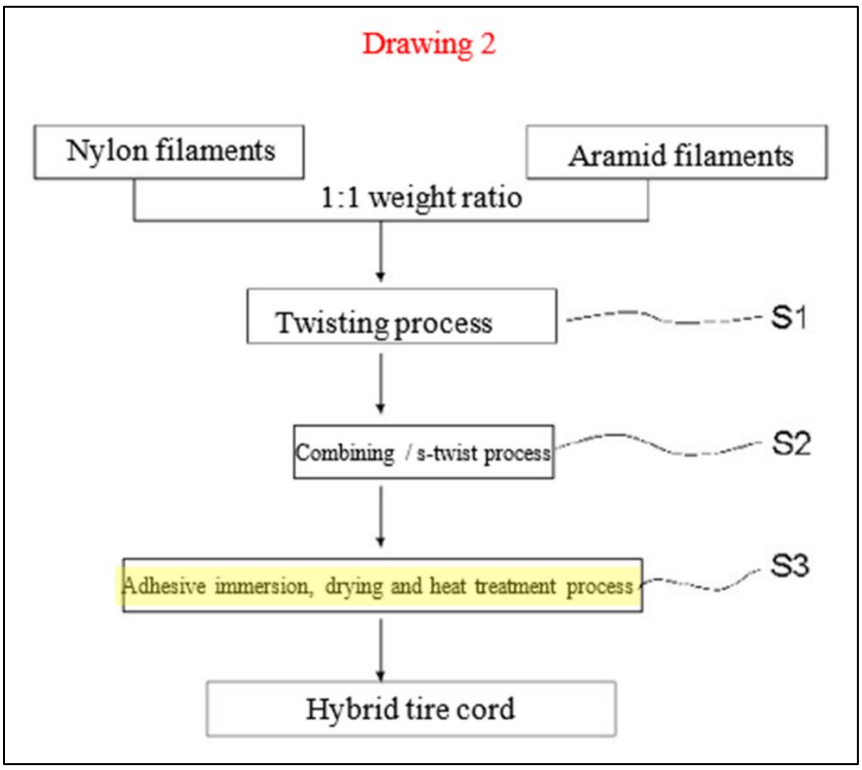


EX1012, Drawing 2 (color annotation added).

**(f) Claim 7: The method of claim 6, wherein the adhesive solution comprises Resorcinol – Formaldehyde - Latex adhesive.**

192. In my opinion, Chung in view of Harikae or in further view of Yokokura renders obvious this limitation.

193. Chung describes "immersing the s-twisted yarn in an adhesive solution." EX1012 at 4. According to Chung, "[t]he adhesive solution used as the above adhesive is not particularly limited in the present invention, and an RFL solution (Resorcinol Formaldehyde Latex), which is an impregnation solution for

tire cords commonly used in this field, or an epoxy-based adhesive composition solution, etc. can be used." EX1012 at 6.

### E. Ground 5: Chung in view of Harikae and Yokokura, and Moreover in view of Rowan and/or Buchanan Renders Obvious Claim 5

#### 1. Claim Analysis

##### (a) Claim 5: The method of claim 4, wherein the first, second and third steps are performed simultaneously and continuously.

194. In my opinion, Chung in view of Harikae and Yokokura or in further view of Rowan renders obvious this limitation.

195. The combination of Chung, Harikae, and Yokokura describes performing the first, second, and third steps, but does not explicitly provide that the three steps are performed simultaneously and continuously. I understand that during prosecution, Applicant contended the disclosure taught "a continuous-type process, where the aramid and nylon yarns are continuously supplied and are primarily twisted (i.e., twisting the individual yarns) ***and then*** secondarily twisting (i.e., twisting the twisted aramid and nylon yarns together), such that in a given instant, primary and secondary twisting is occurring simultaneously." EX1002 (Reply to Office Action of September 29, 2016), at 7 (emphasis added).

196. Rowan demonstrates this limitation. In particular, Rowan teaches that "[w]ith some conventional methods of tire cord manufacturing, . . . a ring twist

machine [ ] produce[s] a cable in two steps, commonly known as the 'ring twist process.'" EX1015, [0028]. "The yarn is twisted into a ply" and "thereafter, the ply is . . . twisted into a cable of two or more plies with twisting equipment." *Id.* Because "this two-step ring twist process is laborious and expensive," *Id.*, [0029], Rowan demonstrates "machines [that] combine the ply and twisting step into one operation, thus rendering the tire cord production process more efficient and cost effective." EX1015, [0007], [0039].[6]

197. With reference to FIG. 4, Rowan describes a "one-machine cabled and treated cord unit ('OCT') 310," EX1015, [0045], which comprises a "direct cable subunit ('DCU') 312," *Id.*, [0046]. "Yarns for producing a cable first may be processed through the DCU 312." *Id.*, [0047]. "Individual feed yarns 314 and 322 are cabled in the DCU 312." *Id.*, [0050]. The machine can "combine the ply and twisting step into one operation." *Id.*, [0007]. The raw cabled cord 334 is forwarded to the treating subunit 328 where it is coated with an adhesion agent, such as a Resorcinal-Formaldehyde-Latex (RFL), and heated in heating unit 342. *See Id.*, [0057]. "The OCT 310 cables and treats the cord in a continuous process." *Id.*,

[6] As used in Rowan, the term "'ply' means a twisted single yarn," and "'twisting' means the number of turn about its axis per unit of length of yarn or other textile strand." EX1015, [0028]. Further, in Rowan, "a 'cable' or a 'cord' means a product formed by twisting together two or more plied yarns." EX1015, [0029].

[0045]. And "[t]he treating subunit 328 may be constructed as part of the 312." *Id.* [0064].

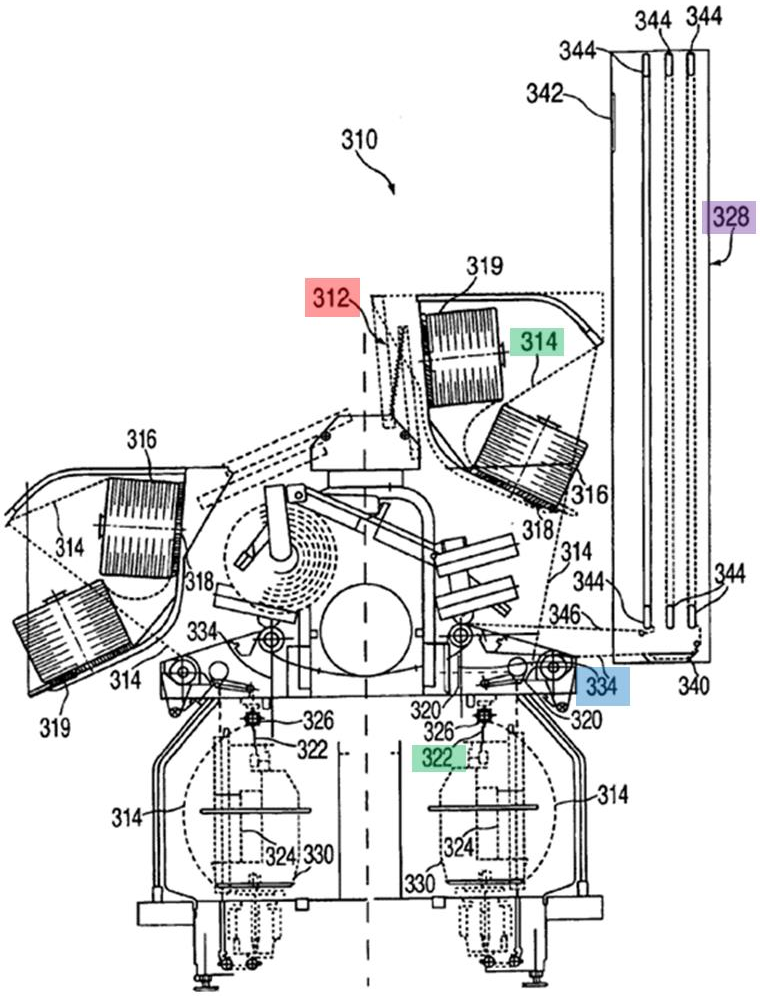


FIG. 4

EX1015, FIG. 4 (color annotations added).

198. Moreover, to the extent Patent Owner asserts that Rowan's Figures 4 and 5 do not depict the primary twisting (even though such primary twisting is described in Rowan's specification), a POSITA would have considered it obvious for a single apparatus to continuously and simultaneously perform such primary

twisting in view of Buchanan's teachings discussed below. A POSITA would understand that simultaneity in the primary twisting of the yarns is needed in order that they are ready to be secondarily twisted to form a cord in Rowan's continuous process that lacks "intermediate take-up." *Id.*; EX1007, Abstract. If the yarns are not twisted at the same time, then the apparatus could not "treat[] the cord in a continuous process without intermediate take-up" as required by Rowan. Ex. 1007, [0011].

199. Buchanan describes "a method of plying yarns to obtain a composite yarn." EX1010, 1:28-30. Per Buchannan, twists are "simultaneously applied to twist the [yarn] strands [10] and ply the strands of each multi-stranded bundle [40] together." *Id.*, 1:36-39. "By the time the converged strands pass the twisting apparatus 32, a pair of twisted bundles 40 of strands is created." *Id.*, 3:45-47. The bundles 40 converge in the compression tube 38 and "ply together in a direction of twist . . . which is opposite to the bundle direction of twist," forming the composite yarn 42. *Id.*, 3:50-4:5.

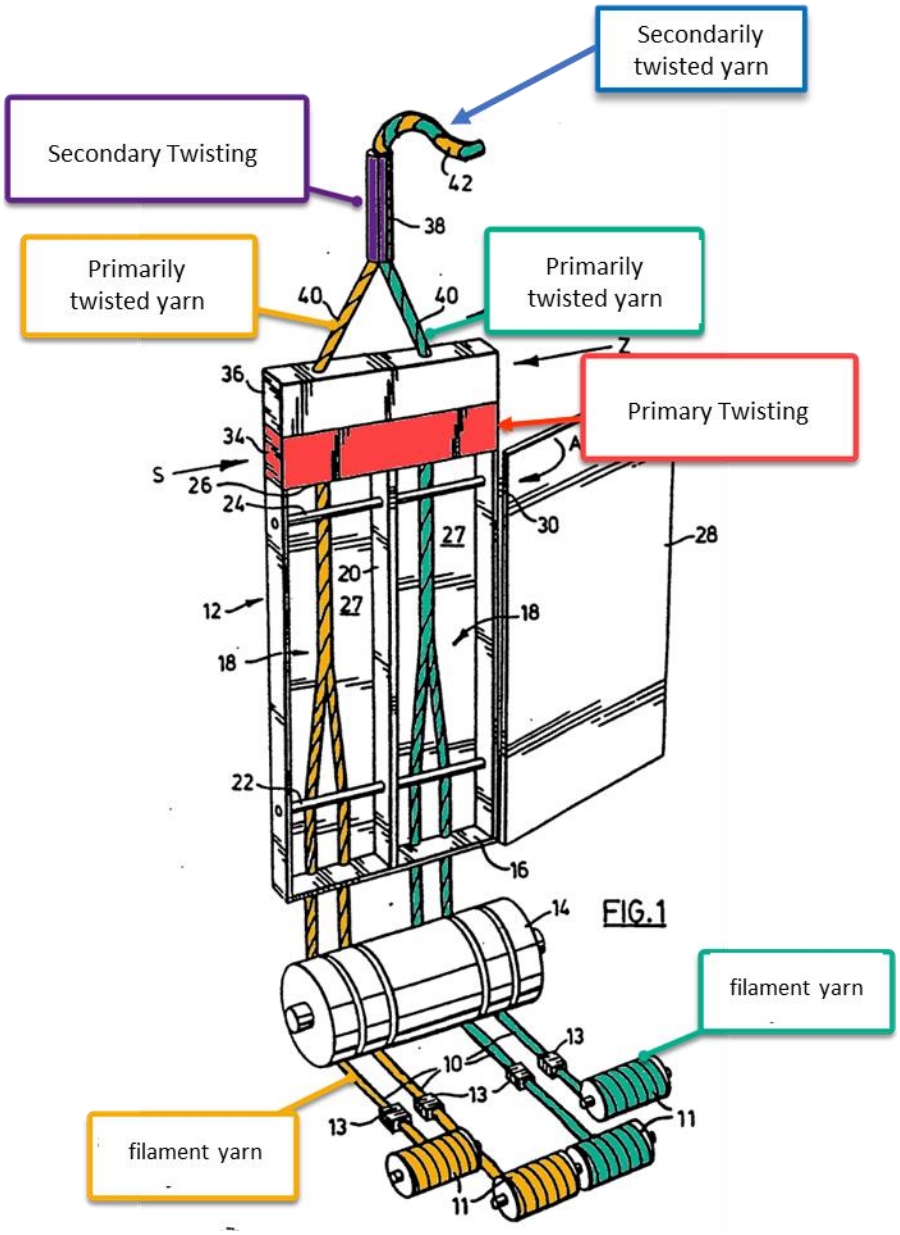


EX1010 (Buchanan), FIG. 1 (color annotations added).

### 2. Motivation to Combine

200. In my opinion, a POSITA would have been motivated to combine the teachings of Rowan with the combined teachings of Chung, Harikae, and Yokokura, such that the first step (i.e., plying nylon yarn), second step (i.e., plying aramid yarn),

and third step (i.e., twisting plied nylon and aramid yarns together into a cord) are performed simultaneously and continuously, as Rowan describes. Rowan's method comprises "twisting two or more yarns together to form a cable, and directly after twisting, applying and curing an adhering agent to the cable to form a treated cord." *Id.* In Rowan, "machines combine the ply and twisting step into one operation, thus rendering the tire cord production process more efficient and cost effective." EX1015, [0007], [0039]. According to Rowan, conventional methods of plying and twisting in two separate steps is "laborious and expensive." *Id.*, [0029]. Doing such steps separately "involve[s] a number of individual steps and multiple transfers of product," which are "labor and cost intensive." *Id.*, [0006]. Another benefit is that a continuous process "produce[s] larger package sizes and improve quality by requiring fewer knows or splices in the final cord product." *Id.*

201. Other references also teach the benefits of using a continuous and simultaneous process. For example, Fritsch describes "a direct cabling machine" that can "operate at considerably higher speeds (30-50% greater) than conventional ring twisters," because they "complete the production of cabled cord in one step whereas ring twisters require two steps." *Id.*, ¶23. Similarly, Osbourne discloses creating an aramid-nylon cord "made from two identical aramid yarns ... individually twisted ... in a first direction and from one yarn ... twisted ... in the same direction,

these three yarns being further ***simultaneously*** twisted ... in the opposite direction." EX1011, [0075] (emphasis added).

### 3. Reasonable Expectation of Success

202. In my opinion, a POSITA would have reasonably expected to be able to successfully combine Chung, Harikae, Yokokura, and Rowan or Buchanan in the manner described above, because each reference demonstrates a reinforcement cord, and a POSITA would have recognized the modifications required by the combination to be mechanical and well within his knowledge and skill set. For example, combining the plying and cord twisting steps into one process such that "the aramid and nylon yarns are continuously supplied and are primarily twisted (i.e., twisting the individual yarns) and then secondarily twisting (i.e., twisting the twisted aramid and nylon yarns together), such that in a given instant, primary and secondary twisting is occurring simultaneously," EX1002 (Reply to Office Action of September 29, 2016), at 7, would require mere mechanical modifications to the equipment used to manufacture the reinforcement cords.

## IX. CONCLUSION

203. For the reasons set forth above, I believe claims 1-7 of the '731 patent are unpatentable in view of the prior art. In signing this declaration, I understand that the declaration will be filed as evidence in a contested case before the Patent Trial and Appeal Board of the United States Patent and Trademark Office. I acknowledge

that I may be subject to cross-examination in this case and that cross-examination will take place within the United States. If cross-examination is required of me, I will appear for cross-examination within the United States during the time allotted for cross-examination.

204. I declare that all statements made herein of my knowledge are true, that all statements made on information and belief are believed to be true, and that these statements were made with the knowledge that willful false statements and the like so made are punishable by fine or imprisonment, or both, under Section 1001 of Title 18 of the United States Code.

Dated: February 28, 2025

By: _____
Jon Rust, Ph.D.