IN THE UNITED STATES PATENT AND TRADEMARK OFFICE

BEFORE THE PATENT TRIAL AND APPEAL BOARD

HS HYOSUNG ADVANCED MATERIALS CORP.,

Petitioner,

v.

KOLON INDUSTRIES INC.,

Patent Owner.

Case No. IPR2025-00664

U.S. Patent No. 9,617,663

**PETITION FOR *INTER PARTES* REVIEW
OF U.S. PATENT NO. 9,617,663**

TABLE OF CONTENTS

I. Introduction 1

II. Standing 2

III. Grounds 2

IV. '663 Patent Overview 3

A. Background of Technology (Ex. 1003, ¶¶36-42) 3

B. Specification (Ex. 1003, ¶¶43-46) 6

C. Prosecution History of the '663 Patent (Ex. 1003, ¶¶47-51) 7

V. Level of Ordinary Skill in the Art 8

VI. Claim Construction 8

A. "primarily twisted yarn" 9

B. "plied yarn" 9

C. "tire cord" 9

VII. Prior Art Summary 10

A. Tamura (Ex. 1006) 10

B. Rowan (Ex. 1007) 11

C. Buchanan (Ex. 1010) 13

D. Fritsch (Ex. 1011) 15

VIII. Ground 1: Tamura in View of Fritsch, Rowan, and Optionally Buchanan Renders Obvious Claims 1-3 17

A. Motivation to Combine 18

1. Motivation to Combine Tamura with Rowan 18

2. Motivation to Optionally Combine Tamura and Rowan with Buchanan 22

3. Motivation to Combine Tamura with Fritsch 25

B. Claim 1 29

1. 1[pre]: A method of manufacturing a hybrid tire cord comprising: 29

2. 1[a]: a first step of primarily twisting an aramid filament yarn in a first direction to form an aramid primarily twisted yarn; 30

3. 1[b]: a second step of primarily twisting a nylon filament yarn in a second direction to form a nylon primarily twisted yarn, the second step and the first step being conducted simultaneously; and 31

4. 1[c]: a third step of secondarily twisting the aramid primarily twisted yarn and the nylon primarily twisted yarn in a third direction to form a plied yarn, the third step being conducted continuously with the first and second steps, ...38

5. 1[d]: wherein the first, second and third steps are conducted by one twister, ...41

6. 1[e]: the second direction is the same as the first direction, ...41

7. 1[f]: tension applied to the nylon filament yarn in the second step is higher than tension applied to the aramid filament yarn in the first step in such an amount that, if the secondary twist of the hybrid tire cord with a predetermined length were untwisted, the aramid primarily twisted yarn would be 1.005 to 1.025 times longer than the nylon primarily twisted yarn. 42

C. Claim 2 46

1. 2[pre]/2[a]: The method according to claim 1, further comprising: dipping the plied yarn in an adhesive agent solution;.....46

2. 2[b]: drying the adhesive agent solution-impregnated plied yarn; and.....47

3. 2[c]: thermally treating the dried plied yarn. 48

D. Claim 3 48

1. 3[pre]: The method according to claim 2, wherein the dipping, drying and thermal treatment steps are continuously conducted, and.....48

2. 3[a]: tension applied to the plied yarn in the dipping, drying and thermal treatment steps is 0.4 g/d or less per cord.....49

IX. Ground 2: Fritsch Alone Renders Obvious Claims 1-2 51

A. Claim 1 51

1. 1[pre]: A method of manufacturing a hybrid tire cord comprising:.....51

2. 1[a]: a first step of primarily twisting an aramid filament yarn in a first direction to form an aramid primarily twisted yarn; 52

3. 1[b]: a second step of primarily twisting a nylon filament yarn in a second direction to form a nylon primarily twisted yarn, the second step and the first step being conducted simultaneously; and.....52

4. 1[c]: a third step of secondarily twisting the aramid primarily twisted yarn and the nylon primarily twisted yarn in a third direction to form a plied yarn, the third step being conducted continuously with the first and second steps, ...54

5. 1[d]: wherein the first, second and third steps are conducted by one twister,.....55

6. 1[e]: the second direction is the same as the first direction,.....56

7. 1[f]: tension applied to the nylon filament yarn in the second step is higher than tension applied to the aramid filament yarn in the first step in such an amount that, if the secondary twist of the hybrid tire cord with a predetermined length were untwisted, the aramid primarily twisted yarn would be 1.005 to 1.025 times longer than the nylon primarily twisted yarn.....56

B. Claim 2 60

1. 2[pre]/2[a]: The method according to claim 1, further comprising: dipping the plied yarn in an adhesive agent solution;.....60

2. 2[b]: drying the adhesive agent solution-impregnated plied yarn; and.....62

3. 2[c]: thermally treating the dried plied yarn. 62

X. 35 U.S.C. § 325(d) Supports Institution 63

XI. *Fintiv* Supports Institution 63

XII. Mandatory Notices.....66

A. Real Party-in-Interest 66

B. Related Matters.....66

C. Counsel and Service Information.....66

D. Payment of Fees 67

XIII. Conclusion 67

LIST OF EXHIBITS

Exhibit	Description
Ex. 1001	U.S. Patent No. 9,617,663 ("the '663 patent")
Ex. 1002	File History of the '663 patent
Ex. 1003	Declaration of Jon Rust, Ph.D.
Ex. 1004	*Curriculum Vitae* of Jon Rust, Ph.D.
Ex. 1005	Japanese Patent No. 2009-68549
Ex. 1006	Certified Translation of Japanese Patent No. 2009-68549 ("Tamura"), prior art under at least 35 U.S.C. §102(a)(1)
Ex. 1007	U.S. Pat. No. 6,886,320 ("Rowan")
Ex. 1008	PCT Publication No. WO 2009/134063
Ex. 1009	Certified Translation of PCT Publication No. WO 2009/134063 ("Kwon"), prior art under at least 35 U.S.C. §102(a)(1)
Ex. 1010	European Patent App. No. 0405887A1 ("Buchanan"), prior art under at least 35 U.S.C. §102(a)(1)
Ex. 1011	U.S. Pat. App. Pub. No. 2003/0159768 ("Fritsch"), prior art under at least 35 U.S.C. §102(a)(1)

LIST OF CHALLENGED CLAIMS

Claim No.	Claim Language
1[pre]	A method of manufacturing a hybrid tire cord comprising:
1[a]	a first step of primarily twisting an aramid filament yarn in a first direction to form an aramid primarily twisted yarn;
1[b]	a second step of primarily twisting a nylon filament yarn in a second direction to form a nylon primarily twisted yarn, the second step and the first step being conducted simultaneously; and
1[c]	a third step of secondarily twisting the aramid primarily twisted yarn and the nylon primarily twisted yarn in a third direction to form a plied yarn, the third step being conducted continuously with the first and second steps,
1[d]	wherein the first, second and third steps are conducted by one twister,
1[e]	the second direction is the same as the first direction,
1[f]	the third direction is opposite to the first direction, and
1[g]	tension applied to the nylon filament yarn in the second step is higher than tension applied to the aramid filament yarn in the first step in such an amount that, if the secondary twist of the hybrid tire cord with a predetermined length were untwisted, the aramid primarily twisted yarn would be 1.005 to 1.025 times longer than the nylon primarily twisted yarn.
2[pre]	The method according to claim 1, further comprising:
2[a]	dipping the plied yarn in an adhesive agent solution;
2[b]	drying the adhesive agent solution-impregnated plied yarn; and
2[c]	thermally treating the dried plied yarn.

Claim No.	Claim Language
3[pre]	The method according to claim 2, wherein the dipping, drying and thermal treatment steps are continuously conducted, and
3[a]	tension applied to the plied yarn in the dipping, drying and thermal treatment steps is 0.4 g/d or less per cord.

I. INTRODUCTION

HS Hyosung Advanced Materials Corp. ("Petitioner") respectfully request *inter partes* review of claims 1-3 of U.S. Patent No. 9,617,663 (the "'663 patent"). A reasonable likelihood exists that Petitioners will prevail on at least one challenged claim.

The '663 patent relates to a hybrid tire cord formed by twisting a nylon thread and an aramid thread in one direction to form, respectively, a nylon yarn and an aramid yarn, then twisting the two yarns in the opposite direction to form a raw tire cord. While the '663 patent concedes that nylon-aramid hybrid tire cords were well-known, the '663 patent purports to invent a new method where the nylon and aramid yarns are twisted in the same direction by a single twister, and that the aramid yarn is 0.5% to 2.5% longer than the nylon yarn when untwisted. Notably, during prosecution of the '663 patent, the examiner found all of these limitations present in the prior art—but allowed the claims because they recited applying different tension to the yarns to achieve the difference in lengths.

However, such techniques were known in the art years before the earliest filing date of the '663 patent, June 29, 2015. This petition relies on Tamura, Rowan, and Fritsch, all of which were published years earlier.

Indeed, the notion that yarns will achieve different untwisted lengths based on the amount of tension applied to them during twist was a well-known property of

such materials. This itself is taught in the Fritsch reference published in 2003, which is directed to forming a hybrid tire cord and explains that altering the tension of the yarns can create an "unbalanced" tire cord, resulting in improved physical properties.

Tamura, which was filed by Bridgestone Corporation and published in 2009, describes the benefits of a nylon-aramid hybrid tire cord. Tamura explains that given the different physical properties of the two materials, it is beneficial to create a tire cord where the nylon and aramid threads are twisted in one direction to form nylon and aramid yarns, and then the yarns are twisted in the opposite direction to form the tire cord. This results in a tire cord with low stress.

Similarly, Rowan also teaches a hybrid aramid-nylon tire cord, but further explains that such a cord can be formed using a "one-machine process" that twists the cord in a single step and then sends it for treatment by an adhesive agent. Rowan explains that by using a single machine that performs twisting simultaneously and continuously, this greatly reduces the cost of manufacturing.

II. STANDING

Petitioner certifies that the '663 patent is available for *inter partes* review and they are not estopped from requesting IPR under 35 U.S.C. §315(e)(1).

III. GROUNDS

Petitioner presents the following grounds of challenge.

Ground	Basis	Prior Art	Claims
1	§103	Tamura, Fritsch, Rowan (and optionally Buchanan)	1-3
2	§103	Fritsch	1-2

IV. '663 PATENT OVERVIEW

A. Background of Technology (Ex. 1003, ¶¶36-42)

One of the most important parts of a tire is its reinforcement. It provides strength and stability to the tire, like bones in a human body. Tire reinforcements can be made of various materials, including textiles. Originally, textile reinforcements were made of cotton, which was slowly replaced by rayon. And at the time of the '663 patent, nylon and aramid tire reinforcement materials were prevalent—particularly for use in the tire's cap ply. The "use of tire cords made from high tenacity organic fibers such as rayon, nylon, aramid, and polyester in a construction of moderate twist has remained the principal reinforcing method." Ex. 1007, ¶5.

One important way to enhance tire performance is to improve the physical properties of the tire cord used as a reinforcing material. Ex. 1009 (Kwon), ¶2. Previously, reinforcement cords were entirely nylon or entirely aramid. Aramid is a high-tenacity, high-modulus, low-elongation, and thermally-stable material. And nylon 6.6 is a high elongation, low-modulus, high-fatigue-resistant material. In the early 2000's, Michelin developed a new textile reinforcement which combined the

beneficial aspects of nylon and aramid and significantly improved high-performance tires—i.e., the nylon-aramid hybrid reinforcement cord. Hybrid cords are a combination of two or more types of yarns plies twisted together (e.g., a nylon yarn and an aramid yarn).

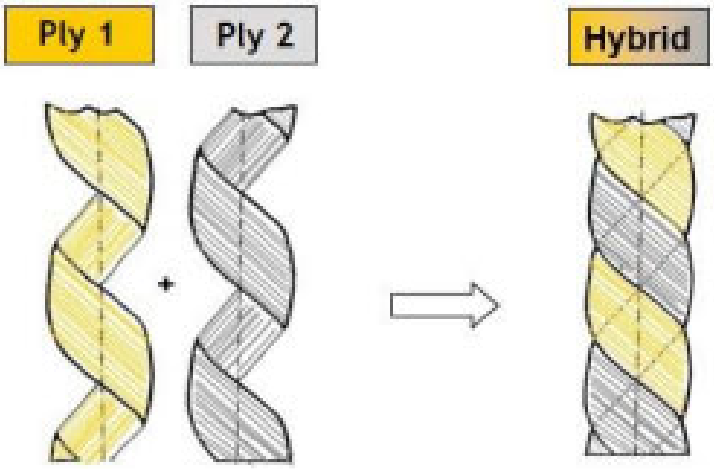

Wahl, G., Basics of Textile Reinforcement Materials for Tires (2006).

Each ply is twisted on its own axis and then with another ply before it is formed into a cord. The ply twisting directions are denoted by "z" and "s". If the direction of twist is from right to left, it is called "z" twist, and if the direction of twist is from left to right, it is called "s" twist. In some instances, each individual ply is twisted in the "z" direction and then the two individually-twisted plies are twisted together in "s" direction to form a cord. Twisting causes the cord to lose tensile strength, but it simultaneously gains flex fatigue resistance. Hence the number of times a ply is twisted must strike a balance between tensile strength and

flex fatigue resistance.

Further, because textile fabric adheres poorly to rubber, the textile reinforcements have long been treated with adhesive solutions, commonly Resourcinol-Formaldehyde-Latex or other epoxies, which acts as a bonding agent between the textile reinforcement cord and the rubber tire. The illustration below shows how reinforcement cords adhere to a rubber cap ply.

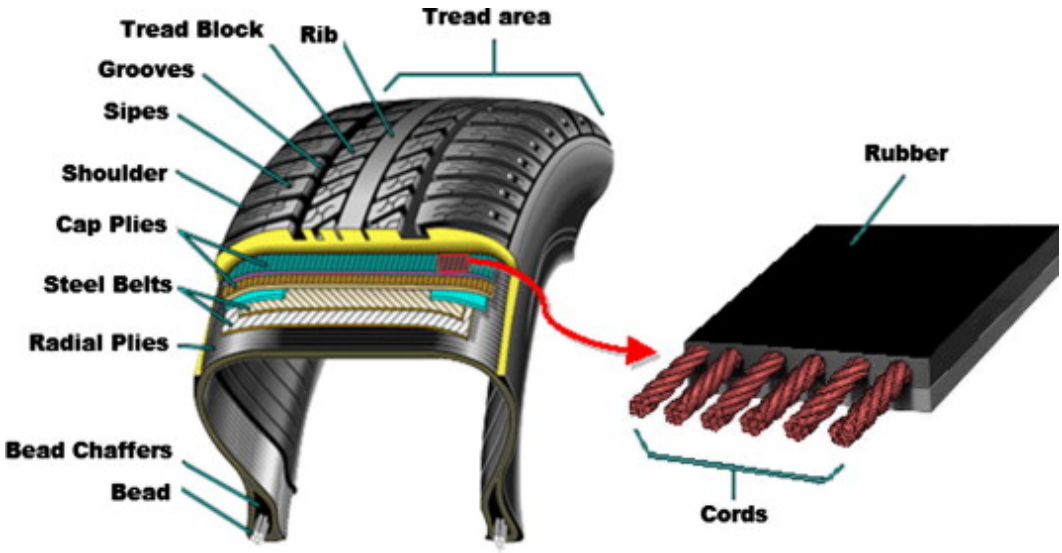

Drying and heat treating—i.e., stretching the textile cords at high temperatures—typically follows. This process reduces undesired thermal shrinkage.

On balance, aramid-nylon hybrid reinforcement cords were known to have better properties than the prior aramid-aramid and nylon-nylon cord constructions. For instance, when compared with aramid-aramid cords, the hybrid cords have improved fatigue resistance, higher elongation, lower raw material cost, and controlled shrinkage. And when compared with nylon-nylon cords, the hybrid cord

will have a lower shrinkage, improved handling and cornering stability, speed performance, and rolling resistance.

B. Specification (Ex. 1003, ¶¶43-46)

The ’663 patent relates to “a hybrid tire cord including heterogeneous yarns having different physical properties,” and specifically that an aramid yarn is 1.005 to 1.025 times longer than the nylon yarn it is twisted with. Ex. 1001, 1:6-7; cl. 1.

The specification acknowledges that the typical materials for tire cords are nylon and aramid. *Id.*, 1:38-39. Nylon has “low cost, superior adhesivity and superior fatigue resistance,” but “has a problem of causing flat spots due to low modulus and great deformation with variation in temperature.” *Id.*, 1:39-46. Aramid, on the other hand, has “almost no flat spot phenomenon” due to “very high modulus,” but is “very expensive.” *Id.*, 1:47-54. Tire molding is also relatively more difficult due to the high modulus. *Id.*, 1:54-57.

The specification explains that it was known that such disadvantages with each material could be solved by a “hybrid cord to which both nylon and aramid are applied.” *Id.*, 1:58-60. The specification acknowledges that “[t]ypically,” the aramid yarn has a “greater twist number” compared to the nylon yarn, and the yarns are twisted in opposite directions. *Id.*, 1:64-2:5. However, the specification alleges this method has “low production efficiency” because it requires a three-step process due to the yarns being twisted in opposite directions: (1) twisting the nylon yarn in

one direction, (2) twisting the aramid yarn separately and in the opposite direction, and (3) twisting the two yarns together. *Id.*, 2:14-22. Moreover, because the aramid yarn has a higher twist number, the strength of the aramid is "greatly deteriorated." *Id.*, 2:32-37.

Thus, the specification claims to invent a new method where the nylon and aramid yarn are twisted in the same direction, and thus "are conducted in one twister, thereby improving production efficiency." *Id.*, 3:29-36, 4:34-37. The alleged new method also uses less twists for the aramid yarn, although this feature is not recited in the claims of the '663 patent. Finally, the aramid yarn is "1.005 to 1.025 times" the length of the nylon yard when the cord is untwisted. *Id.,* 4:12-17.

C. Prosecution History of the '663 Patent (Ex. 1003, ¶¶47-51)

The application to the '663 patent was filed June 28, 2016 and claims priority to a June 29, 2015 Korean patent application.

The original application's claims were broader than what was eventually allowed. The original independent claim 1 merely required that the nylon and aramid yarns were individually "primarily twisted" and that they be "secondarily twisted together" and that the aramid yarn was "1.005 to 1.025 times" the length of the nylon yarn. Ex. 1002, 144.

The examiner found that claims 1-8 were unpatentable over Love in view of Shepherd. Ex. 1002, 97-98. The examiner, however, indicated that claim 9 would

be allowed if amended to resolve a Section 112 issue, specifically that it was not clear if the language of claim 9 required the method to "untwist" the cord, or if it was merely saying "if the product were untwisted, it would have certain characteristics." *Id.*, 96.

In response, the applicant canceled the first eight of the eleven claims. Original claim 9 was amended to clarify the Section 112 issue, resulting in the current claim set. *Id.*, 66. Following this amendment, the examiner allowed the claims.

V. LEVEL OF ORDINARY SKILL IN THE ART

A person of ordinary skill in the art ("POSITA") at the time of the '663 patent would have had at least a Bachelor of Science degree in materials science and engineering, textile engineering, chemistry, or an equivalent field, and at least two years of experience with tire reinforcement cord design and manufacture, and/or fiber or polymer science and processing. Ex. 1003, ¶35. More education can supplement practical experience and vice versa. *Id.* Petitioners' expert, Dr. Jon Rust, exceeded this skill level by the priority date and therefore has the qualifications and experience necessary to the '663 patent based on the perspective of a POSITA. *Id.*

VI. CLAIM CONSTRUCTION

The claim terms should be given their plain and ordinary meaning under

Phillips, and "construed only to the extent necessary to resolve the controversy." *Wellman, Inc. v. Eastman Chem. Co.*, 642 F.3d 1355, 1361 (Fed. Cir. 2011). Here, Petitioner submits that no express constructions are required to find the '663 patent claims unpatentable. Ex. 1003, ¶¶52-53. While the specification of the '663 patent does provide descriptions of certain terms found in the limitations, as discussed below, these definitions are consistent with their plain meaning. Ex. 1003, ¶54. Thus, without conceding that such descriptions are lexicographical, Petitioner adopts these descriptions as definitions for their respective term.

A. "primarily twisted yarn"

The specification of the '663 patent states that the term "primarily twisted yarn" "refers to a single yarn made by twisting one filament yarn in one direction." Ex. 1001, 5:14-16; Ex. 1003, ¶55.

B. "plied yarn"

The specification states that this term "refers to a yarn made by twisting two or more primarily twisted yarns together in one direction." *Id.*, 5:17-19. The specification notes that this term is "also called a 'raw cord.'" *Id.*; Ex. 1003, ¶56.

C. "tire cord"

The specification states that the term "tire cord" "includes the 'raw cord' as well as 'dip cord' which means a plied yarn containing an adhesive agent so that it can be directly applied to rubber products." *Id.*, 5:20-23. In other words, a tire cord

can mean either an untreated raw cord, or a dip cord that is the result of dipping a tire cord into an adhesive agent solution to apply it to a rubber product. Ex. 1003, ¶57.

VII. PRIOR ART SUMMARY

A. Tamura (Ex. 1006)

Japanese Patent No. 2009-68549 ("Tamura") (Ex. 1005) was published on April 2, 2009 and is therefore prior art under at least 35 U.S.C. §102(a)(1). Exhibit 1006 is the certified translation of Tamura.

Tamura discloses and claims a large diameter rubber hose reinforced by compounding fiber fabric and/or fiber cord composed of a composite fiber of aramid fiber and nylon fiber. Ex. 1006, cl. 1; Ex. 1003, ¶¶58-59. Tamura discloses that, like tires, large diameter hoses used for transporting large amounts of liquid (e.g., crude oil) are generally subjected to high pressures and thus require a reinforcing layer. *Id.*, ¶2. Tamura "aims to provide a large-diameter rubber hose that maintains the adhesive strength between the rubber layer and the reinforcing material layer . . . [that] exhibits little change in hose diameter due to fluid pressure when transporting fluid, and has excellent durability and dimensional stability." *Id.*, ¶9.

According to Tamura, the "above-mentioned composite fiber cord is obtained by lower twisting a predetermined number of aramid fibers and nylon fibers, each of which is individually twisted, and then upper twisting the resulting fibers

together." *Id.*, ¶18. "The number of lower twists is usually set to be the same as the number of upper twists." *Id.*, ¶23; Ex. 1003, ¶60.

B. Rowan (Ex. 1007)

U.S. Pat. No. 6,886,320 ("Rowan") was published March 27, 2003 and is prior art under at least 35 U.S.C. §102(a)(1).

Rowan discloses a single apparatus that simultaneously twists two types of single threads into twisted filament yarns and then continuously twists the two filament yarns into a cord. Ex. 1003, ¶¶61-62.

Specifically, Rowan teaches that, in the prior art, a "ring twist process" was used to "produce a cable in two steps" where "[t]he yarn is twisted in a ply," which "means a twisted single yarn," and then the "ply is … twisted into a cable of two or more plies." Ex. 1007, 4:5-14. Rowan notes that in the prior art, these two steps "consist[] of separate and independently operated machines dedicated respectively to twisting the yarn into a ply'" and "twisting the ply into a cable on a separate machine." *Id.*, 4:15-24. Such a process "is laborious and expensive." *Id.*

Thus, Rowan notes that the "industry in many instances now has replaced the ring twist operations with equipment that ***combines both steps into a single machine***, commonly referred to as a direct [c]able unit ('DCU')." Ex. 1007, 5:50-53. Rowan's DCU is depicted below in Figure 4 and clearly depicts a single apparatus. Ex. 1003, ¶¶63-64.

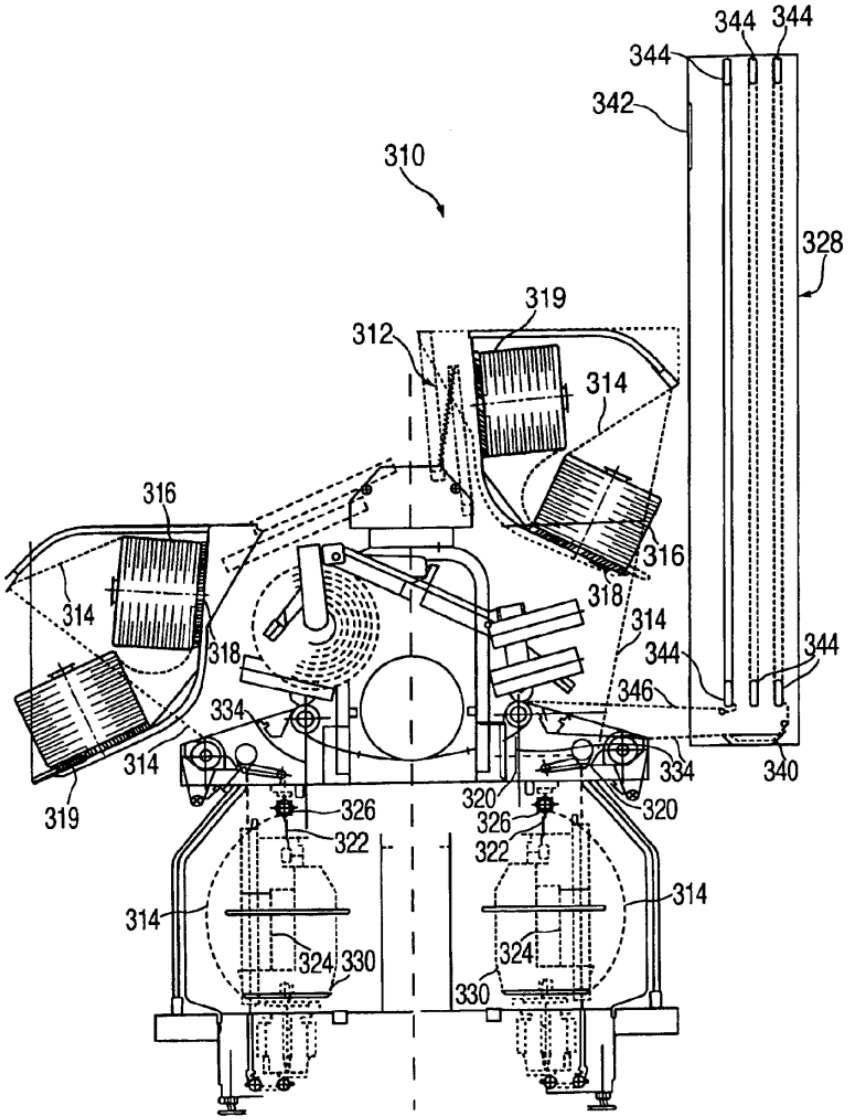

FIG. 4

Rowan explains that "outer yarn 314" (orange) is pulled from a "supply package 316" and is pretensed by "brake 320." Ex. 1007, 7:36-39. The brake "pretense[s] the yarn[] for twisting." *Id.*, 7:43-45. Similarly, "inner yarn 322" (green) is drawn from "inner supply package 324" and is tensioned by "brake 326." *Id.*, 7:47-53. The tension of the two brakes may be "maintained via tension

measuring devices." *Id.*, 7:53-55. The two yarns are then "twisted into a cord 334" (orange-green). *Id.*, 7:61-64; Ex. 1003, ¶65.

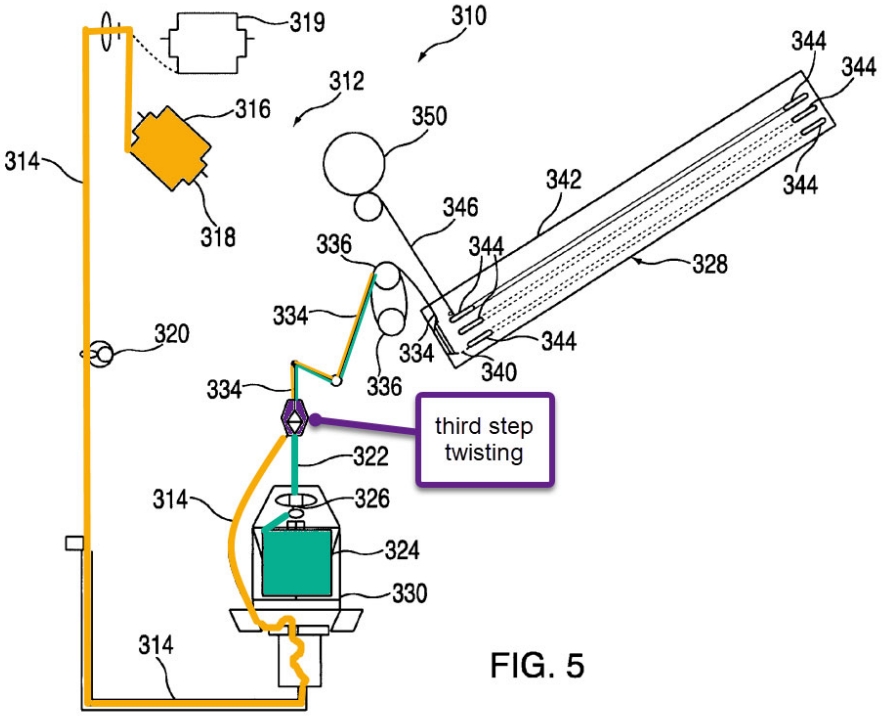

FIG. 5

C. Buchanan (Ex. 1010)

European Patent Application 0405887A1 ("Buchanan") was published October 13, 1993 and is prior art under at least 35 U.S.C. §102(a)(1).

Buchanan discloses a single apparatus that simultaneously twists two types of threads into yarns and then continuously twists the yarns into a cord. Figure 1, as annotated below, depicts Buchanan's apparatus "for making a composite yarn." Ex. 1010, ¶9. In Figure 1, each strand of yarn is "unwound from packages" and is applied tension by "tensioning devices 13." *Id.*, ¶10. Buchanan teaches that a

"twisting apparatus 32" (red) comprises a "lower air jet 34 for applying ***twist*** to the yarn in the S direction." Ex. 1010, ¶11. Buchanan further notes that the twisted yarns have "substantially the same twist pattern since they are acted upon by the same apparatus 32." *Id.*, ¶13. Finally, Buchanan teaches that the two yarns are then converged in compression tube 38 and "pl[ied] together in a direction of twist … which is opposite to the bundle direction of twist" to form composite yarn 42 (orange-green). *Id.*, 3:50-4:5; Ex. 1003, ¶¶66-67.

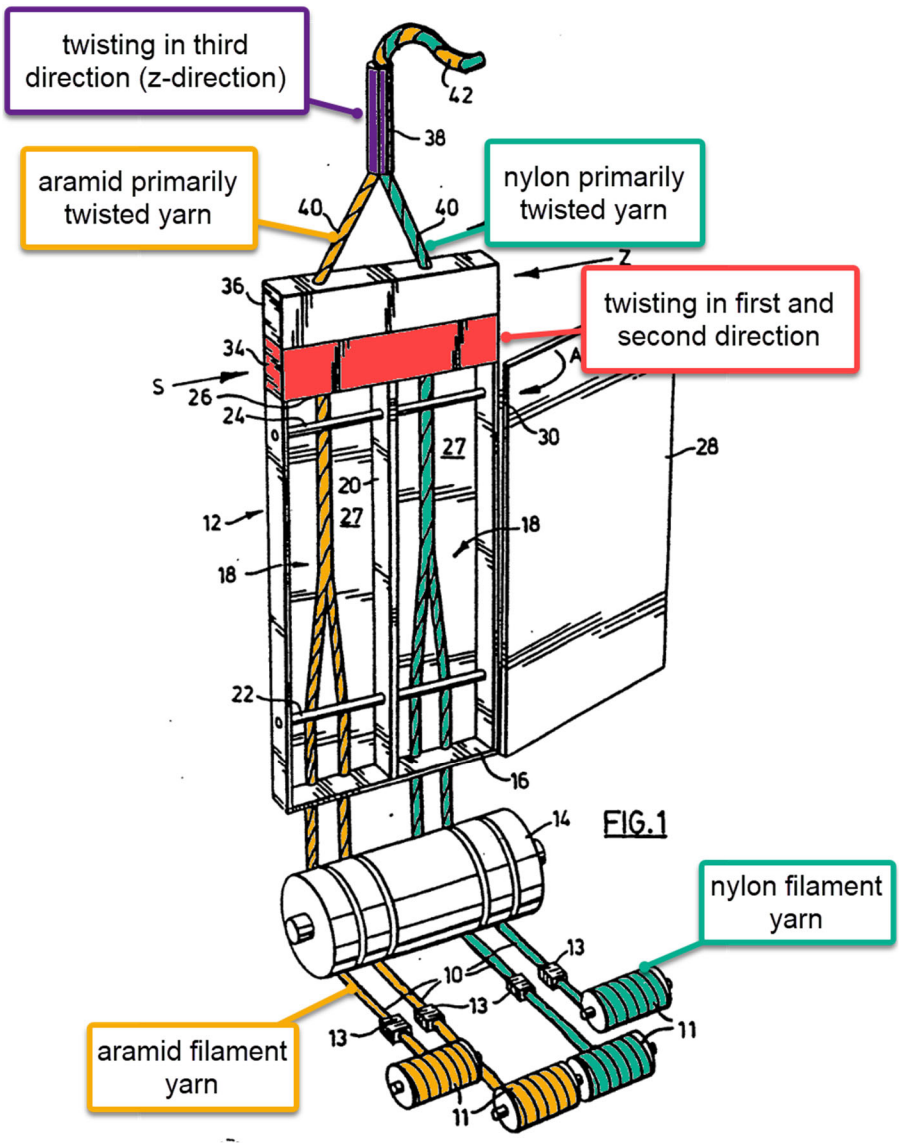

D. Fritsch (Ex. 1011)

U.S. Pat. App. Pub. No. 2003/0159768 ("Fritsch") was published August 28, 2003 and is prior art under at least 35 U.S.C. §102(a)(1).

Fritsch teaches a method for creating a cord with an "unbalanced configuration" which "means that at least two yarns [of the cord] have different

lengths." Ex. 1011, ¶19. Fritsch notes that its method results in a "hybrid cabled cord of polymeric materials having excellent properties at a reduced capital cost and is useful as a tire cord." *Id.*, ¶2. Fritsch explains that in hybrid cords (*i.e.,* where the cord is made up of multiple types of material), it is typical for one yarn having a higher modulus (*i.e.*, a material's ability to resist being deformed) will have a higher twist level compared to the yarn with a lower modulus so that the twisted yarns will break simultaneously. *Id.*, ¶5. Fritsch notes that conventionally, the design of cabling machines "is intended to achieve a balanced tension control in the cabled cord produced which effectively means that the two yarns are pulled off with the same rate and thus equal lengths are incorporated into the cabled cord." *Id.*, ¶24. However, Fritsch's inventors discovered that "modulat[ing] the tension on the individual plies" can result in an "unbalanced configuration" where one yarn is longer than the other when untwisted. This results in a cord with "greater tensile strength retention." *Id.*, ¶27. Fritsch describes the difference in length of the yarns as a Coring level, which is the percentage difference in length of the higher modulus yarn relative to the lower modulus yarn. *Id.*, ¶¶19-20. For example, a Coring level of 5% means the higher modulus yarn is 5% longer than the lower modulus yarn. *Id.*; Ex. 1003, ¶¶68-69.

Fritsch provided experimental results that showed an improvement with unbalanced configurations, *i.e.* a non-zero Coring level. Ex. 1003, ¶70. Specifically,

Fritsch tested 10 "inventive examples" using PEN (polyethylene napthalate) and PET (polyethylene terephthalate) materials, with Coring level ranges from -15% to 15%, and compared their physical properties to three cords with 0% Coring level. These results are shown in Table 1, reproduced below. *Id.*, ¶40. The table shows that having a positive Coring level results in "a combination of a high breaking strength and a high elongation at break." *Id.*, ¶41. Fritsch notes that the desired combination of "physical properties (breaking strength, elongation at break, energy to break and modulus) can be optimized by an appropriate coring level." *Id.*

TABLE 1

Inv. Ex.	Comp. Ex.	Cord components	Coring level	Breaking Strength (N)	Elongation at Break (%)	LASE at 1.6% (N)	LASE at 3% (N)	Elongation (%) at 45 N
	A	PEN/PEN	0	199.2	10.4	21.4	48.7	2.7
1		PEN/PET	−15%	154	n.d.	n.d.	n.d.	n.d.
2		PEN/PET	−12.2%	154.3	9.3	20.8	45.4	3.1
3		PEN/PET	−9.2%	160.8	10.2	17.5	40.5	3.4
4		PEN/PET	−6.3%	164.7	11.1	16.5	32.8	4.0
5		PEN/PET	−3.2%	170.1	11.4	15.7	33.9	3.9
	B	PEN/PET	0	180.5	12.4	15	32.7	4.1
6		PEN/PET	0.9%	184	12.8	14.6	33.7	4.1
7		PEN/PET	4.5%	184.5	13.8	13.8	30.8	4.3
8		PEN/PET	7.7%	183.5	15.4	13.2	28.6	4.6
9		PEN/PET	13.9%	170.4	16.3	12.8	27.6	4.7
10		PEN/PET	15%	170	n.d.	n.d.	n.d.	n.d.
	C	PET/PET	0	177.7	18.9	12.5	26.2	5.2

VIII. GROUND 1: TAMURA IN VIEW OF FRITSCH, ROWAN, AND OPTIONALLY BUCHANAN RENDERS OBVIOUS CLAIMS 1-3

Tamura describes a nylon yarn and an aramid yarn twisted in one direction, which are then twisted in an opposite direction to form a hybrid tire cord. Rowan

describes a single twister that twists two single yarns in one direction to form two twisted yarns, and then continuously twist the yarns in an opposite direction to form a cord, especially in view of Buchanan which discloses simultaneously twisting yarns in one direction. And Fritsch discloses applying less tension to one yarn during twisting so that it is 0.5% to 2.5% longer than the other yarn.

As explained below, a POSITA would have been motivated to combine these references. Ex. 1003, ¶¶71-73.

A. Motivation to Combine

1. Motivation to Combine Tamura with Rowan

A POSITA would have been motivated to combine Tamura's teachings of a hybrid tire cord with Rowan's single twister apparatus. Ex. 1003, ¶¶74-82.

Rowan teaches that the two-step process of producing a raw tire cord, *i.e.* twisting a single thread of yarn into a ply, and twisting two or more plies into a cord, could be "combine[d] … into a single machine," such that the steps are performed simultaneously and continuously. Ex. 1007, 4:3-14, 5:50-53. Tamura also teaches the same two-step process for producing a raw cord, and a POSITA would have been motivated to combine Tamura's two-step process with Rowan's teachings of a single apparatus for performing the same steps simultaneously and continuously. Ex. 1003, ¶75.

Rowan itself teaches the benefits of using its single apparatus. Ex. 1003,

¶¶76-77. Rowan notes that, in the prior art, a "ring twist process" performed the two steps using "separate and independently operated machines" for each step. Ex. 1007, 4:15-24. Rowan teaches that such a process "is laborious and expensive," because such "conventional processes involve a number of individual steps and multiple transfers of product," which are "labor and cost intensive." *Id.*, 4:15-24, 1:38-51. Rowan explains that carrying out "a one-machine process … eliminates the multiple package handling and multi-million dollar capital requirements" for separate machinery for each step. *Id.*, 2:3-15. Rowan goes on to explain that "[t]hese machines combine the ply and twisting step into one operation, thus rendering the tire cord production process more efficient and cost effective." *Id.*, 1:53-61. Another benefit of the machine's ability to form cords continuously is that they "produce larger package sizes and improve quality by requiring fewer knows or splices in the final cord product." *Id.*

Thus, a POSITA would have been motivated to use Rowan's single apparatus to perform Tamura's two-step process as it would lead to less cost, faster production times, better yields, and an overall increase in manufacturing efficiency. Ex. 1003, ¶77; Ex. 1007, ¶39 ("This combination significantly reduces the cost and space required in the conversion operation."); *see also In re Dilnot*, 50 C.C.P.A. 1446, 1453 (CCPA 1963) ("It is, however, well within the expected skill of a technician to operate a process continuously."); *NL Indus. v. Exploration Logging, Inc.*, No. 90-

1040, 1990 WL 140489, *2 (Fed. Cir. 1990) ("No technical modification would be necessary, because the same operation is just repeated. The evidence in the record supports the conclusion that repeating the comparing process would have been obvious to one of ordinary skill in the art.").

Other references also teach the benefits of using a single machine. Ex. 1003, ¶78. For example, Fritsch notes that conventional "ring-twister machine[s]" are "disadvantageous as it requires multiple steps to yield the final product; the constituent yarns must first be twisted separately and then combined in another step to be twisted into a cabled cord." Ex. 1011, ¶5. Fritsch describes "a direct cabling machine" that can "operate at considerably higher speeds (30-50% greater) than conventional ring twisters," because they "complete the production of cabled cord in one step whereas ring twisters require two steps." *Id.*, ¶23.

A POSITA would have been further motivated to combine Tamura and Rowan because Rowan expressly contemplates using its one-machine process with the process described in Tamura for forming a hybrid cord. Ex. 1003, ¶79. As discussed above, Rowan describes a two-step process where a single thread of yarn is twisted into a twisted yarn, and then multiple twisted yarns are twisted into a tire cord. This is the same process described in Tamura. Moreover, Rowan notes that it is directed to tire cords made from "nylons" and "aramids," the two materials disclosed by Tamura. Ex. 1007, 6:40-43. Thus, a POSITA would understand that

Rowan's teachings is simply the use of a known technique to improve a similar device (Tamura) in the same way.

In addition, Rowan teaches that its one-machine process also includes treatment of the cord. Ex. 1007, 2:15 ("[A] one-machine cabled and treated cord unit ('OCT')."). Specifically, once the cord is formed, it is treated via the "treating subunit 328." *Id.*, 7:65-8:8. The treatment process involves dipping the tire cord in an adhesion agent such as RFL, using ambient air to dry the raw cord, and then curing the cord by applying heat. *Id.*, 8:66-9:28, Table 1. Accordingly, a POSITA would be further motivated to combine Tamura and Rowan because Rowan's single machine apparatus also includes a treatment step, which provides the benefits of "elminat[ing] the handing and transport operations" that the prior art required for treating a tire cord. Ex. 1003, ¶80.

A POSITA would have had a reasonable expectation of success in combining Tamura with Rowan. As discussed above, Rowan's one-machine process applies to the same two-step process and the same nylon and aramid materials described in Tamura. Accordingly, a POSITA would expect the combination to successfully result in Tamura's teachings being performed in Rowan's machine such that the steps are performed simultaneously and continuously. Ex. 1003, ¶81.

Finally, Tamura, Rowan, and the '663 patent are analogous art, because they are all directed to the same field of endeavor, specifically, the manufacture of cords

from twisting yarn. Ex. 1006, Abstract ("A large-diameter rubber hose formed using vulcanized rubber reinforced by compounding fiber fabric and/or fiber cord, characterized in that the fiber fabric and/or fiber cord is composed of a composite fiber of aramid fiber and nylon fiber."); Ex. 1007, Abstract ("The method comprises the steps of twisting two or more yarns together to form a cable … performed on one machine without intermediate take-up."); Ex. 1001 at Abstract ("The hybrid tire cord includes a nylon primarily twisted yarn and an aramid primarily twisted yarn, wherein the nylon primarily twisted yarn and the aramid primarily twisted yarn are secondarily twisted together"); Ex. 1003, ¶82.

2. Motivation to Optionally Combine Tamura and Rowan with Buchanan

To the extent Patent Owner argues that Rowan does not expressly depict that its single apparatus performs the individual twisting of the two yarns simultaneously (although it is expressly described), a POSITA would have been motivated to further combine Tamura and Rowan with Buchanan. Ex. 1003, ¶¶83-87.

Like Rowan, Buchanan describes a single apparatus that simultaneously twists two types of threads of yarns into plies and then continuously twists the plies into a cord. Ex. 1003, ¶84. Buchanan expressly teaches that the two yarns have "substantially the same twist pattern since they are acted upon by the same apparatus," *i.e.* they are twisted simultaneously, as depicted below in the annotated Figure 1.

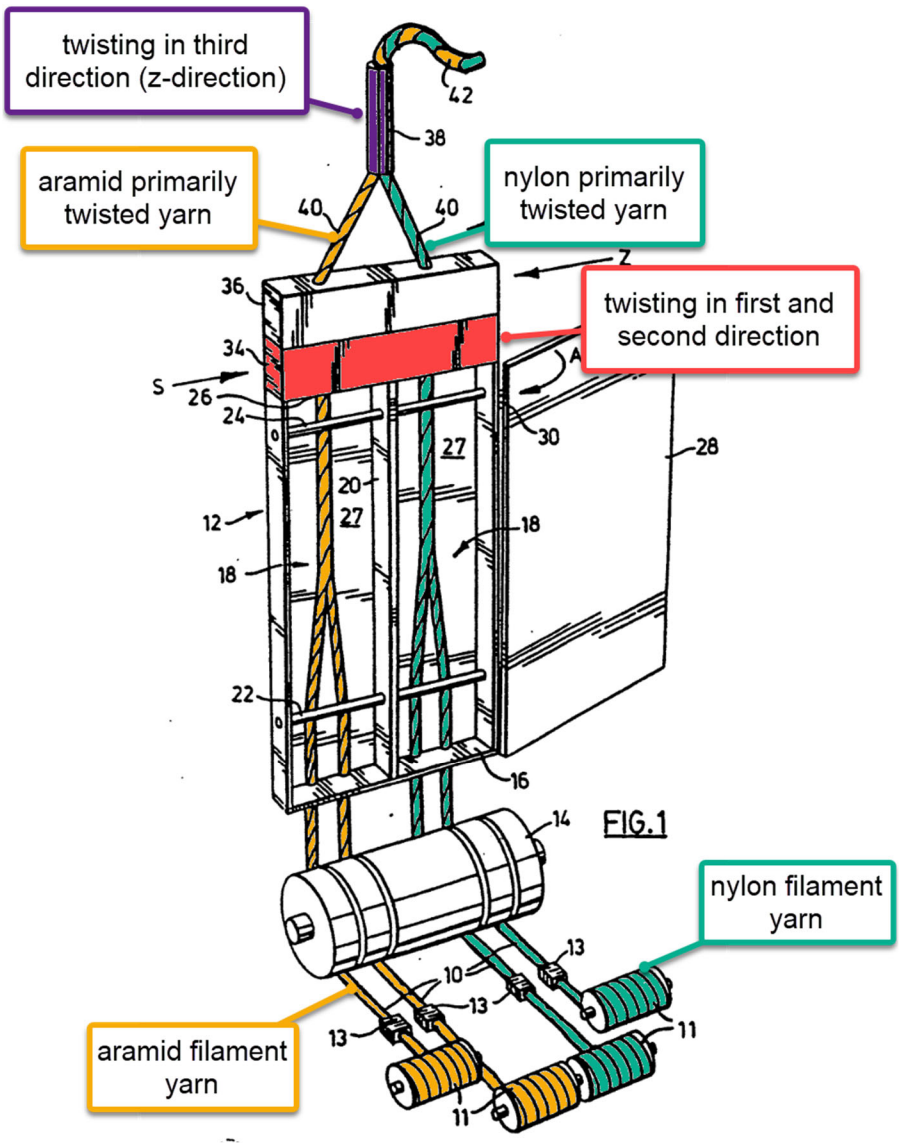

A POSITA would have been motivated to combine these elements because Rowan expressly teaches that in the first step of its two-step process, "[t]he yarn is twisted in … a twisted single yarn." Ex. 1007, 4:6-14. However, Rowan does not explicitly depict this first twisting step in the illustrations of its apparatus. Thus, a POSITA would have been motivated to look to Buchanan in order to give effect to Rowan's teachings, specifically an apparatus that twists a thread into a yarn, and

does so ***simultaneously*** in order that the yarns can be twisted into a cord ***continuously*** as taught by Rowan. Ex. 1003, ¶85. A POSITA would understand that simultaneity in the twisting of the yarns is needed in order that they are ready to be twisted to form a cord in Rowan's continuous process that lacks "intermediate take-up." *Id.*; Ex. 1007, Abstract. If the yarns are not twisted at the same time, then the apparatus could not "treat[] the cord in a continuous process without intermediate take-up" as required by Rowan. Ex. 1007, 7:23-24.

Accordingly, Buchanan's teachings of simultaneous twisting are necessary to give effect to Rowan's teachings of a one-machine continuous process for twisting cords. Thus, a POSITA would have been motivated to incorporate Buchanan's teachings for all the same reasons discussed above that Rowan provided as benefits of its one-machine process. Ex. 1003, ¶86.

A POSITA would have had a reasonable expectation of success in combining Buchanan with Tamura and Rowan. The combination would simply involve the application of Buchanan's simultaneous twisting with Rowan's single apparatus that is described as performing yarn twisting. Ex. 1003, ¶87.

Buchanan is analogous art with Tamura, Rowan, and the '663 patent, as it is also directed to the same field of endeavor of manufacturing cords from twisting strands of yarn. Ex. 1010, Abstract ("A composite yarn (42) comprising at least two yarn bundles plied together"); Ex. 1003, ¶88.

3. Motivation to Combine Tamura with Fritsch

A POSITA would have been motivated to combine Tamura, Rowan (and optionally Buchanan) with Frisch's teachings of applying different tension to yarns twisted to form a cord with one yarn being longer than the other. Specifically, a POSITA would have been motivated to alter the tension so that the aramid yarn is 0.9% longer than the nylon yarn, since Fritsch teaches that such a difference provides beneficial improvements to the physical properties of the tire cord. Ex. 1003, ¶¶89-96.

Fritsch teaches a method for creating a cord with an "unbalanced configuration" which "means that at least two yarns [of the cord] have different lengths." *Id.*, ¶19. Fritsch further teaches that an unbalanced configuration can be achieved by changing the tension applied to each yarn during twisting. *Id.*

A POSITA would have been motivated to combine these teachings in view of the benefits described by Fritsch. Ex. 1003, ¶¶90-91. Specifically, Fritsch notes that its method results in a "hybrid cabled cord of polymeric materials having excellent properties at a reduced capital cost and is useful as a tire cord." Ex. 1011, ¶2. Fritsch explains that in hybrid cords (*i.e.* where the cord is made up of multiple types of material), it is typical for one yarn having a higher modulus (*i.e.* a material's ability to resist being deformed) will have a higher twist level compared to the yarn with a lower modulus so that the twisted yarns will break simultaneously. *Id.*, ¶5. Fritsch

notes that conventionally, the design of cabling machines "is intended to achieve a balanced tension control in the cabled cord produced which effectively means that the two yarns are pulled off with the same rate and thus equal lengths are incorporated into the cabled cord." *Id.*, ¶24. However, Fritsch's inventors discovered that "modulat[ing] the tension on the individual plies" can result in an "unbalanced configuration" where one yarn is longer than the other when untwisted. This results in a cord with "greater tensile strength retention." *Id.*, ¶27. Fritsch describes the difference in length of the yarns as a Coring level, which is the percentage difference in length of the higher modulus yarn relative to the lower modulus yarn. *Id.*, ¶¶19-20. For example, a Coring level of 5% means the higher modulus yarn is 5% longer than the lower modulus yarn. *Id.*; Ex. 1003, ¶91.

Fritsch provided experimental results that showed an improvement with unbalanced configurations, *i.e.* a non-zero Coring level. Specifically, Fritsch tested 10 "inventive examples" using PEN (polyethylene napthalate) and PET (polyethylene terephthalate) materials, with Coring level ranges from -15% to 15%, and compared their physical properties to three cords with 0% Coring level. Ex. 1003, ¶92. These results are shown in Table 1, reproduced below. *Id.*, ¶40. The table shows that having a positive Coring level results in "a combination of a high breaking strength and a high elongation at break." *Id.*, ¶41. Fritsch notes that the desired combination of "physical properties (breaking strength, elongation at break,

energy to break and modulus) can be optimized by an appropriate coring level." *Id.*

TABLE 1

Inv. Ex.	Comp. Ex.	Cord components	Coring level	Breaking Strength (N)	Elongation at Break (%)	LASE at 1.6% (N)	LASE at 3% (N)	Elongation (%) at 45 N
	A	PEN/PEN	0	199.2	10.4	21.4	48.7	2.7
1		PEN/PET	−15%	154	n.d.	n.d.	n.d.	n.d.
2		PEN/PET	−12.2%	154.3	9.3	20.8	45.4	3.1
3		PEN/PET	−9.2%	160.8	10.2	17.5	40.5	3.4
4		PEN/PET	−6.3%	164.7	11.1	16.5	32.8	4.0
5		PEN/PET	−3.2%	170.1	11.4	15.7	33.9	3.9
	B	PEN/PET	0	180.5	12.4	15	32.7	4.1
6		PEN/PET	0.9%	184	12.8	14.6	33.7	4.1
7		PEN/PET	4.5%	184.5	13.8	13.8	30.8	4.3
8		PEN/PET	7.7%	183.5	15.4	13.2	28.6	4.6
9		PEN/PET	13.9%	170.4	16.3	12.8	27.6	4.7
10		PEN/PET	15%	170	n.d.	n.d.	n.d.	n.d.
	C	PET/PET	0	177.7	18.9	12.5	26.2	5.2

Accordingly, a POSITA would have been motivated to use one or more of these Coring levels with Tamura to achieve improved physical properties. Ex. 1003, ¶93. In particular, a POSITA would have been motivated to use the Coring level of 0.9%, because it provides a good combination of high Breaking Strength, Elongation at Break, LASE at 1.6% and LASE at 3%. *Id.*, ¶40. Even though Fritsch describes a Coring level of 0.9% for a PEN/PET hybrid cord, a POSITA would have understood that the disclosed benefits would also apply to an aramid/nylon hybrid cord. Ex. 1003, ¶94. First, Fritsch itself contemplates an aramid/nylon hybrid cord as one of its inventive cords. Ex. 1011, cls. 8-9. Second, an aramid/nylon hybrid cord uses material with a higher modulus (aramid) and material with a lower modulus (nylon), which is similar to a PEN/PET hybrid cord, as Fritsch describes

PEN as having a higher modulus and PET having a lower modulus. Ex. 1011, ¶¶20-21. Finally, Fritsch expressly teaches that cords using aramid and nylon are "[p]olymeric yarns useful in the inventive method and product," and expressly states such cords preferably have a coring level between -25% and 25%. *Id.*, ¶29.

Although Fritsch is directed to a cord with Coring level between 3% to 15%, Fritsch's results still show a benefit with using a Coring level of 0.9%, and thus a POSITA would be motivated to achieve a Coring level of 0.9%. Ex. 1003, ¶93. Obviousness does not require a showing that "a combination is the *best* option, only that it be a *suitable* option." *Intel Corp. v. PACT XPP Schweiz AG*, 61 F.4th 1373, 1380 (Fed. Cir. 2023); *see also Honeywell International Inc. v. 3G Licensing S.A.*, 124 F.4th 1345, 1355 (Fed. Cir. 2025) ("[O]bviousness does not require that a particular combination must be the preferred, or the most desirable, combination").

A POSITA would have had a reasonable expectation of success in combining the references. Fritsch's teachings could be readily applied to the single apparatus described in Rowan, since Rowan describes that it has tension controls. Specifically, Rowan teaches that the two yarns are tensioned with "tensioning devices" such as "brake[s]," "paired driver rolls," and "skewed rolls." Ex. 1007, 7:38-43. Fritsch describes using the same tension devices. Ex. 1011, ¶23 ("This machine is designed and intended to obtain balanced cord constructions by means of rolls and brakes that control the yarn tension"). Moreover, Fritsch explains that its method is useful for

all sorts of yarn materials, including "aramid, nylon-6, nylon-6,6 and nylon-4,6," the same materials disclosed by Tamura. Ex. 1011, ¶29. Fritsch specifically teaches forming such an unbalanced configuration of hybrid cord using nylon-6 yarn and aramid yarn or using nylon-6,6 yarn and aramid yarn. Ex. 1011, cls. 8 and 9. Thus, a POSITA would have expected the combination to yield the predictable result of improving the physical properties of Tamura's tire cord. Ex. 1003, ¶95.

Fritsch is analogous art to Tamura and the '663 patent, because it is directed to the same field of endeavor of manufacturing cords from twisting strands of yarn. Ex. 1011, Abstract ("The present invention is directed to a hybrid cabled cord comprising: at least two yarns having different properties and an unbalanced configuration wherein the hybrid cabled cord has improved tensile strength retention."); Ex. 1003, ¶96.

B. Claim 1

1. 1[pre]: A method of manufacturing a hybrid tire cord comprising:

Tamura discloses a tire cord made from twisting two primarily twisted yarns of different materials: nylon and aramid, *i.e.* ***a hybrid tire cord***. Ex. 1006, ¶11 ("[A] large-diameter rubber hose … reinforced by compounding fiber fabric and/or fiber cord, characterized in that the fiber fabric and/or ***fiber cord is composed of a composite fiber of aramid fiber and nylon fiber***."); ¶18 ("In the present invention, the above-mentioned aramid fibers and nylon fibers are composited to form

aramid/nylon composite fiber cords and composite fiber fabrics."). As discussed below in limitations 1[a], 1[b], and 1[c], Tamura discloses a plied yarn made by twisting an aramid primarily twisted yarn and a nylon primarily twisted yarn. Ex. 1003, ¶¶97-98.

As discussed above, the '663 patent specification describes a "tire cord" as including either a raw cord or a dip cord. Ex. 1001, 5:20-23. Tamura's hybrid cord is a ***raw cord*** because it is formed by twisting two yarns and is therefore untreated at the time it is formed. Ex. 1003, ¶99.

2. 1[a]: a first step of primarily twisting an aramid filament yarn in a first direction to form an aramid primarily twisted yarn;

Tamura discloses that the "composite fiber cord is obtained by ***lower twisting*** [*i.e.* ***twisting in a first direction***] a predetermined number of aramid fibers [*i.e.* ***aramid filament yarn***] and nylon fibers, each of which is ***individually twisted***, and then upper twisting the resulting fibers together." Ex. 1006, ¶18. The individually twisted aramid fibers form ***an aramid primarily twisted yarn*** because it is a aramid filament yarn twisted in one direction. Ex. 1003, ¶¶100-01.

According to Table 1, the "lower twist" is a Z-direction twist. Ex. 1006, ¶36, Table 1. Ex. 1003, ¶102.

	Fiber material						Aramid fiber fineness ratio (%)	Total fineness (dt)	Number of twists (twists/10 cm)			
	Aramid fiber		N66		PET				Upper twist (S)	Lower twist (Z)		
	(dt)	(piece)	(dt)	(piece)	(dt)	(piece)				Aramid fiber	N66	PET
1			1400	2			0	2800	39		39	
2					1670	2	0	3340	39			39
1	1670	1	1400	1			54.4	3070	36	36	36	
2	1670	1	1400	1			54.4	3070	31	31	31	
3	1670	1	1400	1			54.4	3070	31	31	23	

3. 1[b]: a second step of primarily twisting a nylon filament yarn in a second direction to form a nylon primarily twisted yarn, the second step and the first step being conducted simultaneously; and

"a second step of primarily twisting a nylon filament yarn in a second direction to form a nylon primarily twisted yarn": Tamura discloses that the "composite fiber cord is obtained by ***lower twisting*** [*i.e.* ***twisting in a second direction***] a predetermined number of aramid fibers and nylon fibers [*i.e.* ***nylon filament yarn***], each of which is ***individually twisted***, and then upper twisting the resulting fibers together." Ex. 1006, ¶18. The individually twisted nylon fibers form ***a nylon primarily twisted yarn*** because it is a nylon filament yarn twisted in one direction. Ex. 1003, ¶¶103-04.

According to Table 1, the "lower twist" is a Z-direction twist. Ex. 1006, ¶36, Table 1. Ex. 1003, ¶105.

	Fiber material						Aramid fiber fineness ratio (%)	Total fineness (dt)	Number of twists (twists/10 cm)			
	Aramid fiber		N66		PET				Upper twist (S)	Lower twist (Z)		
	(dt)	(piece)	(dt)	(piece)	(dt)	(piece)				Aramid fiber	N66	PET
1			1400	2			0	2800	39		39	
2					1670	2	0	3340	39			39
1	1670	1	1400	1			54.4	3070	36	36	36	
2	1670	1	1400	1			54.4	3070	31	31	31	
3	1670	1	1400	1			54.4	3070	31	31	23	

"the second step and the first step being conducted simultaneously": Tamura discloses that the nylon thread and the aramid thread are both "lower twist[ed]," before the two yarns are "upper twist[ed] … together." Ex. 1006, ¶18. A POSITA would understand that both threads being "lower twist[ed]" means both threads are twisted ***simultaneously***. Ex. 1003, ¶106.

Alternatively, Rowan discloses a single apparatus that simultaneously twists two types of single threads of yarn into twisted filament yarns and then continuously twists the two twisted filament yarns into a cord. Ex. 1003, ¶¶107-08. As discussed above, a POSITA would have found it obvious to combine the Rowan's teachings with Tamura.

Specifically, Rowan teaches that, in the prior art, a "ring twist process" was used to "produce a cable in two steps" where "[t]he yarn is twisted in a ply," which "means a twisted single yarn," *i.e.* what the '663 patent calls a ***primarily twisted yarn***, and then the "ply is … twisted into a cable of two or more plies," *i.e.* what the '663 patent calls a ***plied yarn*** or ***raw cord***. Ex. 1007, 4:5-14. Rowan notes that in

the prior art, these two steps "consist[] of separate and independently operated machines dedicated respectively to twisting the yarn into a ply'" and "twisting the ply into a cable on a separate machine." *Id.*, 4:15-24. Such a process "is laborious and expensive." *Id.*

Rowan teaches that the industry "in many instances now has replaced the ring twist operations with equipment that ***combines both steps into a single machine***, commonly referred to as a direct [c]able unit ('DCU')," *i.e.* ***a single twister***. Ex. 1007, 5:50-53. Rowan's DCU is depicted below in Figure 4 and clearly depicts a single apparatus. Ex. 1003, ¶109.

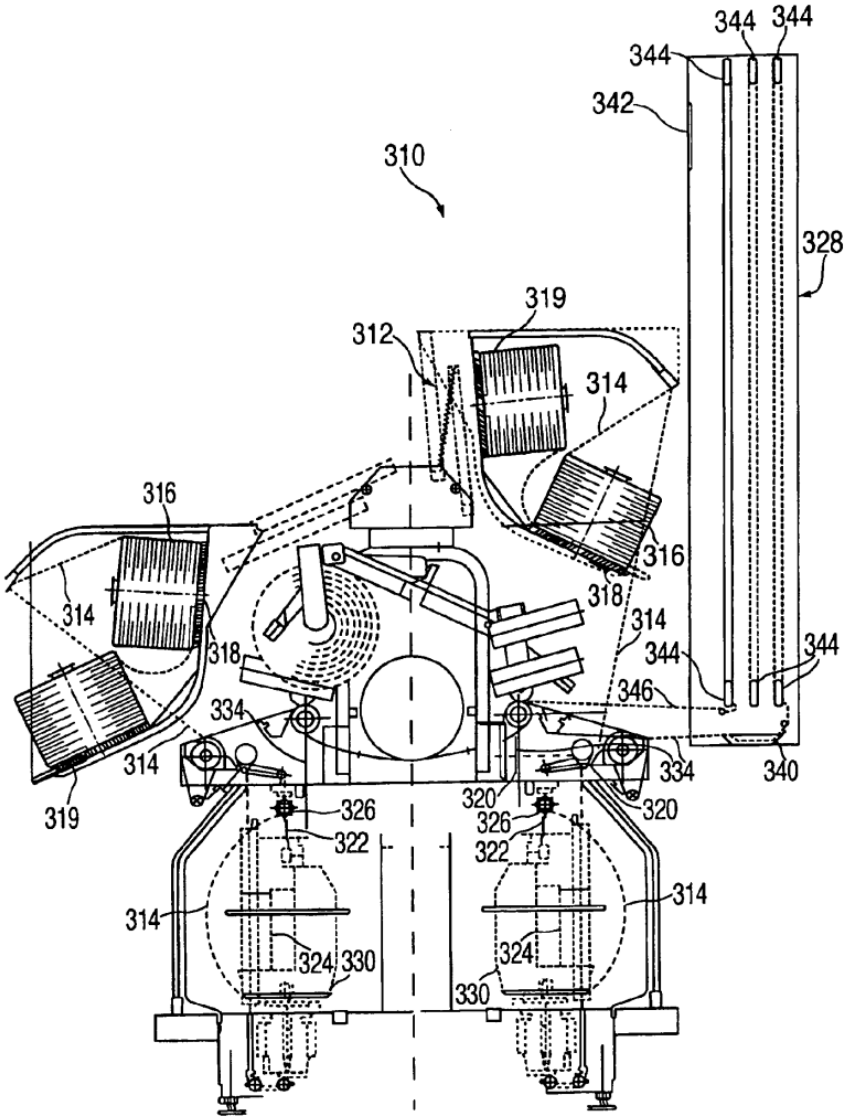

FIG. 4

Figure 5 provides an abstract schematic of the DCU that is more readily ascertainable. Ex. 1003, ¶110. Rowan explains that "outer yarn 314" (orange) is pulled from a "supply package 316" and is pretensed by "brake 320." Ex. 1007, 7:36-39. The brake "pretense[s] the yarn[] for twisting." *Id.*, 7:43-45. Similarly, "inner yarn 322" (green) is drawn from "inner supply package 324" and is tensioned

by "brake 326." Ex. 1007, 7:47-53. The tension of the two brakes may be "maintained via tension measuring devices." *Id.*, 7:53-55. The two yarns are then "twisted into a cord 334" (orange-green). *Id.*, 7:61-64.

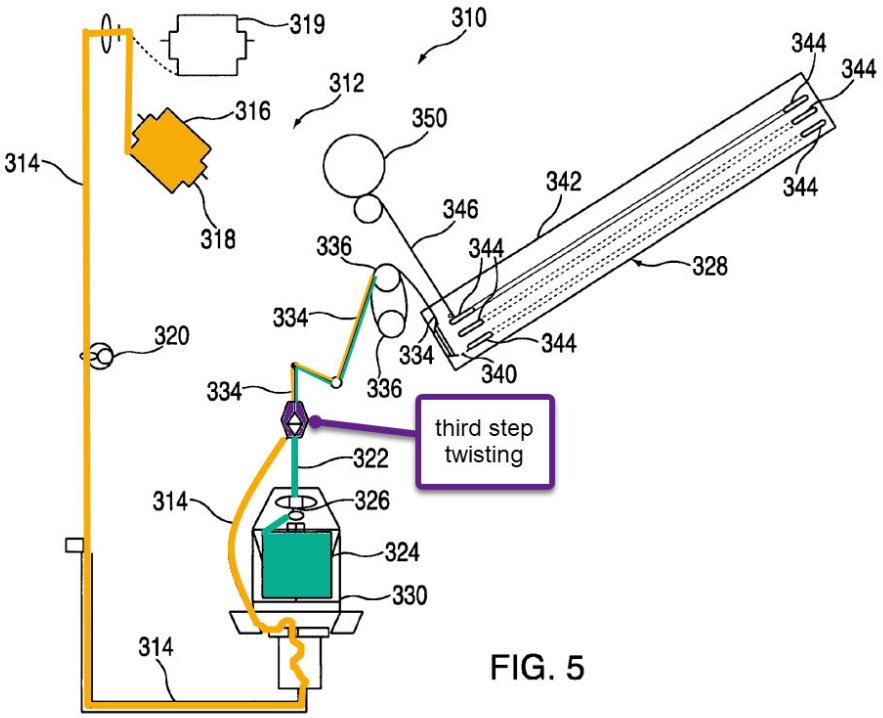

FIG. 5

Based on the foregoing, a POSITA would understand that the two yarns are pulled from a package, tensioned and twisted into a cord ***simultaneously***. Ex. 1003, ¶111. As discussed above, Rowan describes that the DCU apparatus twists each individual yarn strand into "a twisted single yarn," *i.e.* ***first and second step***, prior to being twisted together into a cord. Ex. 1007, 4:5-14. Although Figure 5 does not depict where the yarns are individually twisted into a twisted single yarn, a POSITA would understand that the twisting, *i.e.* ***first and second step***, must occur

simultaneously since each yarn is removed from the spool, tensioned, twisted into a cord, and treated in one "continuous process without intermediate take-up." Ex. 1007, 7:22-24; Ex. 1003, ¶111.

However, to the extent Patent Owner asserts that Rowan's first and second twisting are not expressly described as being performed simultaneously, a POSITA would consider it obvious in view of Buchanan. Ex. 1003, ¶112. Buchanan discloses a single apparatus that simultaneously twists two types of threads into yarns and then continuously twists the yarns into a cord. Figure 1, as annotated below, depicts Buchanan's apparatus "for making a composite yarn." Ex. 1010, ¶9. In Figure 1, each strand of yarn is "unwound from packages" and is applied tension by "tensioning devices 13." *Id.*, ¶10. Although Figure 1 depicts that two strands are twisted into each "bundle," Buchanan does contemplate that a bundle "may have only one strand," which is consistent with Rowan, Tamura, and the recited claims where each twisted yarn has only one strand. *Id.*, ¶8. In the combination of Tamura, Rowan and Buchanan, Buchanan's apparatus would only have one strand per twisted yarn. Ex. 1003, ¶112.

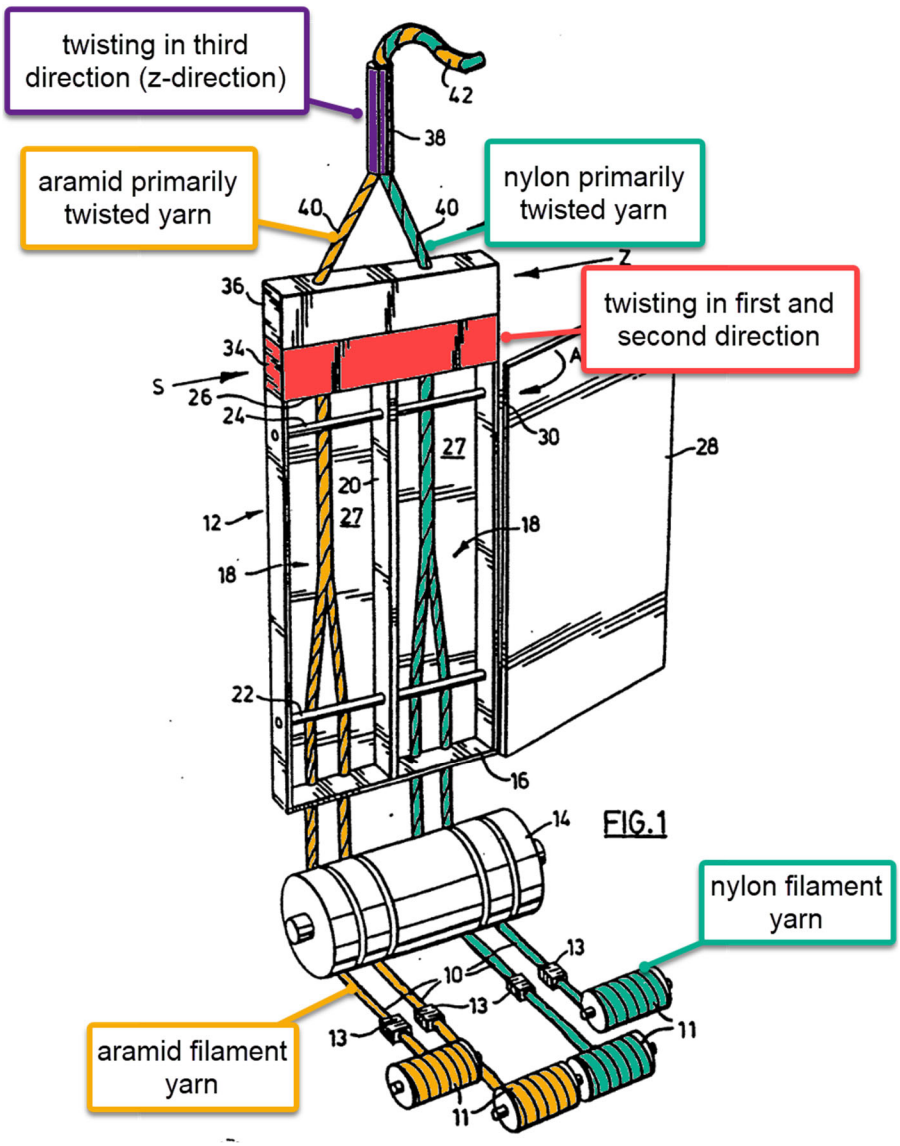

Buchanan teaches that a "twisting apparatus 32" (red) comprises a "lower air jet 34 for applying ***twist*** to the yarn in the S direction." Ex. 1010, ¶11. Buchanan further notes that the twisted yarns have "substantially the same twist pattern since they are acted upon by the same apparatus 32," *i.e.* they are twisted ***simultaneously***. *Id.*, ¶13. Although Buchanan also describes that "twisting apparatus 32" has an "upper air jet 34 for applying twist to the yarn in the [opposite] Z direction" that is

actuated alternately with the lower air jet (resulting in a yarn that has "alternating S and Z bundle directions of twist, with equally spaced nodes of zero twist in between), that mechanism is not necessary to include in this combination, since both Tamura and Rowan only describe a single direction of twist for the twisted yarns. *Belden Inc. v. Berk-Tek LLC*, 805 F.3d 1064, 1076 (Fed. Cir. 2015) ("[A] reference must be considered for everything it teaches by way of technology and is not limited to the particular invention it is describing and attempting to protect."); Ex. 1003, ¶113.

4. 1[c]: a third step of secondarily twisting the aramid primarily twisted yarn and the nylon primarily twisted yarn in a third direction to form a plied yarn, the third step being conducted continuously with the first and second steps,

"a third step of secondarily twisting the aramid primarily twisted yarn and the nylon primarily twisted yarn in a third direction to form a plied yarn": Tamura teaches a subsequent third step where the "individually twisted" aramid and nylon yarns (*i.e.* ***aramid and nylon primarily twisted yarns***) are "then upper twist[ed] … together," *i.e.* ***a third twist direction***. Ex. 1006, ¶18. This results in a ***plied yarn***. Ex. 1003, ¶¶114-15.

As discussed above, the '663 patent describes a "plied yarn" as "a yarn made by twisting two or more primarily twisted yarns together in one direction," which meets the description in Tamura. Ex. 1003, ¶115.

According to Table 1, the "upper twist" is an S-direction twist, which is the opposite of the lower twist. Ex. 1006, ¶36, Table 1; Ex. 1003, ¶116.

	Fiber material						Aramid fiber fineness ratio (%)	Total fineness (dt)	Number of twists (twists/10 cm)			
	Aramid fiber		N66		PET				Upper twist (S)	Lower twist (Z)		
	(dt)	(piece)	(dt)	(piece)	(dt)	(piece)				Aramid fiber	N66	PET
1			1400	2			0	2800	39		39	
2					1670	2	0	3340	39			39
1	1670	1	1400	1			54.4	3070	36	36	36	
2	1670	1	1400	1			54.4	3070	31	31	31	
3	1670	1	1400	1			54.4	3070	31	31	23	

"the third step being conducted continuously with the first and second steps": Tamura discloses that the "upper twist[ing]" of the two yarns occurs immediately after the two yarns are twisted from fibers. A POSITA would therefore understand that the final twisting is performed ***continuously*** with the previous steps. Ex. 1003, ¶117.

Alternatively, as discussed above, Rowan discloses a single apparatus that simultaneously twists two types of single threads into yarns and then continuously twists the yarns into a cord. Ex. 1003, ¶118. Following the twisting of single threads into twisted yarns, the two yarns are "twisted into a cord 334" (orange-green), *i.e.* ***the third twisting step***, in a "***continuous*** process," *i.e.* ***continuously with the first and second twisting steps***. Ex. 1007, 7:61-64, 7:23-24.

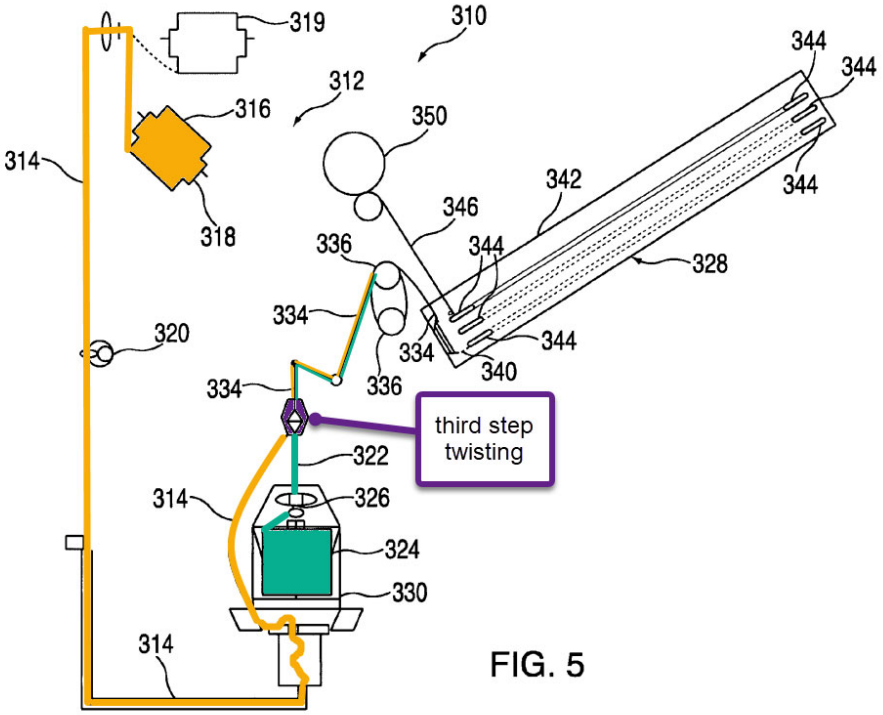

FIG. 5

Optionally, it would have been obvious to further include Buchanan, which teaches that the two yarns are then converged in compression tube 38 and "pl[ied] together in a direction of twist … which is opposite to the bundle direction of twist" to form composite yarn 42 (orange-green). *Id.*, 3:50-4:5. As can be seen in the below figure, the process is performed continuously by a single apparatus. Ex. 1003, ¶119.

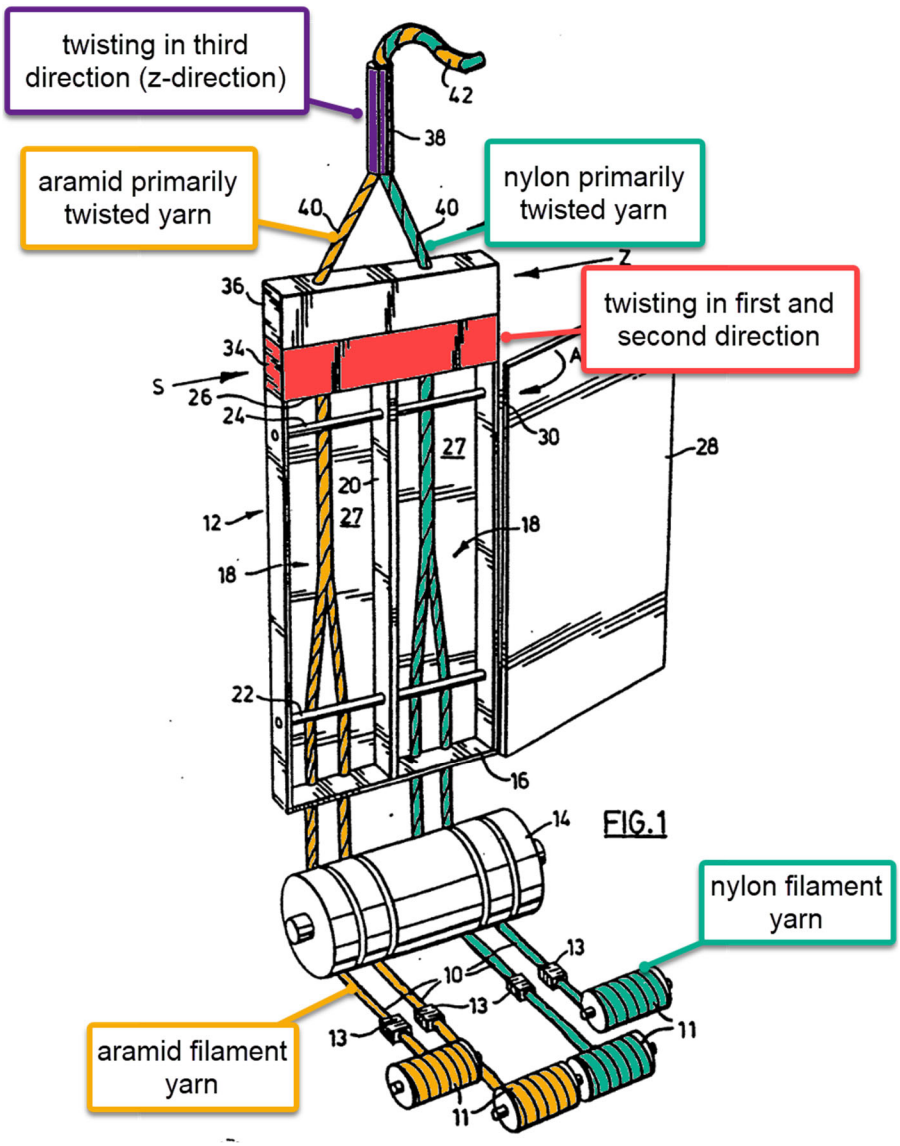

5. 1[d]: wherein the first, second and third steps are conducted by one twister,

As discussed above, Rowan teaches a single apparatus, *i.e.* ***one twister***, that performs all three steps. Ex. 1003, ¶120.

6. 1[e]: the second direction is the same as the first direction,

As discussed above for limitations 1[a] and 1[b], Tamura teaches that the aramid fibers (fibers that are twisted in a ***first direction***) and the nylon fibers (fibers

that are twisted in a ***second direction***) are "lower twist[ed]," in the ***same direction***, specifically the Z-direction. Ex. 1006, ¶¶18, 36, Table 1; Ex. 1003, ¶¶121-22.

	Fiber material						Aramid fiber fineness ratio (%)	Total fineness (dt)	Number of twists (twists/10 cm)			
	Aramid fiber		N66		PET				Upper twist (S)	Lower twist (Z)		
	(dt)	(piece)	(dt)	(piece)	(dt)	(piece)				Aramid fiber	N66	PET
1			1400	2			0	2800	39		39	
2					1670	2	0	3340	39			39
1	1670	1	1400	1			54.4	3070	36	36	36	
2	1670	1	1400	1			54.4	3070	31	31	31	
3	1670	1	1400	1			54.4	3070	31	31	23	

7. 1[f]: tension applied to the nylon filament yarn in the second step is higher than tension applied to the aramid filament yarn in the first step in such an amount that, if the secondary twist of the hybrid tire cord with a predetermined length were untwisted, the aramid primarily twisted yarn would be 1.005 to 1.025 times longer than the nylon primarily twisted yarn.

While Tamura does not expressly teach the amount of tension applied to the filament yarns, Fritsch discloses this limitation.

"tension applied to the nylon filament yarn in the second step is higher than tension applied to the aramid filament yarn in the first step": Fritsch discloses creating a cord with an "unbalanced configuration" by altering the tension applied to the yarns where one of the cord's yarns is longer than the cord's other yarn. Ex. 1003, ¶¶123-24.

Specifically, Fritsch is directed to creating a "cabled cord" by twisting two yarns, each of which is "a plurality of continuous fibers." Ex. 1011, ¶¶14, 16.

Fritsch also teaches that the cord can be a "hybrid cabled cord" where the two yarns have "different properties," because they are, for example, made from different materials. *Id.*, ¶15; Ex. 1003, ¶125.

The novelty of Fritsch is that it introduces a method for creating a cord with an "unbalanced configuration" which "means that at least two yarns [of the cord] have different lengths." *Id.*, ¶19. Fritsch teaches that an "unbalanced configuration" can be achieved by adjusting the tension controls of the twister that applies tension as the fibers are twisted into yarns. *Id.*, ¶¶24-25. In prior art methods, the tension on the yarns was "balanced," which "effectively means that the two yarns are pulled off with the same rate and thus equal lengths are incorporated into the cabled cord." *Id.*, ¶24. The inventors of Fritsch, however, noted that by changing the "tension on the individual plies," an unbalanced configuration can be achieved. *Id.*, ¶25. In particular, the tension on the yarns can be made unbalanced by "wrapping the two yarns around the butterfly pulley an unequal number of times." *Id.* The "yarn with more wraps," *i.e.* ***has higher tension applied***, will have "increased friction and thus reduced slippage so it is pulled less than the other yarn, and will have ***a lesser length*** in the resulting cabled cord." *Id.*, ¶25; Ex. 1003, ¶126.

Fritsch further teaches that the yarn with "higher modulus" will have a longer length than the yarn with "lower modulus," and therefore will have less tension applied during twisting. *Id.*, ¶¶20, 25. "Modulus" refers to a material's ability to

resist being deformed. Ex. 1003, ¶127. A POSITA would understand that aramid yarn has a higher modulus than nylon yarn. *Id.* Tamura confirms this, stating that "aramid fibers … are superior in … elastic modulus," whereas "nylon fibers reduces the overall modulus of the composite fiber." Ex. 1006, ¶¶15, 6.

As discussed above, it would have been obvious to apply Fritsch's teachings to Tamura. When combined, Tamura's nylon yarn, having a lower modulus, would have a ***higher tension applied*** than the aramid yarn, which has a higher modulus. This results in the aramid yarn having a longer length than the nylon yarn. Ex. 1003, ¶128.

"if the secondary twist of the hybrid tire cord with a predetermined length were untwisted, the aramid primarily twisted yarn would be 1.005 to 1.025 times longer than the nylon primarily twisted yarn": Fritsch teaches that the ratio of the lengths of the yarns is measured using a value called "coring level," which Fritsch discloses can be ***1.005 to 1.025 times longer***. Ex. 1011, ¶19. The "coring level" is measured by "taking a sample of one meter of cabled cord [*i.e.* ***hybrid tire core with a predetermined length***] and ***untwisting*** the cable in order to separate the two yarns which compose it," following which the two yarns "are then ***untwisted*** by the same number of turns as it took to separate the cable, and in the opposite direction, to yield the two yarns in their as-fed state," *i.e.* ***the hybrid tire cord is untwisted***. Ex. 1011, ¶19. The "coring level" is calculated as $Coring = (A - B)/B$ "wherein A is the

length of the yarn having the higher modulus," *i.e.* ***the aramid primarily twisted yarn***, and "B is the length of the yarn having the lower modulus," *i.e.* ***the nylon primarily twisted yarn***. *Id.*; Ex. 1003, ¶129.

When the higher modulus yarn is ***1.005 to 1.025 times longer*** than the lower modulus yarn, the Coring level is 0.005 to 0.025, or ***0.5% to 2.5%***. Ex. 1003, ¶130.

Fritsch teaches Coring levels of 0.5% to 2.5%. Fritsch mentions that a "[p]referred" Coring level is a "non-zero" value "no greater than about 25% and no less than about -25%," which includes the claimed range. Ex. 1011, ¶29; Ex. 1003, ¶131.

For example, in Table 1, one of the "inventive cords" that was tested had a Coring level of 0.9%. Ex. 1011, ¶40. Notably, this cord had a relatively high Breaking Strength of 184 (second highest among the tested cords) and a relatively high Elongation at Break percentage of 12.8%. *Id.* Fritsch notes that it is desirable to balance the two values. *Id.*, ¶41. The desirable breaking strength of this inventive cord is depicted in the below annotated Figure 2, which is a graph of the Coring level of the tested inventive cords against their Breaking Strength. Ex. 1003, ¶132.

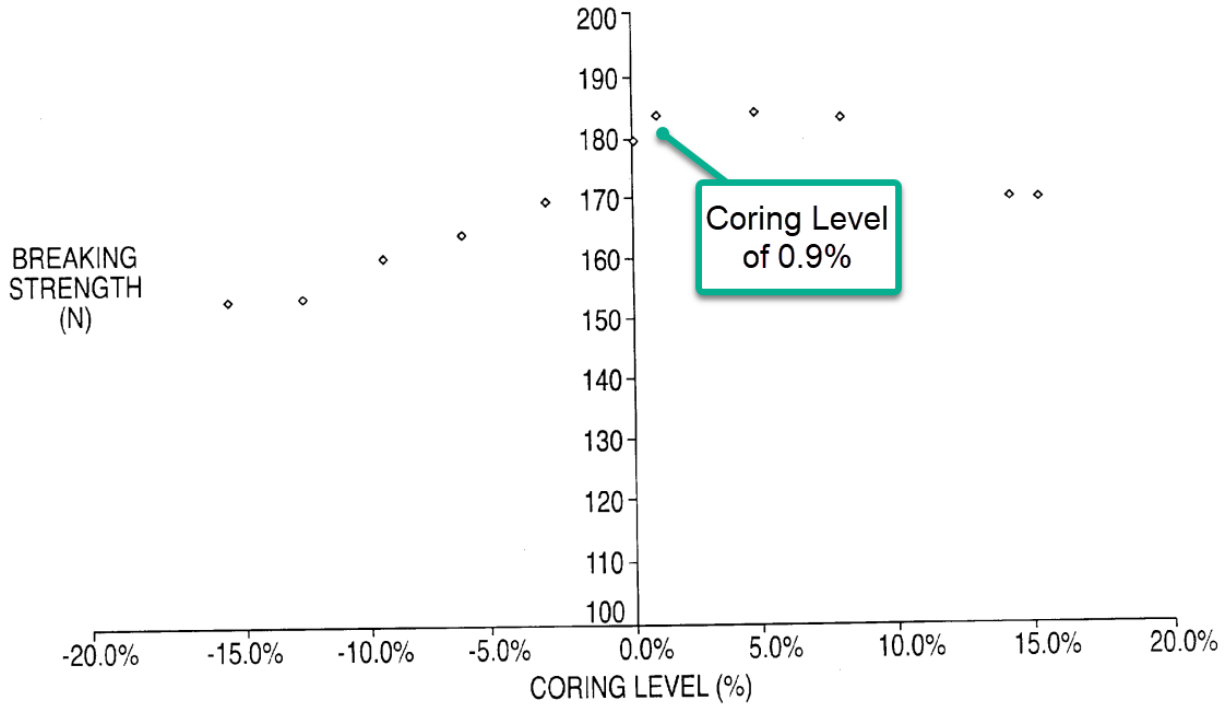

FIG. 2

As discussed above, a POSITA would have been motivated to combine Fritsch's teachings with Tamura, including the application of a Coring level of 0.9% to Tamura's aramid-nylon hybrid cord. Ex. 1003, ¶133.

C. Claim 2

Rowan teaches that its single apparatus for twisting a cord also puts the cord through the treatment process described in Claim 2. As discussed above, it would have been obvious to combine Tamura with Rowan's single apparatus. Ex. 1003, ¶134.

1. 2[pre]/2[a]: The method according to claim 1, further comprising: dipping the plied yarn in an adhesive agent solution;

Rowan teaches that in its "one-machine process," once the yarns are twisted

to form a cord (*i.e.* ***a plied yarn*** or ***raw cord***), it will also be treated. Ex. 1007, 2:15 ("[A] one-machine cabled and ***treated*** cord unit ('OCT')."); Ex. 1003, ¶135. Rowan teaches that once the cord is formed, it has "not [yet] been treated" and thus "remains in a raw state." Ex. 1007, ¶30. The cord then goes through a treatment process via the "treating subunit 328" of Rowan's single apparatus. *Id.*, 4:25-27.

In the first step of the treatment process, "the raw cabled cord 334," *i.e.* ***plied yarn***, "is coated with an adhesion agent," *i.e.* ***an adhesive agent solution***. *Id.*, 8:66-9:1. Rowan teaches "Resorcinal Formaldehyde-Latex (RFL)" as an example solution, which is the same solution described in the '663 patent. Ex. 1001, 8:33-35 ("A resorcinol formaldehyde Latex (RFL) solution … can be used as the adhesive agent solution."); Ex. 1003, ¶136.

Rowan teaches that the raw cord is "coated with an adhesion promoting ***dip***," which a POSITA would understand to mean that the raw cord is dipped into the solution. Ex. 1007, 2:26-27; *see also* 4:46-48 ("As used herein, the terms 'dip' or 'dipping' mean immersion of a … cord … in a processing liquid."); 8:45-49 ("DCU machines yield[] an unexpected capability to combine ***dipping*** and heat treating with the DCU"); Ex. 1003, ¶137.

2. 2[b]: drying the adhesive agent solution-impregnated plied yarn; and

Rowan teaches that in the next step of the treatment process, "[a]mbient" air is used to dry the coated raw cord. Ex. 1007, 10:24-28; Table 1 ("Drying Oven");

see also 8:17-18 ("The stretch and relax operation, often preceded by a ***drying step***"); Ex. 1003, ¶¶138-39.

3. 2[c]: thermally treating the dried plied yarn.

Rowan teaches that following the drying step, the cord is "heat[ed]" by a "heating unit" to "cur[e]" the cord, *i.e.* ***thermally treat the dried plied yarn***. Ex. 1007, 9:13-28; *see also* col. 9-10, Table 1 ("Curing Oven"). Rowan states that in a preferred embodiment, "the treating equipment is operated to achieve a temperature of approximately 200° C. for a residence time of approximately 30 seconds or less to ***cure the bonding agent***." *Id.*, 9:21-25; Ex. 1003, ¶¶140-41.

D. Claim 3

1. 3[pre]: The method according to claim 2, wherein the dipping, drying and thermal treatment steps are continuously conducted, and

Rowan teaches that its apparatus "cables and ***treats*** the cord in a ***continuous process without intermediate take-up***." Ex. 1007, 7:22-24; *see also* 8:57-63 ("It now will be appreciated that by controlling the tension on the cord, via the tensioning devices and the speed of the yarns from the DCU 312, to the treating subunit 328, the cord may be fed directly from the DCU to the treating equipment ***without intermediate take-up***, thus eliminating handling and transport operations between these two process steps."); Ex. 1003, ¶¶142-43.

2. 3[a]: tension applied to the plied yarn in the dipping, drying and thermal treatment steps is 0.4 g/d or less per cord.

Rowan teaches that tension is applied at all phases of the treatment process. First, Rowan teaches that its continuous process is achieved by "controlling the ***tension of the cord***, via the ***tensioning devices and the speed of the yarns*** from the DCU 312, to the treating subunit 328." Ex. 1007, 8:57-63. In other words, the initial dipping step occurs as the cord is under tension. Ex. 1003, ¶¶144-45. Rowan then discloses that "[t]he coated raw cord 334 is pulled through dip tray 340 of the ***heating unit 342*** under controlled tension via a system of tensioning devices 344." *Id.*, 9:4-6. Rowan further teaches that "[t]he desired properties [of treatment] may be achieved without stretching the cord simply by controlling the tension in the cord to allow for a small heat shrinkage to occur." *Id.*, 8:43-46. A POSITA would understand these teachings to indicate that tension is applied throughout the treatment process. Ex. 1003, ¶145. This is supported by Rowan's experiment that measured "the affects of the treating unit tension (stretch or relax) on the key properties of the treated cord." Ex. 1007, 11:30-32.

Rowan experimented how the "treating unit tension" affected physical properties of the treated cord. Ex. 1007, 11:29-32. Rowan notes that a "4 N[ewton] tension level" is "very practical for a one machine unit OCT design." *Id.*, 12:13-15; Ex. 1003, ¶146.

A POSITA would understand a Newton is a unit measurement for force. By

contrast, "g/d" refers to "grams-force per denier," with a "denier" being a unit measurement for linear density. One denier is a gram of mass per 9,000 meters of fiber. In order to convert a value measured in Newtons into g/d, a POSITA would understand that this merely requires converting Newtons into grams-force and then dividing it by the denier of the cord being treated. Ex. 1003, ¶¶147-48.

A "gram-force" is simply the force of Earth's gravity on an object with a mass of one gram. The force of Earth's gravity on an object with one kilogram of mass is 9.8 Newtons (corresponding to Earth's gravitational force of 9.8 m/s^2). Thus, a POSITA would understand that one Newton of force equals 101.97 grams-force. Ex. 1003, ¶149. Accordingly, Rowan's "4 Newtons" of applied tension is about 408 grams-force. *Id.*

Tamura describes several embodiments of hybrid tire cords with a linear density of 3,070 dt (*i.e.* decitex, grams per 10,000 meters). Ex. 1006, ¶36, Table 1. 3,070 decitex is 2,763 denier. Ex. 1003, ¶150.

Thus, 4 Newtons of tension force (408 grams-force) applied to a tire cord with linear density of 2,763 denier results in 0.15 grams-force per denier (g/d), which is ***less than 0.4 g/d***. Ex. 1003, ¶151.

A POSITA would have found it obvious to apply Rowan's teaching of 4 Newtons of force as a desirable amount of tension to apply to a dip cord during the treatment process, including Tamura's tire cord. Ex. 1003, ¶152. As explained in

the above Motivation to Combine section, a POSITA would have found it desirable to apply the same treatment process described in Rowan to the tire cord disclosed by Tamura, and thus there would be a motivation to combine and a reasonable expectation of success. *Id.*

IX. GROUND 2: FRITSCH ALONE RENDERS OBVIOUS CLAIMS 1-2

Alternatively, Fritsch alone renders obvious claims 1-2, as along with disclosing modifying tension so that an aramid yarn is 0.5% to 2.5% longer than a nylon yarn, it also discloses a direct cabling machine for simultaneously and continuously twisting the yarns. Ex. 1003, ¶153.

A. Claim 1

1. 1[pre]: A method of manufacturing a hybrid tire cord comprising:

Fritsch discloses that it "relates to a composite of a plurality of yarns having different properties ***cabled together to form a hybrid cabled cord***." Ex. 1011, ¶2. Fritsch further discloses that the "hybrid cabled cord may be used in ***tire cord***." *Id.*, Abstract.

As discussed above, the '663 patent specification describes a "tire cord" as including either a raw cord or a dip cord. Ex. 1001, 5:20-23. Fritsch's hybrid cord is a ***raw cord*** because, as discussed below, it is formed by twisting two yarns and is therefore untreated at the time it is formed. Ex. 1003, ¶¶154-56.

2. 1[a]: a first step of primarily twisting an aramid filament yarn in a first direction to form an aramid primarily twisted yarn;

Fritsch teaches a "direct cabler" that first performs the step of "the [two] yarns are first twisted individually (for example in the Z direction)," *i.e.* ***twisting in a first direction***. Ex. 1011, ¶23. A POSITA would understand that the "direct cabler" performs this first step because it is fed two yarns where "both yarns are flat." *Id.*; Ex. 1003, ¶¶157-58. A "flat" yarn is a yarn that has not yet been "subjected to a twisting process." Ex. 1011, ¶17.

Fritsch further discloses that the first yarn can be "***aramid***." *Id.*, ¶29. In particular, Fritsch claims a "hybrid cabled cord" where one of the two yarns "comprises aramid." *Id.*, cls. 8-9. Since the aramid yarn is fed into the direct cabler as a "flat" yarn, it is an ***aramid filament yarn***. *Id.*, ¶23. The flat aramid yarn is then twisted to form ***an aramid primarily twisted yarn*** because it is an aramid filament yarn twisted in one direction. Ex. 1003, ¶159.

3. 1[b]: a second step of primarily twisting a nylon filament yarn in a second direction to form a nylon primarily twisted yarn, the second step and the first step being conducted simultaneously; and

"a second step of primarily twisting a nylon filament yarn in a second direction to form a nylon primarily twisted yarn": Fritsch teaches a "direct cabler" that first performs the step of "the [two] yarns are first twisted individually (for example in the Z direction)," *i.e.* ***twisting in a second direction***. Ex. 1011, ¶23. A

POSITA would understand that the "direct cabler" performs this first step because it is fed two yarns where "both yarns are flat." *Id.* A "flat" yarn is a yarn that has not yet been "subjected to a twisting process." *Id.*, ¶17; Ex. 1003, ¶¶160-61.

Fritsch further discloses that the first yarn can be "***nylon-6***" or "***nylon-6,6***." *Id.*, ¶29. In particular, Fritsch claims a "hybrid cabled cord" where one of the two yarns "comprises nylon-6" or "nylon-6,6." *Id.*, cls. 8-9. Since the nylon yarn is fed into the direct cabler as a "flat" yarn, it is a ***nylon filament yarn***. *Id.*, ¶23. The flat nylon yarn is then twisted to form ***a nylon primarily twisted yarn*** because it is a nylon filament yarn twisted in one direction. Ex. 1003, ¶¶162-63.

"the second step and the first step being conducted simultaneously": Fritsch discloses that the first and second twisting steps are performed by a "direct cabler," which performs all twisting in "one step," where "the direct cabler is fed with two [flat] yarns, and directly cables them to form cabled cord." Ex. 1011, ¶23. This "one step" includes "the [two flat] yarns are first twisted individually (for example in the Z direction)," which a POSITA would understand to mean ***simultaneously***. Ex. 1003, ¶164.

A POSITA would further understand and consider it obvious that Fritsch's "direct cabler" performs the first and second twisting steps simultaneously because of a POSITA's understanding of "direct cabler" machines. Ex. 1003, ¶165. In particular, Fritsch describes that "a typical direct cabler machine" is "manufactured

by ICBT." *Id.*, ¶24. A POSITA would have known that an ICBT direct cabler performs the initial twisting of the two yarns simultaneously. Ex. 1003, ¶165. For example, Rowan discloses the use of an "ICBT direct cable machine" (Ex. 1007, 10:22) and as discussed above in Ground 1, limitation 1[b], Rowan teaches that its direct cable machine ***simultaneously*** twists each respective individual yarn into "a twisted single yarn." Ex. 1007, 4:5-14.

4. 1[c]: a third step of secondarily twisting the aramid primarily twisted yarn and the nylon primarily twisted yarn in a third direction to form a plied yarn, the third step being conducted continuously with the first and second steps,

"a third step of secondarily twisting the aramid primarily twisted yarn and the nylon primarily twisted yarn in a third direction to form a plied yarn": Fritsch teaches that after twisting the ***aramid and nylon yarns*** "individually (for example in the Z direction)" to form ***aramid and nylon primarily twisted yarns***, the "twisted yarns are twisted together (for example in the S direction) [*i.e.* ***a third direction***] to form cabled cord" by the "direct cabler." Ex. 1011, ¶23. This results in a ***plied yarn***. Ex. 1003, ¶¶166-67.

As discussed above, the '663 patent describes a "plied yarn" as "a yarn made by twisting two or more primarily twisted yarns together in one direction," which meets the description in Fritsch. Ex. 1003, ¶167.

"the third step being conducted continuously with the first and second steps": Fritsch discloses that a direct cabler "complete[s] the production of cabled

cord in one step," including the steps of "first twist[ing] individually" each yarn and then "twist[ing] together" the two yarns "to form cabled cord." Ex. 1011, ¶23. Fritsch further explains that this is an "advantage[]" of the "direct cabler," where it is "fed with two [flat] yarns, and directly cables them to form cabled cord." *Id.* Thus, a POSITA would understand that the ***third twisting step is conducted continuously with the first and second steps***. Ex. 1003, ¶168.

A POSITA would further understand and consider it obvious that Fritsch's "direct cabler" performs the first and second twisting steps continuously with the third twisting step because of a POSITA's understanding of "direct cabler" machines. Ex. 1003, ¶169. In particular, Fritsch describes that "a typical direct cabler machine" is "manufactured by ICBT." *Id.*, ¶24. A POSITA would have known that an ICBT direct cabler performs the twisting of the two yarns together continuously with the twisting of the two yarns individually. Ex. 1003, ¶169. For example, Rowan discloses the use of an "ICBT direct cable machine" (Ex. 1007, 10:22) and as discussed above in Ground 1, limitation 1[b], Rowan teaches that its direct cable machine performs its twists as a "***continuous*** process." Ex. 1007, 7:61-64, 7:23-24.

5. 1[d]: wherein the first, second and third steps are conducted by one twister,

As discussed above, Fritsch teaches a single ICBT direct cabler, *i.e.* ***one twister***, that performs all three steps. Ex. 1003, ¶170.

6. 1[e]: the second direction is the same as the first direction,

As discussed above for limitations 1[a] and 1[b], Fritsch teaches that the aramid yarn (twisted in a ***first direction***) and the nylon yarn (twisted in a ***second direction***) are "twisted … in the Z direction," *i.e.* the ***same direction***. Ex. 1011, ¶23; Ex. 1003, ¶¶171-72.

7. 1[f]: tension applied to the nylon filament yarn in the second step is higher than tension applied to the aramid filament yarn in the first step in such an amount that, if the secondary twist of the hybrid tire cord with a predetermined length were untwisted, the aramid primarily twisted yarn would be 1.005 to 1.025 times longer than the nylon primarily twisted yarn.

"tension applied to the nylon filament yarn in the second step is higher than tension applied to the aramid filament yarn in the first step": Fritsch discloses creating a cord with an "unbalanced configuration" by altering the tension applied to the yarns where one of the cord's yarns is longer than the cord's other yarn. Ex. 1003, ¶¶173-75.

Specifically, Fritsch is directed to creating a "cabled cord" by twisting two yarns, each of which is "a plurality of continuous fibers." Ex. 1011, ¶¶14, 16. Fritsch also teaches that the cord can be a "hybrid cabled cord" where the two yarns have "different properties," because they are, for example, made from different materials. *Id.*, ¶15.

The novelty of Fritsch is that it introduces a method for creating a cord with

an "unbalanced configuration" which "means that at least two yarns [of the cord] have different lengths." *Id.*, ¶19. Fritsch teaches that an "unbalanced configuration" can be achieved by adjusting the tension controls of the twister that applies tension as the fibers are twisted into yarns. *Id.*, ¶¶24-25. In prior art methods, the tension on the yarns was "balanced," which "effectively means that the two yarns are pulled off with the same rate and thus equal lengths are incorporated into the cabled cord." *Id.*, ¶24. The inventors of Fritsch, however, noted that by changing the "tension on the individual plies," an unbalanced configuration can be achieved. *Id.*, ¶25. In particular, the tension on the yarns can be made unbalanced by "wrapping the two yarns around the butterfly pulley an unequal number of times." *Id.* The "yarn with more wraps," *i.e.* ***has higher tension applied***, will have "increased friction and thus reduced slippage so it is pulled less than the other yarn, and will have ***a lesser length*** in the resulting cabled cord." *Id.*, ¶25; Ex. 1003, ¶176.

Fritsch further teaches that the yarn with "higher modulus" will have a longer length than the yarn with "lower modulus," and therefore will have less tension applied during twisting. *Id.*, ¶¶20, 25. "Modulus" refers to a material's ability to resist being deformed. Ex. 1003, ¶177. A POSITA would understand that aramid yarn has a higher modulus than nylon yarn. *Id*. Other references confirm this, such as Tamura, which states that "aramid fibers … are superior in … elastic modulus," whereas "nylon fibers reduces the overall modulus of the composite fiber." Ex.

1006, ¶¶15, 6.

"if the secondary twist of the hybrid tire cord with a predetermined length were untwisted, the aramid primarily twisted yarn would be 1.005 to 1.025 times longer than the nylon primarily twisted yarn": Fritsch teaches that the ratio of the lengths of the yarns is measured using a value called "coring level," which Fritsch discloses can be ***1.005 to 1.025 times longer***. Ex. 1011, ¶19. The "coring level" is measured by "taking a sample of one meter of cabled cord [*i.e.* ***hybrid tire core with a predetermined length***] and ***untwisting*** the cable in order to separate the two yarns which compose it," following which the two yarns "are then ***untwisted*** by the same number of turns as it took to separate the cable, and in the opposite direction, to yield the two yarns in their as-fed state," *i.e.* ***the hybrid tire cord is untwisted***. Ex. 1011, ¶19. The "coring level" is calculated as $Coring = (A - B)/B$ "wherein A is the length of the yarn having the higher modulus," *i.e.* ***the aramid primarily twisted yarn***, and "B is the length of the yarn having the lower modulus," *i.e.* ***the nylon primarily twisted yarn***. *Id.*; Ex. 1003, ¶178.

When the higher modulus yarn is ***1.005 to 1.025 times longer*** than the lower modulus yarn, the Coring level is 0.005 to 0.025, or ***0.5% to 2.5%***. Ex. 1003, ¶179.

Fritsch teaches Coring levels of 0.5% to 2.5%. Ex. 1003, ¶180. Fritsch mentions that a "[p]referred" Coring level is a "non-zero" value "no greater than about 25% and no less than about -25%," which includes the claimed range. Ex.

1011, ¶29.

For example, in Table 1, one of the "inventive cords" that was tested had a Coring level of 0.9%. Ex. 1011, ¶40. Notably, this cord had a relatively high Breaking Strength of 184 (second highest among the tested cords) and a relatively high Elongation at Break percentage of 12.8%. *Id.* Fritsch notes that it is desirable to balance the two values. *Id.*, ¶41. The desirable breaking strength of this inventive cord is depicted in the below annotated Figure 2, which is a graph of the Coring level of the tested inventive cords against their Breaking Strength. Ex. 1003, ¶181.

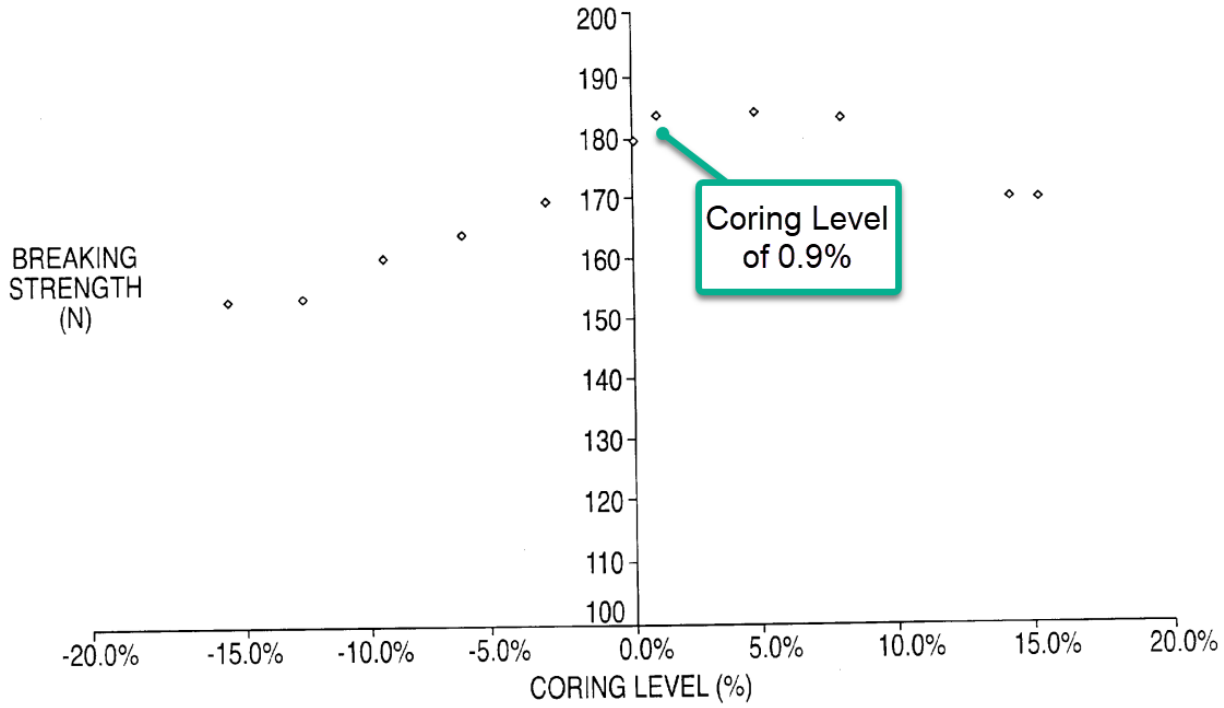

FIG. 2

To the extent Patent Owner argues that Fritsch does not expressly disclose an aramid-nylon tire cord with a Coring level of 0.9%, a POSITA would have considered it obvious to apply Fritsch's teaching of a 0.9% Coring level to the nylon-

aramid hybrid cord taught by Fritsch. Ex. 1003, ¶182. As discussed in Ground 1 and above, Fritsch discloses numerous benefits of having a positive Coring level, including a Coring level of 0.9%. *See* Section VIII.A.3. For example, a Coring level of 0.9% had a good balance of high Breaking Strength of 184 (second highest among the tested cords) and a relatively high Elongation at Break percentage of 12.8%. Ex. 1011, ¶40. For all the reasons mentioned there, a POSITA would similarly be motivated to apply this teaching to another embodiment in Fritsch. Ex. 1003, ¶182. A POSITA would also have a reasonable expectation of success in combining these teachings from the same reference. Ex. 1003, ¶183. Fritsch teaches that the Coring level of 0.9% is achievable by altering the tension of the ICBT direct cabling device, which is also used for the aramid-nylon embodiment. *Id.* Thus, a POSITA would have expected the combination to yield the predictable result of improving the physical properties of Fritsch's aramid-nylon tire cord. *Id.*

B. Claim 2

1. 2[pre]/2[a]: The method according to claim 1, further comprising: dipping the plied yarn in an adhesive agent solution;

Fritsch teaches that its "inventive hybrid cabled cords" are "treated to a dip/dry/stretch/dip/relax process." Ex. 1011, ¶45. Fritsch in particular discloses that the "[s]econd ***dip***" involves dipping the tire cord, *i.e.* ***plied yarn***, into "Resorcinol Formaldehyde Latex type," which is an ***adhesive agent solution***. Ex. 1003, ¶¶184-

85. This is the same adhesive agent solution described in the '663 patent. Ex. 1001, 8:33-35 ("A resorcinol formaldehyde Latex (RFL) solution … can be used as the adhesive agent solution.").

To the extent Patent Owner argues that Fritsch does not expressly disclose treating a nylon-aramid hybrid cord, a POSITA would have considered it obvious to apply Fritsch's treatment process to the nylon-aramid hybrid cord taught by Fritsch. Ex. 1003, ¶186. A POSITA would understand that treatment of raw cords is beneficial for incorporating cords into tires. Indeed, Fritsch teaches that "[t]reated cord samples" are used for "simulating tire curing and embedded in rubber blocks … to simulate the alternative stretch and compression that a cord would undergo in the turn up area of a monopoly passenger tire." Ex. 1011, ¶37. Fritsch also teaches that the treating process is "commonly used in the manufacture of fiber-reinforced tires." *Id.*, ¶58.

Furthermore, Fritsch teaches that treatment can actually cause an increase in the "[b]reaking strength" of the cord, such as shown in Table 3 where the cords with a positive coring level showed an increase in breaking strength. A POSITA would therefore be motivated to apply Fritsch's treatment process to other tire cord embodiments described in Fritsch. Ex. 1003, ¶¶187-88.

TABLE 3

Inv. Ex.	Comp. Ex.	Cord constituent yarns	Greige cord Coring level	Greige cord Breaking strength (N)	Treated cord Coring level	Treated cord Breaking strength (N)
	A	PEN/PEN	0	199.2	0	192.5
11		PEN/PET	−13.3%	149.9	−9.7%	140.3
12		PEN/PET	−5.8%	163.15	−4.5%	162.0
	B	PEN/PET	0	180.5	1.5%	176.6
13		PEN/PET	3.3%	182.0	3.8%	182.6
14		PEN/PET	12.4%	172.8	10.8%	179.0
	C	PET/PET	0	177.7	0	182.5

A POSITA would have had a reasonable expectation of success in applying Fritsch's treatment process to its nylon-aramid tire cord embodiment. Ex. 1003, ¶189. Fritsch provides detailed instructions for its treatment process, and given that treatment of tire cords was "conventional," it would be well-within the skill of an ordinary artisan to treat nylon-aramid tire cords using the same process described in Fritsch. *Id.*

2. 2[b]: drying the adhesive agent solution-impregnated plied yarn; and

Fritsch teaches that in the next step of the treatment process following the dipping of the cord into RSL, an oven is used for "***drying*** for 45 seconds at 140°C under 24N. Ex. 1011, ¶50; Ex. 1003, ¶¶190-91.

3. 2[c]: thermally treating the dried plied yarn.

Fritsch teaches that following the drying step, the cord is placed in a different "oven" for "relaxation for 45 seconds at 238°C under 12N." Ex. 1011, ¶51. Fritsch

teaches that following this "relaxation" step, the cord has been "***treated***." *Id.*, ¶45. A POSITA would therefore understand that placing the dipped and dried cord into an oven at a high temperature of 238° C will ***thermally treat*** the cord. Ex. 1003, ¶¶192-93. This is consistent with, for example, Rowan's disclosure that placing a dipped cord into an oven of "approximately 200° C. for a residence time of approximately 30 seconds or less" will "***cure the bonding agent***," *i.e.* ***thermally treat the dried cord***. Ex. 1007, 9:21-25.

X. 35 U.S.C. § 325(D) SUPPORTS INSTITUTION

The same or substantially the same prior art or arguments were ***not*** previously were presented to the Office. None of the references relied on were considered or cited.

XI. *FINTIV* SUPPORTS INSTITUTION

The Board balances six factors in considering discretionary denial under 35 U.S.C. § 314(a) when parallel litigation exists. *Apple Inc. v. Fintiv, Inc.*, IPR2020-00019, Paper 11 (PTAB Mar. 20, 2020) (precedential). Here, the factors ("*Fintiv* factors") favor institution.

Factor 1—potential stay of the district court litigation—is neutral because no party has requested a stay. *VMWare, Inc. v. Intellectual Ventures I LLC*, IPR2020-00470, Paper 13 (PTAB Aug. 18, 2020), at 17 (finding in the absence of a stay motion that this factor "does not weigh for or against discretionary denial").

Factor 2—district court trial date and the Board's statutory deadline—should be considered neutral. The earliest estimated trial date for the district court litigation is far in the future as jury selection is not set to begin until at least February 3, 2026, which is 6 months before the estimated date for the Board's Final Written Decision. Because much will change in one year, the current trial date does not support denial. *See Dish Network v. Broadband iTV*, IPR2020-01280, Paper 17 at 16 (PTAB Feb. 4, 2021) ("We cannot ignore the fact that the currently scheduled trial date is more than nine months away and much can change during this time"). In addition, even if the Board is inclined to weigh this factor in favor of institution, the Board has frequently found that other factors outweigh this factor, especially for a short difference of 5 months. *T-Mobile USA, Inc. et al. v. Cobblestone Wireless LLC*, IPR2024-00137, Paper 15 (PTAB May 15, 2024) (finding an eight month difference weighs in favor of denial, but that it was outweighed by the compelling merits of the petition).

Factor 3—investment in the district court proceedings—weighs heavily against discretionary denial. The associated district court case is still in the very early stages of litigation: discovery is still in the early stages, the Defendants served their invalidity contentions on December 13, 2024, and Claim Construction hearing is not scheduled until May 12, 2025. Moreover, a claim construction order likely will not issue prior to the PTAB's projected institution decision date. Accordingly, the

district court will not invest significant resources or issue substantive orders related to the challenged patent prior to the issuance of an institution decision. *See Fintiv*, IPR2020-00019, Paper 11, at 9-12. Regardless, Petitioner diligently prepared and filed this Petition well before the statutory deadline, which weighs against denying institution.

Factor 4—overlap in the parallel proceedings—is neutral as all the challenged claims are also asserted in the district court litigation.

Factor 5—overlapping parties—is neutral as it is "far from an unusual circumstance that a petitioner in *inter partes* review and a defendant in a parallel district court proceeding are the same." *Sand*, IPR2019-01393, Paper 24, at 12-13.

Factor 6—other considerations—weighs against discretionary denial. As explained, the merits of the Petition are strong, and the Challenged Claims are invalid. For example, none of the grounds asserted herein were previously considered by either the Office or the district courts. *Cf. Comcast Cable Commn's, LLC v. Rovi Guides, Inc.*, IPR2019-00231, Paper 14 at 11 (PTAB May 20, 2019) (obviousness challenges not "previously considered by the Office or any court" weigh in favor of not denying institution). Moreover, the '663 patent is currently asserted in a district court case. Institution of this IPR provides the opportunity for narrowing and simplifying the litigations for the district court.

Compelling Merits—discretionary denial is also not warranted because this petition presents compelling evidence of unpatentability. As discussed above, the '663 patent concedes that nylon-aramid hybrid reinforcement cords were widespread and well-known in the art. *See supra* § I. The patent purports only to have the aramid yarn be slightly longer than the nylon yarn, and that the twisting is done using a single twister simultaneously and continuously. But these were clearly taught and invalidated by the prior art discussed above.

Accordingly, the Board should decline to exercise its discretion under *Fintiv* and institute trial.

XII. MANDATORY NOTICES

A. Real Party-in-Interest

The real parties-in-interest for Petitioner is HS Hyosung Advanced Materials Corp. and Hyosung USA, Inc.

B. Related Matters

Kolon Industries, Inc. v. Hyosung Advanced Materials Corp. and Hyosung USA, Inc., No. 8:24-cv-00415 (C.D. Cal.).

C. Counsel and Service Information

Electronic service may be made on the email addresses of counsel identified below and in the accompanying Power of Attorney.

Lead Counsel	**Backup Counsel**
James M. Glass (Reg. No. 46729) jimglass@quinnemanuel.com QUINN EMANUEL URQUHART & SULLIVAN, LLP 51 Madison Avenue, 22nd Floor New York, NY 10010 Tel: (212) 849-7000	Quincy Lu (Reg. No 76954) quincylu@quinnemanuel.com QUINN EMANUEL URQUHART & SULLIVAN, LLP 1109 First Avenue, Suite 210 Seattle, WA 98101 Tel: (206) 905-7000 Fax: (206) 905-7100

D. Payment of Fees

The Office is authorized to charge the fee required for this Petition (and any additional fees) to Deposit Account No. 50-5708.

XIII. CONCLUSION

For the reasons above, *inter partes* review is requested.

Date: February 27, 2025

Respectfully submitted,

By: /s/ *James M. Glass*
James M. Glass

Counsel for Petitioner

CERTIFICATION UNDER 37 C.F.R. § 42.24

Under the provisions of 37 C.F.R. § 42.24, the undersigned hereby certifies that the word count for the foregoing Petition for *inter partes* review (excluding the table of contents, table of authorities, mandatory notices, certificate of service or word count, and appendix of exhibits or claim listing) totals 12,867 words, which is within the word limit allowed under 37 C.F.R. § 42.24(a)(i).

Date: February 27, 2025

/s/ James Glass
James Glass (Reg. No. 46729)

CERTIFICATE OF SERVICE

Pursuant to 37 C.F.R. §§ 42.6(e), 42.105(a), the undersigned hereby certifies service on the PO of a copy of this Petition and its respective exhibits at the official correspondence address for the attorneys of record for the ’663 patent as shown in USPTO PAIR via FedEx:

SUGHRUE MION, PLLC
2000 PENNSYLVANIA AVENUE, N.W.
SUITE 9000
WASHINGTON, DC 20006
UNITED STATES

Courtesy copies were also sent via electronic mail to the parties' counsel of record in the related district court proceeding, including Patent Owner’s:

Doug.Lumish@lw.com
Charles.Sanders@lw.com
Joe.Akalski@lw.com
kolonhyosung.lwteam@lw.com
Marla.Butler@thompsonhine.com
Jonathan.Nussbaum@thompsonhine.com
Ash.Patel@thompsonhine.com
Josepher.li@armondwilson.com
hyosung-litigation@armondwilson.com
sxlee@sughrue.com

Date: February 27, 2025

/s/ James Glass
James Glass (Reg. No. 46729)