IN THE UNITED STATES PATENT AND TRADEMARK OFFICE

_____

BEFORE THE PATENT TRIAL AND APPEAL BOARD

_____

HS HYOSUNG ADVANCED MATERIALS CORP.,

Petitioner,

v.

KOLON INDUSTRIES, INC.,

Patent Owner.

_____

Case No. IPR2025-00664

U.S. Patent No. 9,617,663

_____

DECLARATION OF JON RUST, PH.D. IN SUPPORT OF PETITION FOR INTER PARTES REVIEW OF UNITED STATES PATENT NO. 9,617,663

TABLE OF CONTENTS

I. INTRODUCTION 1

II. BACKGROUND AND QUALIFICATIONS 2

III. LEGAL STANDARDS 6

A. Obviousness 6

B. Claim Construction 11

IV. PERSON OF ORDINARY SKILL IN THE ART AND THE TIME OF THE ALLEGED INVENTION 12

V. THE '663 PATENT 13

A. Background of the Technology 13

B. Description of the '663 Patent's Specification 17

C. The '663 Patent's Prosecution History 18

D. Claim Construction 19

1. "primarily twisted yarn" 20

2. "plied yarn" 20

3. "tire cord" 21

VI. OVERVIEW OF THE PRIOR ART 21

A. Tamura (Ex. 1006) 21

B. Rowan (Ex. 1007) 22

C. Buchanan (Ex. 1010) 24

D. Fritsch (Ex. 1011) 26

VII. GROUNDS OF REJECTION 28

A. Ground 1: Tamura in View of Fritsch, Rowan and Optionally Buchanan Renders Obvious Claims 1-3 28

1. Motivation to Combine 29

(i) Motivation to Combine Tamura with Rowan 29

(ii) Motivation to Optionally Combine Tamura and Rowan with Buchanan 33

(iii) Motivation to Optionally Combine Tamura with Fritsch 37

2. Claim 1 41

(i) 1[pre]: A method of manufacturing a hybrid tire cord comprising: 41

(ii) 1[a]: a first step of primarily twisting an aramid filament yarn in a first direction to form an aramid primarily twisted yarn; 42

(iii) 1[b]: a second step of primarily twisting a nylon filament yarn in a second direction to form a nylon primarily twisted yarn, the second step and the first step being conducted simultaneously; and 43

(iv) 1[c]: a third step of secondarily twisting the aramid primarily twisted yarn and the nylon primarily twisted yarn in a third direction to form a plied yarn, the third step being conducted continuously with the first and second steps, ... 50

(v) 1[d]: wherein the first, second and third steps are conducted by one twister, ... 53

(vi) 1[e]: the second direction is the same as the first direction, ... 53

(vii) 1[f]: tension applied to the nylon filament yarn in the second step is higher than tension applied to the aramid filament yarn in the first step in such an amount that, if the secondary twist of the hybrid tire cord with a predetermined length were untwisted, the aramid primarily twisted yarn would be 1.005 to 1.025 times longer than the nylon primarily twisted yarn. 54

3. Claim 2 58

(i) 2[pre]/2[a]: The method according to claim 1, further comprising: dipping the plied yarn in an adhesive agent solution; 58

(ii) 2[b]: drying the adhesive agent solution-impregnated plied yarn; and 59

(iii) 2[c]: thermally treating the dried plied yarn. 60

4. Claim 3 60

(i) 3[pre]: The method according to claim 2, wherein the dipping, drying and thermal treatment steps are continuously conducted, and 60

(ii) 3[a]: tension applied to the plied yarn in the dipping, drying and thermal treatment steps is 0.4 g/d or less per cord. 61

B. Ground 2: Fritsch Alone Renders Obvious Claims 1-2 64

1. Claim 1 64

(i) 1[pre]: A method of manufacturing a hybrid tire cord comprising: 64

(ii) 1[a]: a first step of primarily twisting an aramid filament yarn in a first direction to form an aramid primarily twisted yarn; 65

(iii) 1[b]: a second step of primarily twisting a nylon filament yarn in a second direction to form a nylon primarily twisted yarn, the second step and the first step being conducted simultaneously; and 65

(iv) 1[c]: a third step of secondarily twisting the aramid primarily twisted yarn and the nylon primarily twisted yarn in a third direction to form a plied yarn, the third step being conducted continuously with the first and second steps,..... 67

(v) 1[d]: wherein the first, second and third steps are conducted by one twister,..... 69

(vi) 1[e]: the second direction is the same as the first direction,..... 69

(vii) 1[f]: tension applied to the nylon filament yarn in the second step is higher than tension applied to the aramid filament yarn in the first step in such an amount that, if the secondary twist of the hybrid tire cord with a predetermined length were untwisted, the aramid primarily twisted yarn would be 1.005 to 1.025 times longer than the nylon primarily twisted yarn. 70

2. Claim 2 75

(i) 2[pre]/2[a]: The method according to claim 1, further comprising: dipping the plied yarn in an adhesive agent solution;..... 75

(ii) 2[b]: drying the adhesive agent solution-impregnated plied yarn; and..... 77

(iii) 2[c]: thermally treating the dried plied yarn. 77

VIII. CONCLUSION 78

I. INTRODUCTION

1. I have been retained by HS Hyosung Advanced Materials Corp. ("Petitioner") as an independent expert consultant in this proceeding before the United States Patent and Trademark Office ("PTO") against Kolon Industries, Inc. ("Patent Owner") regarding U.S. Patent No. 9,617,663 ("the '663 patent") (Ex. 1001).[1] I have been asked to submit this Declaration on behalf of Petitioner.

2. I have been asked to consider whether certain references disclose or render obvious the features recited in claims 1-3 (collectively, the "Challenged Claims") of the '663 patent. My opinions are set forth below. Based on my experience and expertise, it is my opinion that the prior art renders obvious all limitations of the Challenged Claims, as I discuss in detail below.

3. I am being compensated at a rate of $500 per hour for my work in this proceeding. My compensation is in no way contingent on the nature of my findings, the presentation of my findings in testimony, or the outcome of this or any other proceeding. I have no other interest in this proceeding.

4. All of my opinions stated in this Declaration are based on my own personal knowledge and professional judgment. I am over 18 years of age and, if I

[1] Where appropriate, I refer to exhibits that I understand are to be attached to the petition for *Inter Partes* Review of the '663 patent.

am called upon to do so, I would be competent to testify as to the matters set forth in this Declaration.

II. BACKGROUND AND QUALIFICATIONS

5. Below I provide a summary of my educational background, career history, publications, and other relevant qualifications.

6. I am a Professor Emeritus of Textile Engineering in the Textile Engineering, Chemistry and Science (TECS) Department in the Wilson College of Textiles at North Carolina State University.

7. I graduated from Clemson University with a B.S. in Mechanical Engineering in 1982 and an M.S. in Fiber Science in 1985. In 1990, I earned my Ph.D., with a focus on Fiber and Polymer Science, from North Carolina State University.

8. I have 37 years of experience in the field of textile engineering and development. Since 1985, I have held various positions with NC State University's Department of Textile Engineering, Chemistry and Science ("TECS"). Between 2008 and 2014, I was the Department Head. I have served as Associate Dean for Academics in the Wilson College of Textiles and Interim Associate Dean for General Education Program Implementation for NC State University. Presently, I am Professor Emeritus of Textile Engineering in the TECS Department, a title I have held since 2020.

9. Separately, I was the Interim Director of Zeis Textiles Extension Education for Economic Development ("ZTE") between 2014 and May of 2019. ZTE provides training and certification in textiles and Lean Six Sigma, and serves the textile industry's prototyping and pilot production needs in its laboratories – spun yarn, knitting, extrusion, weaving, physical testing, and chemical processing including dyeing and finishing.

10. Throughout my career, I have designed, manufactured, tested and/or provided expert testimony concerning many types traditional textile products and nontraditional as well. These have included patented hernia meshes, artificial turf, nasal swabs, warp knitted bale covers, dog-bite protection devices, non-lubricated slides using low friction filament yarns, rock-climbing ropes and a test method for testing castability of various filament fishing lines.

11. I have taught various courses at the undergraduate and graduate levels relating to textile engineering including, most recently, TMS 211, Introduction to Fiber Science; TT 327, Yarn Production and Properties; TE 201, Textile Engineering Science; TE 301, Engineering Textile Structures I: Linear Assemblies; TE 401 and 402 and Textile Engineering Design I and II.

12. I have received over $3 million in grant funds to conduct textile engineering research, with relevant projects including fabric development related to moisture management for use in performance apparel, textile material sustainability,

color control and uniformity and process improvement related to many different textile processes. Most of my funding was sponsored by industry and therefore proprietary and not published.

13. For 17 years, I led multidisciplinary teams of students from several universities working on process improvement projects in the textile industry, including in connection with Milliken and Company, Burlington Industries, UNIFI and others.

14. While at NC State University, I received recognition for my work in textile engineering, including through awards and honors such as the Gertrude Cox Award: for *Innovative Excellence in Teaching and Learning with Technology*; the Division of Undergraduate Academic Programs Award: for *Outstanding Contributions to Undergraduate Education*; the Chancellors Creating Community Award for Outstanding Faculty Committed to Diversity; the NC State Alumni Distinguished Undergraduate Professor; and Outstanding Teacher at NC State University.

15. Throughout my career, I have written or co-written 40 peer-reviewed journal articles, most of which focused on the subject of textile engineering. My substantial work in textile engineering also led to the issuance of the following U.S. Patents, of which I am a listed co-inventor: # **12,018,414:** "Warp Knit Fabric for Textile and Medical Applications and Methods for Manufacturing the Same", (w/

H. Levinson, JB Davis & D Ward), June 25, 2024; # **11,001,948:** "Warp Knit Fabric for Textile and Medical Applications and Methods for Manufacturing the Same", (w/ H. Levinson, JB Davis & B Ward), May 11, 2021; **# 10,602,791:** "Multi-layered Protective Covering and Uses Thereof", (w/ Jur, Gorga, et al), 2020; **# 8,261,415** ("An Apparatus for Cotton Ginning, Processes and Methods Associated Therewith"); **# 8,120,769** ("Method and System for Fiber Properties Measurement"); **# 6,882,423** ("Apparatus and Method for Precision Testing of Fiber Length Using Electrostatic Collection and Control of Fibers"); **# 5,774,942** ("Feedforward and Feedback Autoleveling System for Automated Textile Drafting System"); **# 5,796,220** ("Synchronous drive system for automated textile drafting system"); **# 5,774,943** ("Tongue and Groove Drafting Roller Autoleveling System for Automated Textile Drafting System"); **# 5,761,772** ("Securing and Pressuring System for Drafting Rollers for Automated Textile Drafting System"); and **# 5,774,940** ("Draftless Sliver Coiler Packaging System for Automated Textile Drafting System"). I am also listed as a co-inventor on Chinese Patent No. **ZL200680044482.4** ("An Apparatus for Cotton Ginning, Processes and Methods Associated Therewith").

16. Accordingly, I am an expert in the field of textile engineering, and I was an expert in this field prior to June 29, 2015. As a result of my experience and frequent interaction with skilled artisans, I am familiar with the knowledge and

understanding of a person of ordinary skill. In formulating my opinions set forth herein, I have relied upon my training, knowledge, and experience in the relevant art.

17. A complete statement of my industrial and academic and employment records including a listing of the above publications and patents is included with my curriculum vitae in Exhibit 1004.

18. Based on my professional experience, I believe I am qualified to testify as an expert on matters related to the patent at issue.

III. LEGAL STANDARDS

19. Petitioner's attorneys have explained to me the legal standards that apply in this case. My understanding of those standards is described below. I am not an attorney, and I do not have formal training in the law regarding patents. I have used my understanding of the following legal principles set forth in this section in reaching my opinions.

20. I understand that, in this proceeding, Petitioner has the burden of proving that the challenged claims are invalid by a preponderance of the evidence.

A. Obviousness

21. I have been informed that a claim is invalid as obvious under 35 U.S.C. § 103 (pre-AIA) if the differences between the claimed subject matter and the prior art are such that the subject matter as a whole would have been obvious at the time

of the invention to a person of ordinary skill in the art. I have been informed that the following matters are relevant to determining whether the claimed invention would have been obvious: (1) the scope and content of the prior art, (2) the difference or differences between the patent claim and the prior art, (3) the level of ordinary skill in the art at the time the invention of the patent, and (4) any secondary considerations or objective indicia of non-obviousness.

22. I have been informed that the combination of familiar elements according to known methods is likely to be obvious when it does no more than yield predictable results. When a claim simply arranges prior art elements with each performing the same function it had been known to perform and yields no more than one would expect from such an arrangement, then such a combination is obvious. When a patent claims a structure already known in the prior art altered by the mere substitution of one element for another known in the field, the combination is likely to be obvious unless the combination yields an unpredictable result.

23. I have been informed that when a work is available in one field of endeavor, design incentives and other market forces can prompt variations of it, either in the same field or a different one. If a person of ordinary skill in the art can implement a predictable variation, such a variation is likely unpatentable. For the same reason, if a technique has been used to improve one device, and one of ordinary skill in the art would recognize that it would improve similar devices in the same

way, using the technique is obvious unless its actual application is beyond his or her skill. One question to consider is whether the improvement is more than predictable using prior art elements according to their established functions.

24. I have been informed that it may often be necessary, in a validity analysis, to consider whether there was an apparent reason to combine the known elements in the fashion claimed by the patent at issue. This can be accomplished by looking to interrelated teachings of multiple patents or other publications or pieces of prior art; the effects of demands known to the design community or present in the marketplace; and the background knowledge possessed by one of ordinary skill in the art.

25. I have been informed that a validity analysis need not seek out precise teachings directed to the specific subject matter of the challenged claim; it is appropriate to take account of the inferences and creative steps that a person of ordinary skill in the art would employ. I have been informed that a person of ordinary skill in the art is a person of ordinary creativity, not an automaton.

26. I have been informed that a claim composed of several elements is not proved obvious merely by demonstrating that each element was, independently, known in the prior art. I have been informed that it can be important to identify a reason that would have prompted a person of ordinary skill in the art in the relevant field to combine the elements in the way the claimed new invention does. I am told

that one way that subject matter can be proved obvious is by noting there existed at the time of the invention a known problem for which there was an obvious solution encompassed by the patent's claims. I have been informed that any need or problem known in the field of endeavor at the time of the claimed invention and addressed by the patent can provide a reason for combining the elements in the manner claimed.

27. I have been informed that one should not assume that a person of ordinary skill in the art attempting to solve a problem will be led only to those elements of prior art designed to solve the same problem. Instead, I have been informed that since familiar items may have obvious uses beyond their primary purposes, in many cases a person of ordinary skill in the art will be able to fit the teachings of multiple prior art references together like pieces of a puzzle.

28. I have been informed that, when there is a design need or market pressure to solve a problem and there are a finite number of identified, predictable solutions, persons of ordinary skill in the art have good reason to pursue the known options within their technical grasp. If this leads to the anticipated success, the product was likely not accomplished by innovation but by using ordinary skill and common sense. I have been informed that, in such an instance, the fact that the combination was obvious to try may show that the combination was obvious.

29. I have been informed that, when determining whether a claimed combination would have been obvious, the correct analysis is not whether a person

of ordinary skill in the art, writing on a blank slate, would have chosen the particular combination of elements described in the claim. Instead, I have been informed that the correct analysis considers whether one of ordinary skill, facing the wide range of needs created by developments in the field of endeavor, would have seen a benefit to selecting the combination claimed.

30. I have been informed that, when determining whether a claimed invention is obvious, any "secondary considerations" of non-obviousness identified by the patentee should also be considered. These secondary considerations can include:

- commercial success of the invention, causally related to the invention itself rather than to companion factors, such as advertising or attractive packaging;
- the invention taught away from the technical direction followed by those skilled in the art;
- a long-felt but unsatisfied need for the invention while the needed implementing arts and elements had long been available;
- the invention achieves results unexpected to those skilled in the art;

- copying of the invention by competitors as distinguished from their independent development
- unsuccessful attempts by those skilled in the art to make the invention;
- acquiescence by the industry to the patent's validity by honoring the patent through taking licenses or not infringing the patent, or both; and
- skepticism, disbelief in or incredulity by those skilled in the art that the patentee's approach worked.

31. I have been informed that, for the above information to impact the obviousness of a patent claim, there must be a nexus between the alleged secondary considerations and the claims. In addition, I have been informed that the burden of introducing evidence of secondary considerations generally is on the Patent Owner. If the Patent Owner or its expert should assert secondary considerations of non-obviousness, I reserve the right to provide a Declaration addressing assertions of non-obviousness due to secondary considerations.

B. Claim Construction

32. I have been informed that claim terms are typically given their plain and ordinary meanings, as would have been understood by a person of ordinary skill

in the art at the time of the earliest alleged priority date. I have further been informed that when considering the meaning of any terms in the Challenged Claims of the ’663 patent, I should apply the plain and ordinary meaning of those terms. I have further been informed that in considering the meaning of the claims, one must consider the language of the claims, the specification, and the prosecution history of record.

33. I have been informed that in general, a preamble limits the invention if it recites essential structure or steps, or if it is necessary to give life, meaning, and vitality to the claim. I have further been informed that a preamble is not limiting where a patentee defines a structurally complete invention in the claim body and uses the preamble only to state a purpose or intended use for the invention. I have further been informed that dependence on a particular disputed preamble phrase for antecedent basis may limit claim scope because it indicates a reliance on both the preamble and claim body to define the claimed invention. I have further been informed that clear reliance on the preamble during prosecution to distinguish the claimed invention from the prior art transforms the preamble into a claim limitation because such reliance indicates use of the preamble to define, in part, the claimed invention.

IV. PERSON OF ORDINARY SKILL IN THE ART AND THE TIME OF THE ALLEGED INVENTION

34. I have been asked to assume that the ’663 patent is entitled to its earliest alleged priority date of June 29, 2015. *See* Ex. 1001. Beyond this assumption, I have

not undertaken an analysis to determine the earliest priority date to which the ’663 patent is entitled.

35. Based on the materials and information I have reviewed and based on my experience in the technical areas relevant to the ’663 patent, a person of ordinary skill in the art at the time of the alleged invention of the ’663 patent would have had at least a Bachelor of Science degree in materials science and engineering, textile engineering, chemistry, or an equivalent field, and at least two years of experience with tire reinforcement cord design and manufacture, and/or fiber or polymer science and processing. More education can supplement practical experience and vice versa. Based on my knowledge and experience, including as discussed above in Section II, I exceeded the level of skill of a person of ordinary skill in the art at the time of the alleged invention of the ’663 patent and can provide opinions regarding the knowledge of a person of ordinary skill in the art as of that time. My opinions herein are, where appropriate, based on my understandings as to a person of ordinary skill in the art at that time. I myself had more than these capabilities at the time of the alleged invention of the ’663 patent.

V. THE ’663 PATENT

A. Background of the Technology

36. The ’663 patent is directed to manufacturing a hybrid tire cord by twisting together an aramid twisted yarn and a nylon twisted yarn. Below, I provide

some background information helpful for understanding the role of tire cords within a tire.

37. One of the most important parts of a tire is its reinforcement. It provides strength and stability to the tire, like bones in a human body. Tire reinforcements can be made of various materials, including textiles. Originally, textile reinforcements were made of cotton, which was slowly replaced by rayon. And at the time of the ’663 patent, nylon and aramid tire reinforcement materials were prevalent—particularly for use in the tire’s cap ply. The “use of tire cords made from high tenacity organic fibers such as rayon, nylon, aramid, and polyester in a construction of moderate twist has remained the principal reinforcing method.” Rowan at ¶5.

38. One important way to improve tire performance is to improve the physical properties of the tire cord used as a reinforcing material. Ex. 1009 (Kwon), ¶2. Previously, reinforcement cords were entirely nylon or entirely aramid. Aramid is a high-tenacity, high-modulus, low-elongation, and thermally-stable material. And nylon 6.6 is a high elongation, low-modulus, high-fatigue-resistant material. In the early 2000’s, Michelin developed a new textile reinforcement which combined the beneficial aspects of nylon and aramid and significantly improved high-performance tires—i.e., the nylon-aramid hybrid reinforcement cord. Hybrid cords

are a combination of two or more types of yarns plies twisted together (e.g., a nylon yarn and an aramid yarn).

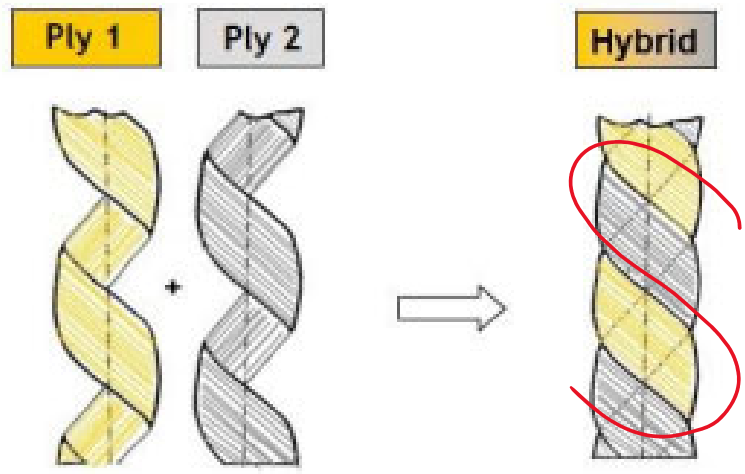

Wahl, G., Basics of Textile Reinforcement Materials for Tires (2006).

39. Each ply is twisted on its own axis and then with another ply before it is formed into a cord. The ply twisting directions are denoted by "z" and "s". If the direction of twist is from right to left, it is called "z" twist, and if the direction of twist is from left to right, it is called "s" twist. In some instances, each individual ply is twisted in the "z" direction and then the two individually-twisted plies are twisted together in "s" direction to form a cord. Twisting causes the cord to lose tensile strength, but it simultaneously gains flex fatigue resistance. Hence the number of times a ply is twisted must strike a balance between tensile strength and flex fatigue resistance.

40. Further, because textile fabric adheres poorly to rubber, the textile reinforcements have long been treated with adhesive solutions, commonly

Resourcinol-Formaldehyde-Latex or other epoxies, which acts as a bonding agent between the textile reinforcement cord and the rubber tire. The illustration below shows how reinforcement cords adhere to a rubber cap ply.

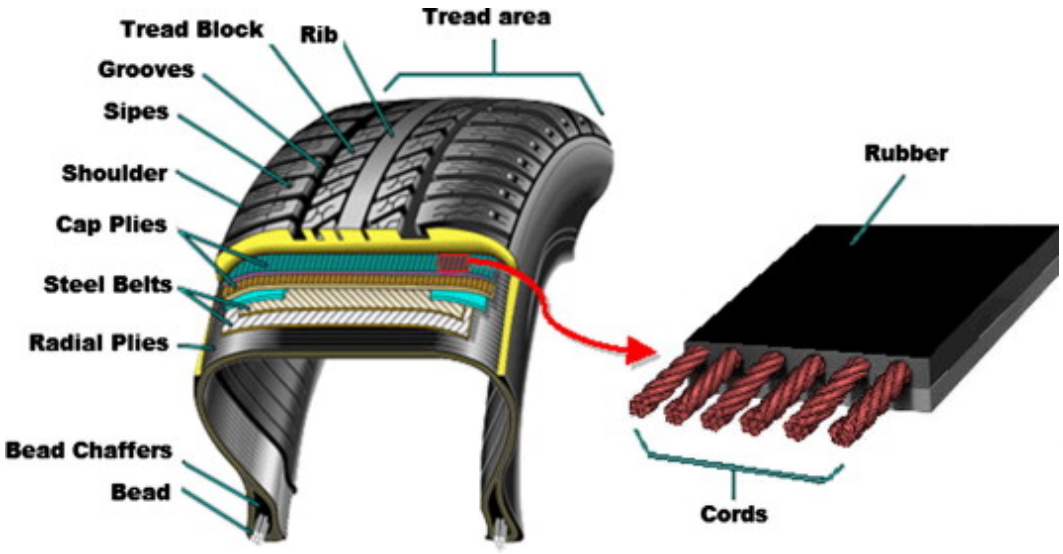

41. Drying and heat treating—i.e., stretching the textile cords at high temperatures—typically follows. This process reduces undesired thermal shrinkage.

42. On balance, aramid-nylon hybrid reinforcement cords were known to have better properties than the prior aramid-aramid and nylon-nylon cord constructions. For instance, when compared with aramid-aramid cords, the hybrid cords have improved fatigue resistance, higher elongation, lower raw material cost, and controlled shrinkage. And when compared with nylon-nylon cords, the hybrid cord will have a lower shrinkage, improved handling and cornering stability, speed performance, and rolling resistance.

B. Description of the ’663 Patent’s Specification

43. The ’663 patent relates to “a hybrid tire cord including heterogeneous yarns having different physical properties,” and specifically that an aramid yarn is 1.005 to 1.025 times longer than the nylon yarn it is twisted with. Ex. 1001, 1:6-7; cl. 1.

44. The specification acknowledges that the typical materials for tire cords are nylon and aramid. *Id.*, 1:38-39. Nylon has “low cost, superior adhesivity and superior fatigue resistance,” but “has a problem of causing flat spots due to low modulus and great deformation with variation in temperature.” *Id.*, 1:39-46. Aramid, on the other hand, has “almost no flat spot phenomenon” due to “very high modulus,” but is “very expensive.” *Id.*, 1:47-54. Tire molding is also relatively more difficult due to the high modulus. *Id.*, 1:54-57.

45. The specification explains that it was known that such disadvantages with each material could be solved by a “hybrid cord to which both nylon and aramid are applied.” *Id.*, 1:58-60. The specification acknowledges that “[t]ypically,” the aramid yarn has a “greater twist number” compared to the nylon yarn, and the yarns are twisted in opposite directions. *Id.*, 1:64-2:5. However, the specification alleges this method has “low production efficiency” because it requires a three-step process due to the yarns being twisted in opposite directions: (1) twisting the nylon yarn in one direction, (2) twisting the aramid yarn separately in the opposite direction, and

(3) twisting the two yarns together. *Id.*, 2:14-22. Moreover, because the aramid yarn has a higher twist number, the strength of the aramid is "greatly deteriorated." *Id.*, 2:32-37.

46. Thus, the specification claims to invent a new method where the nylon and aramid yarn are twisted in the same direction, and thus "are conducted in one twister, thereby improving production efficiency." *Id.*, 3:29-36, 4:34-37. The alleged new method also uses less twists for the aramid yarn, although this feature is not recited in the claims of the patent. Finally, the aramid yarn is "1.005 to 1.025 times" the length of the nylon yard when the cord is untwisted. *Id.,* 4:12-17.

C. The '663 Patent's Prosecution History

47. I have reviewed the prosecution history of the '663 patent and summarize it below.

48. The application to the '663 patent was filed June 28, 2016 and claims priority to a June 29, 2015 Korean patent application.

49. The original application's claims were broader than what was eventually allowed. The original independent claim 1 merely required that the nylon and aramid yarns were individually "primarily twisted" and that they be "secondarily twisted together" and that the aramid yarn was "1.005 to 1.025 times" the length of the nylon yarn. Ex. 1002, 144.

50. The examiner found that claims 1-8 were unpatentable over Love in view of Shepherd. Ex. 1002, 97-98. The examiner, however, indicated that claim 9 would be allowed if amended to resolve a Section 112 issue, specifically that it was not clear if the language of claim 9 required the method to "untwist" the cord, or if it was merely saying "if the product were untwisted, it would have certain characteristics." *Id.*, 96.

51. In response, the applicant canceled the first eight of the eleven claims. Original claim 9 was amended to clarify the Section 112 issue, resulting in the current claim set. *Id.*, 66. Following this amendment, the examiner allowed the claims.

D. Claim Construction

52. For the purposes of my analysis in this IPR proceeding, I understand that the words of a claim are given their plain meaning that those words would have had to a POSITA at the time of the alleged invention. I also understand that the structure of the claims, the specification, and the prosecution history may also be used to better construe a claim insofar as the plain meaning of the claims cannot be understood. Moreover, I understand that even treatises and dictionaries may be used, albeit under limited circumstances, to determine the meaning attributed by a POSITA to a claim term at the time of filing. Furthermore, I understand that a Patent

Owner's own apparent interpretation of certain terms in related proceedings can be considered to determine the meaning of patent claims in an IPR proceeding.

53. I have followed this approach in my analysis, and, except as explicitly stated below, I have applied the plain and ordinary meaning of those terms as the would have been interpreted by a POSITA at the time the invention was made (not today). For purposes of my analysis here, I have used June 29, 2015 as the date of the invention.

54. I note that the '663 patent's specification provides descriptions for certain terms found in the claims. In my opinion, these descriptions are consistent with the terms' plain meaning. However, while I do not provide any opinion as to whether the patentee acted as their own lexicographer, I apply these descriptions as definitions for their respective term.

1. "primarily twisted yarn"

55. The specification of the '663 patent states that the term "primarily twisted yarn" "refers to a single yarn made by twisting one filament yarn in one direction." Ex. 1001, 5:14-16. I apply this description in my analysis below.

2. "plied yarn"

56. The specification states that this term "refers to a yarn made by twisting two or more primarily twisted yarns together in one direction." *Id.*, 5:17-19. The

specification notes that this term is "also called a 'raw cord.'" *Id*. I apply this description in my analysis below.

3. "tire cord"

57. The specification states that the term "tire cord" "includes the 'raw cord' as well as 'dip cord' which means a plied yarn containing an adhesive agent so that it can be directly applied to rubber products." *Id.*, 5:20-23. In other words, a tire cord can mean either an untreated raw cord, or a dip cord that is the result of dipping a tire cord into an adhesive agent solution to apply it to a rubber product. I apply this description in my analysis below.

VI. OVERVIEW OF THE PRIOR ART

A. Tamura (Ex. 1006)

58. Japanese Patent No. 2009-68549 ("Tamura") (Ex. 1005) was published on April 2, 2009. Exhibit 1006 is the certified translation of Tamura.

59. Tamura discloses and claims a large diameter rubber hose reinforced by compounding fiber fabric and/or fiber cord composed of a composite fiber of aramid fiber and nylon fiber. Tamura at cl. 1. Tamura discloses that, like tires, large diameter hoses used for transporting large amounts of liquid (*e.g.*, crude oil) are generally subjected to high pressures and thus require a reinforcing layer. *Id.*, ¶2. Tamura "aims to provide a large-diameter rubber hose that maintains the adhesive strength between the rubber layer and the reinforcing material layer … [that] exhibits

little change in hose diameter due to fluid pressure when transporting fluid, and has excellent durability and dimensional stability." *Id.*, ¶9.

60. According to Tamura, the "above-mentioned composite fiber cord is obtained by lower twisting a predetermined number of aramid fibers and nylon fibers, each of which is individually twisted, and then upper twisting the resulting fibers together." *Id.*, ¶18. "The number of lower twists is usually set to be the same as the number of upper twists." *Id.*, ¶23.

B. Rowan (Ex. 1007)

61. U.S. Pat. No. 6,886,320 ("Rowan") was published March 27, 2003.

62. Rowan discloses a single apparatus that simultaneously twists two types of single threads into twisted filament yarns and then continuously twists the two filament yarns into a cord.

63. Specifically, Rowan teaches that, in the prior art, a "ring twist process" was used to "produce a cable in two steps" where "[t]he yarn is twisted in a ply," which "means a twisted single yarn," and then the "ply is … twisted into a cable of two or more plies." Rowan at 4:5-14. Rowan notes that in the prior art, these two steps "consist[] of separate and independently operated machines dedicated respectively to twisting the yarn into a ply'" and "twisting the ply into a cable on a separate machine." *Id.*, 4:15-24. Such a process "is laborious and expensive." *Id.*

64. Thus, Rowan notes that "in many instances now has replaced the ring twist operations with equipment that ***combines both steps into a single machine***, commonly referred to as a direct [c]able unit ('DCU')." Rowan at 5:50-53. Rowan's DCU is depicted below in Figure 4 and clearly depicts a single apparatus.

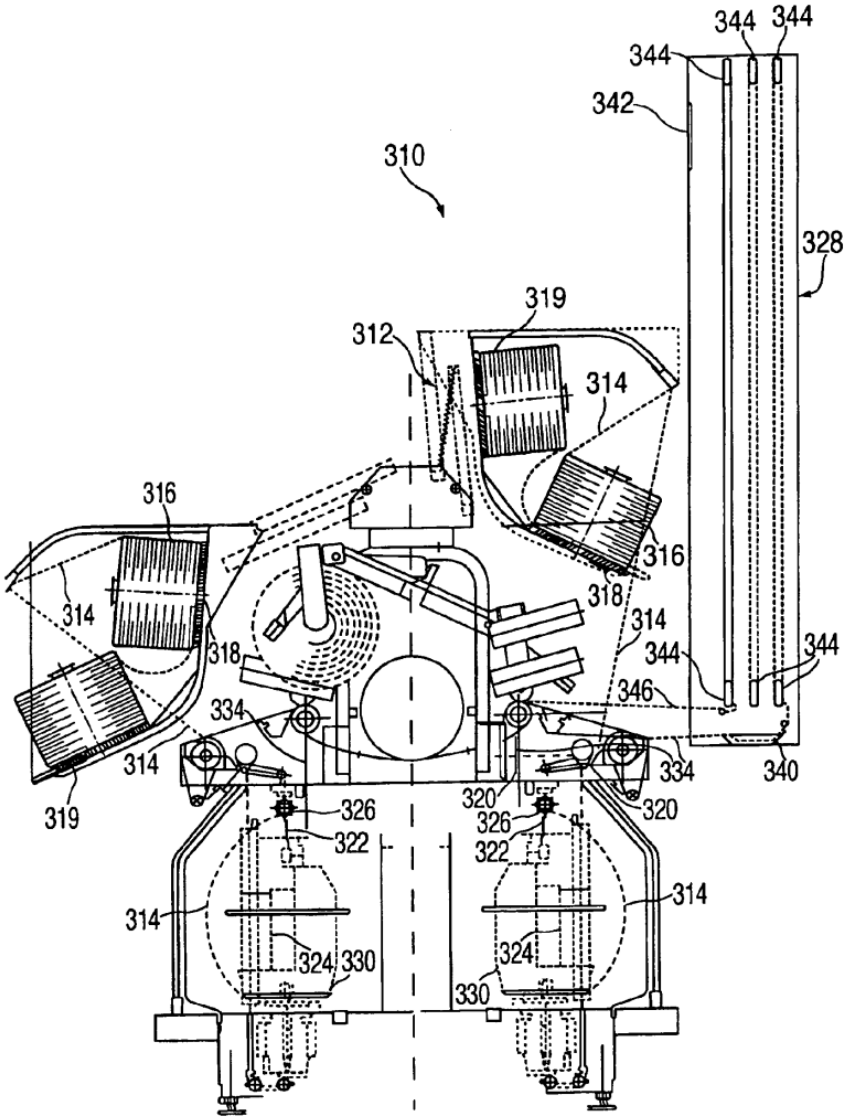

FIG. 4

65. Rowan explains that "outer yarn 314" (orange) is pulled from a "supply package 316" and is pretensed by "brake 320." Rowan at 7:36-39. The brake "pretense[s] the yarn[] for twisting." *Id.*, 7:43-45. Similarly, "inner yarn 322" (green) is drawn from "inner supply package 324" and is tensioned by "brake 326." *Id.*, 7:47-53. The tension of the two brakes may be "maintained via tension measuring devices." *Id.*, 7:53-55. The two yarns are then "twisted into a cord 334" (orange-green). *Id.*, 7:61-64.

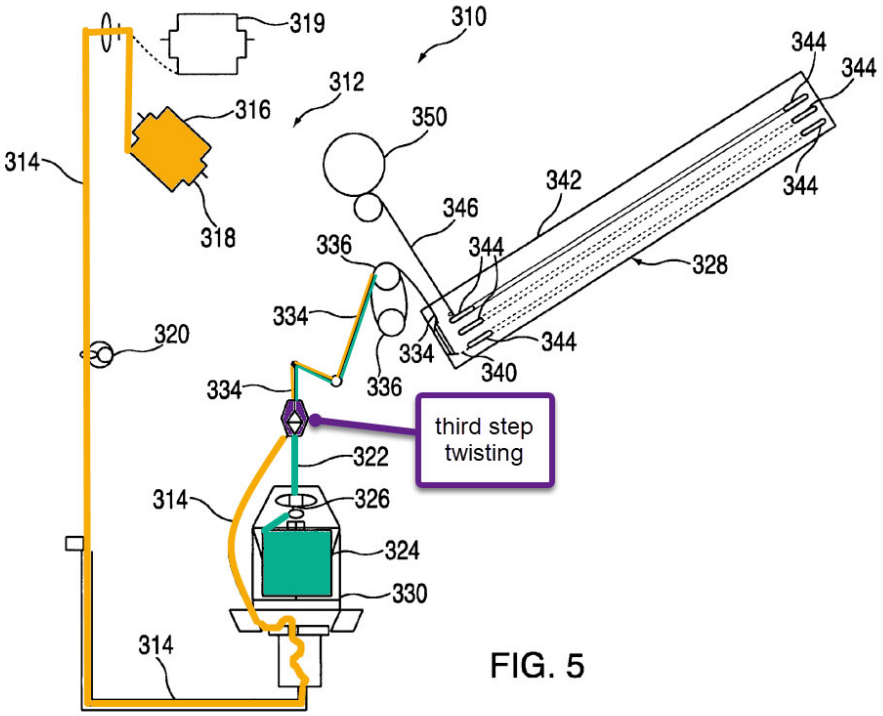

FIG. 5

C. Buchanan (Ex. 1010)

66. European Patent Application 0405887A1 ("Buchanan") was published October 13, 1993.

67. Buchanan discloses a single apparatus that simultaneously twists two types of threads into yarns and then continuously twists the yarns into a cord. Figure 1, as annotated below, depicts Buchanan's apparatus "for making a composite yarn." Buchanan at ¶9. In Figure 1, each strand of yarn is "unwound from packages" and is applied tension by "tensioning devices 13." *Id.*, ¶10. Buchanan teaches that a "twisting apparatus 32" (red) comprises a "lower air jet 34 for applying ***twist*** to the yarn in the S direction." Buchanan at ¶11. Buchanan further notes that the twisted yarns have "substantially the same twist pattern since they are acted upon by the same apparatus 32." *Id.*, ¶13. Finally, Buchanan teaches that the two yarns are then converged in compression tube 38 and "pl[ied] together in a direction of twist … which is opposite to the bundle direction of twist" to form composite yarn 42 (orange-green). *Id.*, 3:50-4:5.

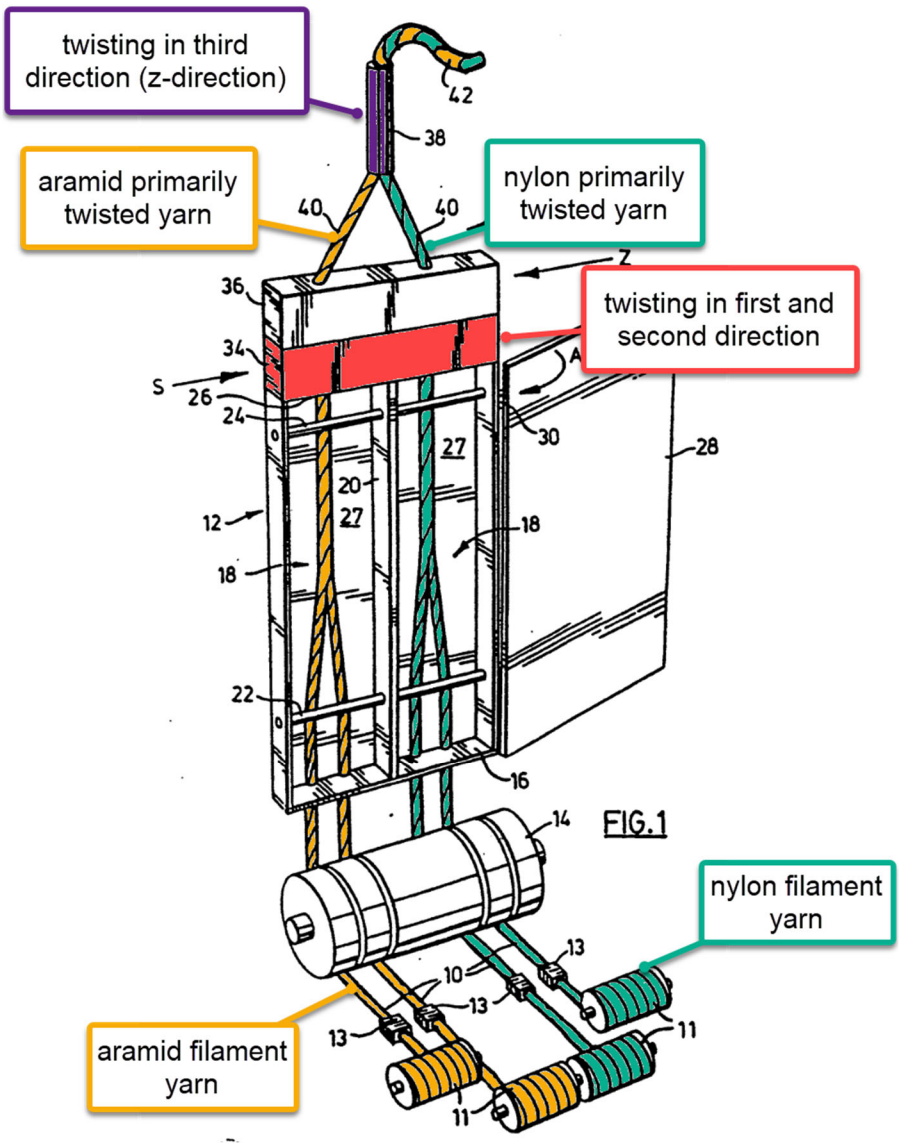

D. Fritsch (Ex. 1011)

68. U.S. Pat. App. Pub. No. 2003/0159768 ("Fritsch") was published August 28, 2003.

69. Fritsch teaches a method for creating a cord with an "unbalanced configuration" which "means that at least two yarns [of the cord] have different lengths." Fritsch at ¶19. Fritsch notes that its method results in a "hybrid cabled cord of polymeric materials having excellent properties at a reduced capital cost and

is useful as a tire cord." *Id.*, ¶2. Fritsch explains that in hybrid cords (*i.e.* where the cord is made up of multiple types of material), it is typical for one yarn having a higher modulus (*i.e.* a material's ability to resist being deformed) will have a higher twist level compared to the yarn with a lower modulus so that the twisted yarns will break simultaneously. *Id.*, ¶5. Fritsch notes that conventionally, the design of cabling machines "is intended to achieve a balanced tension control in the cabled cord produced which effectively means that the two yarns are pulled off with the same rate and thus equal lengths are incorporated into the cabled cord." *Id.*, ¶24. However, Fritsch's inventors discovered that "modulat[ing] the tension on the individual plies" can result in an "unbalanced configuration" where one yarn is longer than the other when untwisted. This results in a cord with "greater tensile strength retention." *Id.*, ¶27. Fritsch describes the difference in length of the yarns as a Coring level, which is the percentage difference in length of the higher modulus yarn relative to the lower modulus yarn. *Id.*, ¶¶19-20. For example, a Coring level of 5% means the higher modulus yarn is 5% longer than the lower modulus yarn. *Id.*

70. Fritsch provided experimental results that showed an improvement with unbalanced configurations, *i.e.* a non-zero Coring level. Specifically, Fritsch tested 10 "inventive examples" using PEN (polyethylene napthalate) and PET (polyethylene terephthalate) materials, with Coring level ranges from -15% to 15%,

and compared their physical properties to three cords with 0% Coring level. These results are shown in Table 1, reproduced below. *Id.*, ¶40. The table shows that having a positive Coring level results in "a combination of a high breaking strength and a high elongation at break." *Id.*, ¶41. Fritsch notes that the desired combination of "physical properties (breaking strength, elongation at break, energy to break and modulus) can be optimized by an appropriate coring level." *Id.*

TABLE 1

Inv. Ex.	Comp. Ex.	Cord components	Coring level	Breaking Strength (N)	Elongation at Break (%)	LASE at 1.6% (N)	LASE at 3% (N)	Elongation (%) at 45 N
	A	PEN/PEN	0	199.2	10.4	21.4	48.7	2.7
1		PEN/PET	−15%	154	n.d.	n.d.	n.d.	n.d.
2		PEN/PET	−12.2%	154.3	9.3	20.8	45.4	3.1
3		PEN/PET	−9.2%	160.8	10.2	17.5	40.5	3.4
4		PEN/PET	−6.3%	164.7	11.1	16.5	32.8	4.0
5		PEN/PET	−3.2%	170.1	11.4	15.7	33.9	3.9
	B	PEN/PET	0	180.5	12.4	15	32.7	4.1
6		PEN/PET	0.9%	184	12.8	14.6	33.7	4.1
7		PEN/PET	4.5%	184.5	13.8	13.8	30.8	4.3
8		PEN/PET	7.7%	183.5	15.4	13.2	28.6	4.6
9		PEN/PET	13.9%	170.4	16.3	12.8	27.6	4.7
10		PEN/PET	15%	170	n.d.	n.d.	n.d.	n.d.
	C	PET/PET	0	177.7	18.9	12.5	26.2	5.2

VII. GROUNDS OF REJECTION

A. <u>Ground 1</u>: Tamura in View of Fritsch, Rowan and Optionally Buchanan Renders Obvious Claims 1-3

71. A summary of this ground is as follows. Tamura describes a nylon yarn and an aramid yarn twisted in one direction, which are then twisted in an opposite direction to form a hybrid tire cord. Rowan describes a single twister that twists two single strand fibers into two yarns in one direction, and then continuously twist the

yarns in an opposite direction to form a cord, especially in view of Buchanan which discloses simultaneously twisting yarns in one direction. And Fritsch discloses applying less tension to one yarn during twisting so that it is 0.5% to 2.5% longer than the other yarn.

72. Together, these references disclose each and every limitation of claims 1-3, and as I explain below, a POSITA would have been motivated to combine these references.

1. Motivation to Combine

73. Below, I explain why a POSITA would have been motivated to combine Tamura with Rowan's one-machine process. I also explain why a POSITA would have been motivated to combine Tamura with Buchanan's single machine. Finally, I explain why a POSITA would have been motivated to combine Tamura with Fritsch's teachings of using tension to alter the length of the high modulus yarn.

(i) Motivation to Combine Tamura with Rowan

74. In my opinion, a POSITA would have been motivated to combine Tamura's teachings of a hybrid tire cord with Rowan's single twister apparatus.

75. As I discuss below, Tamura describes a method for manufacturing a tire cord using a well-known two-step process: first, twisting two different single threads of yarn into a respective twisted yarn (or a "ply"), and then twisting two plies into a cord. Rowan also describes the same two-step process, but combining these steps

"into a single machine," such that the steps are performed simultaneously and continuously. Rowan at 4:3-14, 5:50-53. A POSITA would have therefore been motivated to combine Tamura's two-step process with Rowan's teachings of a one-machine process for performing the twisting steps simultaneously and continuously. In addition, Rowan teaches that the one-machine process includes dipping, drying, and curing the tire cord, which a POSITA would have also been motivated to combine with Tamura.

76. Rowan itself provides several benefits with using its single apparatus, though I note that such benefits were well-known by ordinary artisans at the time of the '663 patent. Rowan notes that, in the prior art, a "ring twist process" performed the two steps using "separate and independently operated machines" for each step. Rowan at 4:15-24. Rowan teaches that such a process "is laborious and expensive," because such "conventional processes involve a number of individual steps and multiple transfers of product," which are "labor and cost intensive." *Id.*, 4:15-24, 1:38-51. Rowan explains that carrying out "a one-machine process … eliminates the multiple package handling and multi-million dollar capital requirements" for separate machinery for each step. *Id.*, 2:3-15. Rowan goes on to explain that "[t]hese machines combine the ply and twisting step into one operation, thus rendering the tire cord production process more efficient and cost effective." *Id.*, 1:53-61.

77. Rowan also explains that being able to manufacture cords continuously allow manufacturers to "produce larger package sizes and improve quality by requiring fewer knows or splices in the final cord product." *Id.* All of these reasons provide well-known and cogent benefits that would motivate a POSITA to use Rowan's one-machine process to perform Tamura's two-step process as it would lead to less cost, faster production times, better yields, and an overall increase in manufacturing efficiency. *See also id.*, ¶39 ("This combination significantly reduces the cost and space required in the conversion operation.").

78. Rowan's one-machine process, however, was already widely-known by the time of the '663 patent. Other references describe such machines and their benefits. For example, Fritsch notes that conventional "ring-twister machine[s]" are "disadvantageous as it requires multiple steps to yield the final product; the constituent yarns must first be twisted separately and then combined in another step to be twisted into a cabled cord." Fritsch at ¶5. Fritsch describes "a direct cabling machine" that can "operate at considerably higher speeds (30-50% greater) than conventional ring twisters," because they "complete the production of cabled cord in one step whereas ring twisters require two steps." *Id.*, ¶23. These teachings, which are consistent with Rowan's, would have provided a POSITA additional motivation to combining Tamura with Rowan.

79. In addition, Rowan expressly teaches that its one-machine process can be used for manufacturing tire cords as described in Tamura. As discussed above, Rowan describes a two-step process where a single thread of yarn is twisted into a twisted yarn, and then multiple twisted yarns are twisted into a tire cord. This is the same process described in Tamura. Moreover, Rowan notes that it is directed to tire cords made from "nylons" and "aramids," the two materials disclosed by Tamura. Rowan at 6:40-43. Thus, a POSITA would understand that Rowan's teachings is simply the use of a known technique to improve a similar device (Tamura) in the same way.

80. In addition, Rowan teaches that its one-machine process also includes treatment of the cord. Rowan at 2:15 ("[A] one-machine cabled and treated cord unit ('OCT')."). Specifically, once the cord is formed, it is treated via the "treating subunit 328." *Id.*, 7:65-8:8. The treatment process involves dipping the tire cord in an adhesion agent such as RFL, using ambient air to dry the raw cord, and then curing the cord by applying heat. *Id.*, 8:66-9:28, Table 1. Thus, in my opinion a POSITA would also be motivated to combine Tamura and Rowan because Rowan's single machine apparatus also includes a treatment step, which provides the benefits of "elminat[ing] the handing and transport operations" that the prior art required for treating a tire cord.

81. In my opinion, a POSITA would have had a reasonable expectation of success in combining Tamura with Rowan. As discussed above, Rowan's one-machine process applies to the same two-step process and the same nylon and aramid materials described in Tamura—and such one-machine processes were well-known. Thus, a POSITA would expect the combination to successfully result in Tamura's teachings being performed in Rowan's machine such that the steps are performed simultaneously and continuously.

82. Finally, in my opinion, Tamura, Rowan and the '663 patent are all directed to the same field, especially, the manufacture of cords from twisting twisted yarns. Tamura at Abstract ("A large-diameter rubber hose formed using vulcanized rubber reinforced by compounding fiber fabric and/or fiber cord, characterized in that the fiber fabric and/or fiber cord is composed of a composite fiber of aramid fiber and nylon fiber."); Rowan at Abstract ("The method comprises the steps of twisting two or more yarns together to form a cable … performed on one machine without intermediate take-up."); Ex. 1001 at Abstract ("The hybrid tire cord includes a nylon primarily twisted yarn and an aramid primarily twisted yarn, wherein the nylon primarily twisted yarn and the aramid primarily twisted yarn are secondarily twisted together").

(ii) Motivation to Optionally Combine Tamura and Rowan with Buchanan

83. In my opinion, a POSITA would also be motivated to combine Tamura and Rowan with Buchanan's teaching of a single twister apparatus. I note in particular that while Rowan does not expressly depict that its single machine performs the step of twisting the yarns simultaneously (though it is expressly described), Buchanan does expressly describe and depict such a step.

84. Like Rowan, Buchanan describes a single machine that simultaneously twists two types of threads of yarns into plies and then continuously twists the plies into a cord. Buchanan expressly teaches that the two yarns have "substantially the same twist pattern since they are acted upon by the same apparatus," *i.e.* they are twisted simultaneously, as depicted below in the annotated Figure 1.

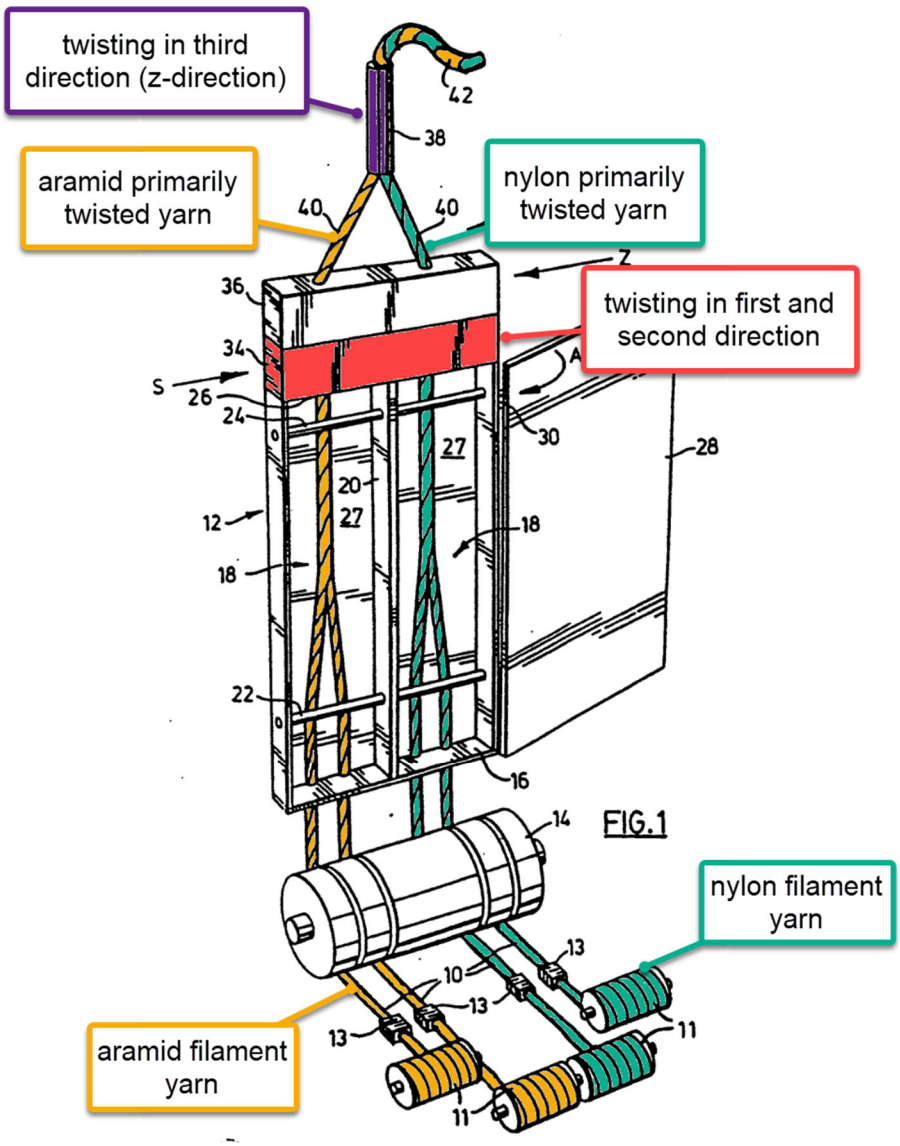

85. In my opinion, a POSITA would have been motivated to combine these elements because Rowan expressly teaches that the first step in its two-step process is "[t]he yarn is twisted in … a twisted single yarn." Rowan at 4:6-14. However, Rowan does not explicitly depict this first twisting step in the depictions of its apparatus. Thus, a POSITA would have been motivated to look to Buchanan in order to give effect to Rowan's teachings, specifically an apparatus that twists a

thread into a yarn, and does so ***simultaneously*** in order that the yarns can be twisted into a cord ***continuously*** as taught by Rowan. A POSITA would understand that simultaneity in the twisting of the yarns is needed in order that they are ready to be twisted to form a cord in Rowan's continuous process that lacks "intermediate take-up." Rowan at Abstract. If the yarns are not twisted at the same time, then the apparatus could not "treat[] the cord in a continuous process without intermediate take-up" as required by Rowan. Rowan at 7:23-24.

86. Buchanan's teachings of simultaneous twisting are necessary to give effect to Rowan's teachings of a one-machine continuous process for twisting cords. Thus, a POSITA would be motivated to incorporate Buchanan's teachings for all the same reasons discussed above that Rowan provided as benefits of its one-machine process.

87. In my opinion, a POSITA would have had a reasonable expectation of success in combining Buchanan with Tamura and Rowan. The combination would simply involve the application of Buchanan's simultaneous twisting with Rowan's single apparatus that is described as performing yarn twisting.

88. In my opinion, Buchanan is directed to the same field of endeavor as Tamura, Rowan, and the '663 patent, specifically the field of manufacturing cords from twisting strands of yarn. Buchanan at Abstract ("A composite yarn (42) comprising at least two yarn bundles plied together").

(iii) Motivation to Optionally Combine Tamura with Fritsch

89. In my opinion, a POSITA would have been motivated to combine Tamura, Rowan (and optionally Buchanan) with Frisch's teachings of applying different tension to yarns twisted to form a cord with one yarn being longer than the other. Specifically, a POSITA would be motivated to alter the tension so that the aramid yarn is 0.9% longer than the nylon yarn, since Fritsch teaches that such a difference provides beneficial improvements to the physical properties of the tire cord.

90. Fritsch teaches a method for creating a cord with an "unbalanced configuration" which "means that at least two yarns [of the cord] have different lengths." *Id.*, ¶19. Fritsch further teaches that an unbalanced configuration can be achieved by changing the tension applied to each yarn during twisting.

91. A POSITA would be motivated to combine these teachings in view of the benefits described by Fritsch. Specifically, Fritsch notes that its method results in a "hybrid cabled cord of polymeric materials having excellent properties at a reduced capital cost and is useful as a tire cord." Fritsch at ¶2. Fritsch explains that in hybrid cords (*i.e.* where the cord is made up of multiple types of material), it is typical for one yarn having a higher modulus (*i.e.* a material's ability to resist being deformed) will have a higher twist level compared to the yarn with a lower modulus so that the twisted yarns will break simultaneously. *Id.*, ¶5. Fritsch notes that

conventionally, the design of cabling machines "is intended to achieve a balanced tension control in the cabled cord produced which effectively means that the two yarns are pulled off with the same rate and thus equal lengths are incorporated into the cabled cord." *Id.*, ¶24. However, Fritsch's inventors discovered that "modulat[ing] the tension on the individual plies" can result in an "unbalanced configuration" where one yarn is longer than the other when untwisted. This results in a cord with "greater tensile strength retention." *Id.*, ¶27. Fritsch describes the difference in length of the yarns as a Coring level, which is the percentage difference in length of the higher modulus yarn relative to the lower modulus yarn. *Id.*, ¶¶19-20. For example a Coring level of 5% means the higher modulus yarn is 5% longer than the lower modulus yarn. *Id.*

92. Fritsch provided experimental results that showed an improvement with unbalanced configurations, *i.e.* a non-zero Coring level. Specifically, Fritsch tested 10 "inventive examples" using PEN (polyethylene napthalate) and PET (polyethylene terephthalate) materials, with Coring level ranges from -15% to 15%, and compared their physical properties to three cords with 0% Coring level. These results are shown in Table 1, reproduced below. *Id.*, ¶40. The table shows that having a positive Coring level results in "a combination of a high breaking strength and a high elongation at break." *Id.*, ¶41. Fritsch notes that the desired combination

of "physical properties (breaking strength, elongation at break, energy to break and modulus) can be optimized by an appropriate coring level." *Id.*

TABLE 1

Inv. Ex.	Comp. Ex.	Cord components	Coring level	Breaking Strength (N)	Elongation at Break (%)	LASE at 1.6% (N)	LASE at 3% (N)	Elongation (%) at 45 N
	A	PEN/PEN	0	199.2	10.4	21.4	48.7	2.7
1		PEN/PET	−15%	154	n.d.	n.d.	n.d.	n.d.
2		PEN/PET	−12.2%	154.3	9.3	20.8	45.4	3.1
3		PEN/PET	−9.2%	160.8	10.2	17.5	40.5	3.4
4		PEN/PET	−6.3%	164.7	11.1	16.5	32.8	4.0
5		PEN/PET	−3.2%	170.1	11.4	15.7	33.9	3.9
	B	PEN/PET	0	180.5	12.4	15	32.7	4.1
6		PEN/PET	0.9%	184	12.8	14.6	33.7	4.1
7		PEN/PET	4.5%	184.5	13.8	13.8	30.8	4.3
8		PEN/PET	7.7%	183.5	15.4	13.2	28.6	4.6
9		PEN/PET	13.9%	170.4	16.3	12.8	27.6	4.7
10		PEN/PET	15%	170	n.d.	n.d.	n.d.	n.d.
	C	PET/PET	0	177.7	18.9	12.5	26.2	5.2

93. Based on this chart, a POSITA would have been motivated to use one or more of these Coring levels with Tamura to achieve improved physical properties. In particular, a POSITA would have been motivated to use the Coring level of 0.9%, because it provides a good combination of high Breaking Strength, Elongation at Break, LASE at 1.6% and LASE at 3%. *Id.*, ¶40. Although Fritsch is directed to a cord with Coring level between 3% to 15%, Fritsch's results still show a benefit with using a Coring level of 0.9%, and thus a POSITA would be motivated to achieve a Coring level of 0.9%. Although Fritsch is directed to a cord with Coring level between 3% to 15%, Fritsch's results still show a benefit with using a Coring level of 0.9%, and thus a POSITA would be motivated to achieve a Coring level of 0.9%.

94. In my opinion, even though Fritsch describes a Coring level of 0.9% for a PEN/PET hybrid cord, a POSITA would have understood that the disclosed benefits would also apply to an aramid/nylon hybrid cord. First, Fritsch itself contemplates an aramid/nylon hybrid cord as one of its inventive cords. Fritsch at cls. 8-9. Second, an aramid/nylon hybrid cord uses material with a higher modulus (aramid) and material with a lower modulus (nylon), which is similar to a PEN/PET hybrid cord, as Fritsch describes PEN as having a higher modulus and PET having a lower modulus. Fritsch at ¶¶20-21. Third, Fritsch expressly teaches that cords using aramid and nylon are "[p]olymeric yarns useful in the inventive method and product" and expressly teachessuch cords preferably have a coring level between -25% and 25%. *Id.*, ¶29.

95. In my opinion, a POSITA would have had a reasonable expectation of success in combining the references. Fritsch's teachings could be readily applied to the single apparatus described in Rowan, since Rowan describes that it has tension controls. Specifically, Rowan teaches that the two yarns are tensioned with "tensioning devices" such as "brake[s]," "paired driver rolls," and "skewed rolls." Rowan at 7:38-43. Fritsch describes using the same tension devices. Fritsch at ¶23 ("This machine is designed and intended to obtain balanced cord constructions by means of rolls and brakes that control the yarn tension"). Moreover, Fritsch explains that its method is useful for all sorts of yarn materials, including "aramid, nylon-6,

nylon-6,6 and nylon-4,6," the same materials disclosed by Tamura. Fritsch at ¶29. In addition, Fritsch specifically teaches applying an unbalanced configuration of hybrid cord using nylon-6 yarn and aramid yarn or using nylon-6,6 yarn and aramid yarn. Fritsch at cls. 8-9. Thus, a POSITA would have expected the combination to yield the predictable result of improving the physical properties of Tamura's tire cord.

96. In my opinion, Fritsch is analogous art with Tamura and the '663 patent, because it is directed to the same field of endeavor of manufacturing cords from twisting strands of yarn. Fritsch at Abstract ("The present invention is directed to a hybrid cabled cord comprising: at least two yarns having different properties and an unbalanced configuration wherein the hybrid cabled cord has improved tensile strength retention.").

2. Claim 1

(i) 1[pre]: A method of manufacturing a hybrid tire cord comprising:

97. In my opinion, Tamura discloses this limitation.

98. Tamura discloses a tire cord made from twisting two primarily twisted yarns of different materials: nylon and aramid, *i.e.* ***a hybrid tire cord***. Tamura at ¶11 ("[A] large-diameter rubber hose … reinforced by compounding fiber fabric and/or fiber cord, characterized in that the fiber fabric and/or ***fiber cord is composed of a composite fiber of aramid fiber and nylon fiber***."); ¶18 ("In the present

invention, the above-mentioned aramid fibers and nylon fibers are composited to form aramid/nylon composite fiber cords and composite fiber fabrics."). As I discuss below in limitations 1[a], 1[b], and 1[c], Tamura discloses a plied yarn made by twisting an aramid primarily twisted yarn and a nylon primarily twisted yarn.

99. As I mentioned above, the '663 patent specification describes a "tire cord" as including either a raw cord or a dip cord. Ex. 1001, 5:20-23. Tamura's hybrid cord is a ***raw cord*** because it is formed by twisting two yarns and is therefore untreated at the time it is formed.

(ii) 1[a]: a first step of primarily twisting an aramid filament yarn in a first direction to form an aramid primarily twisted yarn;

100. In my opinion, Tamura discloses this limitation.

101. Tamura discloses that the "composite fiber cord is obtained by ***lower twisting*** [*i.e.* ***twisting in a first direction***] a predetermined number of aramid fibers [*i.e.* ***aramid filament yarn***] and nylon fibers, each of which is ***individually twisted***, and then upper twisting the resulting fibers together." Tamura at ¶18. The individually twisted aramid fibers form ***an aramid primarily twisted yarn*** because it is an aramid filament yarn twisted in one direction.

102. According to Table 1, the "lower twist" of the aramid yarn is a Z-direction twist. Tamura at ¶36, Table 1.

	Fiber material						Aramid fiber fineness ratio (%)	Total fineness (dt)	Number of twists (twists/10 cm)			
	Aramid fiber		N66		PET				Upper twist (S)	Lower twist (Z)		
	(dt)	(piece)	(dt)	(piece)	(dt)	(piece)				Aramid fiber	N66	PET
1			1400	2			0	2800	39		39	
2					1670	2	0	3340	39			39
1	1670	1	1400	1			54.4	3070	36	36	36	
2	1670	1	1400	1			54.4	3070	31	31	31	
3	1670	1	1400	1			54.4	3070	31	31	23	

(iii) 1[b]: a second step of primarily twisting a nylon filament yarn in a second direction to form a nylon primarily twisted yarn, the second step and the first step being conducted simultaneously; and

103. In my opinion, Tamura in view of Rowan and (optionally) Buchanan renders obvious this limitation.

104. With respect to the limitation ***"a second step of primarily twisting a nylon filament yarn in a second direction to form a nylon primarily twisted yarn,"*** Tamura discloses that the "composite fiber cord is obtained by ***lower twisting*** [*i.e.* ***twisting in a second direction***] a predetermined number of aramid fibers and nylon fibers [*i.e.* ***nylon filament yarn***], each of which is ***individually twisted***, and then upper twisting the resulting fibers together." Tamura at ¶18. The individually twisted nylon fibers form ***a nylon primarily twisted yarn*** because it is a nylon filament yarn twisted in one direction.

105. According to Table 1, the "lower twist" is a Z-direction twist. Tamura at ¶36, Table 1.

	Fiber material						Aramid fiber fineness ratio (%)	Total fineness (dt)	Number of twists (twists/10 cm)			
	Aramid fiber		N66		PET				Upper twist (S)	Lower twist (Z)		
	(dt)	(piece)	(dt)	(piece)	(dt)	(piece)				Aramid fiber	N66	PET
1			1400	2			0	2800	39		39	
2					1670	2	0	3340	39			39
1	1670	1	1400	1			54.4	3070	36	36	36	
2	1670	1	1400	1			54.4	3070	31	31	31	
3	1670	1	1400	1			54.4	3070	31	31	23	

106. With respect to the limitation ***"the second step and the first step being conducted simultaneously,"*** Tamura discloses that the nylon thread and the aramid thread are both "lower twist[ed]," before the two yarns are "upper twist[ed] … together." Tamura at ¶18. In my opinion, a POSITA would understand that both threads being "lower twist[ed]" means both threads are twisted ***simultaneously***.

107. As an alternative argument, it is my opinion that Rowan discloses this limitation and the two would be obvious to combine. Rowan discloses a single apparatus that simultaneously twists two types of single threads of yarn into twisted filament yarns and then continuously twists the two twisted filament yarns into a cord. As I discussed above, a POSITA would have found it obvious to combine the Rowan's teachings with Tamura.

108. Specifically, Rowan teaches that, in the prior art, a "ring twist process" was used to "produce a cable in two steps" where "[t]he yarn is twisted in a ply," which "means a twisted single yarn," *i.e.* what the '663 patent calls a ***primarily twisted yarn***, and then the "ply is … twisted into a cable of two or more plies," *i.e.*

what the ’663 patent calls a ***plied yarn*** or ***raw cord***. Rowan at 4:5-14. Rowan notes that in the prior art, these two steps “consist[] of separate and independently operated machines dedicated respectively to twisting the yarn into a ply’” and “twisting the ply into a cable on a separate machine.” *Id.*, 4:15-24. Such a process “is laborious and expensive.” *Id.*

109. Rowan teaches that the industry “in many instances now has replaced the ring twist operations with equipment that ***combines both steps into a single machine***, commonly referred to as a direct [c]able unit (‘DCU’),” *i.e.* ***a single twister***. Rowan at 5:50-53. Rowan’s DCU is depicted below in Figure 4 and clearly depicts a single apparatus.

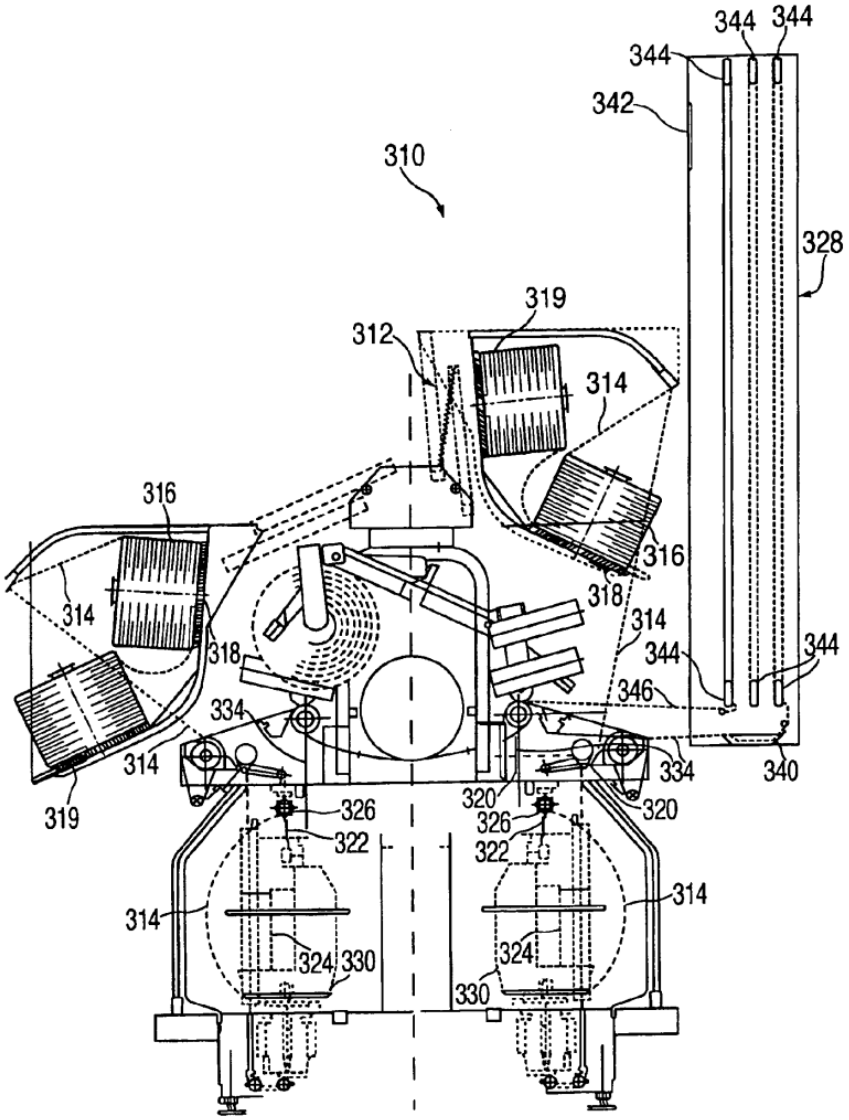

FIG. 4

110. Figure 5 provides an abstract schematic of the DCU. Since it is more abstract, it is easier to understand and identify where each of the components are. Rowan explains that "outer yarn 314" (orange) is pulled from a "supply package 316" and is pretensed by "brake 320." Rowan at 7:36-39. The brake "pretense[s] the yarn[] for twisting." *Id.*, 7:43-45. Similarly, "inner yarn 322" (green) is drawn

from "inner supply package 324" and is tensioned by "brake 326." Rowan at 7:47-53. The tension of the two brakes may be "maintained via tension measuring devices." *Id.*, 7:53-55. The two yarns are then "twisted into a cord 334" (orange-green). *Id.*, 7:61-64.

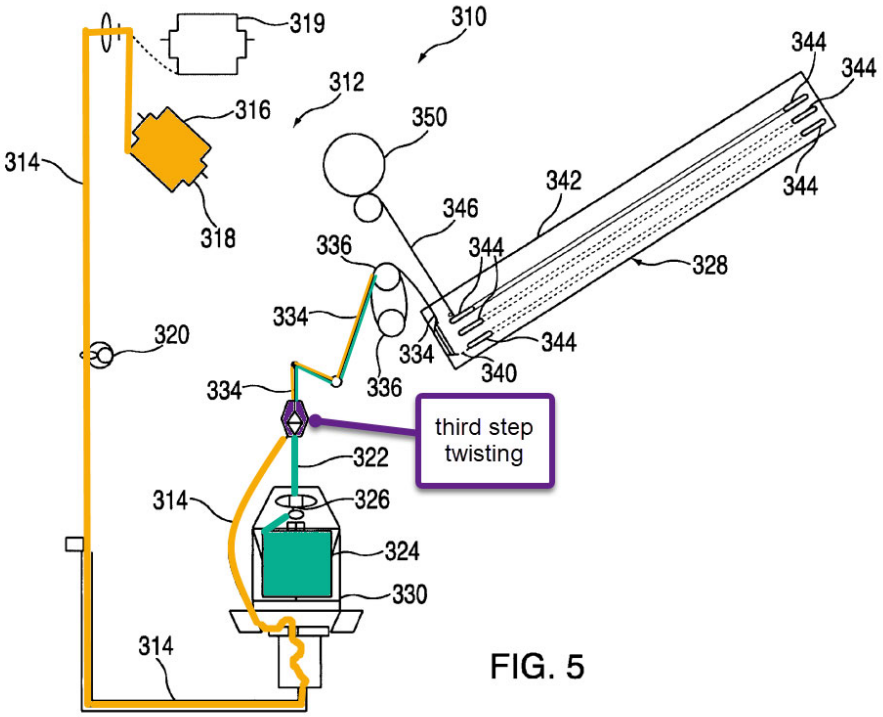

FIG. 5

111. In my opinion, based on these teachings, a POSITA would understand that the two yarns are pulled from a package, tensioned and twisted into a cord ***simultaneously***. As discussed above, Rowan describes that the DCU apparatus twists each individual yarn strand into "a twisted single yarn," *i.e.* ***first and second step***, prior to being twisted together into a cord. Rowan at 4:5-14. Although Figure 5 does not depict where the yarns are individually twisted into a twisted single yarn,

a POSITA would understand that the twisting, *i.e.* ***first and second step***, must occur simultaneously since each yarn is removed from the spool, tensioned, twisted into a cord, and treated in one "continuous process without intermediate take-up." Rowan at 7:22-24.

112. Although not necessary to establish unpatentability, in my opinion, the simultaneous twisting of the first and second step is also obvious in view of Buchanan. Buchanan discloses a single apparatus that simultaneously twists two types of threads into yarns and then continuously twists the yarns into a cord. Figure 1, as annotated below, depicts Buchanan's apparatus "for making a composite yarn." Buchanan at ¶9. In Figure 1, each strand of yarn is "unwound from packages" and is applied tension by "tensioning devices 13." *Id.*, ¶10. Although Figure 1 depicts that two strands are twisted into each "bundle," Buchanan does contemplate that a bundle "may have only one strand," which is consistent with Rowan, Tamura, and the recited claims where each twisted yarn has only one strand. *Id.*, ¶8. In the combination of Tamura, Rowan and Buchanan, Buchanan's apparatus would only have one strand per twisted yarn.

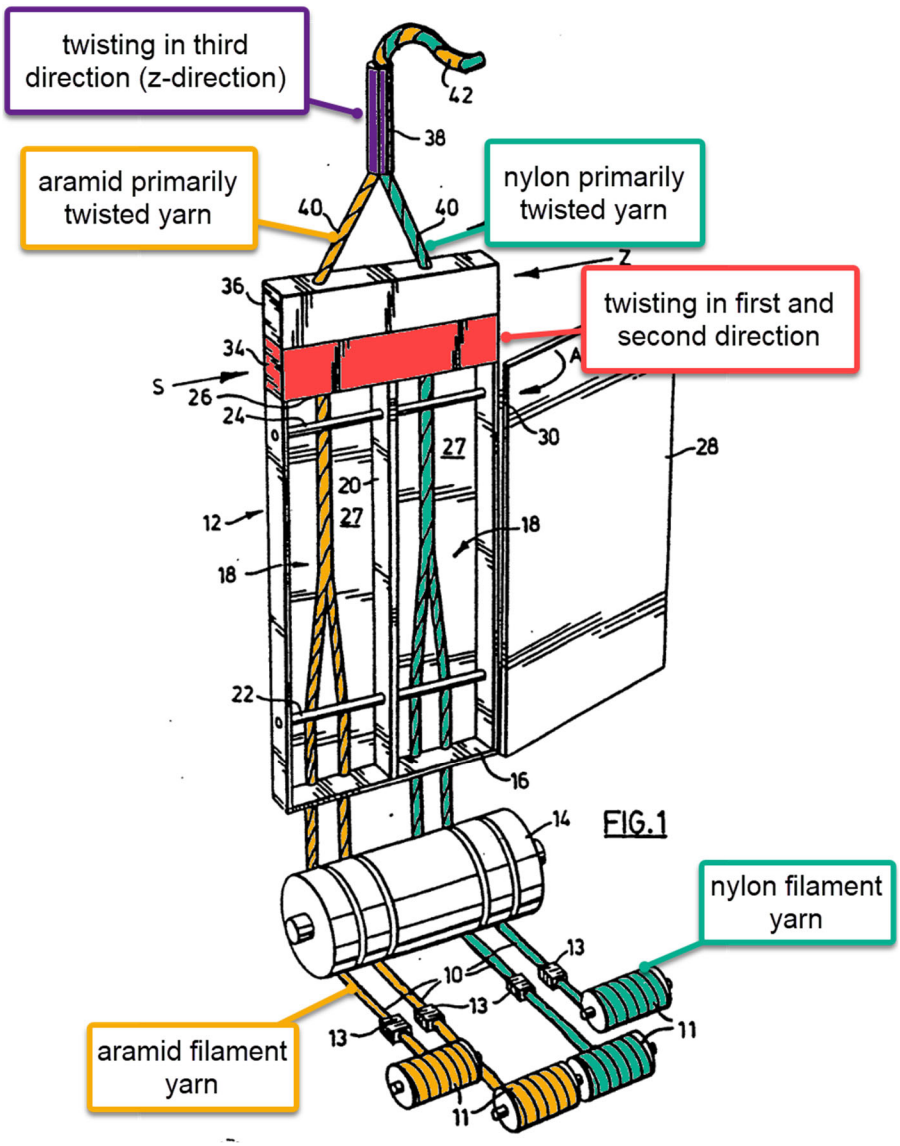

113. Buchanan teaches that a "twisting apparatus 32" (red) comprises a "lower air jet 34 for applying ***twist*** to the yarn in the S direction." Buchanan at ¶11. Buchanan further notes that the twisted yarns have "substantially the same twist pattern since they are acted upon by the same apparatus 32," *i.e.* they are twisted ***simultaneously***. *Id.*, ¶13. However, I do want to note that Buchanan also teaches a second twisting apparatus that occurs after the first, a "twisting apparatus 32" that

has an "upper air jet 34 for applying twist to the yarn in the [opposite] Z direction" that is actuated alternately with the lower air jet (resulting in a yarn that has "alternating S and Z bundle directions of twist, with equally spaced nodes of zero twist in between). But I do not include that apparatus in my combination, because it is not necessary to achieve the well-known benefits of the combination.

> *(iv) 1[c]: a third step of secondarily twisting the aramid primarily twisted yarn and the nylon primarily twisted yarn in a third direction to form a plied yarn, the third step being conducted continuously with the first and second steps,*

114. In my opinion, Tamura in view of Rowan (and optionally) Buchanan renders obvious this limitation.

115. With respect to the limitation ***"a third step of secondarily twisting the aramid primarily twisted yarn and the nylon primarily twisted yarn in a third direction to form a plied yarn,"*** Tamura teaches a subsequent third step where the "individually twisted" aramid and nylon yarns (*i.e.* ***aramid and nylon primarily twisted yarns***) are "then upper twist[ed] … together," *i.e.* ***a third twist direction***. Tamura at ¶18. This results in a ***plied yarn*** because, as I discussed above, the '663 patent describes a "plied yarn" as "a yarn made by twisting two or more primarily twisted yarns together in one direction," which is exactly what Tamura is describing.

116. According to Table 1, the "upper twist" is an S-direction twist, which is the opposite of the lower twist. Tamura at ¶36, Table 1.

	Fiber material						Aramid fiber fineness ratio (%)	Total fineness (dt)	Number of twists (twists/10 cm)			
	Aramid fiber		N66		PET				Upper twist (S)	Lower twist (Z)		
	(dt)	(piece)	(dt)	(piece)	(dt)	(piece)				Aramid fiber	N66	PET
1			1400	2			0	2800	39		39	
2					1670	2	0	3340	39			39
1	1670	1	1400	1			54.4	3070	36	36	36	
2	1670	1	1400	1			54.4	3070	31	31	31	
3	1670	1	1400	1			54.4	3070	31	31	23	

117. With respect to the limitation ***"the third step being conducted continuously with the first and second steps,"*** Tamura discloses that the "upper twist[ing]" of the two yarns occurs immediately after the two yarns are twisted from fibers. In my opinion, a POSITA would understand this disclosure in Tamura as indicating that the upper twisting is performed ***continuously*** with the previous steps.

118. Alternatively, as I discussed above, Rowan discloses a single apparatus that simultaneously twists two types of single threads into yarns and then continuously twists the yarns into a cord. Following the twisting of single threads into twisted yarns, the two yarns are "twisted into a cord 334" (orange-green), *i.e.* ***the third twisting step***, in a "***continuous*** process," *i.e.* ***continuously with the first and second twisting steps***. Rowan at 7:61-64, 7:23-24.

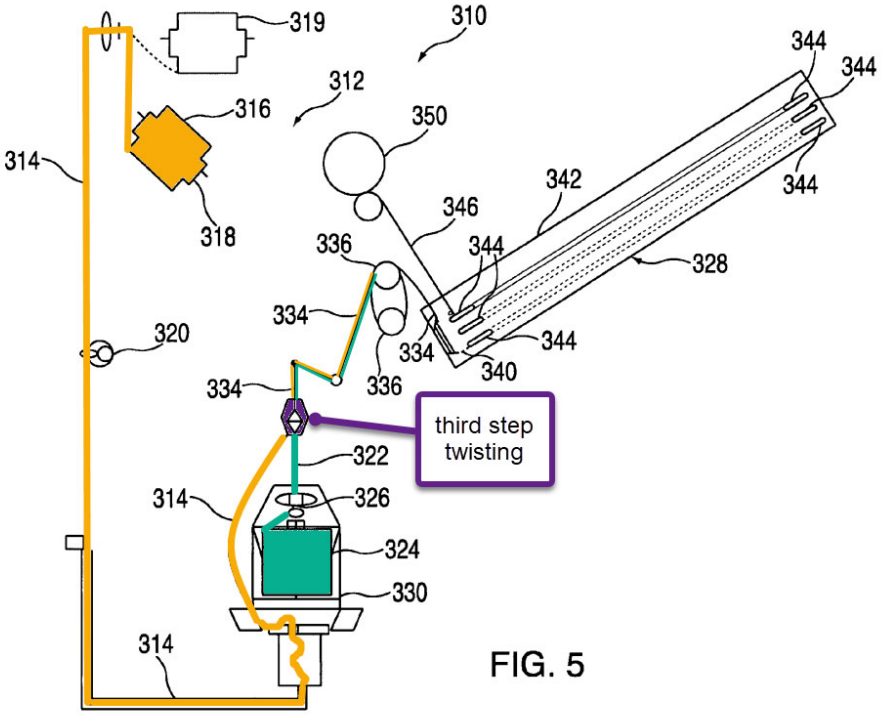

119. In my opinion, a POSITA would also consider Buchanan's teachings, which teaches that the two yarns are then converged in compression tube 38 and "pl[ied] together in a direction of twist … which is opposite to the bundle direction of twist" to form composite yarn 42 (orange-green). *Id.*, 3:50-4:5. As can be seen in the below figure which I have annotated, the process is performed continuously by a single apparatus. And as I discussed above, it would be obvious to combine these teachings with Tamura.

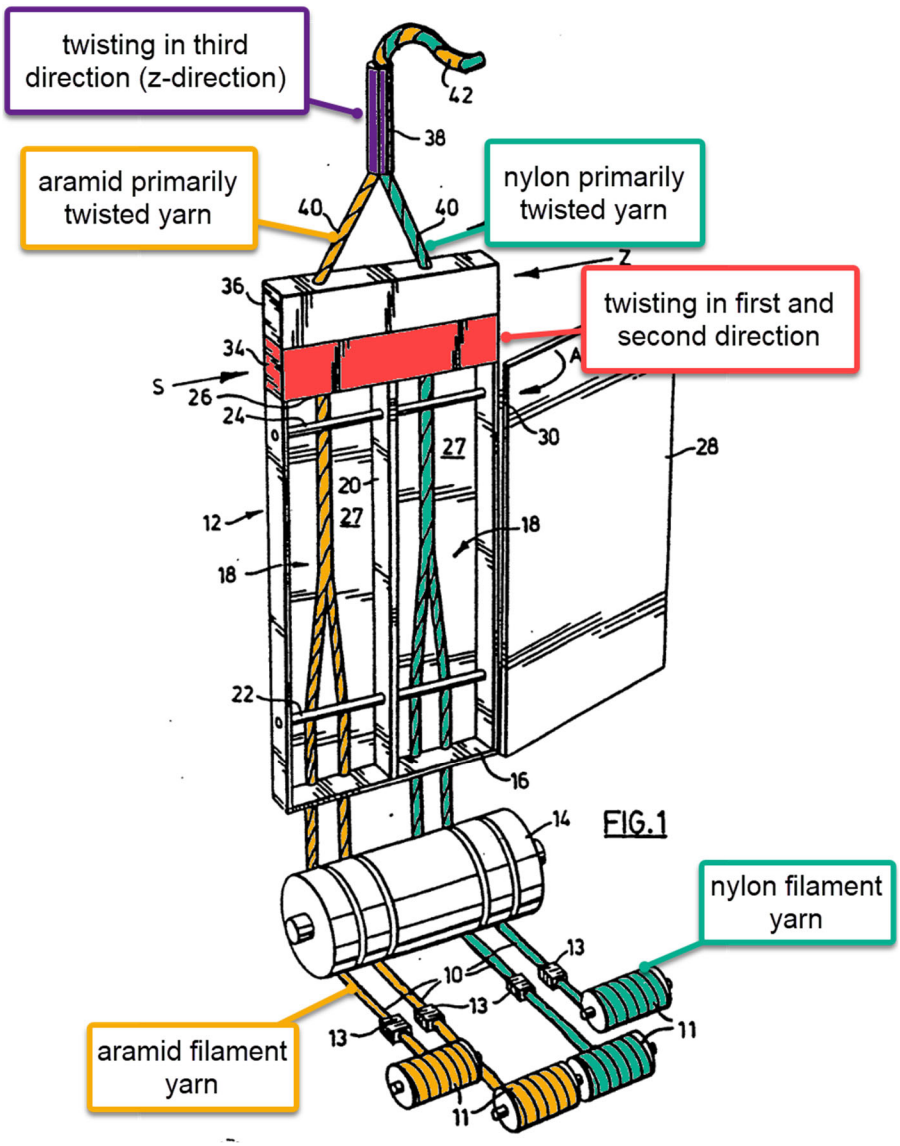

(v) 1[d]: wherein the first, second and third steps are conducted by one twister,

120. As I discussed above, Rowan teaches a single apparatus, *i.e.* ***one twister***, that performs all three steps in a continuous process.

(vi) 1[e]: the second direction is the same as the first direction,

121. In my opinion, Tamura discloses this limitation.

122. As discussed above for limitations 1[a] and 1[b], Tamura teaches that the aramid fibers (fibers that are twisted in a ***first direction***) and the nylon fibers (fibers that are twisted in a ***second direction***) are "lower twist[ed]," in the ***same direction***, specifically the Z-direction. Tamura at ¶¶18, 36, Table 1.

	Fiber material						Aramid fiber fineness ratio (%)	Total fineness (dt)	Number of twists (twists/10 cm)			
	Aramid fiber		N66		PET				Upper twist (S)	Lower twist (Z)		
	(dt)	(piece)	(dt)	(piece)	(dt)	(piece)				Aramid fiber	N66	PET
1			1400	2			0	2800	39		39	
2					1670	2	0	3340	39			39
1	1670	1	1400	1			54.4	3070	36	36	36	
2	1670	1	1400	1			54.4	3070	31	31	31	
3	1670	1	1400	1			54.4	3070	31	31	23	

(vii) 1[f]: tension applied to the nylon filament yarn in the second step is higher than tension applied to the aramid filament yarn in the first step in such an amount that, if the secondary twist of the hybrid tire cord with a predetermined length were untwisted, the aramid primarily twisted yarn would be 1.005 to 1.025 times longer than the nylon primarily twisted yarn.

123. In my opinion, Tamura in view of Fritsch renders obvious this limitation.

124. With respect to the limitation ***"tension applied to the nylon filament yarn in the second step is higher than tension applied to the aramid filament yarn in the first step,"*** Fritsch discloses creating a cord with an "unbalanced configuration" by altering the tension applied to the yarns where one of the cord's

yarns is longer than the cord's other yarn. As I explained above, such teachings would have been obvious to combine with Tamura.

125. Specifically, Fritsch is directed to creating a "cabled cord" by twisting two yarns, each of which is "a plurality of continuous fibers." Fritsch at ¶¶14, 16. Fritsch also teaches that the cord can be a "hybrid cabled cord" where the two yarns have "different properties," because they are, for example, made from different materials. *Id.*, ¶15.

126. Fritsch explains that its novelty is introducing a method for creating a cord with an "unbalanced configuration" which "means that at least two yarns [of the cord] have different lengths." *Id.*, ¶19. Fritsch teaches that an "unbalanced configuration" can be achieved by adjusting the tension controls of the twister that applies tension as the fibers are twisted into yarns. *Id.*, ¶¶24-25. In prior art methods, the tension on the yarns was "balanced," which "effectively means that the two yarns are pulled off with the same rate and thus equal lengths are incorporated into the cabled cord." *Id.*, ¶24. The inventors of Fritsch, however, noted that by changing the "tension on the individual plies," an unbalanced configuration can be achieved. *Id.*, ¶25. In particular, the tension on the yarns can be made unbalanced by "wrapping the two yarns around the butterfly pulley an unequal number of times." *Id.* The "yarn with more wraps," *i.e.* ***has higher tension applied***, will have

"increased friction and thus reduced slippage so it is pulled less than the other yarn, and will have ***a lesser length*** in the resulting cabled cord." *Id.*, ¶25.

127. Fritsch further teaches that the yarn with "higher modulus" will have a longer length than the yarn with "lower modulus," and therefore will have less tension applied during twisting. *Id.*, ¶¶20, 25. "Modulus" refers to a material's ability to resist being deformed, and it was well-understood that aramid yarn has a higher modulus than nylon yarn. Tamura confirms this, stating that "aramid fibers … are superior in … elastic modulus," whereas "nylon fibers reduces the overall modulus of the composite fiber." Tamura at ¶¶15, 6.

128. As I discussed above, it would have been obvious to apply Fritsch's teachings to Tamura. When combined, Tamura's nylon yarn, having a lower modulus, would have a ***higher tension applied*** than the aramid yarn, which has a higher modulus. This results in the aramid yarn having a longer length than the nylon yarn.

129. With respect to the limitation ***"if the secondary twist of the hybrid tire cord with a predetermined length were untwisted, the aramid primarily twisted yarn would be 1.005 to 1.025 times longer than the nylon primarily twisted yarn,"*** Fritsch teaches that the ratio of the lengths of the yarns is measured using a value called "coring level," which Fritsch discloses can be ***1.005 to 1.025 times longer***. Fritsch at ¶19. The "coring level" is measured by "taking a sample of one meter of

cabled cord [*i.e.* ***hybrid tire core with a predetermined length***] and ***untwisting*** the cable in order to separate the two yarns which compose it," following which the two yarns "are then ***untwisted*** by the same number of turns as it took to separate the cable, and in the opposite direction, to yield the two yarns in their as-fed state," *i.e.* ***the hybrid tire cord is untwisted***. Fritsch at ¶19. The "coring level" is calculated as $Coring = (A - B)/B$ "wherein A is the length of the yarn having the higher modulus," *i.e.* ***the aramid primarily twisted yarn***, and "B is the length of the yarn having the lower modulus," *i.e.* ***the nylon primarily twisted yarn***. *Id.*

130. When the higher modulus yarn is ***1.005 to 1.025 times longer*** than the lower modulus yarn, the Coring level is 0.005 to 0.025, or ***0.5% to 2.5%***.

131. Fritsch teaches Coring levels of 0.5% to 2.5% as required by the claims. Fritsch mentions that a "[p]referred" Coring level is a "non-zero" value "no greater than about 25% and no less than about -25%," which includes the claimed range. Fritsch at ¶29.

132. For example, in Table 1, one of the "inventive cords" that was tested had a Coring level of 0.9%. Fritsch at ¶40. I note that this cord had a relatively high Breaking Strength of 184 (second highest among the tested cords) and a relatively high Elongation at Break percentage of 12.8%. *Id.* Fritsch notes that it is desirable to balance the two values, and that is also something a POSITA would have understood very well. *Id.*, ¶41. Such physical properties had the benefit of increased

resilience and strength. The desirable breaking strength of this inventive cord is depicted in the below annotated Figure 2, which is a graph of the Coring level of the tested inventive cords against their Breaking Strength.

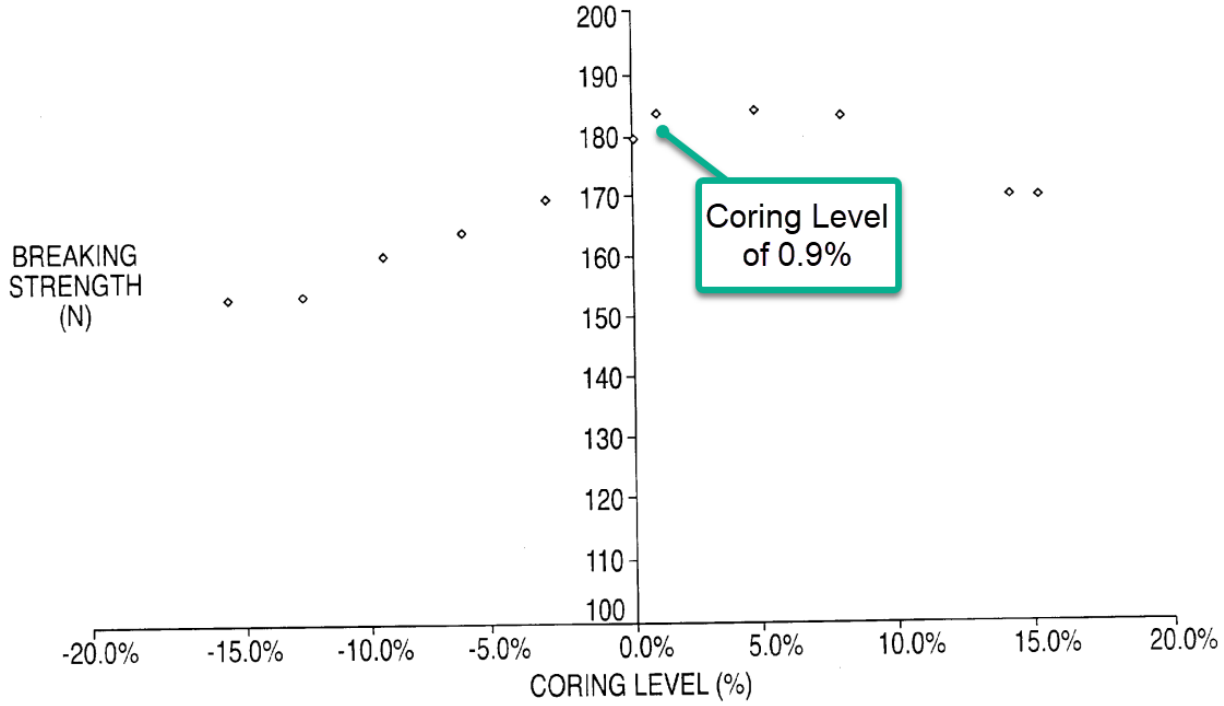

FIG. 2

133. As I discussed above, a POSITA would have been motivated to combine Fritsch's teachings with Tamura.

3. Claim 2

134. Rowan teaches that its single apparatus for twisting a cord also puts the cord through the treatment process described in Claim 2. As I discussed above, it would have been obvious to combine Tamura with Rowan's single apparatus.

> *(i) 2[pre]/2[a]: The method according to claim 1, further comprising: dipping the plied yarn in an adhesive agent solution;*

135. Rowan teaches that in its "one-machine process," once the yarns are twisted to form a cord (*i.e.* ***a plied yarn*** or ***raw cord***), it will also be treated. Rowan at 2:15 ("[A] one-machine cabled and treated cord unit ('OCT')."). Rowan teaches that once the cord is formed, it has "not [yet] been treated" and thus "remains in a raw state." Rowan at ¶30. The cord then goes through a treatment process via the "treating subunit 328" of Rowan's single apparatus. *Id.*, 4:25-27.

136. In the first step of the treatment process, "the raw cabled cord 334," *i.e.* ***plied yarn***, "is coated with an adhesion agent," *i.e.* ***an adhesive agent solution***. *Id.*, 8:66-9:1. Rowan teaches "Resorcinal Formaldehyde-Latex (RFL)" as an example solution, which is the same solution described in the '663 patent. Ex. 1001, 8:33-35 ("A resorcinol formaldehyde Latex (RFL) solution … can be used as the adhesive agent solution.").

137. Rowan teaches that the raw cord is "coated with an adhesion promoting ***dip***," which a POSITA would understand to mean that the raw cord is dipped into the solution. Rowan at 2:26-27; *see also* 4:46-48 ("As used herein, the terms 'dip' or 'dipping' mean immersion of a … cord … in a processing liquid."); 8:45-49 ("DCU machines yield[] an unexpected capability to combine ***dipping*** and heat treating with the DCU").

(ii) 2[b]: drying the adhesive agent solution-impregnated plied yarn; and

138. In my opinion, Tamura in view of Rowan renders obvious this limitation.

139. Rowan teaches that in the next step of the treatment process, "[a]mbient" air is used to dry the coated raw cord. Rowan at 10:24-28; Table 1 ("Drying Oven"); *see also* 8:17-18 ("The stretch and relax operation, often preceded by a ***drying step***").

(iii) 2[c]: thermally treating the dried plied yarn.

140. In my opinion, Tamura in view of Rowan renders obvious this limitation.

141. Rowan teaches that following the drying step, the cord is "heat[ed]" by a "heating unit" to "cur[e]" the cord, *i.e.* ***thermally treat the dried plied yarn***. Rowan at 9:13-28; *see also* col. 9-10, Table 1 ("Curing Oven"). Rowan states that in a preferred embodiment, "the treating equipment is operated to achieve a temperature of approximately 200° C. for a residence time of approximately 30 seconds or less to ***cure the bonding agent***." *Id.*, 9:21-25.

4. Claim 3

(i) 3[pre]: The method according to claim 2, wherein the dipping, drying and thermal treatment steps are continuously conducted, and

142. In my opinion, Tamura in view of Rowan renders obvious this limitation.

143. Rowan teaches that its apparatus "cables and ***treats*** the cord in a ***continuous process without intermediate take-up***." Rowan at 7:22-24; *see also* 8:57-63 ("It now will be appreciated that by controlling the tension on the cord, via the tensioning devices and the speed of the yarns from the DCU 312, to the treating subunit 328, the cord may be fed directly from the DCU to the treating equipment ***without intermediate take-up***, thus eliminating handling and transport operations between these two process steps.").

(ii) 3[a]: tension applied to the plied yarn in the dipping, drying and thermal treatment steps is 0.4 g/d or less per cord.

144. In my opinion, Tamura in view of Rowan renders obvious this limitation.

145. Rowan teaches that tension is applied at all phases of the treatment process. First, Rowan teaches that its continuous process is achieved by "controlling the ***tension of the cord***, via the ***tensioning devices and the speed of the yarns*** from the DCU 312, to the treating subunit 328." Rowan at 8:57-63. In other words, the initial dipping step occurs as the cord is under tension. Rowan then discloses that "[t]he coated raw cord 334 is pulled through dip tray 340 of the ***heating unit 342*** under controlled tension via a system of tensioning devices 344." *Id.*, 9:4-6. Rowan further teaches that "[t]he desired properties [of treatment] may be achieved without stretching the cord simply by controlling the tension in the cord to allow for a small

heat shrinkage to occur." *Id.*, 8:43-46. In my opinion, these teachings clearly show that tension is applied throughout the treatment process, and a POSITA would further understand that as such. This is supported by Rowan's experiment that measured "the affects of the treating unit tension (stretch or relax) on the key properties of the treated cord." Rowan at 11:30-32.

146. Rowan conducted several experiments with respect to the tension in order to figure out how the "treating unit tension" affected the physical properties of the treated cord. Rowan at 11:29-32. Based on the results of these experiments, Rowan notes that a "4 N[ewton] tension level" is "very practical for a one machine unit OCT design." *Id.*, 12:13-15.

147. Below I explain how to convert Rowan's disclosure of 4 Newtons of tension force into g/d, which refers to grams-force per denier.

148. A POSITA would understand a Newton is a unit measurement for force. By contrast, "g/d" refers to "grams-force per denier," with a "denier" being a unit measurement for linear density. One denier is a gram of mass per 9,000 meters of fiber. In order to convert a value measured in Newtons into g/d, a POSITA would understand that this merely requires converting Newtons into grams-force and then dividing that by the denier of the cord being treated.

149. A "grams-force" is simply the force of Earth's gravity on an object with a mass of one gram. The force of Earth's gravity on an object with one kilogram of

mass is 9.8 Newtons (corresponding to Earth's gravitational force of 9.8 m/s^2). Thus, a POSITA would understand that one Newton of force equals 101.97 grams-force. Thus, Rowan's "4 Newtons" of applied tension is about 408 grams-force.

150. Tamura describes several embodiments of hybrid tire cords with a linear density of 3,070 dt (*i.e.* decitex, grams per 10,000 meters). Tamura at ¶36, Table 1. 3,070 decitex is equivalent to 2,763 denier.

151. So taking the 4 Newtons of tension force disclosed in Rowan, that can be converted to 408 grams-force, and then divided by 2,763 denier for the linear density of the hybrid tire cord, this results in Rowan disclosing a tension force of 0.15 grams-force per denier (g/d) during the treatment process, which is ***less than 0.4 g/d***.

152. In my opinion, it would have been obvious to apply such teachings to Tamura, since Rowan expressly teaches that 4 Newtons of force is a desirable amount of tension to apply to a dip cord during the treatment process. A POSITA would also found it desirable to apply the same amount of tension to the tire cord disclosed in Tamura in order to apply the same treatment process described in Rowan, which as I discussed in the motivation to combine section above, a POSITA would have found beneficial and would reasonably expect to succeed.

B. <u>Ground 2</u>: Fritsch Alone Renders Obvious Claims 1-2

153. I provide a short summary of this ground. As I discussed above, Fritsch discloses adjusting tension of yarns in order that the higher modulus yarn is slightly longer than the lower modulus yarn. But Fritsch also teaches that the higher modulus yarn can be aramid, and the lower modulus yarn can be nylon. Fritsch further teaches using a direct cabling machine to twist the aramid and nylon yarn individually in the same direction, then twisting them together in the opposite direction, all in a single step.

1. Claim 1

(i) 1[pre]: A method of manufacturing a hybrid tire cord comprising:

154. In my opinion, Fritsch discloses this limitation.

155. Fritsch discloses that it "relates to a composite of a plurality of yarns having different properties ***cabled together to form a hybrid cabled cord***." Fritsch at ¶2. Fritsch further discloses that the "hybrid cabled cord may be used in ***tire cord***." *Id.*, Abstract. As I discuss below in limitations 1[a], 1[b], and 1[c], Fritsch discloses a plied yarn made by twisting an aramid primarily twisted yarn and a nylon primarily twisted yarn.

156. As I mentioned above, the '663 patent specification describes a "tire cord" as including either a raw cord or a dip cord. Ex. 1001, 5:20-23. Fritsch's

hybrid cord is a ***raw cord*** because it is formed by twisting two yarns and is therefore untreated at the time it is formed.

> *(ii) 1[a]: a first step of primarily twisting an aramid filament yarn in a first direction to form an aramid primarily twisted yarn;*

157. In my opinion, Fritsch discloses this limitation.

158. Fritsch teaches a "direct cabler" that first performs the step of "the [two] yarns are first twisted individually (for example in the Z direction)," *i.e.* ***twisting in a first direction***. Fritsch at ¶23. A POSITA would understand that the "direct cabler" performs this first step because it is fed two yarns where "both yarns are flat." *Id.* A "flat" yarn is a yarn that has not yet been "subjected to a twisting process." *Id.*, ¶17. In other words, because an aramid flat yarn that has not been twisted has been fed into the direct cabler, the direct cabler must have twisted the flat yarn individually to form a yarn for twisting together with the nylon flat yarn.

159. Fritsch further discloses that the first yarn can be made of "***aramid***." *Id.*, ¶29. And in some of Fritsch's claims, Fritsch recites a "hybrid cabled cord" where one of the two yarns "comprises aramid." *Id.*, cls. 8-9. Since the aramid yarn is fed into the direct cabler as a "flat" yarn, it is an ***aramid filament yarn***. *Id.*, ¶23. Thus, in my opinion, Fritsch discloses ***an aramid primarily twisted yarn*** because it is a flat aramid filament yarn that is twisted in one direction.

> *(iii) 1[b]: a second step of primarily twisting a nylon filament yarn in a second direction to form a nylon primarily*

> *twisted yarn, the second step and the first step being conducted simultaneously; and*

160. In my opinion, Fritsch discloses or renders obvious this limitation.

161. With respect to the limitation ***"a second step of primarily twisting a nylon filament yarn in a second direction to form a nylon primarily twisted yarn,"*** Fritsch teaches a "direct cabler" that first performs the step of "the [two] yarns are first twisted individually (for example in the Z direction)," *i.e.* ***twisting in a second direction***. Fritsch at ¶23. A POSITA would understand that the "direct cabler" performs this first step because it is fed two yarns where "both yarns are flat." *Id.* A "flat" yarn is a yarn that has not yet been "subjected to a twisting process." *Id.*, ¶17.

162. Fritsch further discloses that the first yarn can be "***nylon-6***" or "***nylon-6,6***." *Id.*, ¶29. In particular, Fritsch claims a "hybrid cabled cord" where one of the two yarns "comprises nylon-6" or "nylon-6,6." *Id.*, cls. 8-9. Since the nylon yarn is fed into the direct cabler as a "flat" yarn, it is a ***nylon filament yarn***. *Id.*, ¶23. The flat nylon yarn is then twisted to form ***a nylon primarily twisted yarn*** because it is a nylon filament yarn twisted in one direction.

163. In other words, because a nylon flat yarn that has not been twisted has been fed into the direct cabler, the direct cabler must have twisted the flat yarn individually to form a yarn for twisting together with the aramid flat yarn.

164. With respect to the limitation ***"the second step and the first step being conducted simultaneously,"*** Fritsch discloses that the first and second twisting steps are performed by a "direct cabler," which performs all twisting in "one step," where "the direct cabler is fed with two [flat] yarns, and directly cables them to form cabled cord." Fritsch at ¶23. This "one step" includes "the [two flat] yarns are first twisted individually (for example in the Z direction)," which a POSITA would understand to mean ***simultaneously***.

165. As an alternative argument, it is my opinion that a POSITA would have understood and considered it obvious that Fritsch's "direct cabler" performs the individual twisting of the nylon and aramid yarns ***simultaneously***. This is based on what a POSITA would have understood about "direct cabler" machines at the time of the '663 patent. For example, Fritsch describes that "a typical direct cabler machine" is "manufactured by ICBT." *Id.*, ¶24. A POSITA would have known that an ICBT direct cabler performs the initial twisting of the two yarns simultaneously. This is shown in, for example, Rowan. Rowan teaches the use of an "ICBT direct cable machine." Rowan at 10:22. As I discussed above in Ground 1, liitation 1[b], Rowan teaches that its direct cable machine ***simultaneously*** twists each respective individual yarn into "a twisted single yarn." Rowan at 4:5-14.

(iv) 1[c]: a third step of secondarily twisting the aramid primarily twisted yarn and the nylon primarily twisted yarn in a third direction to form a plied yarn, the third step

> *being conducted continuously with the first and second steps,*

166. In my opinion, Fritsch alone discloses or renders obvious this limitation.

167. With respect to the limitation ***"a third step of secondarily twisting the aramid primarily twisted yarn and the nylon primarily twisted yarn in a third direction to form a plied yarn,"*** Fritsch teaches that after twisting the ***aramid and nylon yarns*** "individually (for example in the Z direction)" to form ***aramid and nylon primarily twisted yarns***, the "twisted yarns are twisted together (for example in the S direction) [*i.e.* ***a third direction***] to form cabled cord" by the "direct cabler." Fritsch at ¶23. This results in a ***plied yarn*** because, as I discussed above, the '663 patent describes a "plied yarn" as "a yarn made by twisting two or more primarily twisted yarns together in one direction," which is exactly what Fritsch is describing.

168. With respect to the limitation ***"the third step being conducted continuously with the first and second steps,"*** Fritsch discloses that a direct cabler "complete[s] the production of cabled cord in ***one step***," including the steps of "first twist[ing] individually" each yarn and then "twist[ing] together" the two yarns "to form cabled cord." Fritsch at ¶23. Fritsch further explains that this is an "advantage[]" of the "direct cabler," where it is "fed with two [flat] yarns, and directly cables them to form cabled cord." *Id.* In my opinion, a POSITA would understand from these disclosures that the ***third twisting step*** which twists together

the nylon and aramid yarns, is conducted ***continuously*** with the first and second twisting steps, since Fritsch describes this happening in "one step." Fritsch at ¶23.

169. As an alternative argument, it is my opinion that a POSITA would have understood and considered it obvious that Fritsch's "direct cabler" performs the individual twisting of the nylon and aramid yarns ***continuously*** with the twisting of the two yarns together. This is based on what a POSITA would have understood about "direct cabler" machines at the time of the '663 patent. For example, Fritsch describes that "a typical direct cabler machine" is "manufactured by ICBT." *Id.*, ¶24. A POSITA would have known that an ICBT direct cabler performs the twisting of the two yarns together continuously with the twisting of the yarns individually. This is shown in, for example, Rowan. Rowan teaches the use of an "ICBT direct cable machine." Rowan at 10:22. As I discussed above in Ground 1, limitation 1[c], Rowan teaches that its direct cable machine performs its twists as a "***continuous*** process." Rowan at 7:61-64, 7:23-24.

(v) 1[d]: wherein the first, second and third steps are conducted by one twister,

170. As I discussed above, Fritsch teaches a single ICBT direct cabler, *i.e.* ***one twister***, that performs all three steps in a continuous process.

(vi) 1[e]: the second direction is the same as the first direction,

171. In my opinion, Fritsch discloses this limitation.

172. As I discussed above for limitations 1[a] and 1[b], Fritsch teaches that the aramid flat yarn (which is then twisted in a ***first direction***) and the nylon flat yarn (which is then twisted in a ***second direction***) are "twisted … in the Z direction," *i.e.* the ***same direction***. Fritsch at ¶23.

> *(vii) 1[f]: tension applied to the nylon filament yarn in the second step is higher than tension applied to the aramid filament yarn in the first step in such an amount that, if the secondary twist of the hybrid tire cord with a predetermined length were untwisted, the aramid primarily twisted yarn would be 1.005 to 1.025 times longer than the nylon primarily twisted yarn.*

173. In my opinion, Fritsch alone discloses or renders obvious this limitation.

174. With respect to the limitation ***"tension applied to the nylon filament yarn in the second step is higher than tension applied to the aramid filament yarn in the first step,"*** Fritsch discloses creating a cord with an "unbalanced configuration" by altering the tension applied to the yarns where one of the cord's yarns is longer than the cord's other yarn. As I explained above, such teachings would have been obvious to combine with Tamura.

175. Specifically, Fritsch is directed to creating a "cabled cord" by twisting two yarns, each of which is "a plurality of continuous fibers." Fritsch at ¶¶14, 16. Fritsch also teaches that the cord can be a "hybrid cabled cord" where the two yarns

have "different properties," because they are, for example, made from different materials. *Id.*, ¶15.

176. Fritsch explains that its novelty is introducing a method for creating a cord with an "unbalanced configuration" which "means that at least two yarns [of the cord] have different lengths." *Id.*, ¶19. Fritsch teaches that an "unbalanced configuration" can be achieved by adjusting the tension controls of the twister that applies tension as the fibers are twisted into yarns. *Id.*, ¶¶24-25. In prior art methods, the tension on the yarns was "balanced," which "effectively means that the two yarns are pulled off with the same rate and thus equal lengths are incorporated into the cabled cord." *Id.*, ¶24. The inventors of Fritsch, however, noted that by changing the "tension on the individual plies," an unbalanced configuration can be achieved. *Id.*, ¶25. In particular, the tension on the yarns can be made unbalanced by "wrapping the two yarns around the butterfly pulley an unequal number of times." *Id.* The "yarn with more wraps," *i.e.* ***has higher tension applied***, will have "increased friction and thus reduced slippage so it is pulled less than the other yarn, and will have ***a lesser length*** in the resulting cabled cord." *Id.*, ¶25.

177. Fritsch further teaches that the yarn with "higher modulus" will have a longer length than the yarn with "lower modulus," and therefore will have less tension applied during twisting. *Id.*, ¶¶20, 25. "Modulus" refers to a material's ability to resist being deformed, and it was well-understood that aramid yarn has a

higher modulus than nylon yarn. Other references like Tamura confirm this, stating that "aramid fibers … are superior in … elastic modulus," whereas "nylon fibers reduces the overall modulus of the composite fiber." Tamura at ¶¶15, 6.

178. With respect to the limitation ***"if the secondary twist of the hybrid tire cord with a predetermined length were untwisted, the aramid primarily twisted yarn would be 1.005 to 1.025 times longer than the nylon primarily twisted yarn,"*** Fritsch teaches that the ratio of the lengths of the yarns is measured using a value called "coring level," which Fritsch discloses can be ***1.005 to 1.025 times longer***. Fritsch at ¶19. The "coring level" is measured by "taking a sample of one meter of cabled cord [*i.e.* ***hybrid tire core with a predetermined length***] and ***untwisting*** the cable in order to separate the two yarns which compose it," following which the two yarns "are then ***untwisted*** by the same number of turns as it took to separate the cable, and in the opposite direction, to yield the two yarns in their as-fed state," *i.e.* ***the hybrid tire cord is untwisted***. Fritsch at ¶19. The "coring level" is calculated as $Coring = (A - B)/B$ "wherein A is the length of the yarn having the higher modulus," *i.e.* ***the aramid primarily twisted yarn***, and "B is the length of the yarn having the lower modulus," *i.e.* ***the nylon primarily twisted yarn***. *Id.*

179. When the higher modulus yarn is ***1.005 to 1.025 times longer*** than the lower modulus yarn, the Coring level is 0.005 to 0.025, or ***0.5% to 2.5%***.

180. Fritsch teaches Coring levels of 0.5% to 2.5% as required by the claims. Fritsch mentions that a "[p]referred" Coring level is a "non-zero" value "no greater than about 25% and no less than about -25%," which includes the claimed range. Fritsch at ¶29.

181. For example, in Table 1, one of the "inventive cords" that was tested had a Coring level of 0.9%. Fritsch at ¶40. I note that this cord had a relatively high Breaking Strength of 184 (second highest among the tested cords) and a relatively high Elongation at Break percentage of 12.8%. *Id.* Fritsch notes that it is desirable to balance the two values, and that is also something a POSITA would have understood very well. *Id.*, ¶41. Such physical properties had the benefit of increased resilience and strength. The desirable breaking strength of this inventive cord is depicted in the below annotated Figure 2, which is a graph of the Coring level of the tested inventive cords against their Breaking Strength.

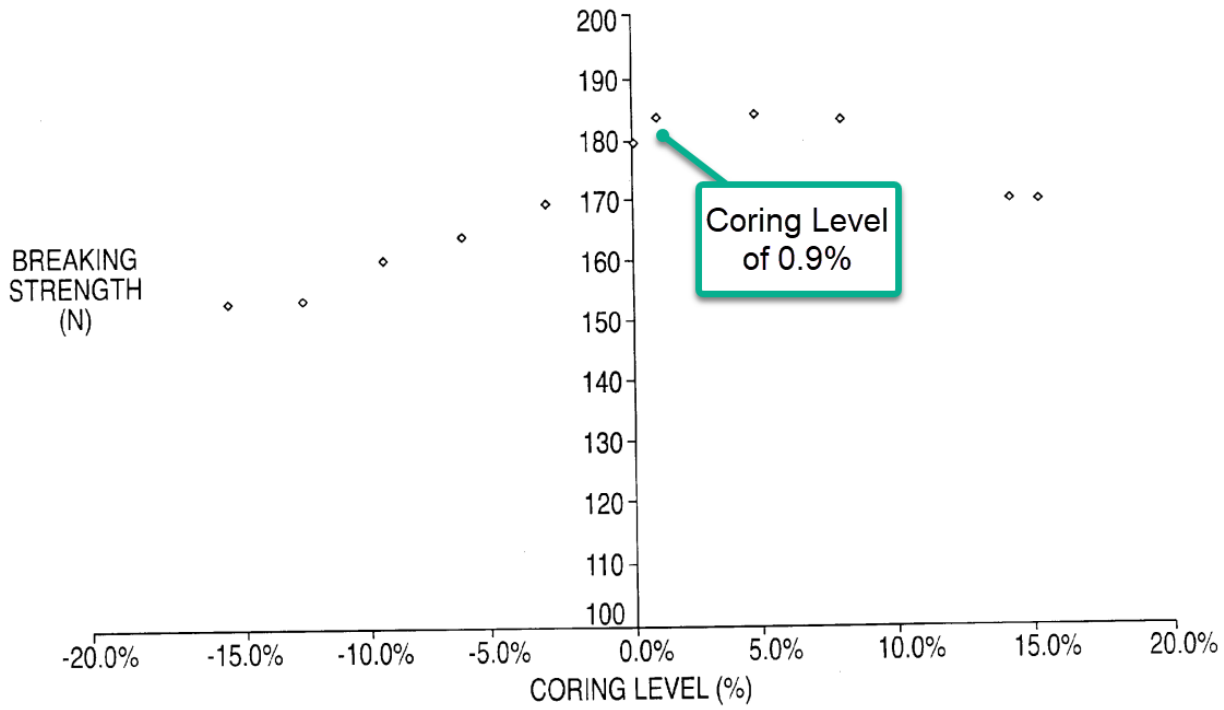

FIG. 2

182. Alternatively, in my opinion, a POSITA would have also considered it obvious to apply Fritsch's teaching of a 0.9% Coring level to the nylon-aramid hybrid cord taught by Fritsch. As I discussed in Ground 1 and above, Fritsch discloses numerous benefits of having a positive Coring level, including a Coring level of 0.9%. *See* Section VII.A.1(iii). For example, a Coring level of 0.9% had a good balance of high Breaking Strength of 184 (second highest among the tested cords) and a relatively high Elongation at Break percentage of 12.8%, as well as other desirable physical properties. Fritsch at ¶40. For all the reasons I discussed in Ground 1, a POSITA would similarly be motivated to apply this teaching to another embodiment in Fritsch.

183. In my opinion, a POSITA would also have a reasonable expectation of success in combining these teachings from the same reference. Fritsch teaches that the Coring level of 0.9% is achievable by altering the tension of the ICBT direct cabling device, which is also used for the aramid-nylon embodiment. Thus, a POSITA would have expected the combination to yield the predictable result of improving the physical properties of Fritsch's aramid-nylon tire cord.

2. Claim 2

(i) 2[pre]/2[a]: The method according to claim 1, further comprising: dipping the plied yarn in an adhesive agent solution;

184. In my opinion, Fritsch discloses or renders obvious this limitation.

185. Fritsch teaches that its "inventive hybrid cabled cords" are "treated to a dip/dry/stretch/dip/relax process." Fritsch at ¶45. Fritsch in particular discloses that the "[s]econd ***dip***" involves dipping the tire cord, *i.e.* ***plied yarn***, into "Resorcinol Formaldehyde Latex type," which is an ***adhesive agent solution***. This is the same adhesive agent solution described in the '663 patent. Ex. 1001, 8:33-35 ("A resorcinol formaldehyde Latex (RFL) solution … can be used as the adhesive agent solution.").

186. To the extent it is necessary to show that it would be obvious to apply Fritsch's treatment process to Fritsch's aramid-nylon cord, it is my opinion that a POSITA would be motivated to do so. A POSITA would have understood that

treating and curing a tire cord is beneficial and conventional when incorporating tire cords into tires for commercial use. I note that Fritsch itself teaches that its treating process is "commonly used in the manufacture of fiber-reinforced tires." Fritsch at ¶58. Thus, Fritsch uses "[t]reated cord samples" are used for "simulating tire curing and embedded in rubber blocks … to simulate the alternative stretch and compression that a cord would undergo in the turn up area of a monopoly passenger tire." Fritsch at ¶37.

187. Fritsch also teaches that its treatment process results in slightly improved physical properties of the tire cord. For example, Fritsch noted a slight increase in the tire cord's "[b]reaking strength" when it had a positive Coring level, as shown below in Table 3.

TABLE 3

			Greige cord		Treated cord	
Inv. Ex.	Comp. Ex.	Cord constituent yarns	Coring level	Breaking strength (N)	Coring level	Breaking strength (N)
	A	PEN/PEN	0	199.2	0	192.5
11		PEN/PET	−13.3%	149.9	−9.7%	140.3
12		PEN/PET	−5.8%	163.15	−4.5%	162.0
	B	PEN/PET	0	180.5	1.5%	176.6
13		PEN/PET	3.3%	182.0	3.8%	182.6
14		PEN/PET	12.4%	172.8	10.8%	179.0
	C	PET/PET	0	177.7	0	182.5

188. For these reasons, in my opinion, a POSITA would have been motivated to use Fritsch's treatment process with other tire cord embodiments described in Fritsch, including the aramid-nylon embodiments.

189. In my opinion, a POSITA would have had a reasonable expectation of success in applying Fritsch's treatment process to its nylon-aramid tire cord embodiment. Fritsch provides detailed instructions for its treatment process, and given that treatment of tire cords was "conventional," it would be well-within the skill of an ordinary artisan to treat nylon-aramid tire cords using the same process described in Fritsch.

(ii) 2[b]: drying the adhesive agent solution-impregnated plied yarn; and

190. In my opinion, Fritsch discloses this limitation.

191. Fritsch teaches that in the next step of the treatment process following the dipping of the cord into RSL, an oven is used for "***drying*** for 45 seconds at 140°C under 24N. Fritsch at ¶50.

(iii) 2[c]: thermally treating the dried plied yarn.

192. In my opinion, Fritsch discloses this limitation.

193. Fritsch teaches that following the drying step, the cord is placed in a different "oven" for "relaxation for 45 seconds at 238°C under 12N." Fritsch at ¶51. Fritsch teaches that following this "relaxation" step, the cord has been "***treated***." *Id.*, ¶45. A POSITA would therefore understand that placing the dipped and dried cord

into an oven at a high temperature of 238° C will ***thermally treat*** the cord. This is consistent with, for example, Rowan's disclosure that placing a dipped cord into an oven of "approximately 200° C. for a residence time of approximately 30 seconds or less" will "***cure the bonding agent***," *i.e.* ***thermally treat the dried cord***. Rowan at 9:21-25.

VIII. CONCLUSION

194. I hereby declare that all statements made of my own knowledge are true and that all statements made on information and belief are believed to be true. I further declare that these statements were made with the knowledge that willful false statements and the like so made are punishable by fine or imprisonment, or both, under Section 1001 of the Title 18 of the United States Code and that such willful false statements may jeopardize the validity of this proceeding.

Executed on this February 27, 2025 by:

Jon Rust, Ph.D.