US 20020149911A1

(19) United States

(12) Patent Application Publication

(10) Pub. No.: US 2002/0149911 A1

(43) Pub. Date: Oct. 17, 2002

Bishop et al.

(54) COOLING SYSTEM FOR ELECTRONIC EQUIPMENT CABINETS

(76) Inventors: **Jerry L. Bishop**, Elkhorn, WI (US); **Clay G. Nesler**, Brookfield, WI (US)

Correspondence Address:
QUARLES & BRADY LLP
411 E. WISCONSIN AVENUE
SUITE 2040
MILWAUKEE, WI 53202-4497 (US)

(21) Appl. No.: 09/833,722

(22) Filed: Apr. 12, 2001

Publication Classification

(51) Int. Cl.[7] H05K 7/20

(52) U.S. Cl. 361/690

(57) ABSTRACT

An apparatus for providing cool air to electronic module cabinets wherein a plurality of electronic modules are stacked within a cabinet such that front surfaces of the modules face a front cabinet opening, the apparatus including a plenum door assembly having an inlet for receiving cooling air and a plurality of outlets, the outlets positioned proximate the front faces of the electronic modules so as to provide cool air thereto, the modules in some embodiments having fans that draw air to back sides of the modules opposite the front surfaces, the plenum openings being adjustable to modify the amount of cooling air being delivered to the modules.

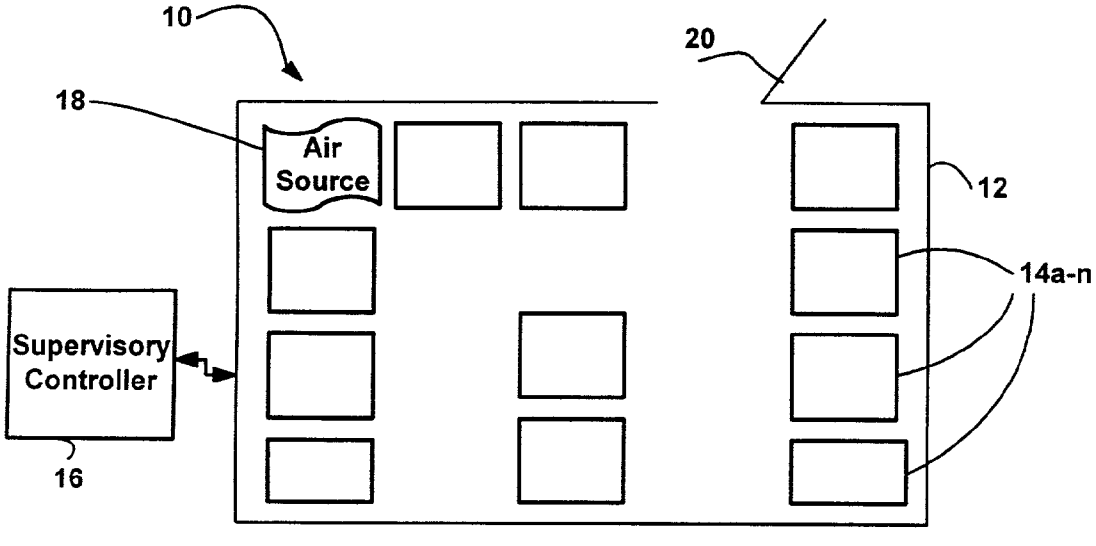

Vertiv Ex. 1006
Vertiv v. Valtrus

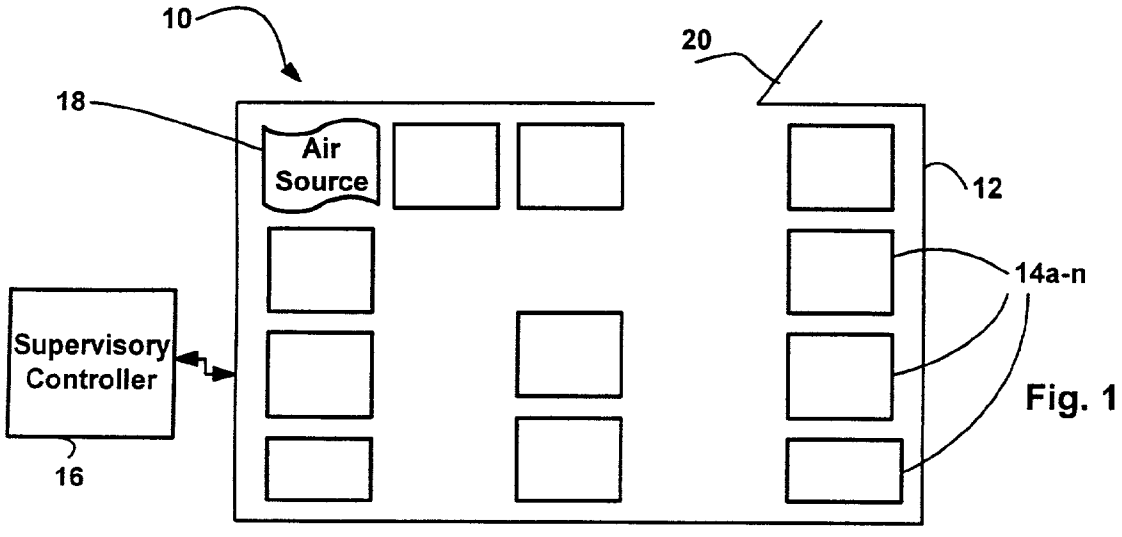

Fig. 1

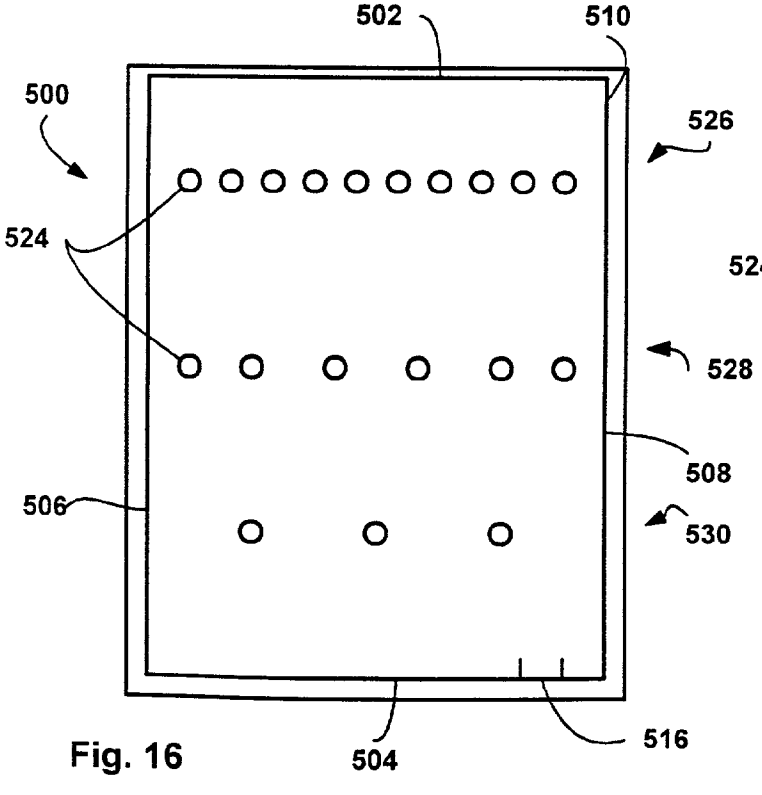

Fig. 16

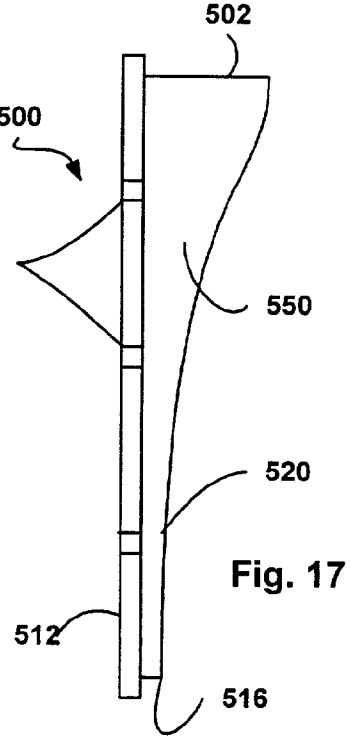

Fig. 17

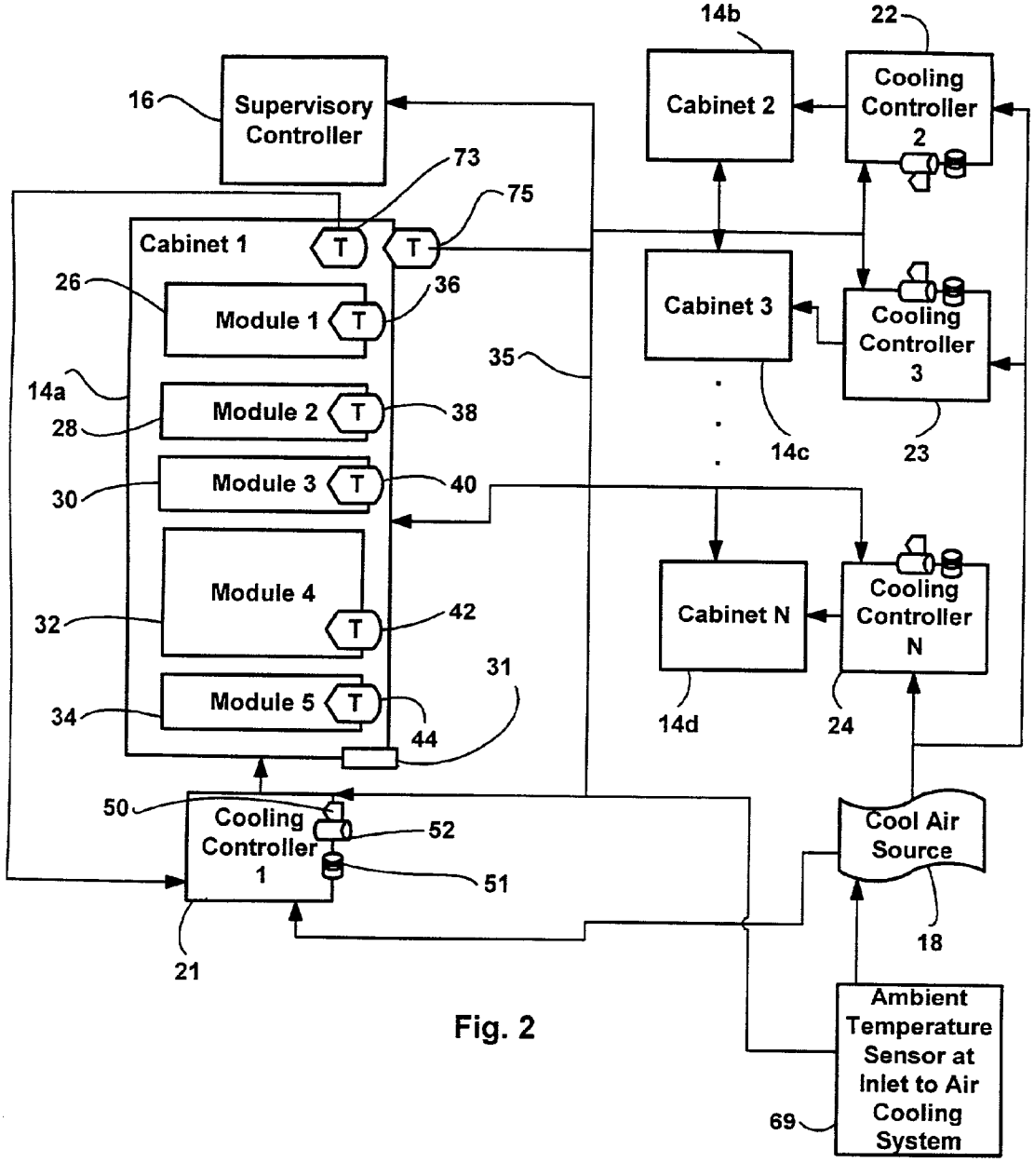
Supervisory Controller
16
Cabinet 1
T
T
73
75
26
Module 1
T
36
14a
28
Module 2
T
38
30
Module 3
T
40
Module 4
T
32
42
Module 5
T
34
44
31
35
Cooling Controller 1
50
52
51
21
14b
Cabinet 2
22
Cooling Controller 2
Cabinet 3
Cooling Controller 3
14c
23
Cabinet N
Cooling Controller N
14d
24
Cool Air Source
18
Ambient Temperature Sensor at Inlet to Air Cooling System
69

Fig. 2

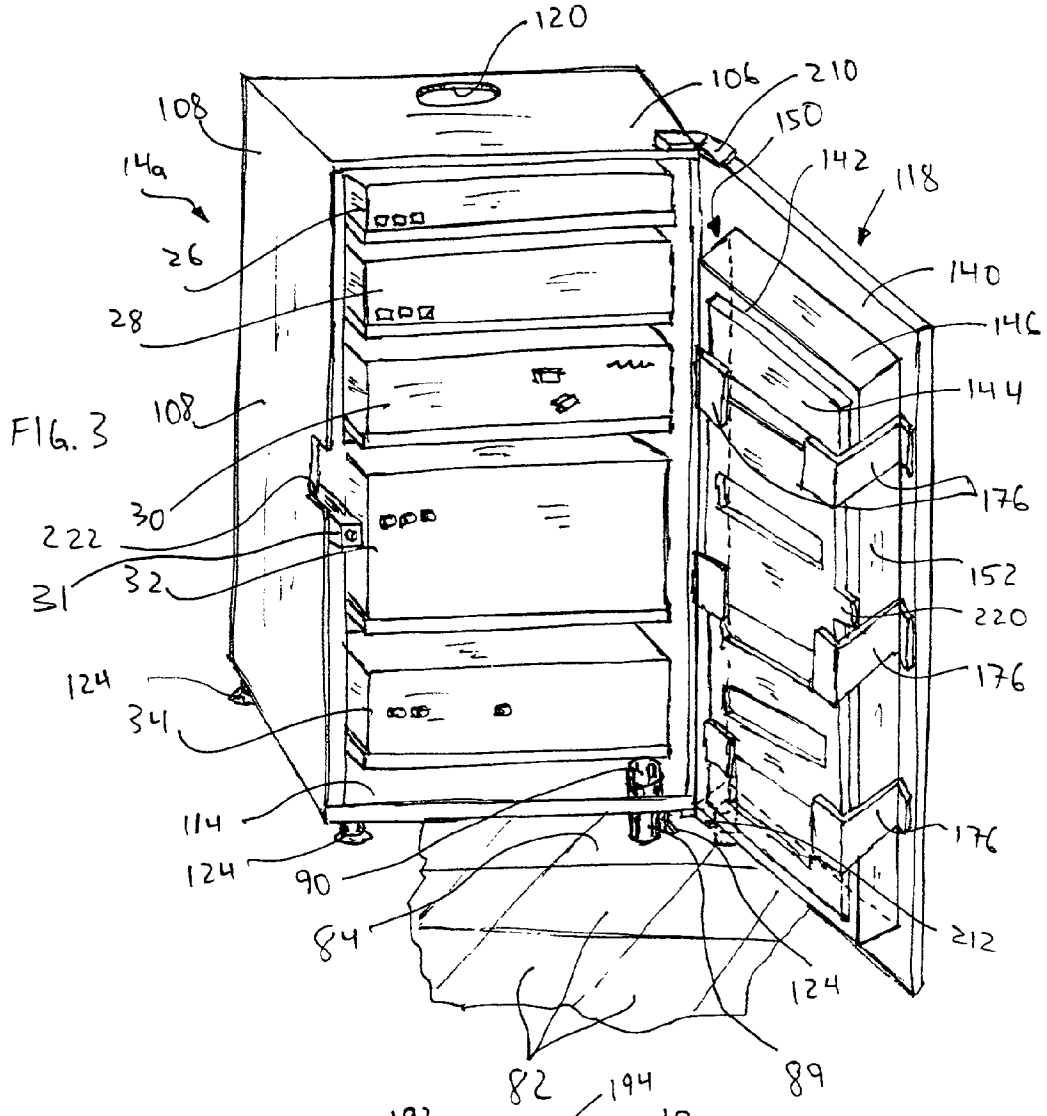
120
106
210
150
142
118
108
14a
26
28
140
146
144
108
30
222
31
32
176
152
220
176
124
34
114
124
90
84
176
212
124
82
89

FIG. 3

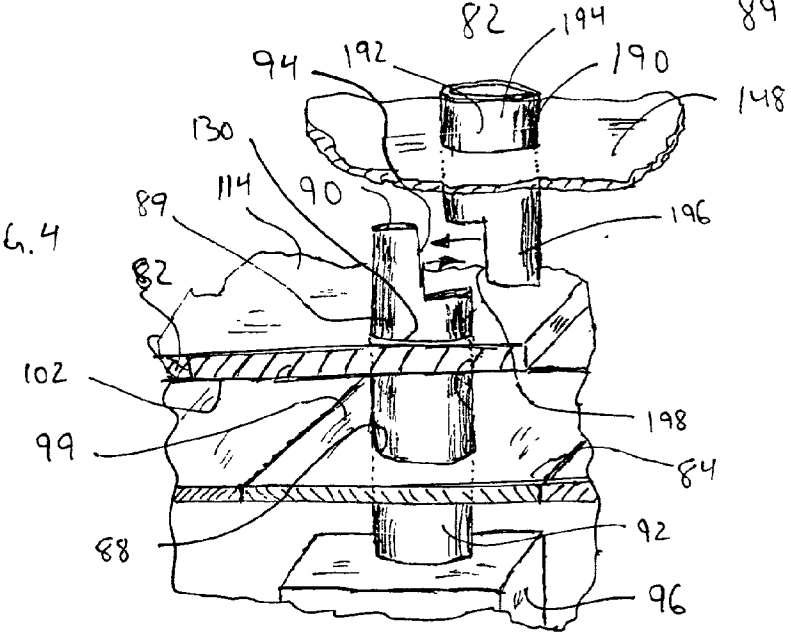
94
192
194
190
148
130
114
90
89
196
82
102
198
99
84
88
92
96

FIG. 4

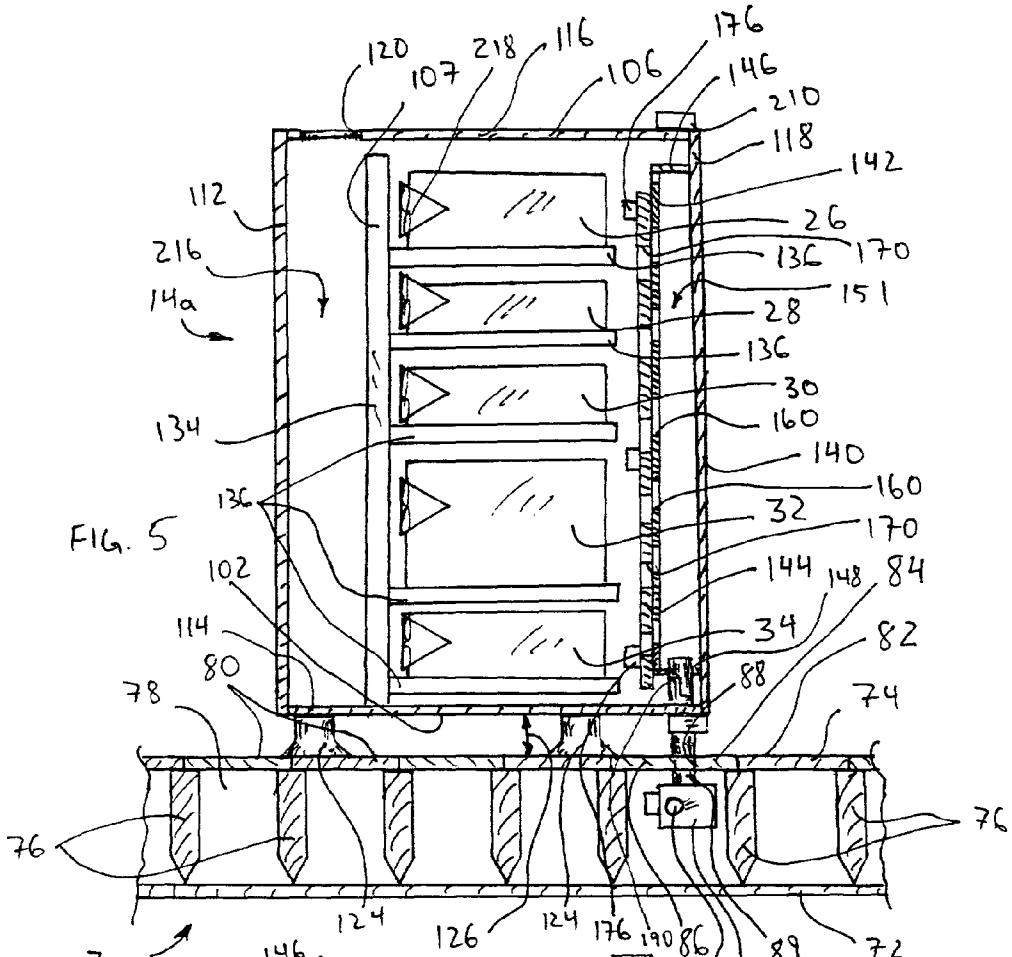
120
107
218
116
106
176
146
210
118
142
112
26
216
136
170
14a
151
28
136
30
134
160
140
160
136
32
170
102
144
148
84
114
34
82
80
88
78
74
76
76
124
126
124
176
190
86
89
72
70
98
21
146
108
26
210
14
28
110
30
32
34
90
212
70
124
89
124
130
92
21
148

FIG. 5

FIG. 6

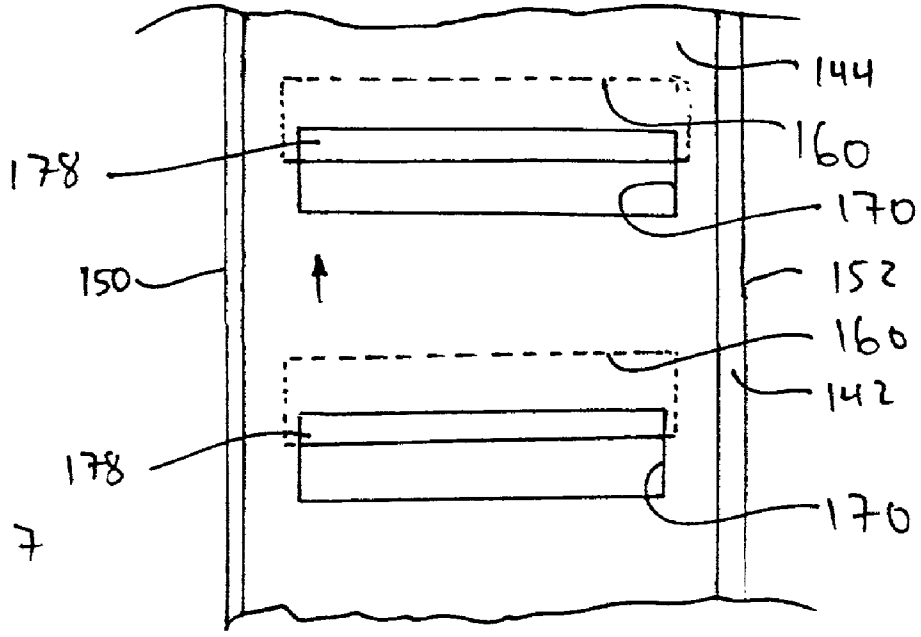
144
160
178
170
150
152
160
142
178
170

FIG. 7

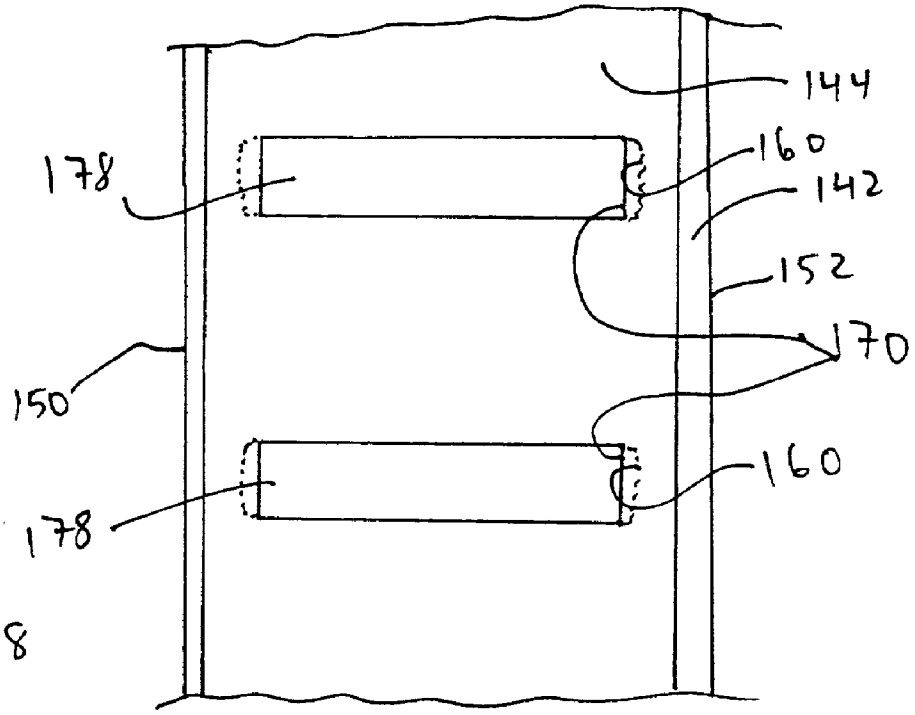
144
160
178
142
152
170
150
160
178

FIG. 8

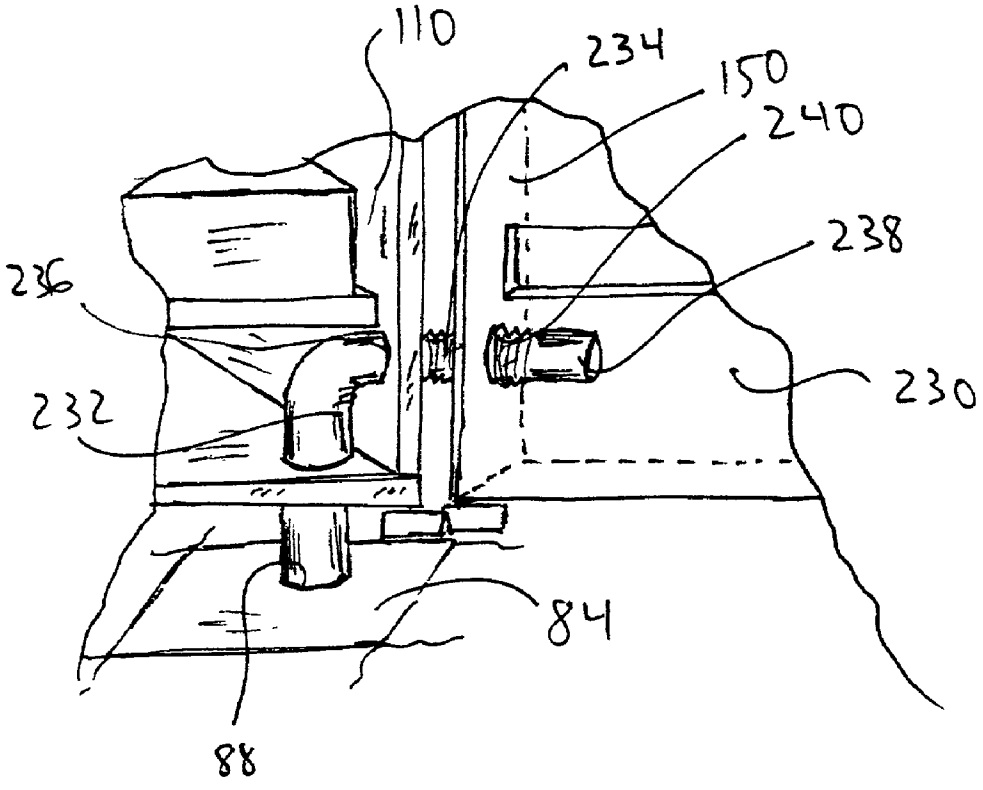

FIG. 9

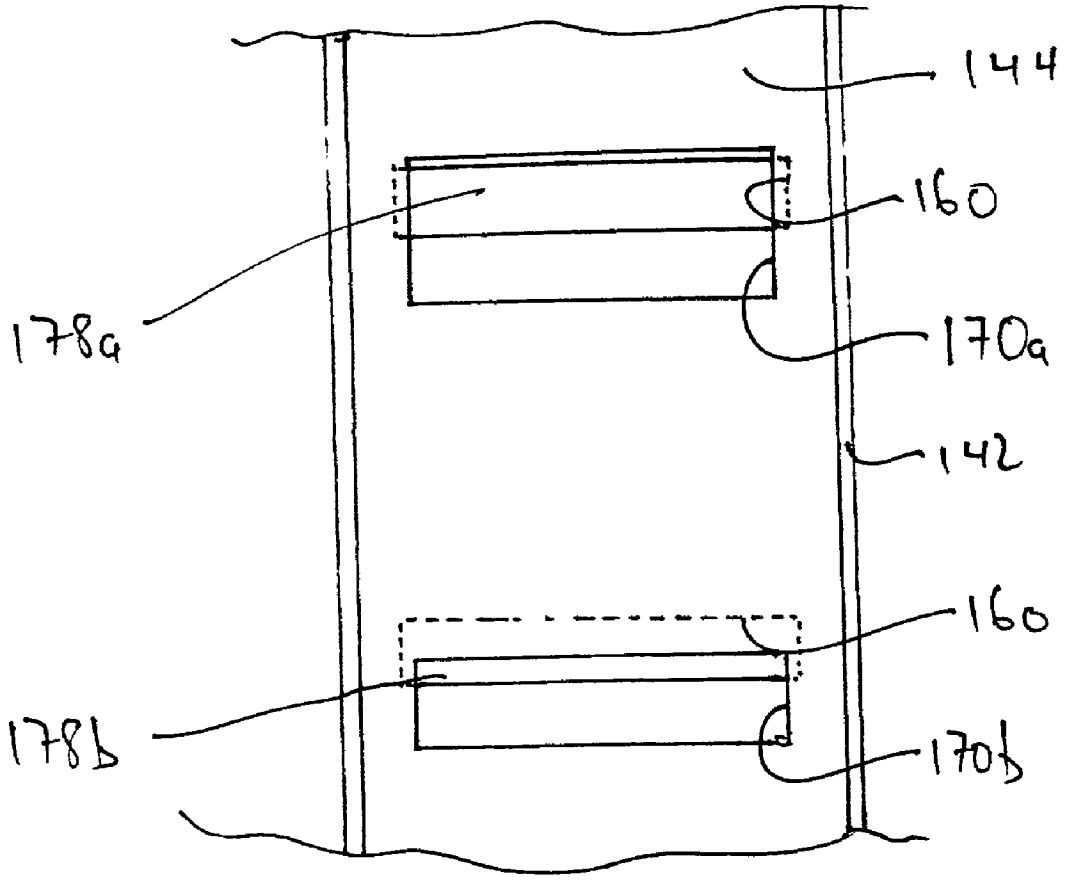

FIG. 10

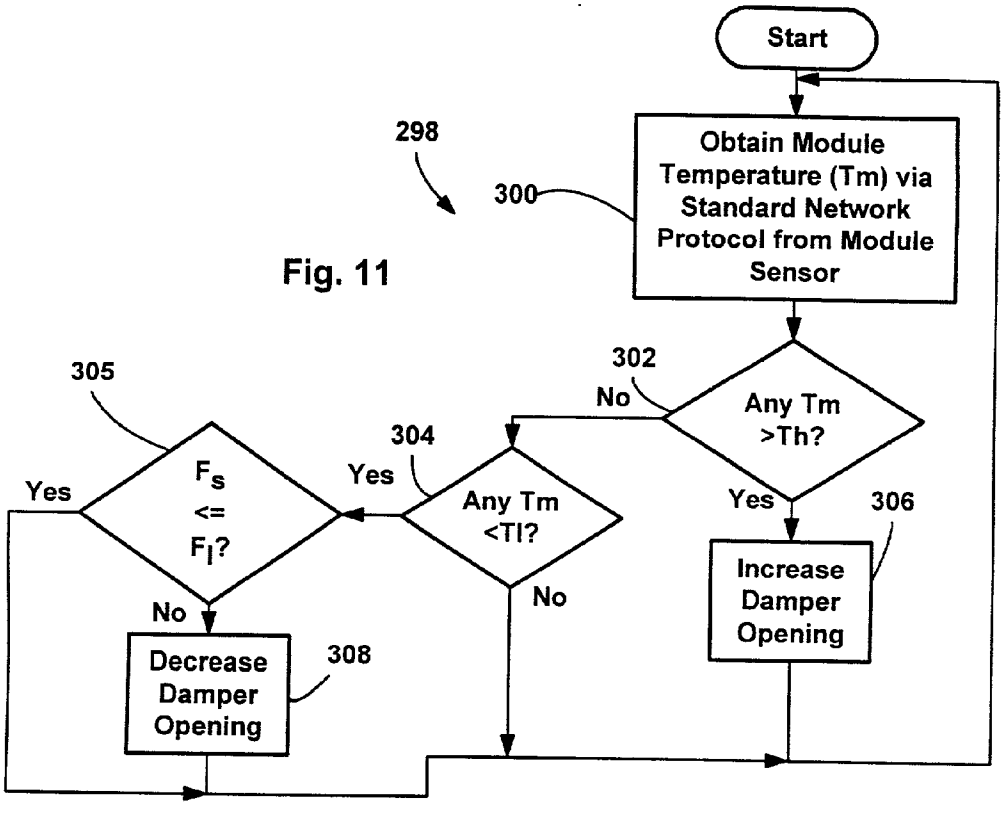
Start
298
300
Obtain Module Temperature (Tm) via Standard Network Protocol from Module Sensor
302
Any Tm >Th?
No
Yes
306
Increase Damper Opening
304
Any Tm <Tl?
Yes
No
305
F_s <= F_l?
Yes
No
308
Decrease Damper Opening

Fig. 11

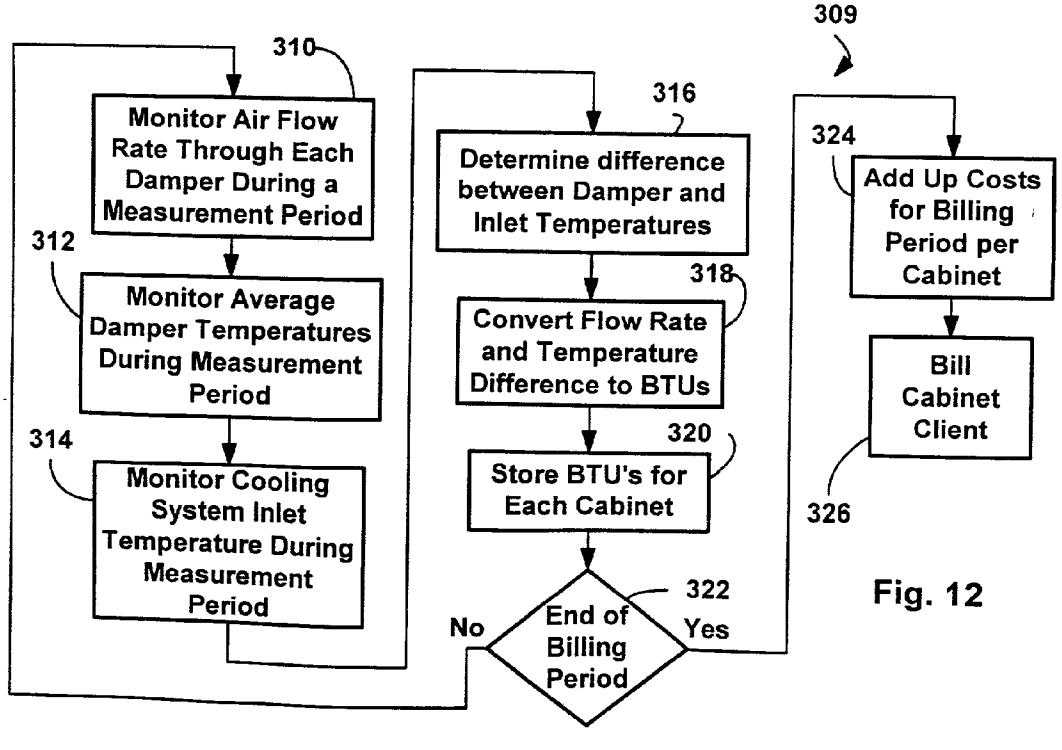
310
Monitor Air Flow Rate Through Each Damper During a Measurement Period
312
Monitor Average Damper Temperatures During Measurement Period
314
Monitor Cooling System Inlet Temperature During Measurement Period
316
Determine difference between Damper and Inlet Temperatures
318
Convert Flow Rate and Temperature Difference to BTUs
320
Store BTU's for Each Cabinet
322
End of Billing Period
No
Yes
309
324
Add Up Costs for Billing Period per Cabinet
Bill Cabinet Client
326

Fig. 12

Fig. 14

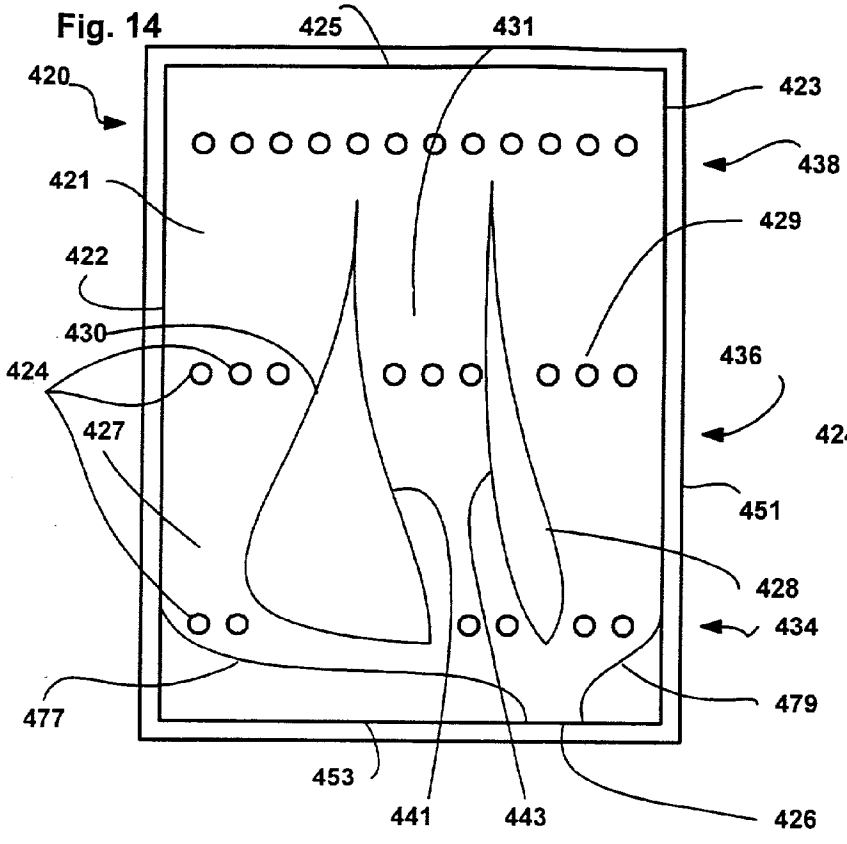

Fig. 15

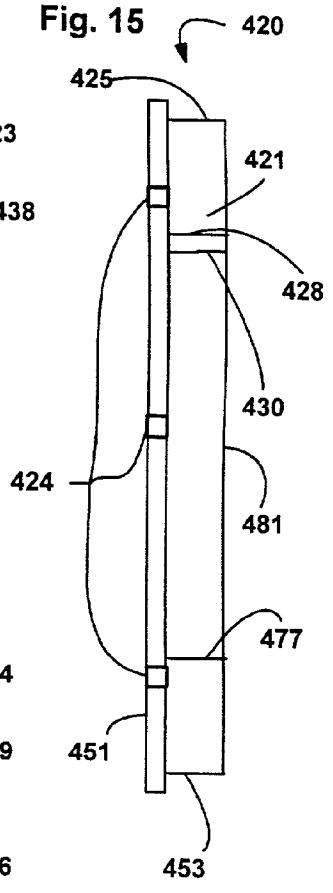

Fig. 13

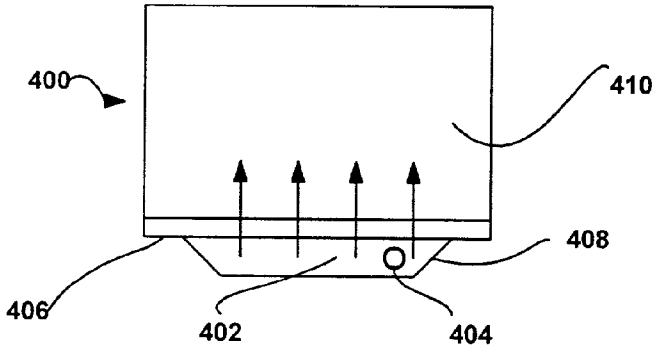

COOLING SYSTEM FOR ELECTRONIC EQUIPMENT CABINETS

CROSS-REFERENCE TO RELATED APPLICATIONS

[0001] Not applicable.

STATEMENT REGARDING FEDERALLY SPONSORED RESEARCH OR DEVELOPMENT

[0002] Not applicable.

BACKGROUND OF THE INVENTION

[0003] The present invention is directed to air cooling systems for electronic equipment and more specifically to a plenum based system for delivering cooing air to an electronic equipment cabinet.

[0004] Over the past several decades the advantages of using computers to perform many different tasks has become clear in almost every industry. Even industries once reluctant to embrace new computing tools have been forced to adopt new business strategies that center on computing abilities. Because of this realization many companies and other entities require massive computing and data storage capabilities to support their employees, efficiently manufacture and sell products and provide services to their customers. In fact, not only do computers help businesses to be efficient, but now, most companies could not function without their computing and database capabilities. In effect, computing and database capabilities have become critical to the operations of many companies and other entities such that any disturbance in those capabilities could result in massive loss of business.

[0005] To provide the massive amount of computing and database capabilities needed, many companies locate racks of computer servers and other electronic modules in special "critical environment" computing and warehousing rooms where information technology personnel can monitor and maintain the server configurations. Hereinafter servers and electronic modules of all types will collectively be referred to as electronic modules in order to simplify this explanation. Each rack typically includes a plurality of vertically arranged (i.e., one support above another) shelving members. Each member is configured to support one or more electronic modules. The shelving members are often vertically adjustable so that the space between members can be modified to accommodate differently sized electronic modules.

[0006] Because technology is advancing quickly, maintaining servers and databases has become extremely expensive. The expense of maintaining and expanding to meet demanding computing capabilities is exacerbated as IT personnel required to maintain and upgrade such capabilities are typically highly skilled. For this reason an entire server/database "hosting" industry (e.g., web hosting) has evolved where industry members maintain massive numbers of servers and other electronic modules and effectively rent out the right to use the modules to customers (i.e., businesses). A similar industry, referred to as "co-location," has also evolved where companies provide conditioned space for their customer's servers, data bases and the like. In both of these industries highly skilled IT personnel can use their expertise to provide services to a huge number of customers thereby spreading costs. In addition, as a customer's computing needs change, the host can accommodate the needs quickly by adding required modules and subletting additional space in the critical environment.

[0007] A cabinet is typically constructed about each rack including top and bottom walls, opposing lateral walls and front and back walls. The front and back walls are often hinged and openable to facilitate access to the modules inside the cabinet. In addition, the front wall is often transparent so that IT personnel can observe the devices inside the cabinet and determine status from various visual displays that may be provided.

[0008] Often the electronic modules placed within a rack will be replaced by other electronic modules to modify capabilities or change other important system operating parameters. For example, with the fast pace of hardware innovation servers are often obsolete after just a couple of years and therefore server swapping is common.

[0009] One problem with virtually all electronic modules, including computers and computer servers, is that, during operation, electronic modules generate heat. If module generated heat is not dissipated quickly enough, the heat can cause the module to malfunction or, when extreme, can destroy the modules.

[0010] The industry has developed several different ways in which to cool electronic modules. For example, in the case of stand alone servers, most servers include one or more fans positioned in a back wall of a server housing. The fans run whenever the server is operating to draw air from the space in front of the server over the heat generating devices inside a module housing.

[0011] In the case of critical environments, module fans alone cannot be relied upon to maintain low temperatures. Specifically, fans alone cannot be relied upon because, in a typical critical environment, there are so many heat generating modules pumping heat into the ambient that the ambient temperature in the critical environment would reach dangerous levels relatively quickly. In effect, the ambient air would not be cool enough to effectively cool the modules. Thus, in the case of critical environments, many cooling schemes call for monitoring and cooling the entire critical environment.

[0012] One common way to cool critical environments has been to raise the floor in the environment so that a space exists below the surface that supports the module cabinets. Then cooling air is pumped through floor tiles into the critical environment. Environment temperature is then monitored at various locations and the cooling air temperature and/or volume is adjusted to maintain the environment at the desired temperature. Ideally the environment temperature throughout the critical environment should be maintained at the same temperature so that if modules are swapped into or out of a cabinet the modules will always be exposed to the same optimal ambient temperature.

[0013] While identical and constant temperatures throughout the critical environment are ideal, unfortunately there are several sources of temperature irregularly in typical critical environments. For instance, in addition to providing cooling air through the raised floor, many critical environments route power and information busses there to conceal the busses

and maintain unobstructed paths within the environment. One problem with placing the busses and other cables below the raised floor is that the cables and buses can block air flow to parts of the critical environment above the raised floor thus causing the ambient temperature in some parts of the critical environment to be different than in others. Cabinets (and electronic modules therein) in the warmer room areas tend to be warmer than cabinets in the cooler areas.

[0014] One other source of temperature irregularity within the critical environment is the disparate amount of heat generated by the different modules and their uses within the separate cabinets. For instance, assuming identical servers, a first cabinet including three servers that operate near full computing capacity generates more heat than a second cabinet including one server that operates at a small fraction of the server's capacity. In this case, all other things being equal, the air temperature near the first cabinet (and inside the first cabinet for that matter) would be warmer than the air temperature near the second cabinet.

[0015] Thus, despite efforts to maintain the same conditions throughout a critical environment, often the temperatures within different areas of the critical environment will vary and this variance can result in module failure or pre-mature degradation in performance.

[0016] One solution to the critical environment temperature disparity problem is to increase the temperature of the cooling air forced into the critical environment so that even the warmest area within the room is cool enough to minimize or avoid module failure. Unfortunately, IT personnel are routinely inside the critical environment during system operations to monitor and work on modules and therefore this solution is often unworkable.

[0017] Another solution to the critical environment temperature disparity problem has been to identify temperatures throughout a critical environment at relatively small spatial intervals and then adjust air flow through baffled raised floor tiles within the environment to even out environment temperature. A manual procedure to accomplish this task has required an environment administrator using an air temperature sensor to place the sensor at many equispaced locations within a critical environment and at a specific height (e.g., 2 feet) above the floor surface and take a plurality of temperature readings. The readings are then fed into a computer that generates a three dimensional map of temperature in the environment as a function of location within the environment. Where "hot spots" occur the administrator then adjusts tile baffles. Thereafter the administrator again collects temperature readings throughout the environment and causes the computer to generate the map to see the results. In the alternative, instead of adjusting baffle settings, the administrator may actually have cables/buses under the raised floor rerouted where air paths are essentially blocked so that static pressure under the raised floor is more even. Clearly, this solution is extremely labor intensive and thus costly. In addition, ideally, this solution should be repeated each time the cable/bus configuration or the modules in the critical environment are modified as any change in environment configuration can alter air flow and hence temperature patterns.

[0018] Yet one other solution to the critical environment temperature disparity problem is to, in addition to cooling the ambient, provide cabinet monitoring equipment including temperature sensors inside cabinet housings that are linked to a processor. The processor can then monitor temperature in the cabinets and generate an alarm when the temperature inside any given cabinet exceeds some threshold level. In this way IT personnel are alerted when the temperature within a cabinet is dangerously high and can take steps to remedy the problem.

[0019] While the above solutions are advantageous they have some shortcomings. First, there is some loss of cooling capability prior to cooling the devices simply because cool air from the floor is released into the large critical environment.

[0020] Second, module cooling is relatively inefficient. Clearly colder cooling air facilitates more efficient cooling. In the case of ambient cooling, the air drawn over the electronic modules includes the cooling air from within the raised floor mixed with the warm exhaust air form the cabinets within the critical environment. Thus, while the air supplied to the critical environment is cold, the cooling air is relatively warm and hence the cooling function is inefficient.

[0021] Third, ambient cooling systems cannot be adjusted to increase or decrease the amount of cooling air provided to each cabinet as a function of immediate requirement. For example, at a first time all modules within a cabinet may be operating near full capacity while at a second time the modules may be operating at a small fraction of total capacity. When at full capacity, generated heat will be much greater than when at the fraction of total capacity and hence the optimal amount of cooling air to be delivered will change over time. Ambient cooling systems cannot accommodate such optimal requirements.

[0022] One attempt to address the problems with ambient cooling systems is described in U.S. Pat. No. 5,216,579 (the '579 patent) entitled "Rack Based Packaging System for Computers with Cable, Cooling and Power Management Module" that issued on Jun. 1, 1993. The '579 patent teaches a system including a power plenum, a cooling plenum and a cable plenum. The plenums are arranged adjacent each other to form a plenum construct and the construct is attached to a side or lateral wall of an electronic module cabinet such that each plenum extends along the entire vertical length of the cabinet. The plenums are positioned in logical locations with respect to each other and with respect to the configuration of the modules within the cabinet. For example, in one embodiment the power plenum is provided adjacent the back side of the cabinet and includes power outlets, the cable plenum is positioned adjacent a front side of the cabinet and provides space for data buses and the like while the cooling plenum is positioned between the other two plenums. This configuration makes sense as the electronic modules typically link to power from a rear module face while the data buses are often linked to connectors positioned on the front surfaces of the modules.

[0023] In another configuration the '579 patent teaches that the cooling plenum may be positioned on the side of the cabinet adjacent the front cabinet wall. The '579 patent teaches that this configuration is advantageous as the cooling air is delivered closer to the front of the servers as opposed to a side.

[0024] The cooling plenum channels cooling air directly from a raised floor up along the side of the cabinet. The

cabinet includes a plurality of openings that are aligned with openings in the cooling plenum. Air pumped into the cooling plenum therefore is delivered to different parts of the cabinet to cool modules therein. Exhaust air is then directed into the ambient by fans in the back walls of server housings.

[0025] The '579 solution delivers cooling air directly to the electronic module cabinets and therefore is much more efficient than the ambient cooling concepts described above. Nevertheless, the '579 patent also has several shortcomings. First, to provide the best cooling pattern an air plenum should provide air along each of the front faces of the modules in the cabinet with the fans drawing the air through the servers and out to the exhaust ports. The '579 solution provides cooing air to only one side of the cabinet. This is true even in the case where the cooling plenum is adjacent the front cabinet wall. Thus, despite recognizing that it is important to deliver cooling air to the front of each module, the '579 patent fails to teach an optimal design that performed this function evenly across the front faces of the modules.

[0026] Second, the '579 plenum cannot be adjusted to modify air distribution along the length of the plenum. This is in part due to the fact that the '579 plenum has to be designed to provide air at the openings in the cabinet which typically are not adjustable. The ability to adjust air distribution along the length of the plenum is particularly important for efficient cooling as the equipment within a cabinet may be changed often and the relative positions within the cabinets of heat generating components and air flows may be modified periodically. In this regard, in a first cabinet primary heat generating components may be positioned in the cabinet bottom while in a second cabinet the primary heat generating components may be positioned in the top of the cabinet. Here, even distribution of cooling air along the entire cabinet length would not be efficient.

[0027] In addition, even where component configurations are not changed, throughout the course of a day certain electronic modules will often generate appreciably different amounts of heat such that the cooling air requirements will fluctuate throughout the day.

[0028] Third, the '579 plenum air delivery system is completely static. That is, the delivery system cannot automatically determine when the temperature within a cabinet is at a dangerous level and cannot automatically alter the air delivery function to address the dangerous levels. For instance, assume that cables within the space below a raised floor impede the air path to several plenum inlets in one part of a critical environment. In this case the '579 solution would not recognize that a problem exists and thus the electronic modules inside the cabinet would not receive sufficient cooling air. In systems including cabinet temperature sensors the sensors would indicate the temperature problem and IT personnel could then address the matter. However, this solution is relatively inefficient and, in some cases, can lead to system shut down if IT personnel do not respond in a timely fashion.

[0029] U.S. Pat. No. 6,188,189 (the '189 patent) that issued on Feb. 13, 2001 and that is entitled "Fan Speed Control System" teaches one system that automatically alters cooling air volume as a function of cabinet temperature. To this end, the '189 patent teaches that dedicated temperature sensors can be positioned at various locations within a cabinet. The sensors are monitored and fan speeds are altered as a function of cabinet temperature. Other systems regulate cooling in other fashions (e.g., via damper control or cooling air temperature). While the '189 solution advantageously provides automated control of cooling air volume, this solution to the temperature control problems is relatively expensive requiring a plurality of dedicated temperature sensors.

[0030] One other problem with a fan speed controlling system like that taught in the '189 patent is that the space from which the fan attempts to draw air could be blocked so that the fan, in fact, draws little air and the cooling effect is minimal. For example, as in the '579 patent, where the air is drawn from below a raised floor, as indicated above, cables buses below the floor could obstruct air flow such that even the air flow caused by a high speed fan would be minimal.

[0031] In the case of co-location companies and web-hosting companies, yet another problem with the above described systems is that the companies have no accurate way of determining how to attribute cooling costs to separate customers. The cooling costs are simply chalked up as overhead and split in some relatively arbitrary fashion among customers. For instance, one way to attribute costs to customers is by square footage of a facility required to house a customer's servers or servers rented by the customer. This solution may require a customer to pay far more than the customer's share of cooling costs. For example, assume a first customer's cabinets require 50% of the total square footage of a critical environment but that the customers modules are essentially fully utilized so that the customer's modules require 80% of the cooling that occurs during a particular month. While it would be equitable to charge the first customer for 80% of the total cooling costs, an arbitrary square foot billing system would undercharge the first customer by 30% of the total cooling costs.

[0032] Thus, there is a need for a more efficient cool air delivery system for use in critical environments. In addition, there is a need for an air delivery system that can automatically alter air volume to module cabinets based on cabinet and/or component temperature. Moreover, there is a need for a system that automatically tracks critical environment temperatures throughout a data center environment and provides information regarding the same. Furthermore, there is a need for a system whereby cooling costs can be equitably allocated to various customers.

BRIEF SUMMARY OF THE INVENTION

[0033] It has been recognized that a plenum or other form of air delivery member can be constructed on the inside of an electronic module cabinet door that can deliver cool air extremely efficiently to modules inside the cabinet to increase cooling efficiency. In some embodiments the plenum includes the cabinet door while in others the plenum is a retrofit assembly that can be added to an existing door to provide the cooling air. In several embodiments cool air is pumped directly into the plenum via a conduit member that extends from a cooling air source below the cabinet.

[0034] In general terms, the present invention includes an apparatus for use with a frame defining a front, a back and first and second sides extending from the frame front to the frame back for supporting and mounting at least one elec-

tronic module, the module including a front wall and a back wall, the front wall forming at least one inlet and the back wall forming at least one outlet, the apparatus for delivering air to the at least one module and comprising at least one plenum mounted to the first side and defining a passageway adjacent the front side of the frame, the plenum including at least one opening facing the first side and a cooling air source linked to the plenum to provide cooling-air to the plenum.

[0035] In some applications the plenum includes a door member and at least one wall member spaced from the door member so as to form the passageway, the door member having an edge and being hingedly linked to the frame along the edge for rotation about the edge between a closed position where the plenum is adjacent the first side and an open position where the plenum is extended from the first side. Also, the plenum may further include first and second plenum lateral walls and an end wall, the lateral walls opposing each other and traversing the distance between the door member and the wall member and the end wall traversing the distance between the lateral wall members opposite the air source.

[0036] In several embodiments the apparatus further includes a first mating member linked to the air source and a second mating member linked to the plenum and positioned proximate the first mating member when the door member is closed, the first and second mating members configured such that one of the mating members receives the other mating member when the door member is closed and the mating members together form a passage from the air source to the plenum. The air source may be positioned below the door member and the second mating member may extend upward below the door member when the door member is in the closed position. In a preferred embodiment the second mating member extends upward below the hinge.

[0037] In some embodiments the apparatus includes a conduit member positioned proximate the hinged edge of the door connecting the air source to the plenum.

[0038] In some embodiments the plenum is formed at least in part of a transparent material. The transparent material may be Plexiglass. The plenum may further include a baffle member mounted adjacent the opening for movement with respect thereto, the baffle member movable with respect to the opening such that the baffle member blocks different portions of the opening. The plenum may form a plurality of openings and the baffle member may be moveable with respect to the plurality of openings to block varying portions of the openings.

[0039] The invention also includes a cooling assembly for cooling at least one electronic module, the module including a front wall and a back wall, the front wall forming at least one inlet and the back wall forming at least one outlet, the front wall also forming a front surface. In this case the assembly includes a frame defining a front side, a back side and first and second sides that separate frame front and back sides, a rack mounted inside the frame including an upright member and at least one essentially horizontal shelf member, the module positionable on the shelf member such that the front surface faces the front side, at least one air delivery member forming at least one opening, the delivery member mounted to the frame such that the opening faces the front surface and a cooling air source linked to the delivery member to deliver cooling air to the delivery member.

[0040] Here the assembly may further include first and second lateral wall members that essentially close the first and second sides of the frame, respectively. The assembly may also include a back wall member that essentially closes the back side of the frame. In some embodiments the frame further defines top and bottom sides and further includes top and bottom wall members that essentially close the top and sides, respectively. The top wall may form at least one outlet proximate the-back wall member. When in a closed position, the delivery member may block the front side of the frame.

[0041] In some applications the delivery member is hingedly mounted to the frame for movement between the closed position and an open position where the first side is unobstructed. The size of the opening formed by the delivery member may be adjustable.

[0042] The invention further includes a cooling assembly comprising an electronic module including a front wall and a back wall, the front wall forming at least one inlet and the back wall forming at least one outlet, the front wall also forming a front surface, the module including at least one operating parameter sensor, linked to a data bus and capable of communicating status of the at least one operating parameter via a standard network protocol, at least one air delivery member forming at least one opening, the delivery member mounted adjacent the module such that the opening faces the front surface, a damper linked to the air delivery member and linked to the data bus, a cooling air source linked to the damper and a processor linked to the bus for receiving the status communication and for controlling the damper as a function of the status communication. One standard protocol is SNMP although other standard protocols are contemplated.

[0043] The invention, moreover, includes an apparatus for cooling at least one electronic module inside a module cabinet, the cabinet including a door, the apparatus comprising a cooling air source linked to the cabinet, a sensor for sensing the status of the door and a controller for controlling the amount of air provided to the cabinet via the cooling air source, the controller linked to the sensor and programmed to modify the cooling air volume delivered to the cabinet as a function of the door status. Here, the controller may reduce the air delivered to the cabinet when the door is opened. In fact, in some applications the controller blocks air delivery to the cabinet when the door is opened.

[0044] These and other objects, advantages and aspects of the invention will become apparent from the following description. In the description, reference is made to the accompanying drawings which form a part hereof, and in which there is shown a preferred embodiment of the invention. Such embodiment does not necessarily represent the full scope of the invention and reference is made therefore, to the claims herein for interpreting the scope of the invention.

BRIEF DESCRIPTION OF THE SEVERAL VIEWS OF THE DRAWINGS

[0045] **FIG. 1** is a schematic view of a critical environment in which the present invention is employed;

[0046] **FIG. 2** is a schematic diagram illustrating many of the components of **FIG. 1**, albeit with additional detail;

[0047] **FIG. 3** is a perspective view of a cabinet assembly according to the present invention;

[0048] **FIG. 4** is a perspective partial cross-sectional view of a cool air conduit assembly illustrated in **FIG. 3**;

[0049] **FIG. 5** is a partial cross-sectional view of the assembly of **FIG. 3**, albeit with the plenum door assembly in a closed position;

[0050] **FIG. 6** is a front plan view of the assembly of **FIG. 3**, albeit with the door assembly in a closed position;

[0051] **FIG. 7** is schematic view of the baffle assembly of **FIG. 3**;

[0052] **FIG. 8** is similar to **FIG. 7**, albeit with the baffle assembly in a different relative position with respect to other plenum door assembly components;

[0053] **FIG. 9** is a perspective view a second cool air tube passageway assembly;

[0054] **FIG. 10** is a view similar to **FIG. 7**, albeit illustrating a plenum having a different baffle design;

[0055] **FIG. 11** is a flow chart illustrating a method whereby a server used temperatures from internal module temperature sensors to control a damper;

[0056] **FIG. 12** is a flow chart illustrating a method whereby a critical environment server determines, on a cabinet by cabinet basis, the energy used to cool the modules therein and generates a bill automatically;

[0057] **FIG. 13** is a top plan schematic view of a cabinet including a plenum attached to the exterior of the cabinet door;

[0058] **FIG. 14** is a front plant view of a plenum design including several air paths through the plenum;

[0059] **FIG. 15** is a side elevational view of the assembly of **FIG. 14**;

[0060] **FIG. 16** is similar to **FIG. 14**, albeit illustrating another embodiment; and

[0061] **FIG. 17** is similar to **FIG. 15**, albeit illustrating the embodiment of **FIG. 16**.

DETAILED DESCRIPTION OF THE INVENTION

[0062] Referring now to the figures where like reference numerals correspond to similar elements throughout the several views and, specifically, referring to **FIG. 1**, the present invention will be described in the context of an exemplary critical environment room **10** (hereinafter a critical environment) including four insulated walls **12** and an insulated door **20** that define an environment space. Within environment **10** a plurality of electronic module cabinet assemblies **14***a-n* are arranged in a spaced format so that footpaths allow an environment administrator to access each one of the cabinet assemblies **14***a-n*. An air source **18** is located inside environment **10** and provides cooling air to environment **10** in a manner which will be described in more detail below. In addition, a supervising controller **16** is located outside environment **10** but links to various components within environment **10** via one or more data buses that enable supervising controller **16** to monitor and control environment characteristics.

[0063] Referring now to **FIGS. 1, 5** and **6**, the floor **70** within environment **10** includes a bottom support member or assembly **72** and a top support assembly **74** that are separated by beam members **76** to form a gap or space **78** therebetween. The cooling air source **18** provides cool air within space **78**. Support assembly **74** includes a plurality of support tiles collectively referred to by numeral **80**, each tile **80** spanning the distance between two adjacent support beams **76** such that together the tiles **80** form a support surface **82** for supporting cabinet assemblies **14** thereabove.

[0064] Some of the tiles are special in that they include control mechanisms for controlling movement of cool air from within space **78** to locations thereabove in environment **10**. Specifically, according to the present invention, special control tiles (e.g., **84**) are provided to facilitate delivery of cool air from space **78** directly into cabinet assemblies (e.g., **14***a*) thereabove. Referring also to **FIGS. 3 and 4**, tile **84** includes a tile member **86** similar to the tiles **80** except that member **86** forms a circular opening **88**. In addition to member **86**, tile **84** also includes a first mating member or conduit member **89** having an upper end **90** and a lower end **92**. Upper end **90** forms a semicircular cut-out **94** best seen in **FIG. 4**. Tube **89** is sized so as to fit snuggly within aperture **88** and, to secure tube **89** within aperture **88**, other mechanical components not illustrated may be used.

[0065] Referring still to **FIGS. 4, 5** and **6** and also to **FIG. 2**, in addition to member **86** and member **89**, control tile **84** also includes a cooling controller unit **21** that is attached to lower end **92** of tube **89**. Cooling controller **2196** is sized so that it fits between adjacent members **76** below assembly **74** and is positioned such that an opening **98** is unobstructed by any of members **76**. The top end **90** of tube **89** extends up above a top surface **99** of tile **84** and into a cabinet **14***a* as explained in more detail below. Controller **21** includes a damper and a processor (not separately illustrated), the processor programmable to perform any of several different functions to control the damper.

[0066] Referring still to **FIG. 2**, for the purposes of the present invention it is assumed that each of cabinet assemblies **14***a* through **14***n* and their corresponding controllers (e.g., controller **21, 22, 23**, and **24**) are essentially identical and therefore only cabinet **14***a* and its corresponding controller **21** will be described here in any detail. In one embodiment controller **21** is equipped with an air temperature sensor **52**, a static pressure sensor **50** and a flow rate sensor **51**. Referring also to **FIGS. 4 and 5**, the pressure sensor **50** senses the static pressure within space **78** below support assembly **74** (see also **FIG. 5**) at the location of controller **21**. Flow sensor **51** measures the rate of air flow through the damper in controller **21**. Supervising controller **16** is linked via a data bus to each of the cooling controllers as illustrated so that supervising controller **16** can retrieve temperature, pressure and flow rate information corresponding to each damper location below the critical environment **10** for various purposes described below, can provide information to each controller and can, in at least some embodiments, control each of the controllers.

[0067] Referring to **FIGS. 2, 3, 5** and **6**, cabinet assembly **14***a* includes a housing **106**, a shelving unit **107**, five electronic modules **26, 28, 30, 32** and **34**, an internal temperature sensor **73** and an external temperature sensor **77**. Housing **106** includes opposing lateral walls **108** and **110**, a back wall **112** which traverses the distance between the two lateral walls **108** and **110**, a bottom wall **114**, a top

wall **116** and plenum door assembly **118**. Lateral walls **108** and **110**, back wall **112**, bottom wall **114** and top wall **116** may be formed of various materials such as reinforced sheets of steel, plastic or the like, although not illustrated, vent openings may be provided in any of these walls to allow venting of heat to the ambient.

[**0068**] Top wall **106** forms venting outlet **120** near the back end of assembly **14***a* opposite door assembly **118**. Outlet **120** may be larger than illustrated or may comprise several outlets. In addition, although not illustrated, a fan may be provided within outlet **120** to draw warm air out of housing **106**.

[**0069**] A plurality of foot members collectively referred to by numeral **124** extend from the bottom surface **102** of bottom wall **114** to support housing **106** thereabove and define a space **126** between surface **92** and undersurface **102** (see **FIG. 5**). In addition, bottom wall **114** forms an opening **130** similar to opening **88** in tile **84**. Opening **130** is formed proximate the edge of wall **114** that is adjacent door assembly **118** when the door assembly **118** is closed. In fact, opening **130** is below a plenum defined by assembly **118** when assembly **118** is in a closed position.

[**0070**] As illustrated, in some embodiments conduit member **89** extends up and through opening **130** into housing **106** so that cutout section **94** is above bottom wall **114**. Member **89** is positioned so that cutout section **94** faces the side of housing **106** that is closable via door assembly **118**.

[**0071**] Referring now to **FIGS. 3, 5, 6, 7** and **8**, door assembly **118** includes a flat stiff planar member **140** which serves dual functions including closing a front side of housing **106** and forming a plenum wall to help direct cool air within housing **106**. In addition to member **140**, assembly **118** also includes other components that cooperate to form the plenum including another wall member **142**, a baffle wall **144**, top and bottom plenum walls **146** and **148**, respectively, and lateral plenum walls **150** and **152**.

[**0072**] Lateral walls **150** and **152** oppose each other and separate wall members **140** and **142**. Similarly, top and bottom walls **146** and **148** oppose each other and separate wall members **140** and **142** such that walls **140, 142, 146, 148, 150** and **152** define a plenum space **151** (see best in **FIG. 5**). In the illustrated embodiment lateral walls **150** and **152** and top and bottom walls **146** and **148** do not form openings although, in some embodiments, those walls may form openings. Wall member **142** forms a plurality of openings some of which are identified by numeral **160**. Openings **160** are generally equi-spaced along the vertical length of member **142** and extend across the width of member **142**.

[**0073**] Baffle member **144** has a size, shape and construction that is similar to wall member **142**. To this end, baffle member **144**, when assembled with other plenum components, is vertically arranged and forms a plurality of openings, some of which are identified by numeral **170** that are essentially vertically equispaced and extend nearly across the width of member **144**. Openings **170** have shapes similar to openings **160**.

[**0074**] In addition to the components described above, door assembly **18** also includes a plurality of brackets best seen in **FIGS. 3 and 5** and collectively identified by numeral **176**. The brackets cooperate to mount baffle assembly **144** against wall assembly **142** for slideable movement to any of several vertical positions. For example, referring to **FIGS. 7 and 8**, two different baffle positions relative to member **142** are illustrated. In **FIG. 7**, baffle **144** is positioned in a relatively low orientation with respect to wall member **142** and therefore openings **170** are misaligned with openings **160** and the effective openings **178** are relatively small. In **FIG. 8**, baffle **144** is positioned relative to wall member **142** such that openings **170** are aligned with openings **160** and the effective openings **178** are maximized. Brackets **176** should be sized and designed such that they facilitate affirmative vertical baffle movement but such that, after the baffle position is set, the position will be maintained until another affirmative action is taken.

[**0075**] Referring to **FIGS. 3 through 6**, plenum bottom wall **148** forms an opening **190** sized to receive a tube or conduit having a diameter that is essentially identical to the diameter of conduit member **89**. Door assembly **118** further includes a second mating member or conduit member **192** that has a top end **194** and a bottom end **196**. Second conduit member **192** is secured within opening **190** and to that end, any type of securing mechanism can be used. Top end **194** extends into the space **151** defined by the plenum walls while bottom end **196** extends below plenum bottom wall member **148**. Bottom end **196** has a semi-circular cut-out **198** that is similar to cut-out **94** in first tube **98** and is the mirror image thereof such that when the top end **90** of tube **89** and bottom end **196** of tube **192** are brought together, the ends mate and form a passage way. To form a better seal, the mating edges of tubes **89** and/or **192** can be equipped with an elastomeric seal or other sealing mechanism to facilitate air flow from below tile **84** into plenum space **151**.

[**0076**] Referring to **FIGS. 3, 5** and **6**, door assembly **118** is supported by top and bottom hinges **210** and **212**, respectively for pivotal movement between a closed position and any of several different open positions so that a system user can open the plenum door assembly **118** to access the electronic modules therein. Referring also to **FIG. 4**, in order to minimize movement of second tube **192** and therefore potential misalignment, in at least some embodiments of the invention the aperture **190** is provided proximate the lower hinge **212**.

[**0077**] Referring still to **FIGS. 3, 5** and **6**, shelving assembly **107** includes a vertical upright frame member **134** and a plurality of shelf members collectively referred to by numeral **136**. Upright frame member **134** is secured within housing **106** relatively closer to back wall **112** than to door assembly **118** but still forming a space **216** to facilitate air circulation. Shelf members **136** extend from frame member **134** toward door assembly **118**. Shelf members **136** are vertically adjustable so as to accommodate electronic modules having different vertical height requirements.

[**0078**] Electronic modules **26, 28, 30, 32** and **34** are positioned on and supported by separate shelf members **136**. Each electronic module includes one or more small fans near a back end of the module and each module is arranged on its corresponding shelf so that the fan (e.g., **218**) faces frame member **134** and air circulation space **216**. Although not illustrated, a plurality of cables and data buses will be provided either within space **216** or laterally with respect to modules **26, 28, 30, 32** and **34** that provide power to the modules and also enable data communication between the

modules, other modules in other cabinet assemblies and perhaps modules in other critical and non-critical environments.

[0079] Referring yet again to **FIGS. 3, 5** and **6**, while door assembly **118** can be formed of any rigid material, preferably many of the components that constitute door assembly **118** are formed of a transparent material such as a clear or smoked Plexiglas. For example, in one advantageous embodiment, members **140** and **142** and baffle member **144** are all formed of a clear Plexiglas. When so formed, door assembly **118** enables a system user to visually observe the electronic modules (e.g., **26** and **28**) within cabinet assembly **14***a* without opening the door assembly **118**.

[0080] It should be appreciated from the above described configuration of components that the present invention delivers cool air from a cool air source directly to the position relative to heat generating electronic modules that is most efficient for use. Specifically, referring again to **FIGS. 3, 5** and **6**, when door assembly **118** is closed, cool air from within space **78** is provided through controller **21** and conduit members **89** and **192** into the space **151** defined by plenum door assembly **118**. Air within space **151** is forced through aligned openings **160** and **170** in members **142** and **144**, respectively and directly to the front faces of electronic modules **26, 28, 30, 32** and **34**, respectively. With fans **218** opposite the front faces of the modules, when the fans operate, cool air is pulled through each entire electronic module and over heat generating components therein prior to being expelled into space **216**. Air within space **216** then is forced by pressure out opening **210** and into critical environment **10**. Although not illustrated, air within environment **10** (see **FIG. 1**) is then recirculated to the cooling air source where the temperature there is again reduced prior to delivery back into space **78**.

[0081] Referring again to **FIG. 2**, many electronic modules (e.g., **26, 28**, etc.) are equipped to monitor their own operating temperatures and to that end have a module temperature sensor located at a critical area (e.g., proximate a heat sensitive component) within the module. In **FIG. 2** the temperature sensors in modules **26, 28, 30, 32** and **34** are identified by numerals **36, 38, 40, 42** and **44**, respectively. Each module in cabinet **14***a* is linked to supervising controller **16** via data bus **35** and can provide messages thereto in one of several standard network protocols (e.g. simple network management protocol (SNMP), etc.). Thus, each module is capable of determining its own internal temperature and communicating that temperature to supervising controller **16** via a standard network protocol.

[0082] Upon receiving temperature readings from modules **26, 28, 30, 32** and **34**, supervising controller **16** can convert that temperature to a protocol used by the corresponding cooling controller (e.g., **21**) and provide the temperature information to the controller. Cooling controller **21** can use the temperature readings to perform one or more control functions. In the alternative supervisory controller **16** may control controller **21** based on the temperature. For instance, controller **16** may compare each of the module temperatures to threshold temperatures to determine if module temperatures are within an optimal range. An exemplary method **298** is illustrated in **FIG. 11**. Note that while method **298** is described as being performed by controller **16**, the method **298** could also be performed via controller **21**. At block **300** supervising controller **16** receives temperature readings from each module via a standard network protocol. In addition, controller **16** also receives a flow rate reading from each of the cooling controller flow rate sensors (e.g. **51**).

[0083] Next at block **302** supervising controller **16** compares each module temperature T_m to a threshold temperature that is at the high end of an acceptable temperature range where any module temperature exceeds the threshold temperature T_h, control passes to block **304** where supervising controller **16** determines if any temperature is less than a low threshold temperature T_l. If all module temperatures are greater than the low threshold control passes back to block **300** where the module temperatures are again obtained and the process continues.

[0084] Referring again to block **304**, where any module temperature is below the low threshold control passes to block **305** where controller **16** compares the flow rate F_s from controller sensor **51** to a minimum flow rate F_l. Where the flow rate First and second is less than or equal to the minimum flow rate control passes back to block **300**. However, where the sensed rate F_s is greater than the minimum flow rate F_l, control passes to block **308** where supervising controller **16** decreases the damper opening to reduce cooling air flow to the corresponding cabinet.

[0085] Referring again to block **302**, where any module temperature is above the high threshold temperature control passes to block **306** where supervising controller **16** decreases the increases the damper opening to increase cooling air flow to the corresponding cabinet.

[0086] Thus, module temperature sensors that are already provided in each module **24, 26**, etc., can be used to control controller **21** thereby reducing costs associated with previous systems that required dedicated sensors. In addition, existing network linkages can be employed to provide the temperature readings in SNMP or some other standard protocol without additional costs.

[0087] Referring again to **FIG. 5**, as indicated above often power cables and data buses are located within the space **78** below assembly **74** to maintain unobstructed paths within the critical environment **10**. Because of such practices the air pressure and temperature in space **78** can vary appreciably despite the fact that equilibrium is ideal. In conventional systems that cool all of the space within a critical environment, such differences in equilibrium, although important, are relatively less important as the air forced into the environment **10** (see **FIG. 1**) generally mixes prior to being pulled into module cabinets.

[0088] In the case of systems like the present system where cool air is delivered directly to cabinet assemblies (e.g., **14***a*), disparate pressures and temperatures in space **78** are relatively more important. For instance, at one extreme, if no cool air was being delivered to a particular damper, even if the damper were fully open and the module fans were fully on, the cooling effect would be minimal at best. Thus, as indicated above, pressure and temperature sensors **50** and **52** are provided on each damper (e.g., **21**) (see **FIG. 2**). The pressure and temperature readings from sensors **50** and **52** are provided to supervising controller **16**. Supervising controller **16** uses these readings to diagnose problems such as obstructions within space **78**, inefficient cooling and inefficient pressure generation.

[0089] Moreover, referring again to **FIG. 2**, by also providing an ambient temperature sensor **69** at the inlet to the air cooling system, the temperature reading from damper temperature sensor **52**, the temperature reading from the ambient temperature sensor **69** and the flow rate reading from sensor **51** can be monitored and stored for use by supervising controller **16** to compute cooling costs on cabinet by cabinet bases so that cooling costs can be equitably charged to computing customers.

[0090] To this end, an exemplary method **309** for computing cooling costs is illustrated in **FIG. 12**. Beginning at process block **310**, supervising controller **16** monitors air flow rate through each damper during a measurement period. Next, at block **312** supervising controller **16** monitors average damper temperatures during the measurement period for each of the dampers in **FIG. 2**. At block **314** supervising controller **16** monitors the cooling system inlet temperature from sensor **69** during the measurement period.

[0091] Continuing, at block **316**, supervising controller **16** determines the difference between the damper and inlet temperatures. At block **318** serve **16** converts the flow rate and temperature difference to BTUs. At block **320**, the supervising controller **16** stores the results of the BTU calculations for each cabinet in the critical environment. At block **322** supervising controller **16** determines whether or not a billing period for cooling costs has ended. If the billing period has not ended, control passes back up to block **310** and the process continues.

[0092] Where the billing period has been completed, control passes to block **324** where supervising controller **16** adds up the costs for the billing period on a per-cabinet basis. Finally, at block **326**, supervising controller **16** generates a bill corresponding to each of the cabinets and those bills are then provided for clients accordingly.

[0093] While certain methods and apparatus are described above, the present invention is not meant to be so limited and other embodiments are contemplated. For example, referring again to **FIG. 3**, one feature which may be added to the system described above includes a lateral extension **220** that extends from baffle member **144** and which, when door assembly **118** is in the closed position, extends through an opening **222** in lateral housing wall **108**. Extension **220** can be used by an environment administrator to adjust the relative positions of openings **170** and **160** in the plenum door assembly to modify the effective openings **178** without having to open door assembly **118**.

[0094] In addition, referring to **FIG. 10**, another embodiment of a conduit member for delivering cool air from below a control tile **84** into a plenum space **230** is illustrated. To this end, instead of having two separate conduit members **89** and **192** as in **FIG. 4, a** single conduit member **232** may be provided where a bendable portion **234** of the tube member is flexible and can accommodate pivotal motion of the door assembly **118**. To this end, conduit member **232** extends through an aperture **88** within tile **84**. The bottom end of member **232** is similar to the bottom of member **89** described above and therefore will not be described here again. The top end of member **232** bends and forms an essentially 90° angle and extends through an aperture **236** in lateral housing wall **110**. After extending through aperture **236**, the distal end of member **232** has an accordion section allowing that portion of member **232** to bend without cutting off the passage way therethrough. The most distal end **238** of member **232** extends through an aperture **240** in lateral wall **150** of the plenum door assembly **118**. Thus, air is provided through tube **232** to the space **230** within the plenum door assembly **118**.

[0095] Moreover, referring to **FIGS. 7 and 8**, while openings **160** and **170** are essentially identical, other embodiments are contemplated where openings in members **142** and **144** are different, where the opening member **142** are different and where openings in member **144** are different so that the effective openings vertically spaced along the plenum assembly are not equispaced. For example, in some cases it may be advantageous to have larger effective openings at the top of the plenum assembly than at the bottom because the pressure within space **151** (see **FIG. 5**) will be greater at the bottom than at the top. To this end see **FIG. 10** where opening **170***a* is larger than opening **170***b* and therefore effective opening **178***a* is larger than effective opening **178***b*.

[0096] Also, regarding plenum openings, other systems are contemplated that may include more than one separately adjustable baffle such that various openings along the plenum can be separately adjusted.

[0097] Furthermore, while the invention is described as including a complete plenum door assembly **118**, other embodiments are contemplated where a plenum assembly can be retrofitted and attached to an existing cabinet door. To this end, often cabinets already include a space adjacent module front faces to allow air circulation. A retro-fit assembly would be possible within this space and would operate in a fashion similar to that described above. Referring to **FIG. 13**, in the alternative, a plenum retrofit may be attached to the outside of an existing cabinet door. In **FIG. 13, a** cabinet **400** defines a space **410** for housing modules and includes a door **406**. A plenum **408** is attached to the outside surface of door **406** and defines a plenum space or volume **402** therewith. An opening **404** is linked to a cool air source to direct air into space **402** which then passes through openings (not illustrated) in door **406** along the directions of the arrows illustrated.

[0098] In yet another aspect a plenum door assembly may include channel restricting members that cooperate to direct air flow within a plenum space to different openings that open into a cabinet. To this end, referring to **FIGS. 14 and 15**, a transparent door assembly **420** includes a door member **451** that forms a plurality of openings collectively referred to by numeral **424**. Openings **424** are arranged to form upper, middle and lower rows **438**, **436** and **434** of openings, respectively. Lateral plenum walls **422** and **423**, top plenum wall **425** and bottom wall **453** separate door member **451** from an opposing plenum wall **481** to form a plenum space **421**. Bottom wall **453** forms an opening **426** that, when assembly **420** is mounted to a cabinet, mates with a cooling source to provide cool air to space **421** and through openings **424** to the cabinet.

[0099] Referring specifically to **FIG. 14**, the top row **438** of openings has twice as many openings as bottom row **434** and middle row **436** has one and one-half as many openings as bottom row **434**. Additional channel restricting walls **430**, **441**, **443** and **428** are formed between door member **451** and plenum member **481**. Walls **430** and **441** together form a first tier shaped structure positioned so that a narrow end of the

structure is proximate the top of assembly **420** (i.e., is relatively proximate top plenum wall **425**) and the wide end of the structure is proximate the bottom end of assembly **420**. Similarly, walls **443** and **428** together form a second restricting tier shaped structure that is narrower proximate the top of assembly **420** than at the bottom. One other channel restricting wall **477** between walls **451** and **481** extends from a first side of opening **426** to lateral plenum wall **422**. Similarly, another restricting wall **479** between walls **451** and **481** extends from a second side of opening **426** to lateral plenum wall **423**. Together walls **477**, **479**, **430**, **441**, **443** and **428** form channels **427**, **431** and **429** within the plenum space **421** that are narrower at the bottom of plenum space **421** than at the top (i.e., are narrower proximate opening **426**).

[**0100**] As illustrated, wall member **422**, restricting wall **477** and member **430** together define channel **427** along the left side of assembly **420** where two bottom row **434** openings **424** are encountered followed by three and four openings **424** in rows **436** and **438**, respectively. The width of channel **427** increases from bottom to top. Similarly, members **430** and **428** form center channel **431** that increases in width from bottom to top and includes two, three and four openings **424** from rows **434**, **436** and **438**, respectively. Moreover, wall **423**, wall **474** and wall **428** from third channel **429** that widens from bottom to top and includes two, three and four openings **424** from rows **434**, **436** and **438**, respectively. By selecting the opening sizes and configuring the channels **427**, **431** and **429** appropriately, assembly **420** can be configured such that essentially the same amount of air exits the openings in each of rows **434**, **436** and **438**. Although not illustrated, separate baffle members (see **144** in **FIG. 3**) may be provided, one baffle member for each grouping of openings **424** so that relative opening sizes can be adjusted. For instance, a separate baffle may be provided for the three openings **424** in row **436** and channel **427** while another baffle may be provided for the three openings **424** in row **436** and channel **431**.

[**0101**] Thus, referring still to **FIG. 14**, if the plenum is viewed as having top and bottom sections that correspond to the top and bottom of assembly **420** where opening **426** opens into the bottom section, in some advantageous embodiments, the channels **427**, **429**, **431** widen as air moves from the bottom section to the top section and, generally speaking, the combined space or areas of the openings **424** in the bottom section is less than the combined areas of the openings **424** in the top section.

[**0102**] Referring now to **FIGS. 16 and 17**, another door assembly **500** that has similar operating characteristics as assembly **420** of **FIG. 14** is illustrated. Assembly **500** includes a door wall **512** and a plenum wall **520** that are separated by top, bottom and two lateral walls **502**, **504**, **506** and **508**, respectively, to form a plenum space **550** therebetween. Bottom wall **508** forms an opening **516** that, when assembly **500** is mounted to a cabinet and is in a closed position, mates with a cooling air source to provide cooling air to space **550**.

[**0103**] Door wall **512** forms a plurality of openings **524** that open from space **550** into a cabinet (not illustrated) when assembly **500** is mounted and closed to the cabinet. Openings **524** are arranged into upper, middle and lower rows **526**, **528** and **530**, respectively.

[**0104**] In order to deliver cooling air generally evenly to a cabinet, assembly **500** has two features. First, as in the case of assembly **420** in **FIG. 14**, door wall **512** forms more openings in upper row **526** than in the lower and middle rows and middle row **528** forms more openings than in lower row **530**. Second, referring specifically to **FIG. 17**, plenum wall **520** bows away from door wall **512** being relatively closer to wall **512** at a bottom end (i.e., proximate opening **516**) than at the top end.

[**0105**] Furthermore, referring again to **FIG. 2**, temperature sensor **73** inside cabinet **14***a* is linked to controller **21**. Sensor **73** may provide redundancy for sensors **36**, **38**, etc., or may supplant the module sensors **36**, **38**, etc., so that controller **21** operates independent of controller **16**.

[**0106**] Sensor **75** on the outside of cabinet **14***a* is also linked to controller **16** and provides an ambient temperature reading thereto at the cabinet location. The temperature at the cabinet location may have a dual function. First, the temperature may be used as an ambient temperature indicator or all of the temperature readings from all of the temperature sensors may be averaged to generate an ambient temperature. Second, the temperature readings from all of the external sensors (e.g., **75**) may be used to generate a three dimensional temperature graph for observation by an environment administrator.

[**0107**] Moreover, referring again to **FIGS. 2 and 3**, in at least one embodiment of the inventive cabinet, a cabinet closure sensor or latch **31** is provided. The illustrated latch is a proximity sensor that senses when door assembly **118** is in the closes position. Latch **31** is linked to controller **16** and indicates assembly **118** status (i.e., opened or closed). When assembly **118** is closed controller **16** (or controller **21** where controller **21** controls the damper) causes the damper associated with the cabinet to direct cooling air into the plenum and cabinet. However, where assembly **118** is opened, controller **16** causes the corresponding damper to close or at least reduce the flow therethrough to minimize loss of cool air into the ambient. Furthermore, controller **16** may track the duration of any period when the door assembly **118** is open and, when the period reaches some threshold value (e.g., 15 minutes), may generate an alarm indicating that the door has been opened.

[**0108**] In addition, while certain control algorithms have been described above, it should be appreciated that other variations also exist. For example, controller **21** may control its corresponding damper simply as a function of one or more temperatures in cabinet **14***a*. In the alternative, controller **21** may receive one or more temperature readings from within cabinet, determine a desired flow rate as a function of the temperatures and then modify damper position to achieve the desired flow rate. As yet another alternative controller **16** may determine a desired flow rate for a cabinet and, based on a static pressure at an entry port to a corresponding damper, adjust damper position to provide the desired flow rate.

[**0109**] To apprise the public of the scope of this invention, the following claims are made:

What is claimed is:

1. An apparatus for use with a frame defining a front, a back and first and second sides extending from the frame front to the frame back for supporting and mounting at least

one electronic module, the module including a front wall and a back wall, the front wall forming at least one inlet and the back wall forming at least one outlet, the apparatus for delivering air to the at least one module and comprising:

at least one plenum mounted to the first side and defining a passageway adjacent the front side of the frame, the plenum forming at least one opening facing the first side; and

a cooling air source linked to the plenum to provide cooling air to the plenum.

2. The apparatus of claim 1 wherein the plenum includes a door member and at least one wall member spaced from the door member so as to form the passageway, the door member having an edge and being hingedly linked to the frame along the edge for rotation about the edge between a closed position where the plenum is adjacent the first side and the opening is proximate the first side and an open position where the plenum is extended from the first side.

3. The apparatus of claim 2 wherein the plenum further includes first and second plenum lateral walls and an end wall, the lateral walls opposing each other and traversing the distance between the door member and the wall member and the end wall traversing the distance between the lateral wall members opposite the air source.

4. The apparatus of claim 2 further including a first mating member linked to the air source and a second mating member linked to the plenum and positioned proximate the first mating member when the door member is closed, the first and second mating members configured such that one of the mating members receives the other mating member when the door member is closed and the mating members together form a passage from the air source to the plenum

5. The apparatus of claim 4 wherein the air source is positioned below the door member and the second mating member extends upward below the door member when the door member is in the closed position.

6. The apparatus of claim 5 wherein the second mating member extends upward below the hinge.

7. The apparatus of claim 6 wherein the air source is below a floor that supports the frame.

8. The apparatus of claim 3 further including a conduit member positioned proximate the hinged edge of the door connecting the air source to the plenum.

9. The apparatus of claim 1 wherein the plenum is formed at least in part of a transparent material.

10. The apparatus of claim 9 wherein the plenum is formed at least in part of Plexiglas.

11. The apparatus of claim 1 wherein the plenum further includes a baffle member mounted adjacent the opening for movement with respect thereto, the baffle member movable with respect to the opening such that the baffle member blocks different portions of the opening.

12. The apparatus of claim 11 wherein the plenum forms a plurality of openings and wherein the baffle member is moveable with respect to the plurality of openings to block varying portions of the openings.

13. The apparatus of claim 11 wherein the plenum forms a plurality of openings and the apparatus further includes a plurality of baffle members, the baffle members moveable with respect to the openings to block varying portions of the openings.

14. The apparatus of claim 11 wherein the plenum and the baffle member are at least in part formed of transparent material.

15. The apparatus of claim 1 wherein the first side has a width dimension and the opening has a width dimension similar to the width dimension of the first side.

16. The apparatus of claim 1 wherein the plenum forms a plurality of openings.

17. The apparatus of claim 16 wherein the openings are equi-spaced along a vertical length of the plenum.

18. The apparatus of claim 1 wherein the plenum includes two sections and the source opens into a first of the sections, the plenum forming at least one channel that increase in width from the first to the second sections.

19. The apparatus of claim 18 wherein the opening includes a plurality of openings and wherein the openings in the first section have a greater combined space than the openings in the second section.

20. The apparatus of claim 2 further including a damper positioned between the cooling source and the plenum, a sensor for sensing the position of the door member and a processor, the sensor and damper linked to the processor, when the door member is in the open position, the processor causing the damper to reduce air flow to the plenum.

21. The apparatus of claim 20 wherein, when the door member is opened, the processor causes the damper to block air flow to the plenum.

22. A cooling assembly for cooling at least one electronic module, the module including a front wall and a back wall, the front wall forming at least one inlet and the back wall forming at least one outlet, the front wall also forming a front surface, the assembly comprising:

a frame defining a front side, a back side and first and second sides that separate frame front and back sides;

a rack mounted inside the frame including an upright member and at least one essentially horizontal shelf member, the module positionable on the shelf member such that the front surface faces the front side;

at least one air delivery member forming at least one opening, the delivery member mounted to the frame such that the opening faces the front surface; and

a cooling air source linked to the delivery member to deliver cooling air to the delivery member.

23. The assembly of claim 22 further including first and second lateral wall members that essentially close the first and second sides of the frame, respectively.

24. The assembly of claim 23 further including a back wall member that essentially closes the back side of the frame.

25. The assembly of claim 24 wherein the frame further defines top and bottom sides and further includes top and bottom wall members that essentially close the top and sides, respectively.

26. The assembly of claim 25 wherein the top wall forms at least one outlet proximate the back wall member.

27. The assembly of claim 26 wherein, when in a closed position, the delivery member essentially blocks the front side of the frame.

28. The assembly of claim 27 wherein the delivery member is hingedly mounted to the frame for movement between the closed position and an open position where the first side is unobstructed.

29. The assembly of claim 22 wherein, when in a closed position, the delivery member essentially blocks the front side of the frame.

30. The assembly of claim 29 wherein the delivery member is hingedly mounted to the frame for movement between the closed position and an open position where the first side is unobstructed.

31. The assembly of claim 30 wherein size of the opening formed by the delivery member is adjustable.

32. The assembly of claim 30 wherein the delivery member forms a plurality of openings facing the rack, at least some of the openings vertically spaced along the delivery member.

33. A cooling assembly comprising:

an electronic module including a front wall and a back wall, the front wall forming at least one inlet and the back wall forming at least one outlet, the front wall also forming a front surface, the module including at least one operating parameter sensor, linked to a data bus and capable of communicating status of the at least one operating parameter via a standard network protocol;

at least one air delivery member forming at least one opening, the delivery member mounted adjacent the module such that the opening faces the front surface;

a damper linked to the air delivery member and linked to the data bus;

a cooling air source linked to the damper; and

a processor linked to the bus for receiving the status communication and for controlling the damper as a function of the status communication.

34. The assembly of claim 33 wherein the standard network protocol is the simple network management protocol (SNMP).

35. An apparatus for cooling at least one electronic module inside a module cabinet, the cabinet including a door, the apparatus comprising:

a cooling air source linked to the cabinet;

a sensor for sensing the status of the door; and

a controller for controlling the amount of air provided to the cabinet via the cooling air source, the controller linked to the sensor and programmed to modify the cooling air volume delivered to the cabinet as a function of the door status.

34. The apparatus of claim 33 wherein the controller reduces the air delivered to the cabinet when the door is opened.

35. The apparatus of claim 34 wherein the controller blocks air delivery to the cabinet when the door is opened.

* * * * *