IN THE UNITED STATES DISTRICT COURT
FOR THE EASTERN DISTRICT OF TEXAS
MARSHALL DIVISION

Valtrus Innovations Ltd. and	§	
Key Patent Innovations Ltd.	§	
	§	
Plaintiff,	§	
v.	§	**CIVIL ACTION NO. 2:24-cv-00777**
	§	
DataBank Holdings Ltd.	§	**JURY TRIAL DEMANDED**
	§	
Defendant.	§	
	§	

COMPLAINT FOR PATENT INFRINGEMENT AND JURY DEMAND

Plaintiffs Valtrus Innovations Limited ("Valtrus") and Key Patent Innovations Limited ("KPI") (collectively, "Plaintiffs"), by and through its undersigned counsel, bring this complaint for patent infringement and damages against Defendant DataBank Holdings Ltd. ("DataBank" or "Defendant") and, in support, allege the following:

PARTIES

1. Plaintiff Valtrus is the successor-in-interest to a substantial patent portfolio created by Hewlett Packard Enterprise and its predecessor, subsidiary, and affiliate companies, including Hewlett-Packard Development Company, L.P. (collectively, "HPE"). Valtrus is an Irish entity duly organized and existing under the laws of Ireland. The address of the registered office of Valtrus is: The Glasshouses GH2, 92 Georges Street Lower, Dun Laoghaire, Dublin A96 VR66, Ireland. HPE's worldwide corporate headquarters is located in Houston, Texas. One of HPE's primary U.S. facilities is located in Plano, Texas.

2. Plaintiff KPI is the beneficiary of a trust pursuant to which Valtrus owns, holds, and asserts the Asserted Patents. KPI is an Irish entity duly organized and existing under the laws of

Ireland. The address of the registered office of KPI is: The Glasshouses GH2, 92 Georges Street Lower, Dun Laoghaire, Dublin A96 VR66, Ireland.

3. On information and belief, DataBank Holdings Ltd. is a corporation organized and existing under the laws of the State of Delaware, with a principal place of business at 400 South Akard St., Suite 100, Dallas, TX 75202. DataBank has a regular and established place of business at two data centers located in this District: DFW3 and DFW8, both located at 8375 Dominion Pkwy, Plano, TX 75024 (collectively referred to as "DFW Data Centers"). On information and belief, DataBank may be served with process through its registered agent at Cogency Global Inc., 1601 Elm St., Ste. 4360, Dallas, TX 75201.

PATENTS IN SUIT

4. Valtrus is the assignee of and owns all right and title to U.S. Patent Nos. 6,718,277 (the "'277 Patent"); 6,854,284 (the "'284 Patent"); 6,868,682 (the "'682 Patent"); 6,868,683 (the "'683 Patent"); 6,854,287 (the "'287 Patent"); 6,862,179 (the "'179 Patent"); and 7,031,870 (the "'870 Patent") (collectively, "the Asserted Patents").

5. The Asserted Patents were developed by inventors working for HPE. HPE developed numerous innovative and diverse technologies, including groundbreaking inventions pertaining to data center cooling, analytics for monitoring conditions in data centers, and structural organization of data centers.

6. The '277 Patent, entitled "Atmospheric control within a building," was duly and lawfully issued on April 6, 2004. A true and correct copy of the '277 Patent is attached hereto as Exhibit 1.

7. The ’277 Patent was in full force and effect since its issuance. Valtrus owns by assignment the entire right and title in and to the ’277 Patent, including the right to seek damages, including past damages, for any infringement thereof.

8. The ’284 Patent, entitled “Cooling of data centers,” was duly and lawfully issued on February 15, 2005. A true and correct copy of the ’284 Patent is attached hereto as Exhibit 2.

9. The ’284 Patent was in full force and effect since its issuance. Valtrus owns by assignment the entire right and title in and to the ’284 Patent, including the right to seek damages, including past damages, for any infringement thereof.

10. The ’682 Patent, entitled “Agent based control method and system for energy management,” was duly and lawfully issued on March 22, 2005. A true and correct copy of the ’682 Patent is attached hereto as Exhibit 3.

11. The ’682 Patent was in full force and effect since its issuance. Valtrus owns by assignment the entire right and title in and to the ’682 Patent, including the right to seek damages, including past damages, for any infringement thereof.

12. The ’683 Patent, entitled, “Cooling of data centers,” was duly and lawfully issued on March 22, 2005. A true and correct copy of the ’682 Patent is attached hereto as Exhibit 4.

13. The ’683 Patent was in full force and effect since its issuance. Valtrus owns by assignment the entire right and title in and to the ’683 Patent, including the right to seek damages, including past damages, for any infringement thereof.

14. The ’287 Patent, entitled “Cooling system,” was duly and lawfully issued on February 15, 2005. A true and correct copy of the ’287 Patent is attached hereto as Exhibit 5.

15. The ’287 Patent was in full force and effect since its issuance. Valtrus owns by assignment the entire right and title in and to the ’287 Patent, including the right to seek damages, including past damages, for any infringement thereof.

16. The ’179 Patent, entitled “Partition for varying the supply of cooling fluid,” was duly and lawfully issued on March 1, 2005. A true and correct copy of the ’179 Patent is attached hereto as Exhibit 6.

17. The ’179 Patent was in full force and effect since its issuance. Valtrus owns by assignment the entire right and title in and to the ’179 Patent, including the right to seek damages, including past damages, for any infringement thereof.

18. The ’870 Patent, entitled “Data center evaluation using an air re-circulation index,” was duly and lawfully issued on April 18, 2006. A true and correct copy of the ’870 Patent is attached hereto as Exhibit 7.

19. The ’870 Patent has been in full force and effect since its issuance. Valtrus owns by assignment the entire right and title in and to the ’870 Patent, including the right to seek damages, including past damages, for any infringement thereof.

20. DataBank has been on notice of the Asserted Patents and its infringement of several of the Asserted Patents since at least April 1, 2024. Valtrus sent DataBank a letter on March 29, 2024 regarding a Notice of Infringement of Valtrus Innovation Ltd.’s Patents (“Notice Letter”). The Notice Letter was delivered to DataBank on April 1, 2024. The Notice Letter was addressed to DataBank’s General Counsel, Daniel Yamagishi, and provided the specific factual basis for Valtrus’ allegations of infringement. The Notice Letter also proposed a meeting to discuss a potential license or other arrangement between Valtrus and DataBank.

21. DataBank, through counsel, responded to the Notice Letter on June 14, 2024. Valtrus and DataBank have exchanged correspondence regarding the Notice Letter. Valtrus has continued to explain the factual basis for DataBank's infringement of Valtrus' patents and has requested to meet. To date, DataBank has not stopped its infringing activities.

JURISDICTION AND VENUE

22. Plaintiffs incorporate by reference paragraphs 1-21 herein.

23. This civil action arises under the patent laws of the United States, 35 U.S.C. § 1 *et seq.*, including without limitation 35 U.S.C. §§ 271, 281, 283, 284, and 285. This is a patent infringement lawsuit over which this Court has subject matter jurisdiction under, *inter alia*, 28 U.S.C. §§ 1331, 1332, and 1338(a).

24. This District has general and specific personal jurisdiction over DataBank because, directly or through intermediaries, DataBank has committed acts within this District giving rise to this action; is present in and transacts and conducts business, directly, and/or indirectly, in this District and the State of Texas; and transacts and conduct business with residents of this District and the State of Texas.

25. Plaintiffs' causes of action arise, at least in part, from DataBank's contacts with and activities in and/or directed at this District and the State of Texas.

26. DataBank has infringed the Asserted Patents within this District and the State of Texas by making, using, selling, offering for sale, and/or importing in or into this District and elsewhere in the State of Texas, products and services covered by claims in the Asserted Patents, including without limitation products that, when made or used, practice the claimed methods of the Asserted Patents. DataBank, directly and through intermediaries, makes, uses, sells, offers for sale, imports, ships, distributes, advertises, promotes, and/or otherwise commercializes such

infringing products and services in or into this District and the State of Texas. DataBank regularly conducts and solicits business in, engages in other persistent courses of conduct in, and/or derives substantial revenue from goods and services provided to residents of this District and the State of Texas.

27. This Court has personal jurisdiction over DataBank pursuant to TEX. CIV. PRAC. & REM. CODE § 17.041 *et seq.*

28. Venue is proper in this District under 28 U.S.C. §§ 1391(b)-(c) and 1400(b).

29. DataBank is doing business, either directly or through respective agents, on an ongoing basis in this Judicial District and elsewhere in the United States and has committed acts of infringement in this district. DataBank has a regular and established place of business in this Judicial District, including at its DFW Data Centers. On information and belief, DataBank makes, uses, sells, offers to sell, and/or imports infringing products into and/or within this District, including at its DFW Data Centers. DataBank maintains a permanent and/or continuing presence within this District at its DFW Data Centers, and has the requisite minimum contacts with this District such that this venue is a fair and reasonable one. Upon information and belief, DataBank has transacted and, at the time of the filing of the Complaint, is continuing to transact business within this District.

FIRST CLAIM

(Infringement of the ’277 Patent)

30. Plaintiffs re-allege and incorporate herein by reference paragraphs 1-29 of the Complaint.

31. The ’277 Patent is generally directed to atmospheric control within a building.

32. DataBank has, under 35 U.S.C. § 271(a), directly infringed, literally and/or under the doctrine of equivalents, one or more claims, including without limitation at least claim 1, of the ’277 Patent, by making, using, selling, offering for sale, and/or importing systems in its data centers for cooling, or otherwise controlling atmospheric conditions within, the data centers. For example, on information and belief, and before the expiration of the ’277 Patent, DataBank operated cooling systems in its data centers in a manner that infringed the ’277 Patent. An exemplary claim chart demonstrating one way in which DataBank infringed claim 1 of the ’277 Patent is attached as Exhibit 8.

SECOND CLAIM

(Infringement of the ’284 Patent)

33. Plaintiffs re-allege and incorporate herein by reference paragraphs 1-32 of the Complaint.

34. The ’284 Patent is generally directed to a system and method for cooling racks in a data center.

35. DataBank has, under 35 U.S.C. § 271(a), directly infringed, literally and/or under the doctrine of equivalents, one or more claims, including without limitation at least claim 1 of the ’284 Patent, by making, using, selling, offering for sale, and/or importing systems in its datacenters for cooling the datacenters. For example, on information and belief, and before the expiration of the ’284 Patent, DataBank operated cooling systems in its data centers in a manner that infringed the ’284 Patent. An exemplary claim chart demonstrating one way in which DataBank infringed claim 10 of the ’284 Patent is attached as Exhibit 9.

THIRD CLAIM

(Infringement of the ’682 Patent)

36. Plaintiffs re-allege and incorporate herein by reference paragraphs 1-35 of the Complaint.

37. The ’682 Patent is generally directed to a system and method for controlling the temperature in a data center based on sensory data.

38. DataBank has, under 35 U.S.C. § 271(a), directly infringed, literally and/or under the doctrine of equivalents, one or more claims, including without limitation at least claim 1 of the ’682 Patent, by making, using, selling, offering for sale, and/or importing systems in its datacenters for cooling the datacenters. For example, on information and belief, and before the expiration of the ’682 Patent, DataBank operated cooling systems in its data centers in a manner that infringed the ’682 Patent. An exemplary claim chart demonstrating one way in which DataBank infringed claim 1 of the ’682 Patent is attached as Exhibit 10.

FOURTH CLAIM

(Infringement of the ’683 Patent)

39. Plaintiffs re-allege and incorporate herein by reference paragraphs 1-38 of the Complaint.

40. The ’683 Patent is generally directed to cooling racks in a date center using returns and an outlet.

41. DataBank has, under 35 U.S.C. § 271(a), directly infringed, literally and/or under the doctrine of equivalents, one or more claims, including without limitation at least claim 1 of the ’683 Patent, by making, using, selling, offering for sale, and/or importing systems in its datacenters for cooling the datacenters. For example, on information and belief, and before the expiration of the ’683 Patent, DataBank operated cooling systems in its data centers in a manner that infringed

the ’683 Patent. An exemplary claim chart demonstrating one way in which DataBank infringed claim 10 of the ’683 Patent is attached as Exhibit 11.

FIFTH CLAIM

(Infringement of the ’287 Patent)

42. Plaintiffs re-allege and incorporate herein by reference paragraphs 1-41 of the Complaint.

43. The ’287 Patent is generally directed to a system and method for cooling a room configured to house a plurality of computer systems.

44. DataBank has, under 35 U.S.C. § 271(a), directly infringed, literally and/or under the doctrine of equivalents, one or more claims, including without limitation at least claim 1 of the ’287 Patent, by making, using, selling, offering for sale, and/or importing systems in its datacenters for cooling the datacenters. For example, on information and belief, and before the expiration of the ’287 Patent, DataBank operated cooling systems in its data centers in a manner that infringed the ’287 Patent. An exemplary claim chart demonstrating one way in which DataBank infringed claim 1 of the ’287 Patent is attached as Exhibit 12.

SIXTH CLAIM

(Infringement of the ’179 Patent)

45. Plaintiffs re-allege and incorporate herein by reference paragraphs 1-44 of the Complaint.

46. The ’179 Patent is generally directed to a partition for varying the supply of cooling fluid in a data center.

47. DataBank has, under 35 U.S.C. § 271(a), directly infringed, literally and/or under the doctrine of equivalents, one or more claims, including without limitation at least claim 1 of the

’179 Patent, by making, using, selling, offering for sale, and/or importing cooling systems in its data centers, including a partition for varying the supply of cooling fluid. For example, on information and belief, and before the expiration of the ’179 Patent, DataBank operated cooling systems in its data centers in a manner that infringes the ’179 Patent. An exemplary claim chart demonstrating one way in which DataBank infringes claim 1 of the ’179 Patent is attached as Exhibit 13.

SEVENTH CLAIM

(Infringement of the ’870 Patent)

48. Plaintiffs re-allege and incorporate herein by reference paragraphs 1-47 of the Complaint.

49. The ’870 Patent is generally directed to a system and method for evaluating one or more components in a data center.

50. DataBank has been on notice of the ’870 Patent and a specific factual basis for its infringement of the ’870 Patent since at least the date of Valtrus’ Notice Letter. On information and belief, DataBank did not take any action to stop its infringement.

51. DataBank has, under 35 U.S.C. § 271(a), directly infringed, literally and/or under the doctrine of equivalents, one or more claims, including without limitation at least claim 1 of the ’870 Patent, by making, using, selling, offering for sale, and/or importing cooling systems in its data centers. For example, on information and belief, DataBank operates cooling systems in its data centers in a manner that infringes the ’870 Patent. An exemplary claim chart demonstrating one way in which DataBank infringes claim 1 of the ’870 Patent is attached as Exhibit 14.

52. To the extent DataBank has failed to take any action to stop its infringement after being placed on notice of the above, such infringement has been willful.

PRAYER FOR RELIEF

WHEREFORE, Plaintiffs prays for judgment against DataBank as follows:

A. That DataBank has infringed each of the Asserted Patents, and unless enjoined, will continue to infringe one or more of the applicable Asserted Patents;

B. That DataBank's infringement of one or more of the applicable Asserted Patents has been willful;

C. That DataBank pay Plaintiffs damages adequate to compensate Plaintiffs for DataBank's past infringement of each of the Asserted Patents, and present and future infringement of the applicable Asserted Patents, together with interest and costs under 35 U.S.C. § 284;

D. That DataBank pay prejudgment and post-judgment interest on the damages assessed;

E. That DataBank pay Plaintiffs enhanced damages pursuant to 35 U.S.C. § 284;

F. That DataBank be enjoined from infringing the '870 Patent, or if its infringement is not enjoined, that DataBank be ordered to pay ongoing royalties to Plaintiffs for any post-judgment infringement of the '870 Patent;

G. That this is an exceptional case under 35 U.S.C. § 285; and that DataBank pay Plaintiffs' attorneys' fees and costs in this action; and

H. That Plaintiffs be awarded such other and further relief, including equitable relief, as this Court deems just and proper.

DEMAND FOR JURY TRIAL

Pursuant to Federal Rule of Civil Procedure 38(b), Plaintiffs hereby demands a trial by jury on all issues triable to a jury.

September 25, 2024

Respectfully submitted,

/s/ Eric H. Findlay
Matthew G. Berkowitz – LEAD ATTORNEY
Aaron Morris
Reichman Jorgensen Lehman & Feldberg LLP
100 Marine Parkway, Suite 300
Redwood Shores, CA 94065
Tel: (650) 623-1401
mberkowitz@reichmanjorgensen.com
amorris@reichmanjorgensen.com

Connor S. Houghton
Ariane S. Mann (TX Bar No. 24140399)
Reichman Jorgensen Lehman & Feldberg LLP
1909 K Street NW, Suite 800
Washington DC, 20006
Tel: (202) 894-7310
choughton@reichmanjorgensen.com
amann@reichmanjorgensen.com

Eric H. Findlay (TX Bar No. 00789886)
FINDLAY CRAFT, P.C.
7270 Crosswater Avenue, Suite B
Tyler, Texas 75703
Tel: (903) 534-1100
Fax: (903) 534-1137
Email: efindlay@findlaycraft.com

Attorneys for Plaintiffs
Valtrus Innovations Limited and Key Patent Innovations Limited

Exhibit 1

US006718277B2

(12) **United States Patent**
Sharma

(10) **Patent No.: US 6,718,277 B2**
(45) **Date of Patent: Apr. 6, 2004**

(54) **ATMOSPHERIC CONTROL WITHIN A BUILDING**

(75) Inventor: **Ratnesh Sharma**, Union City, CA (US)

(73) Assignee: **Hewlett-Packard Development Company, L.P.**, Houston, TX (US)

(*) Notice: Subject to any disclaimer, the term of this patent is extended or adjusted under 35 U.S.C. 154(b) by 0 days.

(21) Appl. No.: **10/123,403**

(22) Filed: **Apr. 17, 2002**

(65) **Prior Publication Data**

US 2003/0200050 A1 Oct. 23, 2003

(51) **Int. Cl.**[7] **G06F 15/00**; F24F 7/007; G05D 15/00

(52) **U.S. Cl.** **702/132**; 165/80.03; 236/13; 236/49.3; 361/695; 454/229; 700/41

(58) **Field of Search** 702/132; 700/41, 700/70, 117, 205; 62/180, 205, 259.2, 263; 236/49.3; 454/187, 229, 256; 73/31.01, 31.02; 361/695

(56) **References Cited**

U.S. PATENT DOCUMENTS

2,991,405	A		7/1961	Carlson	318/471
4,737,917	A		4/1988	Perron	700/205
4,823,290	A		4/1989	Fasack et al.	340/825.01
5,074,137	A	*	12/1991	Harris et al.	73/31.01
5,177,972	A		1/1993	Sillato et al.	62/205
5,249,741	A		10/1993	Bistline et al.	236/49.3
5,290,200	A	*	3/1994	Kiser	454/229
5,326,028	A		7/1994	Kano et al.	236/49.3
5,331,825	A		7/1994	Kim	62/180
5,372,426	A		12/1994	Broudy et al.	374/127
5,478,276	A		12/1995	Lee	454/256
5,506,768	A		4/1996	Seem et al.	700/41
5,687,079	A		11/1997	Bauer et al.	700/70
5,709,100	A		1/1998	Baer et al.	62/259.2
5,769,315	A	*	6/1998	Drees	236/49.3
5,828,572	A		10/1998	Hasegawa et al.	700/117
6,009,939	A		1/2000	Nakanishi et al.	165/209
6,080,060	A		6/2000	Larsson	454/187
6,283,380	B1		9/2001	Nakanishi et al.	236/49.3
6,296,193	B1		10/2001	West et al.	236/1 B
6,574,104	B2	*	6/2003	Patel et al.	361/695

* cited by examiner

Primary Examiner—John Barlow
Assistant Examiner—John Le

(57) **ABSTRACT**

A method and system for controlling atmospheric conditions within a building. A conditioned fluid is supplied inside of the building and one or more atmospheric parameters in various locations inside of the building are sensed. An empirical atmospheric map is then generated and compared to a template atmospheric map. Pattern differentials are identified therebetween and corrective action to reduce the pattern differentials is determined. One or more of the quantity, quality, and distribution of the conditioned fluid is varied in accord with the corrective action determination.

24 Claims, 2 Drawing Sheets

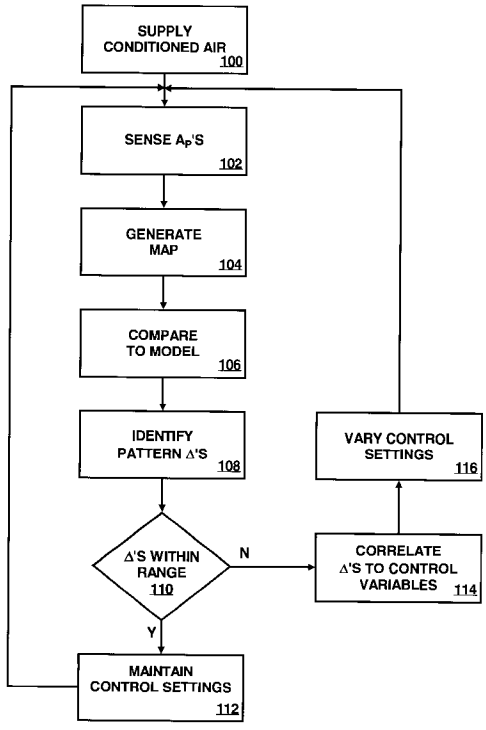

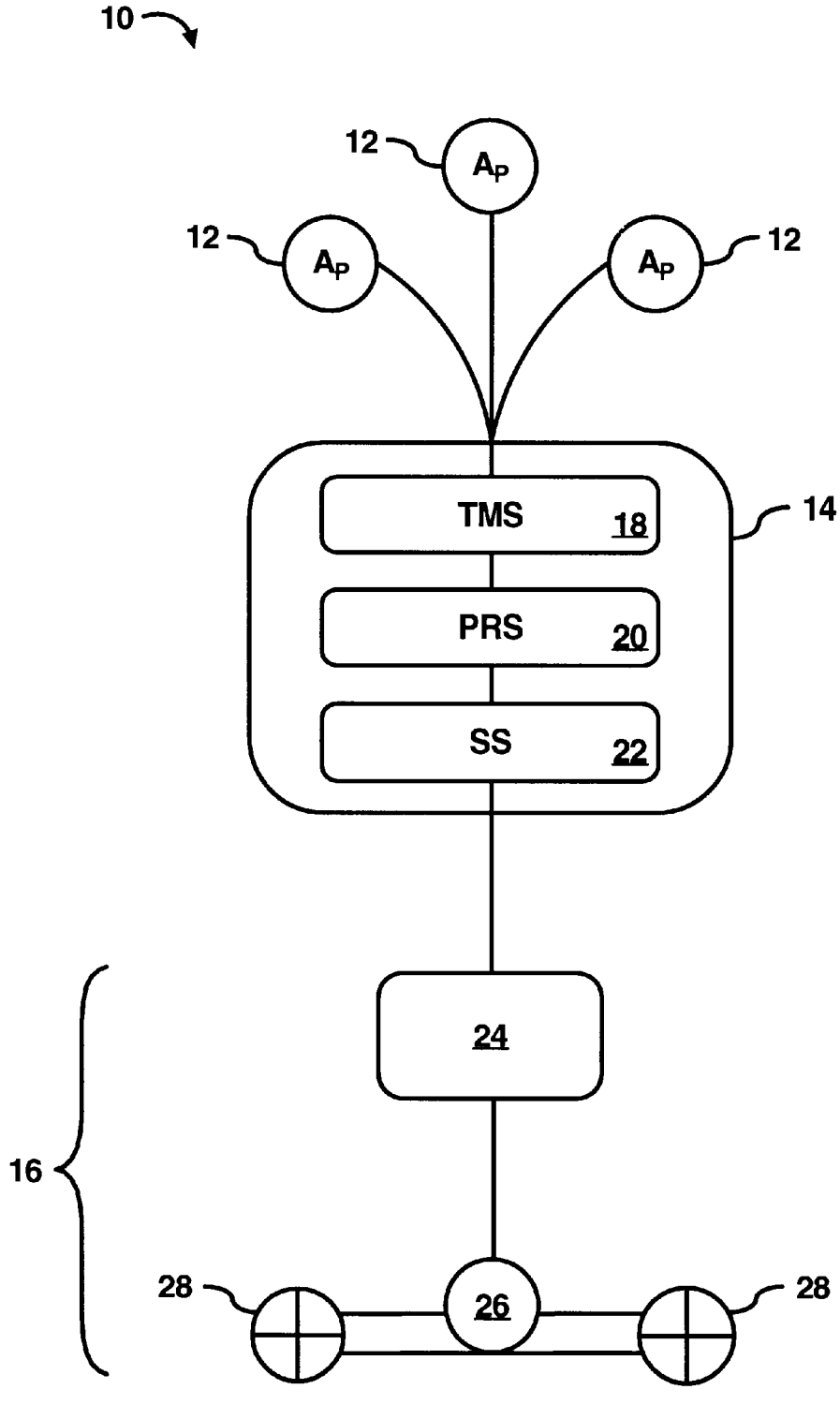

FIG. 1

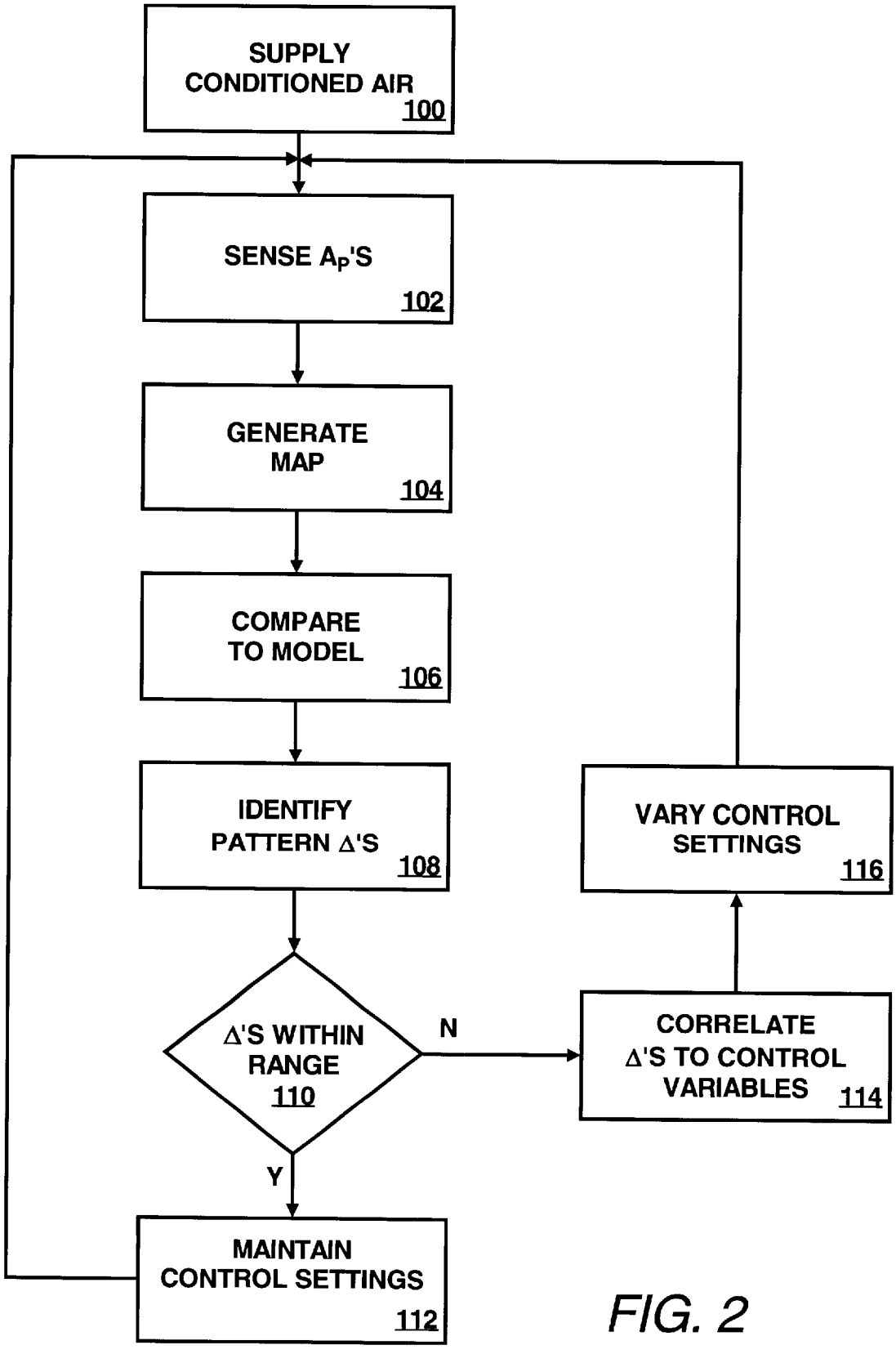
SUPPLY CONDITIONED AIR
100
SENSE A_P'S
102
GENERATE MAP
104
COMPARE TO MODEL
106
IDENTIFY PATTERN Δ'S
108
Δ'S WITHIN RANGE
110
N
Y
CORRELATE Δ'S TO CONTROL VARIABLES
114
VARY CONTROL SETTINGS
116
MAINTAIN CONTROL SETTINGS
112

FIG. 2

ATMOSPHERIC CONTROL WITHIN A BUILDING

CROSS-REFERENCES TO RELATED APPLICATIONS

The present invention is related to the following pending applications: Ser. No. 09/970,707, filed Oct. 5, 2001, and entitled "SMART COOLING OF DATA CENTERS", by Patel et al.; Ser. No. 10/076,635, filed Feb. 19, 2002, and entitled "DESIGNING LAYOUT FOR INTERNET DATA-CENTER COOLING", by Nakagawa et al; and Ser. No. 10/022,010, filed Apr. 16, 2002, and entitled "DATA CENTER ENERGY MANAGEMENT", by Friedrich et al. Each of the above listed cross-references is assigned to the assignee of the present invention and is incorporated by reference herein.

BACKGROUND

The present invention relates to controlling atmospheric conditions within a building. One type of building is a data center that houses numerous electronic packages. Each electronic package is arranged in one of a plurality of racks distributed throughout the data center. A rack may be defined as an Electronics Industry Association (EIA) enclosure and may be configured to house a number of personal computer (PC) boards. The PC boards typically include a number of electronic packages, such as processors, micro-controllers, high speed video cards, memories, semi-conductor devices, and the like. These electronic packages dissipate relatively significant amounts of heat during the operation of the respective components. For example, a typical PC board comprising multiple microprocessors may dissipate approximately 250 W of power. Thus, a rack containing forty (40) PC boards of this type may dissipate approximately 10 KW of power.

The power required to remove the heat dissipated by the electronic packages in a given rack is generally equal to about 10 percent of the power needed to operate the packages. However, the power required to remove the heat dissipated by a plurality of racks in a data center is generally equal to about 50 percent of the power needed to operate the packages in the racks. The disparity in the amount of power required to dissipate the various heat loads between racks of data centers stems from the additional thermodynamic work needed in the data center to cool the air. Racks are typically cooled with fans that operate to move cooling fluid, such as air, across the heat dissipating components, whereas data centers often use reverse power cycles to cool heated return air. The additional work required to achieve the temperature reduction, in addition to the work associated with moving the cooling fluid in the data center and the condenser, often add up to the 50 percent power requirement mentioned above. As such, the cooling of entire data centers presents major challenges beyond those faced with the cooling of individual racks of electronic packages.

To substantially guarantee proper operation and to extend the life of the electronic packages arranged in the racks of the data center, it is necessary to maintain the temperatures of the packages within predetermined safe operating ranges. Operation at temperatures above maximum operating temperatures may result in irreversible damage to the electronic packages. In addition, it has been established that the reliabilities of electronic packages, such as semiconductor electronic devices, decrease with increasing temperature. Therefore, the heat energy produced by the electronic packages during operation must thus be removed at a rate that

ensures that operational and reliability requirements are met. Because of the relatively large size of data centers and the high number of electronic packages contained therein, it is often expensive to cool data centers within the predetermined temperature ranges.

Data centers are typically cooled by operation of one or more air conditioning units. The compressors of the air conditioning units typically require a minimum of about thirty (30) percent of the required cooling capacity to sufficiently cool the data centers. The other components, such as condensers, air movers (fans), etc., typically require an additional twenty (20) percent of the required cooling capacity. For example, a high density data center with 100 racks, each rack having a maximum power dissipation of 10 KW, generally requires 1 MW of cooling capacity. Air conditioning units with a capacity of 1 MW of heat removal generally require a minimum of 300 KW input compressor power in addition to the power needed to drive the air moving devices, e.g., fans, blowers, etc.

Conventional data center air conditioning units do not vary their cooling output based on the distributed, location-specific needs of the data center. Typically, the distribution of work among the operating electronic components in the data center is random and is not controlled. Because of work distribution, some components in one location of the data center may be operating at a maximum capacity, while other components in another location of the data center may be operating at various power levels below a maximum capacity. Furthermore, conventional cooling systems typically operate at 100 percent of capacity on a continuous basis, thereby cooling all electronic packages, regardless of need. In other words, data centers are air conditioned on an overall, room-level basis, thereby yielding unnecessarily high operating expenses to sufficiently cool the heat generating components contained in the racks of data centers. Moreover, prior art attempts at cooling use relatively inaccurate and unsophisticated methods of monitoring and adjusting temperature distribution that result in less than optimal data center cooling efficiency.

BRIEF SUMMARY OF THE INVENTION

According to one embodiment of the present invention, there is provided a method of controlling atmospheric conditions within a building. The method includes the steps of supplying a conditioned fluid inside of the building and sensing one or more atmospheric parameters in various locations inside of the building. From the results of the sensing step, an empirical atmospheric map is then generated and compared to a template atmospheric map. Pattern differentials are identified between the empirical and template atmospheric maps, and corrective action is determined to reduce the pattern differentials. Finally, one or more of the quantity, quality, and distribution of the conditioned fluid is varied. According to another aspect of the present invention, there is provided a system for carrying out an embodiment of the method of the present invention.

BRIEF DESCRIPTION OF THE SEVERAL VIEWS OF THE DRAWINGS

Features and advantages of the present invention will become apparent to those skilled in the art from the following description with reference to the drawings, in which:

FIG. **1** is a schematic illustration of an embodiment of a system of the present invention; and

FIG. **2** is a flow chart of an embodiment of a method of the present invention.

DETAILED DESCRIPTION OF THE INVENTION

The present invention is not limited in its application to the details of any particular arrangement described or shown, since the present invention is capable of multitudes of embodiments without departing from the spirit and scope of the present invention. First, the principles of the present invention are described by referring to only a limited number of embodiments for simplicity and illustrative purposes. Although only a limited number of embodiments of the invention are particularly disclosed herein, one of ordinary skill in the art would readily recognize that the same principles are equally applicable to, and can be to implemented in all types of atmospheric control systems. Furthermore, numerous specific details are set forth to convey with reasonable clarity the inventor's possession of the present invention, how to make and/or use the present invention, and the best mode in carrying out the present invention known to the inventor at the time of application. It will, however, be apparent to one of ordinary skill in the art that the present invention may be practiced without limitation to these specific details. In other instances, well known methods and structures have not been described in detail so as not to unnecessarily obscure the present invention. Finally, the terminology used herein is for the purpose of description and not of limitation. Thus, the following detailed description is not to be taken in a limiting sense and the scope of the present invention is defined by the claims and their equivalents.

Generally in accord with the present invention, a method and related system are configured to control one or more atmospheric conditions within a building. More specifically, the method and system are configured to adjust one or more of the quantity, quality, and distribution of a conditioned fluid throughout a data center. The method and system are configured to accomplish such control based upon atmospheric mapping and pattern recognition; using as input, one or more atmospheric parameters measured at various, discrete sensor locations throughout the data center.

In accord with one embodiment of the present invention, the amount of energy typically required to cool a data center may be relatively reduced by strategically distributing cooling fluid, or conditioned air, within the data center by substantially favoring or increasing the cooling fluid flow to locations within the data center having racks that dissipate greater amounts of heat, and by substantially disfavoring or decreasing the cooling fluid flow to locations having racks that dissipate lesser amounts of heat. Thus, instead of operating devices, e.g., compressors, fans, etc., of the cooling system at substantially 100 percent of the anticipated heat dissipation from the racks, those devices may be operated according to the actual location and area specific cooling needs. In addition, the racks may be positioned throughout the data center according to their anticipated heat loads to thereby enable computer room air conditioning (CRAC) units located at various positions throughout the data center to operate in a more efficient manner. In another respect, the positioning of the racks and cooling strategy may be determined through implementation of modeling and metrology of the cooling fluid flow throughout the data center. In addition, the numerical modeling may be implemented to determine the volume flow rate and velocity of the cooling fluid flow through the data center.

Referring specifically in detail to the Figures, there is shown in FIG. **1** a schematic view of the system **10** that may be used in accordance with an embodiment of the present invention. The system **10** generally includes atmospheric sensors **12**, a central processing unit (CPU) **14**, and an atmospheric control system **16**. The atmospheric control system **16** can be a smart cooling system, exemplified by copending U.S. patent application Ser. No. 09/970,707, filed on Oct. 5, 2001, by Patel et al., assigned to the assignee hereof, and incorporated by reference herein in its entirety. Alternatively, it is contemplated that any type of system directed at controlling atmospheric conditions could be employed, including air-conditioner systems, humidifier systems, filtering systems, fire suppression systems, etc.

The atmospheric sensors **12** are used for measuring one or more atmospheric parameter and encompass temperature sensors, such as thermocouples, temperature transducers, thermistors, or the like. The atmospheric sensors **12** could also include humidity sensors, barometric or pressure sensors, fluid velocity sensors, particle sensors, smoke sensors, and the like. The atmospheric sensors **12** are located throughout the portions of a data center type of building (not shown) that are desired to be atmospherically controlled. Specifically, the atmospheric sensors **12** can be positioned in a variety of ways. For example, the atmospheric sensors **12** could be dispersed randomly in various locations and elevations, or aligned according to a predetermined coordinate grid, or placed in alignment with locations of vents and/or racks, or placed in accordance with the recommendations from a computational fluid dynamics model. In any case, it is contemplated that very large data centers, measured in the tens of thousands of square feet, may require thousands of atmospheric sensors **12** spread throughout. The atmospheric sensors **12** are electronically communicated with the CPU **14** either through wiring or via wireless telemetry. In any case, the CPU **14** is capable of keeping track of the location of each atmospheric sensor **12** such that the output of each can be "mapped".

The CPU **14** can be a stand-alone personal computer, a computer board or boards docked within one of the racks in the data center, a computer chip, etc., regardless, the CPU **14** includes various software that is loaded thereto. First, the CPU **14** includes software for generating maps of atmospheric conditions, such as thermal mapping software **18**. Thermal mapping software **18** is capable of processing thousands of input data points, such as thousands of sensor signals, and outputting map-like information. For example, a thermal map is composed of temperature contours that define various isothermal regions, or isotherms, of distinct temperatures. The most severe of these isotherms are commonly known as "hot spots". Hot spots may not necessarily correspond in exact location to any given temperature sensor, but may be located between various temperature sensors. Nevertheless, thermal mapping software can extrapolate or triangulate the location of the actual hot spot from the known locations of the temperature sensors. So, if temperature sensors are located in a range of elevations in various latitudinal and longitudinal coordinate positions of a data center, the thermal mapping software can triangulate not only the coordinate position of a hot spot, but also the elevation thereof. The temperature sensor readings provide temperature data and data for calculating temperature gradients, which are used to create a thermal map. In the absence of accurate or comprehensive temperature data, temperature gradients can be used to locate hot spots in the data center by mathematical optimization techniques like steepest gradient, etc. In general, triangulation presents a relatively accurate and efficient approximation technique and, thus, it is possible to use fewer, more sparsely distributed temperature sensors to save on equipment expense and failure modes if desired.

Second, the CPU **14** includes software for recognizing pattern differentials in such maps, more commonly known as pattern recognition software **20**. Such software basically involves a decoding process in which discriminations in patterns are made without human intervention. Third, strategic software **22** is loaded on the CPU **14** and is used to determine a course of corrective action to minimize or eliminate the pattern differentials by accepting output of the mapping software **18**, processing it, and outputting commands to the cooling system **16**. It is contemplated that commercial, general purpose mathematical optimization software like MATLAB could be adapted to generate thermal maps and identify hot spots by pattern recognition. It is also contemplated at this time that application-specific neural network algorithms can also be used to do the same.

In response, the cooling system **16** is used to vary one or more of the quantity, quality, and distribution of the cooling fluid used to cool the data center. The cooling system **16** encompasses a chiller unit **24**, but those skilled in the art will recognize that multitudes of other types of cooling systems are generally well-known and available for use with the present invention including, for example, refrigeration systems, cooling tower systems, cooler-condenser systems, and the like. In any case, the cooling system **16** also includes one or more variable-speed air movers or blowers **26**, and one or more remotely controlled dampers or vents **28**. Those skilled in the art will recognize that ventilation structure connecting the blower, vents, etc. are well known in the relevant art of Heating, Ventilating, and Air Conditioning (HVAC).

It is possible to vary any combination of cooling system control variables to change the quantity, quality, and/or distribution of the cooling fluid and thereby adjust the atmospheric conditions within the data center. For example, chiller cycle can be increased or decreased between 0% and 100% of operating capacity to change the cooling quality of the cooling fluid, i.e. temperature, humidity, particulate count, etc. To change the quantity of cooling fluid, such as conditioned air, the speed and/or baffling of the blower **26** can be adjusted, and the percentage opening of the vents **28** can be varied, either individually or collectively. Also, if the vents **28** include individual blowers (not shown), such blowers could also be adjusted in speed. To change the distribution of conditioned air, one or more of multiple chillers, blowers, and vents can be strategically adjusted to target one or more hot spot locations within the data center. For example, if one corner of the data center is demanding the most significant portion of the cooling needs of the entire data center, then the most proximate chiller(s), blower(s), and vent(s) can be selected, while the other, relatively distant chiller(s), blower(s), and vent(s) can be deactivated or reduced. It is contemplated that any other reasonably foreseen atmospheric control system control variables could also be adjusted.

Referring now to FIG. **2**, in addition to the embodiment described above, an embodiment of a method of the present invention involves cooperation of the CPU between the temperature sensors and the cooling system. The method of the present invention could also be practiced using other systems besides the one disclosed herein, and thus is not limited thereby. The system disclosed herein is simply one of many possible physical manifestations of the method. As discussed previously, the cooling system supplies a cooling fluid within the data center to cool the equipment within the data center, as shown in block **100**. In block **102**, the temperature within the data center is sensed in various locations and is communicated to the CPU.

The thermal mapping software converts the point-specific temperature sensor data into information by generating an empirical thermal map therefrom, as depicted in block **104**. As discussed above, a thermal map can triangulate hot spots from discrete sensor locations based on mathematical optimization techniques. Hot spots are known to arise in several situations, for example, where electronic packages in a given rack draw exceptional amounts of power due to exceptionally high usage of those packages, and the data center cooling system cannot supply enough conditioned fluid to alleviate the overheating. Hot spots may also arise when racks output normal amounts of heat, but the data center cooling system is malfunctioning in a specific location, or in general.

The thermal mapping step may be executed on an instantaneous, snapshot, or sampling basis but, alternatively, this step may be done on a real-time basis. It is also contemplated that the thermal map could be generated directly, without discrete temperature sensors, using thermography technology, based on infrared detection of heat that is emitted by the equipment in the data center. It is further contemplated that the thermal map could be generated by estimating temperature as a function of the power draw to the electronic packages and/or racks within the data center. Thus, the temperature sensing and map generating steps could be accomplished with thermographic equipment and software, or inferring temperature from power draw.

The thermal map also provides a powerful visual tool for a data center operator. A typical data center is a highly thermally interdependent environment where thermal performance of each electronic package of each rack affects performance of neighboring packages and racks to various orders of magnitude. Thus, a thermal map also provides a pictorially informative way of identifying the thermal interdependencies across the data center landscape.

As shown in block **106**, the pattern recognition software compares the empirical thermal map to a template thermal map. The template thermal map could also be termed a master, or model thermal map. The template basically represents a thermal map of an optimally operating data center cooling system. The template can be dynamic, generated either in real-time from current operating conditions, or can be static, generated prior to the comparing step **106**. Computational fluid dynamics (CFD) software tools, such as FLOVENT/AIRPACK, are widely available and known to those skilled in the art. The CFD tool accepts various inputs for modeling, including heat loads from the racks within the data center, velocity of the cooling fluid flowing throughout the data center, temperature, pressure, and the like in the data center. CFD modeling can be used in the design and layout of a data center, suggesting locations for racks and vents. Alternatively, CFD modeling can be used to output a master, template, or model thermal map to be emulated by adjusting cooling system variables. Instructive in this regard is U.S. patent application Ser. No. 10/076,635, filed on Feb. 19, 2002, and entitled "DESIGNING LAYOUT FOR INTERNET DATACENTER COOLING", by Nakagawa et al., assigned to the assignee hereof and incorporated by reference herein in its entirety.

After, or while, the empirical thermal map is compared to the model thermal map, the pattern recognition software is also applied to recognize pattern differentials therebetween, as depicted in block **108**. Pattern recognition is also commonly referred to as template matching, masking, etc. For example, in the case of data center cooling, thermal hot spots can be identified. Once identified, an initial classification step occurs as depicted by block **110**. Certain isotherms may

exceed a predetermined range of temperature, size, etc., and thus can be targeted for elimination or reduction. Alternatively, if all isotherms are within the predetermined range of temperature, size, etc., then the cooling system simply maintains current operating conditions and settings, as depicted in block **112**.

Upon recognizing the pattern differentials, the strategic software is used to determine the corrective action required to eliminate or at least reduce pattern differentials within the data center, as depicted in block **114**. Control variable data, such as the location of the vents, the capacity of the blower, and the capacity of the chiller, are used to determine how most efficiently to cool the data center. In addition, the thermal map data is also used, such as the location, size, and intensity of the isotherms. Specifically, the above-mentioned data sets are correlated to develop an optimally efficient course of corrective action.

In block **116**, based on the corrective action selected, one or more of the quantity, quality, and distribution of the conditioned fluid of the cooling system is varied. For example, if the size and/or intensity of an hot spot isotherm is relatively small, then the cooling system can merely adjust the opening size of the vent closest to the location of the isotherm. If, on the other hand, the size and/or intensity of an isotherm is relatively large, then multiple vents can be adjusted in addition to increasing the chiller cycle. Similarly, if the cooling system included multiple chillers, the chiller most proximate the isotherm could be increased in cycle. In general, the quantity and/or quality of the cooling fluid can be decreased, or maintained, for locations of the data center that exhibit pattern differentials within a predetermined acceptable range. In contrast, the quantity and/or quality of the cooling fluid may be increased for locations of the data center that exhibit pattern differentials outside of a predetermined acceptable range. Finally, the method is carried out such that the temperature sensing step through the step of varying the conditioned air can be a continuous loop.

Those of ordinary skill in the art will recognize that the present invention is capable of substantially reducing the energy consumption associated with cooling a data center, by virtue of using directed, location-specific cooling instead of diffused, room-level cooling. More particularly, the cooling system can be operated relatively more efficiently compared to the prior art by virtue of a more precise method of tracking and using actual temperature measurement as an input to cooling system control. In other words, the present invention provides methodology for extracting a large amount of discrete, location-specific temperature data points and converting same into more continuous, fluid-like information in the form of a thermal map. The present invention is suited for use with applications requiring thousands of sensors, or even just a few well-placed sensors. Regardless, the present invention enables use of the spaces between the sensor locations to be included in assessing or triangulating the locations, size, and intensity of hot spots, resulting in more accurate hot spot reduction than the prior art allows for. Therefore, compared to the prior art and for a given size data center, the present invention presents a more accurate and efficient cooling method, thus requiring fewer and smaller cooling devices and less energy consumption.

While the present invention has been described in terms of a limited number of embodiments, it is apparent that other forms could be adopted by one skilled in the art. In other words, the teachings of the present invention encompass any reasonable substitutions or equivalents of claim limitations. For example, other modes of carrying out the method steps could be used in addition to those described here, and the method could be practiced independently of the specific system disclosed herein. Those skilled in the art will appreciate that other applications, including those outside of data center cooling, are possible with this invention. Accordingly, the present invention is not limited to only cooling of data centers, but rather applies broadly to many other environmental control systems, including particulate filtering, HVAC, etc. Accordingly, the scope of the present invention is to be limited only by the following claims.

What is claimed is:

1. A method of controlling atmospheric conditions within a building, said method comprising the steps of:

supplying a conditioned fluid inside said building;

sensing at least one atmospheric parameter in a plurality of locations inside said building;

generating an empirical atmospheric map from the results of said sensing step;

comparing said empirical atmospheric map to a template atmospheric map; and

identifying pattern differentials between said empirical and template atmospheric maps.

2. The method as claimed in claim **1**, further comprising the steps of:

determining corrective action to reduce said pattern differentials; and

varying at least one of the quantity, quality, and distribution of said conditioned fluid in accord with said determining step.

3. The method as claimed in claim **2**, wherein said supplying step comprises the step of operating a system having at least one of a plurality of vents, at least one blower, and at least one source of conditioned air.

4. The method as claimed in claim **3**, wherein said determining step comprises correlating at least one of the location, size, and intensity of said pattern differentials to at least one of the location of said plurality of vents, the speed of said at least one blower, and the capacity of said at least one source of conditioned air.

5. The method as claimed in claim **4**, wherein said varying step comprises adjusting at least one of the opening of said plurality of vents, the speed of said at least one blower, and the output of said at least one source of conditioned air.

6. The method as claimed in claim **1**, wherein said generating step comprises using thermal mapping software to process input from said sensing step and to produce output in the form of said empirical atmospheric map.

7. The method as claimed in claim **1**, wherein said identifying step comprises using pattern recognition software.

8. The method as claimed in claim **1**, wherein said plurality of locations of said sensing step comprises locations at various elevations within said building.

9. The method as claimed in claim **1**, wherein said sensing step comprises using at least one of temperature sensors, humidity sensors, pressure sensors, particle sensors, smoke sensors, and velocity sensors.

10. The method as claimed in claim **1**, wherein the step of generating an empirical atmospheric map comprises generating a map composed of temperature contours that define various isothermal regions.

11. The method as claimed in claim **1**, wherein the step of identifying pattern differentials between said empirical and template atmospheric maps comprises performing at least one of extrapolation and triangulation to determine locations of one or more hot spots.

12. A method of cooling a data center having equipment therein, said method comprising the steps of:

supplying a cooling fluid within said data center to cool said equipment within said data center;

sensing temperature within said data center in a plurality of locations;

generating an empirical thermal map of said data center from the results of said sensing step;

comparing said empirical thermal map to a template thermal map; and

identifying pattern differentials between said empirical and template thermal maps.

13. The method as claimed in claim **12**, further comprising the steps of:

determining corrective action to reduce said pattern differentials; and

varying at least one of the quantity, quality, and distribution of said cooling fluid in accord with said determining step.

14. The method as claimed in claim **13**, wherein said supplying step comprises operating a system having at least one of a plurality of vents, at least one blower, and at least one source of conditioned air.

15. The method as claimed in claim **14**, wherein said determining step comprises correlating at least one of the location, size, and intensity of said pattern differentials to at least one of the location of said plurality of vents, the speed of said at least one blower, and the capacity of said at least one source of conditioned air.

16. The method as claimed in claim **15**, wherein said varying step comprises adjusting at least one of the opening of at least one of said plurality of vents, the speed of said at least one blower, and the output of said at least one source of conditioned air.

17. The method as claimed in claim **12**, wherein said generating step comprises using thermal mapping software to process input from said sensing step and to produce output in the form of said empirical atmospheric map, wherein said thermal mapping software triangulates locations of hot spots.

18. The method as claimed in claim **12**, wherein said identifying step comprises using pattern recognition software.

19. The method as claimed in claim **12**, wherein said plurality of locations of said sensing step comprises locations at various elevations within said data center.

20. The method as claimed in claim **12** wherein the step of generating an empirical atmospheric map comprises generating a map composed of temperature contours that define various isothermal regions.

21. The method as claimed in claim **12**, wherein the step of identifying pattern differentials between said empirical and template atmospheric maps comprises performing at least one of extrapolation and triangulation to determine locations of one or more hot spots.

22. A system for controlling atmospheric conditions within a building, said system comprising:

means for supplying a conditioned fluid inside said building;

means for sensing at least one atmospheric parameter in a plurality of locations inside said building;

means for generating an empirical atmospheric map from said means for sensing;

means for comparing said empirical atmospheric map to a template atmospheric map; and

means for identifying characteristics of pattern differentials between said empirical and template atmospheric maps, said characteristics comprising at least one of location, size, and intensity of said pattern differentials.

23. The system as claimed in claim **22**, further comprising:

means for determining corrective action to reduce said pattern differentials; and

means for varying at least one of the quantity, quality, and distribution of said conditioned fluid in accord with said means for determining corrective action.

24. The system as claimed in claim **23**, wherein said means for supplying comprises an air-conditioning system having at least one of a plurality of vents, at least one blower, and at least one source of conditioned air, further wherein said means for determining comprises means for correlating at least one of the location, size, and intensity of said pattern differentials to at least one of the respective location of said plurality of vents, the speed of said at least one blower, and the capacity of said at least one source of conditioned air, and also wherein said means for varying comprises means for adjusting at least one of said plurality of vents, said at least one blower speed, and said at least one source of conditioned air output, wherein said generating means triangulates hot spots from said sensing means.

* * * * *

UNITED STATES PATENT AND TRADEMARK OFFICE

CERTIFICATE OF CORRECTION

PATENT NO. : 6,718,277 B2
DATED : April 6, 2004
INVENTOR(S) : Sharma

It is certified that error appears in the above-identified patent and that said Letters Patent is hereby corrected as shown below:

Columns 8, 9 and 10,
Please replace claims 1, 12, 17, and 22 with the following claims:

1. A method of controlling atmospheric conditions within a building, said method comprising the steps of:
supplying a conditioned fluid inside said building;
sensing at least one atmospheric parameter in a plurality of locations inside said building;
generating an empirical atmospheric map from the results of said sensing step using software for processing input from said sensing step and for producing output in the form of said empirical atmospheric map;
comparing said empirical atmospheric map to a template atmospheric map; and
identifying pattern differentials between said empirical and template atmospheric maps.

12. A method of cooling a data center having equipment therein, said method comprising the steps of:
supplying a cooling fluid within said data center to cool said equipment within said data center;
sensing temperature within said data center in a plurality of locations;
generating an empirical thermal map of said data center from the results of said sensing step using software for processing input from said sensing step and for producing output in the form of said empirical thermal map; comparing said empirical thermal map to a template thermal map; and
identifying pattern differentials between said empirical and template thermal maps.

17. The method as claimed in claim 12, wherein said generating step comprises using thermal mapping software to process input from said sensing step and to produce output in the form of said empirical thermal map, wherein said thermal mapping software triangulates locations of hot spots.

22. A system for controlling atmospheric conditions within a building, said system comprising:
means for supplying a conditioned fluid inside said building;
means for sensing at least one atmospheric parameter in a plurality of locations inside said building;
means for generating an empirical atmospheric map from said means for sensing, wherein the means for generating comprises software for processing input from said means for sensing and for producing output in the form of said empirical atmospheric map;

UNITED STATES PATENT AND TRADEMARK OFFICE

CERTIFICATE OF CORRECTION

PATENT NO. : 6,718,277 B2
DATED : April 6, 2004
INVENTOR(S) : Sharma

It is certified that error appears in the above-identified patent and that said Letters Patent is hereby corrected as shown below:

Claim 22, cont'd.,

means for comparing said empirical atmospheric map to a template atmospheric map; and

means for identifying characteristics of pattern differentials between said empirical and template atmospheric maps, said characteristics comprising at least one of location, size, and intensity of said pattern differentials.

Signed and Sealed this

Sixteenth Day of November, 2004

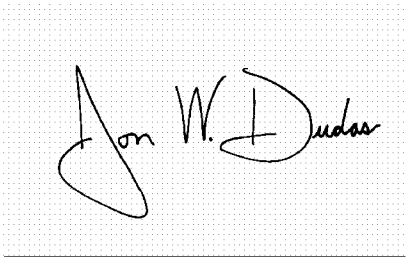

JON W. DUDAS
Director of the United States Patent and Trademark Office

Exhibit 2

US006854284B2

(12) **United States Patent**
Bash et al.

(10) **Patent No.: US 6,854,284 B2**
(45) **Date of Patent: Feb. 15, 2005**

(54) **COOLING OF DATA CENTERS**

(75) Inventors: **Cullen E. Bash**, San Francisco, CA (US); **Chandrakant D. Patel**, Fremont, CA (US); **Abdlmonem H. Beitelmal**, Sacramento, CA (US); **Ratnesh K. Sharma**, Union City, CA (US)

(73) Assignee: **Hewlett-Packard Development Company, L.P.**, Houston, TX (US)

(*) Notice: Subject to any disclaimer, the term of this patent is extended or adjusted under 35 U.S.C. 154(b) by 0 days.

(21) Appl. No.: **10/697,689**

(22) Filed: **Oct. 31, 2003**

(65) **Prior Publication Data**

US 2004/0075984 A1 Apr. 22, 2004

Related U.S. Application Data

(62) Division of application No. 10/262,879, filed on Oct. 3, 2002, now Pat. No. 6,773,997.

(51) **Int. Cl.**[7] **F25D 17/00**; F25D 23/12

(52) **U.S. Cl.** **62/180**; 62/259.2; 236/49.3; 454/245

(58) **Field of Search** 62/178, 180, 186, 62/89, 259.2; 236/49.3; 454/245, 253, 345, 347, 349, 352; 361/694, 695, 696

(56) **References Cited**

U.S. PATENT DOCUMENTS

4,874,127	A	10/1989	Collier	
5,345,779	A	9/1994	Feeney	
5,467,609	A	11/1995	Feeney	
5,718,628	A	2/1998	Nakazato et al.	
6,283,380	B1	9/2001	Nakanishi et al.	
6,374,627	B1	4/2002	Schumacher et al.	
6,412,292	B2	7/2002	Spinazzola et al.	
6,494,050	B2	12/2002	Spinazzola et al.	
6,557,357	B2	5/2003	Spinazzola et al.	
6,557,624	B1	5/2003	Stahl et al.	
6,574,104	B2	6/2003	Patel et al.	
6,574,970	B2	6/2003	Spinnazzola et al.	
6,616,524	B2 *	9/2003	Storck et al.	454/184
2004/0100770	A1 *	5/2004	Chu et al.	361/698

* cited by examiner

Primary Examiner—Marc Norman

(57) **ABSTRACT**

In a cooling system for cooling racks in a data center, cooling fluid is circulated in the data center by a cooling device having a fan. In addition, this system includes a plenum having a plurality of returns and an outlet. The outlet of the plenum is in fluid communication with the fan and the plurality of returns are configured for removing the cooling fluid from the data center. Furthermore, the returns and are operable to vary a characteristic of the removal of the cooling fluid.

35 Claims, 5 Drawing Sheets

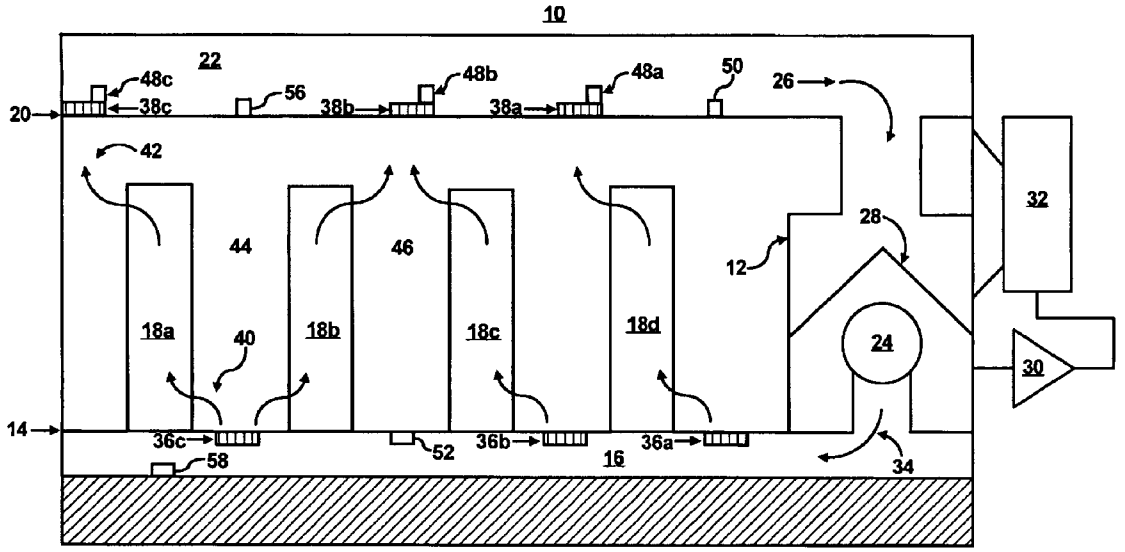

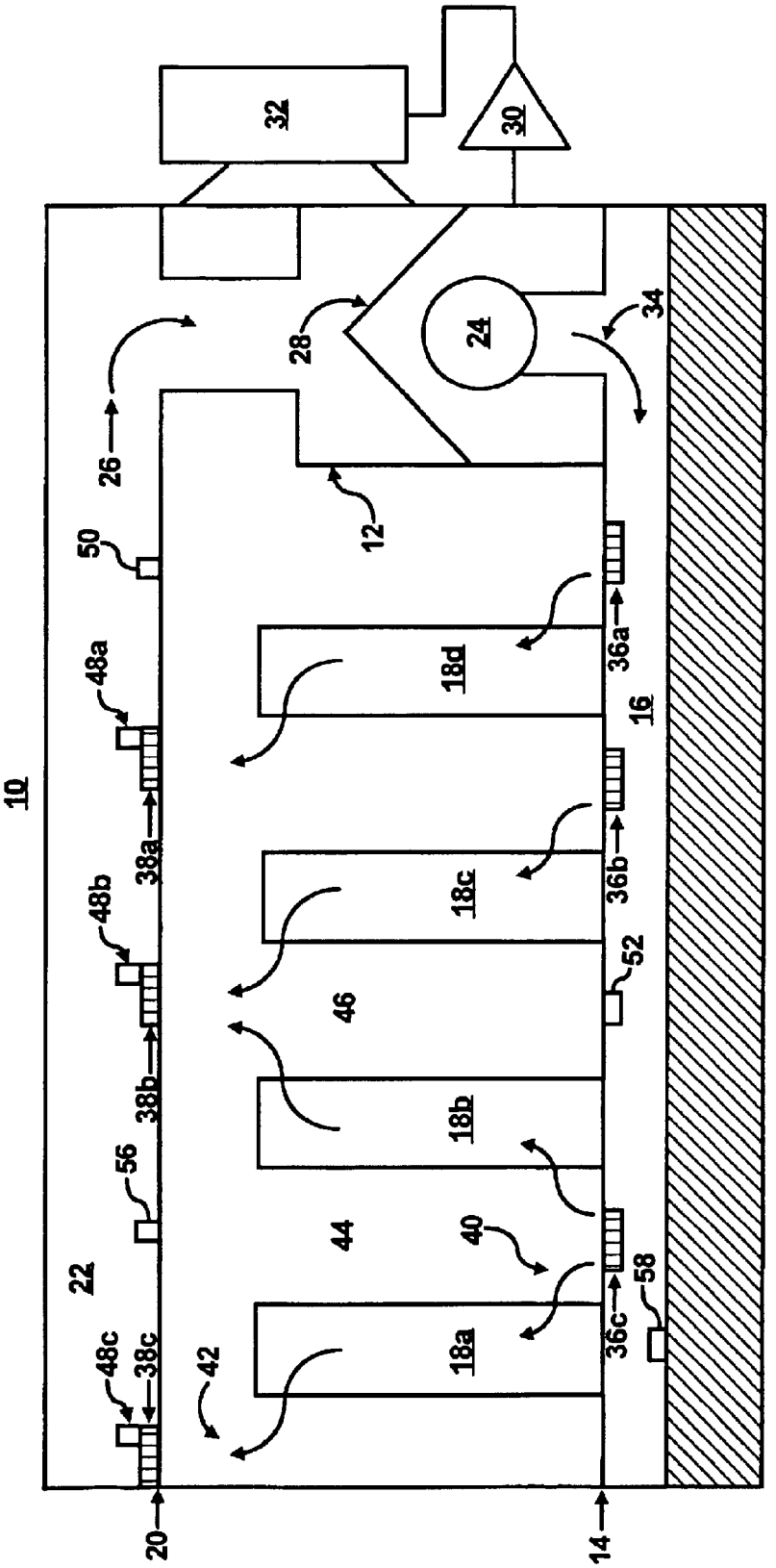
10
12
14
16
18a
18b
18c
18d
20
22
24
26
28
30
32
34
36a
36b
36c
38a
38b
38c
40
42
44
46
48a
48b
48c
50
52
56
58

FIG. 1

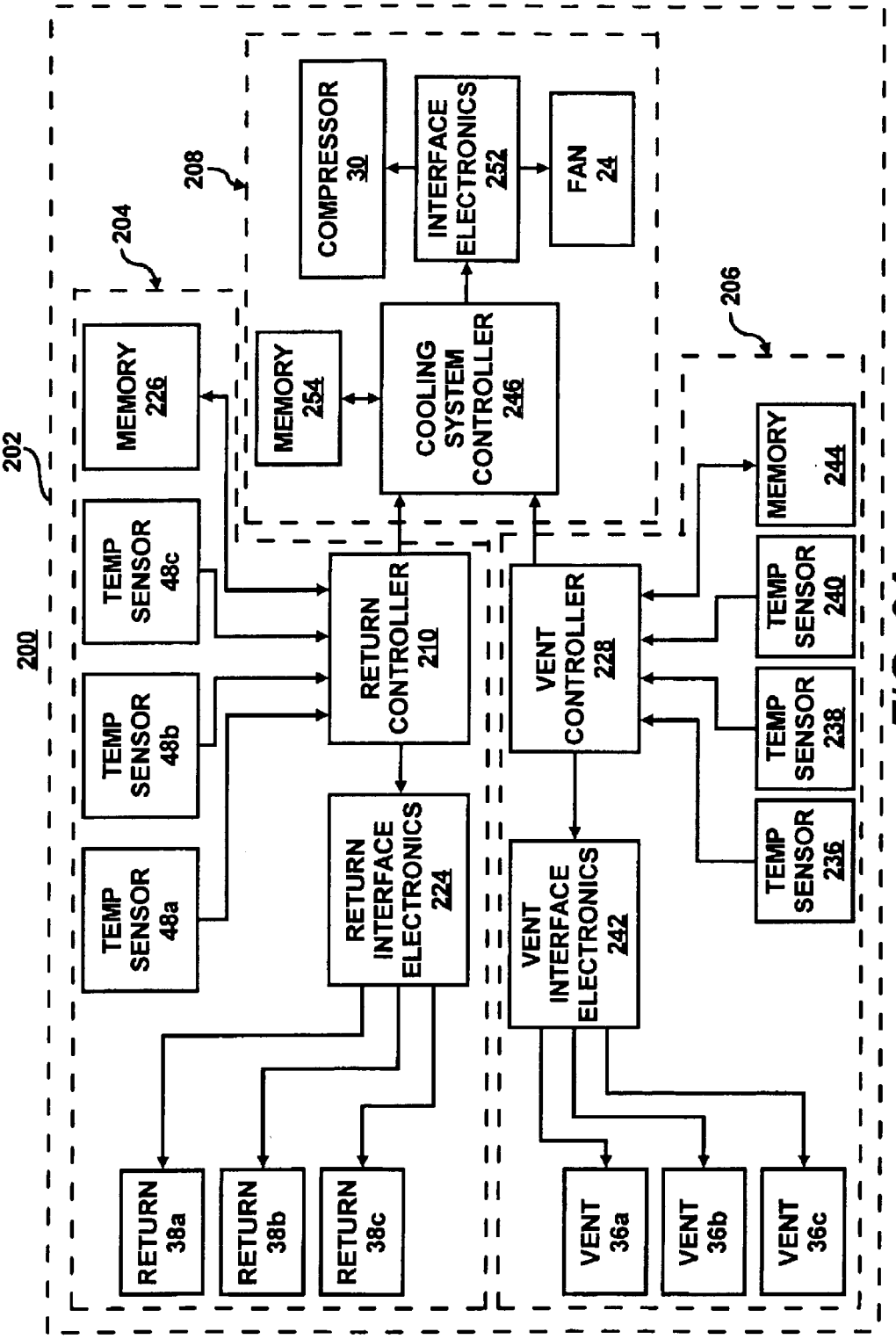
200
202
204
206
208
MEMORY 226
TEMP SENSOR 48c
TEMP SENSOR 48b
TEMP SENSOR 48a
MEMORY 254
COMPRESSOR 30
INTERFACE ELECTRONICS 252
FAN 24
COOLING SYSTEM CONTROLLER 246
RETURN CONTROLLER 210
RETURN INTERFACE ELECTRONICS 224
VENT CONTROLLER 228
VENT INTERFACE ELECTRONICS 242
MEMORY 244
TEMP SENSOR 240
TEMP SENSOR 238
TEMP SENSOR 236
RETURN 38a
RETURN 38b
RETURN 38c
VENT 36a
VENT 36b
VENT 36c

FIG. 2A

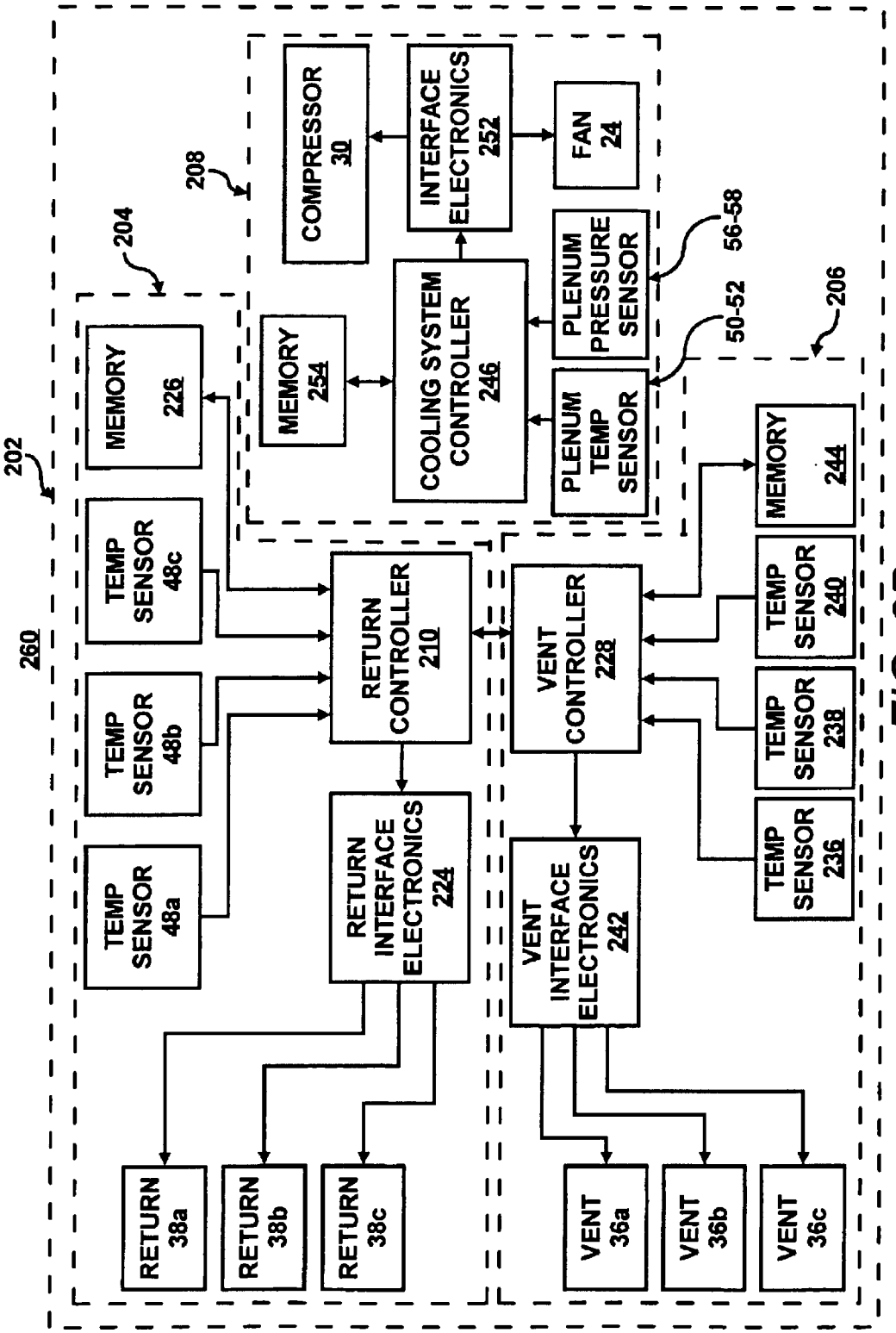
202
204
206
208
260
MEMORY 226
TEMP SENSOR 48a
TEMP SENSOR 48b
TEMP SENSOR 48c
RETURN CONTROLLER 210
RETURN INTERFACE ELECTRONICS 224
RETURN 38a
RETURN 38b
RETURN 38c
COMPRESSOR 30
INTERFACE ELECTRONICS 252
FAN 24
MEMORY 254
COOLING SYSTEM CONTROLLER 246
PLENUM PRESSURE SENSOR
PLENUM TEMP SENSOR
56-58
50-52
MEMORY 244
TEMP SENSOR 240
TEMP SENSOR 238
TEMP SENSOR 236
VENT CONTROLLER 228
VENT INTERFACE ELECTRONICS 242
VENT 36a
VENT 36b
VENT 36c

FIG. 2B

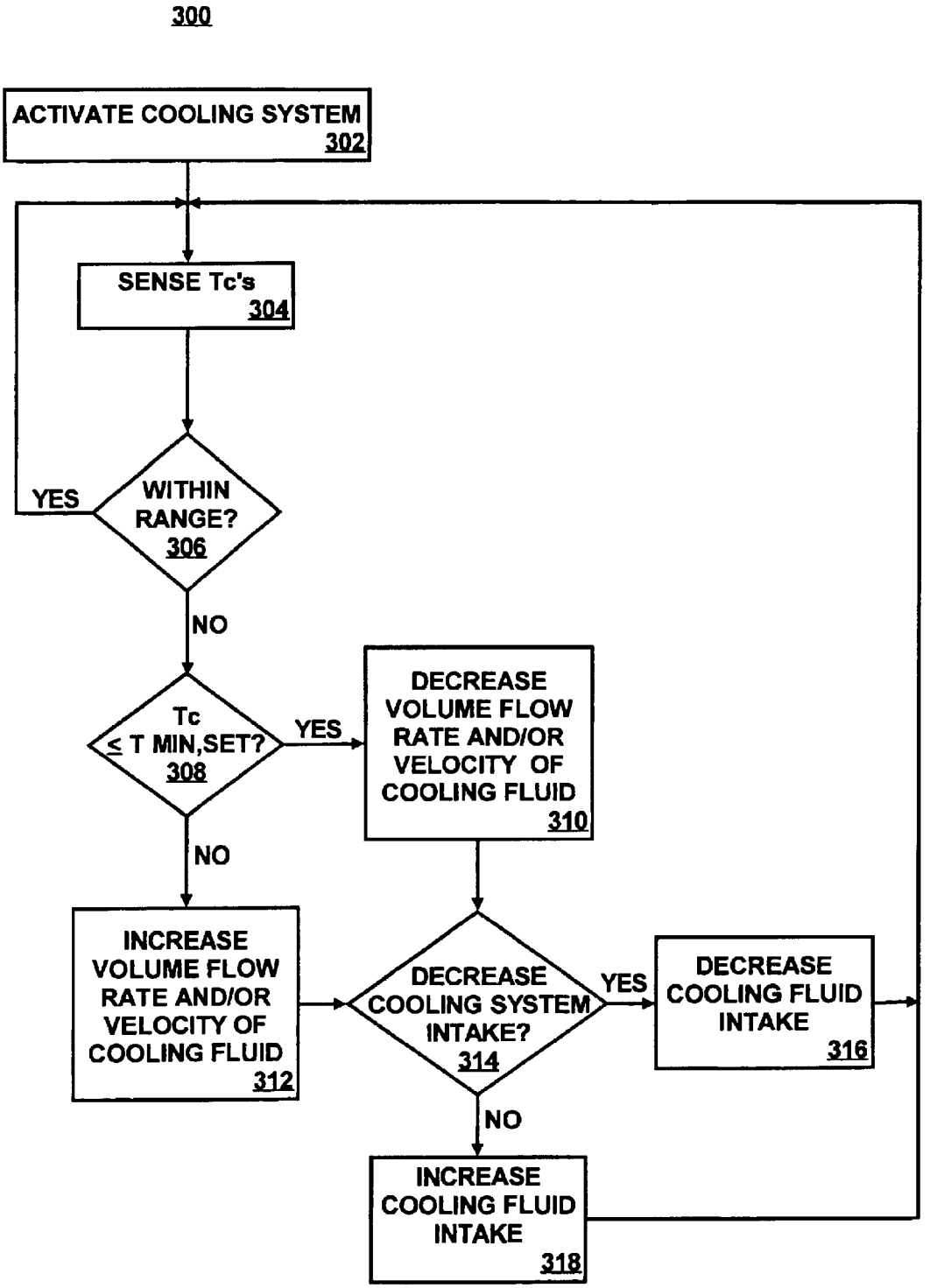
300
ACTIVATE COOLING SYSTEM 302
SENSE Tc's 304
WITHIN RANGE? 306
YES
NO
Tc ≤ T MIN,SET? 308
YES
NO
DECREASE VOLUME FLOW RATE AND/OR VELOCITY OF COOLING FLUID 310
INCREASE VOLUME FLOW RATE AND/OR VELOCITY OF COOLING FLUID 312
DECREASE COOLING SYSTEM INTAKE? 314
YES
NO
DECREASE COOLING FLUID INTAKE 316
INCREASE COOLING FLUID INTAKE 318

FIG. 3A

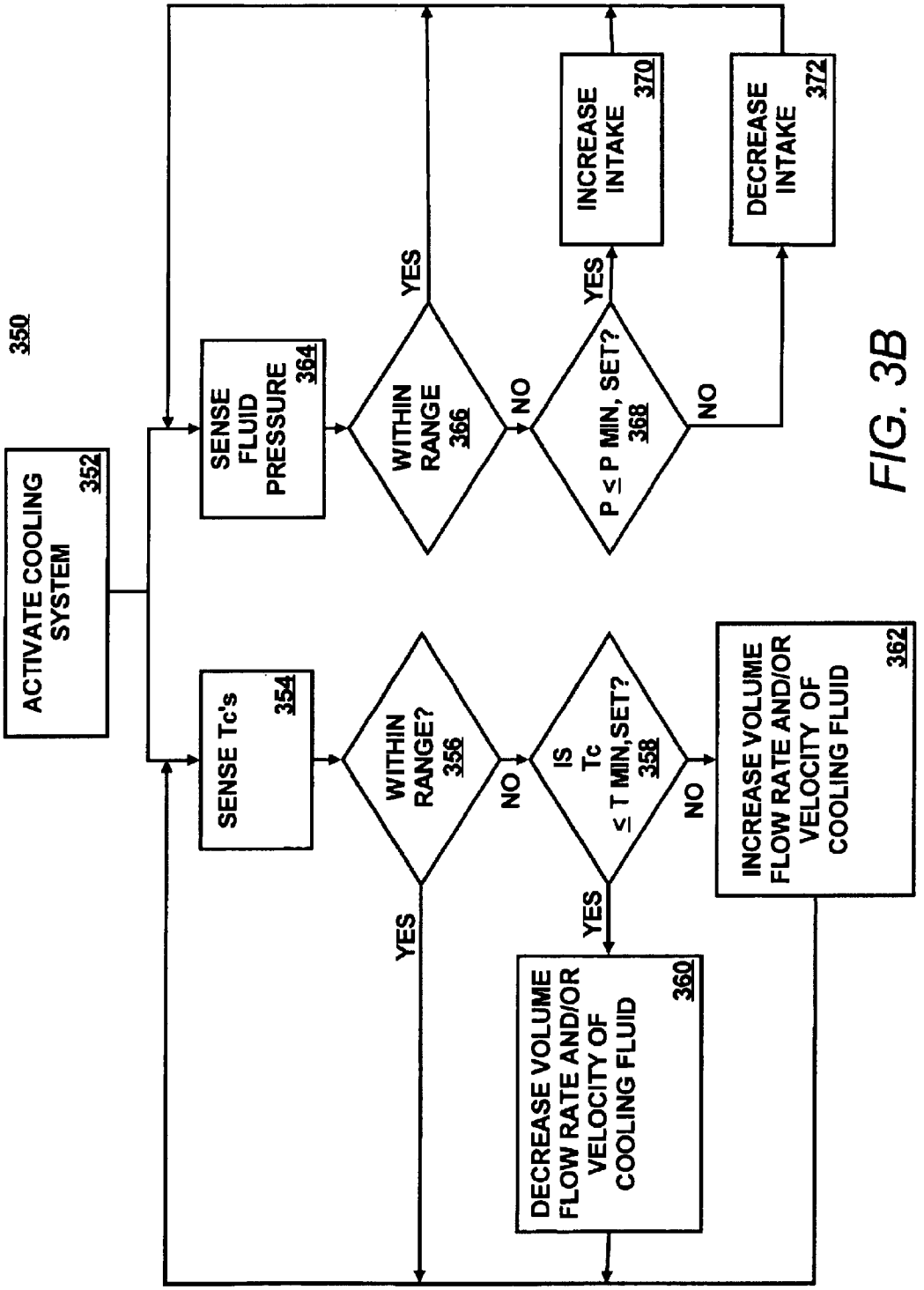
350
ACTIVATE COOLING SYSTEM 352
SENSE Tc's 354
WITHIN RANGE? 356
YES
NO
IS Tc ≤ T MIN,SET? 358
YES
NO
DECREASE VOLUME FLOW RATE AND/OR VELOCITY OF COOLING FLUID 360
INCREASE VOLUME FLOW RATE AND/OR VELOCITY OF COOLING FLUID 362
SENSE FLUID PRESSURE 364
WITHIN RANGE 366
YES
NO
P ≤ P MIN, SET? 368
YES
NO
INCREASE INTAKE 370
DECREASE INTAKE 372

FIG. 3B

COOLING OF DATA CENTERS

This is a divisional of application Ser. No. 10/262,879, filed Oct. 3, 2002, now U.S. Pat. No. 6,775,997.

BACKGROUND

A data center may be defined as a location, e.g., room, that houses numerous printed circuit (PC) board electronic systems arranged in a number of racks. A standard rack may be defined as an Electronics Industry Association (EIA) enclosure, 78 in. (2 meters) wide, 24 in. (0.61 meter) wide and 30 in. (0.76 meter) deep. Standard racks may be configured to house a number of PC boards, e.g., about forty (40) boards, with future configurations of racks being designed to accommodate up to eighty (80) boards. The PC boards typically include a number of components, e.g., processors, micro-controllers, high speed video cards, memories, semi-conductor devices, and the like, that dissipate relatively significant amounts of heat during the operation of the respective components. For example, a typical PC board comprising multiple microprocessors may dissipate approximately 250 W of power. Thus, a rack containing forty (40) PC boards of this type may dissipate approximately 10 KW of power.

The power required to remove the heat dissipated by the components in the racks is generally equal to about 10 percent of the power needed to operate the components. However, the power required to remove the heat dissipated by a plurality of racks in a data center is generally equal to about 50 percent of the power needed to operate the components in the racks. The disparity in the amount of power required to dissipate the various heat loads between racks and data centers stems from, for example, the additional thermodynamic work needed in the data center to cool the air. In one respect, racks are typically cooled with fans that operate to move cooling fluid, e.g., air, across the heat dissipating components; whereas, data centers often implement reverse power cycles to cool heated return air. The additional work required to achieve the temperature reduction, in addition to the work associated with moving the cooling fluid in the data center and the condenser, often add up to the 50 percent power requirement. As such, the cooling of data centers presents problems in addition to those faced with the cooling of racks.

Conventional data centers are typically cooled by operation of one or more air conditioning units. The compressors of the air conditioning units typically require a minimum of about thirty (30) percent of the required cooling capacity to sufficiently cool the data centers. The other components, e.g., condensers, air movers (fans), etc., typically require an additional twenty (20) percent of the required cooling capacity. As an example, a high density data center with 100 racks, each rack having a maximum power dissipation of 10 KW, generally requires 1 MW of cooling capacity. Air conditioning units with a capacity of 1 MW of heat removal generally requires a minimum of 300 KW input compressor power in addition to the power needed to drive the air moving devices, e.g., fans, blowers, etc. Conventional data center air conditioning units do not vary their cooling fluid output based on the distributed needs of the data center. Instead, these air conditioning units generally operate at or near a maximum compressor power even when the heat load is reduced inside the data center.

The substantially continuous operation of the air conditioning units is generally designed to operate according to a worst-case scenario. That is, cooling fluid is supplied to the

components at around 100 percent of the estimated cooling requirement. In this respect, conventional cooling systems often attempt to cool components that may not be operating at a level which may cause their temperatures to exceed a predetermined temperature range. In addition, conventional return systems remove air from the data centers in an indiscriminate manner. That is, conventional return systems may remove relatively cool air from data centers and/or may not efficiently remove relatively warm air from data centers. Consequently, conventional cooling systems often incur greater amounts of operating expenses than may be necessary to sufficiently cool the heat generating components contained in the racks of data centers.

SUMMARY

In accordance with an embodiment, the invention pertains to a cooling system for cooling racks in a data center. In this system, cooling fluid is circulated in the data center by a cooling device having a fan. In addition, this system includes a plenum having a plurality of returns and an outlet. The outlet of the plenum is in fluid communication with the fan and the plurality of returns are configured to remove the cooling fluid from the data center. Furthermore, the returns and are operable to vary a characteristic of the removal of the cooling fluid.

BRIEF DESCRIPTION OF THE DRAWINGS

Embodiments of the invention are illustrated by way of example and not limitation in the accompanying figures in which like numeral references refer to like elements, and wherein:

FIG. **1** shows a simplified schematic illustration of a data center containing a cooling system in accordance with an embodiment of the invention;

FIGS. **2**A and **2**B illustrate block diagrams of respective control schemes for cooling systems according to various embodiments of the invention; and

FIGS. **3**A and **3**B show flow diagrams of a first and second manner in which embodiments of the invention may be practiced.

DETAILED DESCRIPTION

For simplicity and illustrative purposes, the principles of the invention are described by referring mainly to an embodiment thereof. In the following description, numerous specific details are set forth in order to provide a thorough understanding of the invention. It will be apparent however, to one of ordinary skill in the art, that the invention may be practiced without limitation to these specific details. In other instances, well known methods and structures have not been described in detail so as not to unnecessarily obscure the invention.

According to an embodiment of the invention, a cooling system is configured to adjust cooling fluid (e.g., air, other gasses, liquid, etc.) flow to and/or from various racks located throughout a data center, e.g., a location that houses numerous printed circuit (PC) board electronic systems arranged in a number of racks, based upon the detected or anticipated temperatures at various locations throughout the data center. In one respect, by substantially increasing the cooling fluid flow to and/or from those racks dissipating greater amounts of heat and by substantially decreasing the cooling fluid flow to and/or from those racks dissipating lesser amounts of heat, the amount of energy required to operate the cooling system may be relatively reduced. Specifically, by modify-

ing the return flow rate of cooling fluid, relatively hot fluid may be removed from the data center while relatively cooler fluid may be allowed to remain. Thus, instead of operating the devices, e.g., compressors, fans, etc., of the cooling system at substantially 100 percent of the anticipated heat dissipation from the racks, those devices may be operated according to the actual cooling needs. In addition, the racks may be positioned throughout the data center according to their anticipated heat loads to thereby enable computer room air conditioning (CRAC) units located at various positions throughout the data center to operate in a more efficient manner. In another respect, the positioning of the racks may be determined through implementation of modeling and metrology of the cooling fluid flow throughout the data center. In addition, the numerical modeling may be implemented to determine the volume flow rate and velocity of the cooling fluid flow through each of the vents. Furthermore, the numerical modeling may be implemented to determine the volume flow rate and velocity of the return cooling fluid flow through each of the return vents.

FIG. **1** shows a simplified schematic illustration of a data center **10** containing a cooling system **12**. The data center **10**, according to this embodiment of the invention, includes a raised floor **14**. A plurality of wires and communication lines (not shown) may be located in a space **16** beneath the raised floor **14**. In addition, the space **16** may function as a plenum to deliver cooling fluid (e.g., air) from the cooling system **12** to a plurality of racks **18***a*–**18***d*. The data center **10** may further include a lowered ceiling **20**. In a manner similar to the raised floor **14**, the lowered ceiling **20** may include a space **22** in which a plurality of wires and communication lines (not shown) may be located. In addition, the space **22** may function as a plenum to return air to the cooling system **12**. Although the data center **10** is illustrated in FIG. **1** as containing four racks **18***a*–**18***d* and a cooling system **12**, it should be understood that the data center may include any number of racks, e.g., 100 racks, and cooling systems, e.g., four or more. The illustration of four racks is for illustrative and simplicity of description purposes only and is not intended to limit the invention in any respect.

The racks **18***a*–**18***d* generally house a plurality of components (not shown), e.g., processors, micro-controllers, high speed video cards, memories, semi-conductor devices, and the like. The components may be elements of a plurality of subsystems (not shown), e.g., computers, servers, etc. The subsystems and the components may be implemented to perform various electronic, e.g., computing, switching, routing, displaying, and the like, functions. In the performance of these electronic functions, the components, and therefore the subsystems, generally dissipate relatively large amounts of heat. Because racks **18***a*–**18***d* have been generally known to include upwards of forty (40) or more subsystems, they may transfer substantially large amounts of heat to the cooling fluid to maintain the subsystems and the components generally within a predetermined operating temperature range.

As this air is heated in the vicinity of the racks **18***a*–**18***d*, it may expand and create a localized area of relatively high pressure. This may inhibit movement of relatively cool incoming air. To compensate for this phenomenon, conventional cooling systems may cool surrounding areas below the predetermined operating range. However, this may be inefficient because relatively more energy may be utilized to cool these surrounding areas below the predetermined operating range than would otherwise be required in a system with sufficient air movement. Furthermore, if the relatively hot air is drawn into the racks **18***a*–**18***d*, it may not have sufficient cooling potential to maintain the subsystems and the components generally within the predetermined operating temperature range. Therefore, according to one aspect of an embodiment of the invention, by substantially controlling the amount of heated cooling fluid (e.g., heated air, return air, etc.) removed from the general vicinity of the components and the subsystems located in the racks **18***a*–**18***d* based upon their respective heat loads, the power consumed by the cooling system **12** to maintain the components at predetermined operating temperatures may also be controlled.

The cooling system **12** generally includes a fan **24** for supplying cooling fluid (e.g., air) into the space **16** (e.g., plenum) and/or drawing air from the space **22** (e.g., plenum). Air, heated in the data center **10** is supplied to the fan **24** from the space **22** as indicated by an arrow **26**. In operation, the heated air (e.g., return air) enters into the cooling system **12** as indicated by the arrow **26** and is cooled by operation of a cooling coil **28**, a compressor **30**, and a condenser **32**, in any reasonably suitable manner generally known to those of ordinary skill in the art. In terms of cooling system efficiency, it is generally desirable that the return air is composed of the relatively warmest portion of air in the data center **10**.

Although reference is made throughout the present disclosure of the use of a fan **24** to draw heated air from the space **22**, it should be understood that any other reasonably suitable manner of air removal may be implemented without departing from the scope of the invention. By way of example, a separate fan (not shown) may be provided to draw air from the space **22**. Alternatively, the intakes of the space **22** may be provided with fans (not shown) such that each intake may draw a substantially independent amount of air from the data center **10**.

In addition, based upon the cooling fluid needed by the heat loads in the racks **18***a*–**18***d*, the cooling system **12** may be operated at various levels. For example, the capacity (e.g., the amount of work exerted on the refrigerant) of the compressor **30** and the speed of the fan **24** may both be modified to thereby control the temperature and the amount of cooling fluid flow delivered to the racks **18***a*–**18***d*. In this respect, the compressor **30** is a variable capacity compressor and the fan **24** is a variable speed fan. The compressor **30** may thus be controlled to either increase or decrease the mass flow rate of a refrigerant therethrough. Because the specific type of compressor **30** and fan **24** to be employed with the embodiments of the invention may vary according to individual needs, the invention is not limited to any specific type of compressor or fan. Instead, any reasonably suitable type of compressor **30** and fan **24** that are capable of accomplishing certain aspects of the invention may be employed with the embodiments of the invention. The choice of compressor **30** and fan **24** may depend upon a plurality of factors, e.g., cooling requirements, costs, operating expenses, etc.

The cooling fluid generally flows from the fan **24** and into the space **16** (e.g., plenum) as indicated by the arrow **34**. The cooling fluid flows out of the raised floor **14** through a plurality of dynamically controllable vents **36***a*–**36***c* that generally operate to control the velocity and the volume flow rate of the cooling fluid therethrough. A more detailed description of the above-described embodiment may be found in co-pending U.S. application Ser. No. 09/970,707, filed Oct. 5, 2001, which is assigned to the assignee of the present invention and is incorporated by reference herein in its entirety.

The cooling fluid may absorb dissipated heat as it flows through the racks **18***a*–**18***d*. This heated cooling fluid may

flow into the lowered ceiling through a plurality of dynamically controllable returns **38***a*–**38***c* that generally operate to control the velocity, direction, and the volume flow rate of the heated cooling fluid therethrough. In one respect, the velocity and the volume flow rate of the cooling fluid may be regulated by varying the shape and/or opening size of the vents **36***a*–**36***c* and/or the returns **38***a*–**38***c*. In another respect, the direction from which the cooling fluid is received may also be varied. For example, louvers within the returns **38***a*–**38***c* (not specifically shown in FIG. **1**) may be modified to vary the intake of the heated cooling fluid therethrough. In yet another respect, fans within the returns **38***a*–**38***c* (not specifically shown in FIG. **1**) may be configured to vary the volume flow rate and/or velocity of the heated cooling fluid therethrough. Thus, according to this embodiment of the invention, the racks **18***a*–**18***d* may receive substantially individualized and localized amounts of cooling fluid according to their heat loads. In addition, the removal of the heated cooling fluid in the vicinity of the racks **18***a*–**18***d* may be substantially individualized according to the localized heat load.

The arrows **40** indicate the general direction of travel of the cooling fluid and the dashed arrows **42** indicate the general direction of travel of fluid heated by the heat dissipating components located within the racks **18***a*–**18***d*. As may be seen in FIG. **1**, the areas between the racks **18***a*–**18***d* may comprise either cool aisles **44** or hot aisles **46**, or a combination thereof. The cool aisles **44** are those aisles that include the vents **36***a*–**36***c* and thus receive cooling fluid for delivery to the racks **18***a*–**18***d*. The hot aisles **46** are those aisles that receive air heated by the heat dissipating components in the racks **18***a*–**18***d*. The returns **38***a*–**38***c* may be positioned to remove air from the hot aisles **46**. In this regard, the returns **38***a*–**38***c* may remove relatively more heated fluid from the hot aisles **46**. Thus, reducing the lifetime of relatively hot air particles within the data center **10** and the likelihood of these hot air particles being drawn back into the racks **18***a*–**18***d*.

In addition, various sections of each of the racks **18***a*–**18***d* may also receive substantially individualized amounts of cooling fluid. By way of example, if the bottom halves of the racks **18***a* and **18***b* are operating at maximum power, thereby dissipating a maximum level of heat load, and the upper halves are operating at little or no power, the vent **36***c*, the return **38***c*, and/or the return **38***b* may be configured to enable cooling fluid flow therethrough to have a relatively high volume flow rate with a relatively low velocity. In this manner, the cooling fluid may operate to generally supply greater cooling to the lower halves of the racks **18***a* and **18***b*, whereas the upper halves receive relatively lesser amounts of cooling fluid. In addition, if the upper halves of the racks **18***c* and **18***d* are operating at approximately 50 percent of their maximum power, and the lower halves are operating at little or no power, the vent **34***b* and/or the return **38***a* may be configured to enable cooling fluid flow therethrough to have a relatively low volume flow rate with a relatively high velocity. In this manner, the cooling fluid flow may have sufficient momentum to adequately reach and cool the upper halves of the racks **18***c* and **18***d*.

Moreover, as the cooling requirements vary according to the heat loads in the racks **18***a*–**18***d*, and the subsequent variations in the volume flow rate of the cooling fluid, the cooling system **12** may also vary the amount of cooling fluid supplied to the racks. As an example, if the heat load in the racks **18***a*–**18***d* generally increases, the cooling system **12** may operate to increase the supply of cooling fluid and/or the return of heated fluid. Alternatively, if the heat load in the racks **18***a*–**18***d* generally decreases, the cooling system **12** may operate to decrease the supply of cooling fluid and/or the return of heated fluid. The vents **36***a*–**36***c* thus generally provide localized control of the cooling fluid flow to the racks **18***a*–**18***d* and the returns **38***a*–**38***c* generally provide localized control of the heated fluid flow back to the cooling system **12**. In this regard, the cooling system **12** generally provides global control of the cooling fluid flow and/or the heated fluid flow. In one respect, therefore, the amount of energy consumed by the cooling system **12** in maintaining the racks **18***a*–**18***d* at a predetermined temperature range may be substantially reduced in comparison with conventional data center cooling systems.

According to an embodiment of the invention, the flow of heated fluid through the returns **38***a*–**38***c* may be modified in response to the temperature of the fluid at and/or near each of the returns **38***a*–**38***c*. In this respect, each of the returns **38***a*–**38***c* may include a respective temperature sensor **48***a*–**48***c*. For example, in response to the temperature sensor **48***a* detecting a high temperature, relative to a predetermined temperature and/or the other temperature sensors **48***b*–**48***c*, the return **38***a* may be modified to increase the flow of heated fluid therethrough.

In addition, the capacity of the compressor **30** may vary according to changes in the temperature of the returned heated fluid. As such, the temperature sensors **48***a*–**48***c* may relay temperature measurements to the cooling system **12**. The temperature sensors **48***a*–**48***c* may comprise any reasonably suitable temperature sensor known to those skilled in the art. Therefore, the compressor **30** may be operated to generally maintain the temperature of the heated fluid within each of the returns **38***a*–**38***c* at a substantially constant level. In addition, the capacity of the compressor **30** may also vary according to detected and/or anticipated changes in heat loads generated in the racks **18***a*–**18***d*, the flow rates of the vents **36***a*–**36***c* and/or the returns **38***a*–**38***c*, and/or various sensed pressures within the data center **10**. As an example, the compressor **30** capacity may be increased as the heat loads generated in the racks **18***a*–**18***d* increase. In this regard, the power required to operate the compressor **30** may be substantially optimized, thereby reducing the total power required to operate the cooling system **12**.

According to an embodiment of the invention, the flow of heated fluid through the returns **38***a*–**38***c* may be modified in response to the flow of the cooling fluid supply through the vents **36***a*–**36***c*. For example, in response to the vent **36**a being modified to increase the flow of the cooling fluid therethrough, the return **38***a* may, in a similar manner, be modified to increase the flow of heated fluid. By way of example, the flow rates of the cooling fluid across corresponding vents **36***a*–**36***c* and returns **38***a*–**38***c* may be measured (e.g., either directly or by measuring pressure drop and using a suitable correlation) and synchronized. The flow rates of the vents **36***a*–**36***c* may be determined by measuring temperature in the room, for instance, and the flow rates of the returns **38***a*–**38***c* can be set to equal the flow rates of the vents **36***a*–**36***c*. If the flow rates are relatively matched, or some correlation between them utilized, the recirculation of hot air in the room may be reduced as well as mixing of the hot air and the cooler cooling fluid, to thereby improve system efficiency. In this respect, the returns **38***a*–**38***c* may control the flow of return air based on the operation of the vents **36***a*–**36***c*. Thus, only that amount of energy required to substantially cool the components contained in the racks **18***a*–**18***d* may be expended, which may correlate to a substantial energy savings over known cooling systems.

The capacity of the compressor **30** may vary according to changes in the temperature of the return air located in the

space **22**. As such, a plenum temperature sensor **50** may be located within the space **22** to relay temperature measurements to the cooling system **12**. The plenum temperature sensor **50** may comprise any reasonably suitable temperature sensor known to those skilled in the art. Therefore, the compressor **30** may be operated to generally maintain the temperature of the return air within the space **22** at a substantially constant level. Similarly, it is within the scope of the invention that the capacity of the compressor **30** may vary according to changes in the temperature of the air located in the space **16**. As such, a plenum temperature sensor **52** may be located within the space **16** to relay temperature measurements to the cooling system **12**. In addition, the capacity of the compressor **30** may also vary according to detected and/or anticipated changes in heat loads generated in the racks **18***a*–**18***d*. As an example, the compressor **30** capacity may be increased as the heat loads generated in the racks **18***a*–**18***d* increase. In this regard, the power required to operate the compressor **30** may be substantially optimized, thereby reducing the total power required to operate the cooling system **12**.

As discussed above, the fan **24** is a variable speed fan. In this regard, it is within the scope of the invention that the speed of the fan **24** be modifiable based on a variety of factors. For example, in an embodiment of the invention, a pressure sensor **56** may be configured to measure the pressure of the returning cooling fluid in the space **22** and relay these measurements to the cooling system **12**. In another embodiment, a pressure sensor **58** may be configured to measure the pressure of the cooling fluid in the space **16** and relay these measurements to the cooling system **12**. Based on the pressure measurements from the pressure sensor **56** and/or **58** the speed of the fan **24** may be varied. In this manner, the power required to operate the fan **24** may be substantially optimized, thereby reducing the total power required to operate the cooling system **12**.

In addition, the discussion above describes the inclusion of temperature and pressure sensors. However, it is within the scope of various embodiments of the invention that any reasonable type of sensor be included. In general, these sensors may be operable to sense or measure environmental conditions (e.g., temperature, pressure, humidity, wind speed, etc.) and relay data related to the sensed (or measured) environmental condition to the cooling system **12**. Specific environmental conditions which these types of sensors may be utilized to detect include, but are not limited to: temperature, pressure, humidity, and fluid flow rate. These sensors may be positioned at various locations within the data center **10**. For example, sensors may be placed in the racks, vents, returns, plenums, or the like.

Referring to FIG. **2**A, there is illustrated a block diagram **200** of a control scheme for a cooling system **202** according to an embodiment of the invention. The following description of the block diagram **200** is one manner in which the cooling system **202** may be operated. In this respect, it is to be understood that the following description of the block diagram **200** is but one manner of a variety of different manners in which such a cooling system **202** may be operated. According to this embodiment of the invention, the cooling system **202** includes a return unit **204**, a vent unit **206**, and a heat exchange unit **208**.

The return unit includes a return controller **210** generally configured to control the operation of returns **38***a*–**38***c*. In this regard, the return controller **210** may comprise a microprocessor, a micro-controller, an application specific integrated circuit (ASIC), and the like. In an embodiment of the invention, the manner in which the return controller **210** operates the returns **38***a*–**38***c*, i.e., the flow of return air therethrough, may be predicated upon the detected or anticipated temperatures of the racks **18***a*–**18***d* or portions thereof. For example, with regard to detected temperatures, a plurality of temperature sensors **48***a*–**48***c*, e.g., thermocouples, may be positioned at various positions around the subsystems and/or the racks **18***a*–**18***d*. Each of the temperature sensors **48***a*–**48***c* may correspond to a respective one of the returns **38***a*–**38***c*. By way of example, one temperature sensor **48***a* may affect the return flow of cooling fluid flow through one return **38***a*. Alternatively, with regard to anticipated temperatures, anticipated cooling requirements for each of the racks **18***a*–**18***d* and/or various sections of the racks may be predicated upon an impending load on the racks **18***a*–**18***d* and/or sections of the racks. For example, the return controller **210** may be connected to another controller, e.g., a central controller for the subsystems, which anticipates the heat load the components and/or the subsystems will dissipate. This information may be relayed to the return controller **210** which may then manipulate the returns **38***a*–**38***c* according to the anticipated load.

In addition to and/or in another embodiment of the invention, the manner in which the return controller **210** operates the returns **38***a*–**38***c* may be predicated upon the detected (e.g., sensed, measured, etc.) or calculated flow rate of the vents **36***a*–**36***c* or portions thereof. For example, with regard to detected flow rates, a plurality of flow sensors (not shown), may be positioned in or near the vents **36***a*–**36***c*. Each of the flow sensors may correspond to a respective one of the returns **38***a*–**38***c* and in a manner similar to above, may affect the return flow of cooling fluid flow through one return **38***a*–**38***c*. Alternatively, the flow rate may be calculated by correlating another sensed environmental condition, such as pressure change across each vent **36***a*–**36***c*, with the flow rate. This information may be relayed to the return controller **210** which may then manipulate the returns **38***a*–**38***c* according to the calculated flow.

Although FIG. **2**A illustrates three temperature sensors **48***a*–**48***c* connected to the return controller **210**, it should be understood that the number of temperature sensors is not critical to the operation of the various embodiments of the invention. Instead, the cooling system **202** may include any reasonably suitable number of temperature sensors to thus measure the temperatures of any reasonably suitable number of racks **18***a*–**18***d* or portions thereof. The number of temperature sensors and the temperature measurements of the number of racks may be upgradable, e.g., scalable, to include any additional components and/or racks that may be included in the data center. In addition, the temperature sensors need not be stationary. In this regard, according to another embodiment of the invention, a mobile device (not shown) is implemented to gather or measure at least one local environmental condition (e.g., temperature, pressure, air flow, humidity, etc.) in the data center **10**. More particularly, the mobile device is configured to travel around the racks to determine the one or more environmental conditions at various locations throughout the data center. In addition, the device may be configured to detect the one or more environmental conditions at various heights throughout the data center. The information gathered by the mobile device may be transmitted to the cooling system **202**. As described hereinbelow, a controller within the cooling system **202** may vary the delivery and temperature of cooling fluid according to the one or more detected environmental conditions. In this respect, the energy necessary to cool the racks and the components contained therein, may substantially be optimized.

A more detailed description of the above-described embodiment may be found in co-pending U.S. application Ser. No. 10/157,892, filed May 31, 2002, which is assigned to the assignee of the present invention and is incorporated by reference herein in its entirety.

If there is an actual detected change or an anticipated change in the temperature of the respective racks **18***a*–**18***d* and/or portions thereof, the return controller **210** generally operates to manipulate the corresponding return **38***a*–**38***c* to compensate, i.e., changes the volume flow rate, velocity, and other similar characteristics of the cooling fluid, for the change in temperature. In this respect, heated cooling fluid may be removed from the vicinity of each of the racks **18***a*–**18***d* and/or portions thereof substantially only as necessary to maintain the temperature of the portions of the racks within a predetermined temperature range. As will be seen from the discussion hereinbelow, by controlling the cooling fluid flow in this manner, the compressors **30** and fans **24** may be operated at substantially optimized levels, thereby decreasing the amount of energy and thus the operating costs required to operate these devices.

Return interface electronics **224** may be provided to act as an interface between the return controller **210** and the components, e.g., control the opening in the returns **38***a*–**38***c* and the return flow through the returns **38***a*–**38***c*.

The return controller **210** may also be interfaced with a return memory **226** configured to provide storage of a computer software that provides the functionality of the cooling system and may be executed by the return controller **210**. The memory **226** may also be configured to provide a storage for containing data/information pertaining to the manner in which each of the returns **38***a*–**38***c* may be manipulated in response to the detected and/or anticipated temperatures of the portions of the racks **18***a*–**18***d*. In keeping with the example cited hereinabove, the return controller **210** may operate the return **38***a* to increase the volume flow rate and decrease the velocity of the cooling fluid flowing therethrough in response to a detected increase in the heat load of a lower portion of a corresponding rack. The memory **226** may be implemented as a combination of volatile and non-volatile memory, such as dynamic random access memory (DRAM), EEPROM, flash memory, and the like.

The vent unit **206** may be configured to operate in a manner similar to the return unit **204**. In this regard, the vent unit **206** may include a vent controller **228**, vents **36***a*–**36***c*, temperature sensors **236**–**240**, vent interface electronics **242** and a memory **244**. With respect to the temperature sensors **236**–**240**, in an embodiment of the invention, these sensors may be the temperature sensors **48***a*–**48***c* configured to relay temperature measurements to both the return controller **210** and the vent controller **228**. In various other embodiments of the invention, the temperature sensors **236**–**240** may be distinct from the temperature sensors **48***a*–**48***c*. In these various other embodiments, the temperature sensors **236**–**240** may be placed in or around the racks **18***a*–**18***d* and/or the vents **36***a*–**36***c*.

The vent controller **228** and the return controller **210** may be configured to relay data/information pertaining to temperature measurements and/or the flow of cooling fluid to each other and/or to the heat exchange unit **208**. More specifically, the heat exchange unit **208** may include a cooling system controller **246** configured to communicate with the return controller **210** and/or the vent controller **228**. The cooling system controller **246** is generally configured to control the operation of the cooling system **12**, e.g., the compressor **30** and the fan **24**. In this regard, the controller **228** may comprise a microprocessor, a micro-controller, ASIC, and the like.

Interface electronics **252** may be provided to act as an interface between the cooling system controller **246** and the components for operating the compressor **30** and the fan **24**, e.g., the supply of voltage to vary the respective speeds of the compressor and the fan, direct control of the compressor and the fan, etc.

The cooling system controller **246** may also be interfaced with a memory **254** configured to provide storage of a computer software that provides the functionality of the cooling system **12**, e.g., compressor **30** and fan **24**, and may be executed by the cooling system controller **246**. The memory **254** may also be configured to provide a storage for containing data/information pertaining to the manner in which the compressor **30** and the fan **24** may be manipulated in response to variations in the return fluid flow through the returns **38***a*–**38***c* and/or fluid flow through the vents **36***a*–**36***c*. In keeping with the example cited hereinabove, the cooling system controller **246** may operate the compressor **30** and the fan **24** to increase/decrease the volume flow rate of the cooling fluid flow in response to various degrees of detected increases/decreases in the volume flow rate through the returns **38***a*–**38***c* and/or the vents **36***a*–**36***c*. More particularly, a look up table (not shown) may be stored in the memory **254**. By way of example, the look up table may include information pertaining to the level of compressor **30** speed and fan **24** output increase necessary for a detected increase in the volume flow rate. In this respect, the compressor **30** speed and the fan **24** output may be varied substantially incrementally in response to detected changes in the volume flow rate. The memory **254** may be implemented as a combination of volatile and non-volatile memory, such as dynamic random access memory (DRAM), EEPROM, flash memory, and the like.

Although FIG. **2**A illustrates a single return controller **210** configured to operate the returns **38***a*–**38***c*, it should be understood that a plurality of return controllers may be implemented to perform the functions of the return controller **210** without deviating from the scope and spirit of the invention.

In FIG. **2**B, there is illustrated a block diagram **260** of another control scheme for a cooling system **202** according to the invention. The elements illustrated in the block diagram **260** operate in substantially the same manner as those elements illustrated in the block diagram **200**. However, one difference lies in the substantially independent operability of the heat exchange unit **208** from the return unit **204** and/or the vent unit **206**. That is, operation of the cooling system controller **246** may not be directly related to the operation of the return controller **210** and/or the vent controller **228**. Because of the apparent similarities between the block diagrams **200** and **260**, only those elements that differ between the block diagrams will be described hereinbelow.

Pressure sensors **56**–**58** may be configured to measure the pressure within the space **16** and/or space **22** (e.g., plenums) as described hereinabove. The pressure measurements and/or any discernable changes in the pressure measurements obtained by the pressure sensor(s) **56**–**58** may be relayed to the cooling system controller **246**. In addition, at least one plenum temperature sensor **50**–**52** may be configured to measure the temperature of the fluid within the space **16** and/or space **22**. The temperature measurements and/or any discernable changes in the temperature obtained by the

plenum temperature sensor may also be relayed to the cooling system controller **246**.

The cooling system controller **246** may manipulate the capacity of the compressor **30** based upon the measured temperature of the fluid. That is, the temperature of the fluid within the space **16** and/or space **22** may be maintained at a substantially constant level by manipulation of the compressor. Further, the output of the fan **24** may be manipulated based upon the measured pressure of the fluid in the space **16** to vary the amount of cooling fluid supplied to space **16**, to thereby substantially maintain the pressure of the cooling fluid within the space **16** at a substantially uniform level. Similarly, in addition to or as an alternative to manipulating the fan **24** output in response to pressure measurements within the space **16**, these manipulations may be based upon pressure measurements within the space **22**. Thus, the cooling system controller **246** is operable to increase the speed of the compressor **30** and the fan **24** output, e.g., expend a greater amount of energy, substantially as the heat loads in the racks **18***a*–**18***d* requires such an increase. Consequently, the compressor **30** and the fan **24** are not operated at a substantially constant energy level and the amount of energy necessary is substantially lower than that of conventional cooling systems that typically operate at maximum energy levels.

The memory **254** may also be configured to store data/information pertaining to the control of the compressor **30** speed and the output of the fan **24** corresponding to the measured pressure with the space **16** and/or space **22**. For example, the cooling system controller **246** may increase the compressor **30** speed and fan **24** output by a relatively large amount in response to a relatively large decrease in the measured pressure. In this respect, the pressure within the space **16** and/or space **22** may be maintained at a substantially uniform level even when the pressures change by a relatively sharp amount.

FIG. **3**A shows a flow diagram **300** of a first manner in which an embodiment of the invention may be practiced. The following description of the flow diagram **300** is made with reference to the block diagram **200** illustrated in FIG. **2**A, and thus makes reference to the elements cited therein. It is to be understood that the steps illustrated in the flow diagram **300** may be contained as a utility, program, subprogram, in any desired computer accessible medium. In addition, the flow diagram **300** may be embodied by a computer program, which can exist in a variety of forms both active and inactive. For example, they can exist as software program(s) comprised of program instructions in source code, object code, executable code or other formats. Any of the above can be embodied on a computer readable medium, which include storage devices and signals, in compressed or uncompressed form.

Examples of computer readable storage devices include conventional computer system RAM (random access memory), ROM (read only memory), EPROM (erasable, programmable ROM), EEPROM (electrically erasable, programmable ROM), and magnetic or optical disks or tapes. Examples of computer readable signals, whether modulated using a carrier or not, are signals that a computer system hosting or running the computer program can be configured to access, including signals downloaded through the Internet or other networks. Concrete examples of the foregoing include distribution of the programs on a CD ROM or via Internet download. In a sense, the Internet itself, as an abstract entity, is a computer readable medium. The same is true of computer networks in general. It is therefore to be understood that those functions enumerated below may be performed by any electronic device capable of executing the above-described functions.

In the flow diagram **300**, the cooling system **202** is activated and the vents **36***a*–**36***c* and the returns **38***a*–**38***c* are opened at step **302**. The temperature of a component (Tc) generally corresponds to the heat load of the heat dissipating components and therefore the subsystems contained in the racks **18***a*–**18***d*. Therefore, the Tc's may be based upon the temperatures of specific heat dissipating components and subsystems. In addition, the Tc's may be based upon the temperatures in the general vicinity of the racks and/or sections of the racks. Thus, those skilled in the art will understand that certain embodiments of the invention may be employed with the temperature sensors (e.g., **48***a*–**48***c*, **50**, **52**, **236**–**240**, etc.) located at various positions throughout the data center. Furthermore, it is within the scope of the invention that the temperature be sensed via mobile temperature sensors. Moreover, use of the term "rack" herein generally refers additionally to sections of the racks and thus may not necessarily refer to an entire rack. Thus, the use of the term "rack" throughout the disclosure is not meant to limit certain aspects to entire racks, but instead, is relied upon to simplify the description of certain embodiments of the invention.

At step **304**, the temperatures of the components (Tc's) are individually sensed by the temperature sensors. Alternatively, the Tc's may be anticipated in the manner described hereinabove with respect to FIG. **2**A. At step **306**, it is determined whether each of the measured temperatures are individually within a predetermined range of operating temperatures, e.g., between a maximum set point temperature (Tmax,set) and a minimum set point temperature (Tmin, set). The predetermined range of operating temperatures may be set according to a plurality of factors. These factors may include, for example, the operating temperatures set forth by the manufacturers of the subsystems and components located in the racks, through testing to determine the optimal operating temperatures, etc. In addition, the predetermined range of operating temperatures may vary from one subsystem to another on the basis that various subsystems generally may operate effectively at various temperatures.

The measured and/or anticipated temperatures for those racks determined to have heat loads that fall within the predetermined range of operating temperatures, are sensed again at step **304**. For those racks determined to have heat loads that do not fall within the predetermined temperature range, i.e., fall outside of Tmin,set and Tmax,set, it is determined whether the sensed temperature equals or falls below the Tmin,set at step **308**. In general, the range of temperatures Tmin,set and Tmax,set pertains to threshold temperatures to determine whether to increase or decrease the flow of cooling fluid delivered to the racks. The predetermined temperature range may be based upon a plurality of factors, for example, a threshold operating range of temperatures that may be determined through testing to substantially optimize the performance of the subsystems contained in the racks. Moreover, the predetermined temperature range may vary for each rack because various components generally may operate effectively at various temperatures and thus various threshold temperatures may be optimal.

If the Tc's of some of the racks are below or equal to the Tmin,set, the return controller **210** and/or the vent controller **228** may operate to decrease the volume flow rate and/or the velocity of cooling fluid circulating about those racks at step **310**. The determination of whether to decrease either or both

the volume flow rate and the velocity of the cooling fluid may be based upon the detected temperature of the racks. For example, if the subsystems on a bottom half of a rack are operating at 50 percent of maximum capacity, and the subsystems on an upper half of the rack are operating at or near zero capacity, the velocity of the cooling fluid may be reduced whereas the volume flow rate may remain substantially constant. This may occur, for example, because the cooling fluid need not travel a relatively long distance but may still need to supply the bottom half with a sufficient amount of cooling fluid.

If the Tc's of some of the racks exceed the Tmin,set (i.e., also exceed the Tmax,set), the return controller **210** and/or the vent controller **228** may operate to increase the volume flow rate and/or the velocity of cooling fluid circulating about those racks at step **312**. The determination of whether to increase either or both the volume flow rate and the velocity of the cooling fluid may be based upon the detected temperature of the racks. For example, if the subsystems on the top half of a rack are operating at 100 percent capacity, and the subsystems on a bottom half of the rack are operating at or near zero capacity, the velocity and the volume flow rate of the cooling fluid may both be increased. This may occur, for example, because the cooling fluid must travel a relatively long distance and supply the top half with a sufficient amount of cooling fluid.

According to an embodiment of the invention, the decrease in volume flow rate and/or velocity of the cooling fluid flow at step **310** and the increase in volume and/or velocity of the cooling fluid at step **312** may be accomplished by incrementally varying the cooling fluid flow through the returns **38***a*–**38***c* and/or the vents **36***a*–**36***c*. An example will be made for the instance where a return allows a certain amount of cooling fluid to flow therethrough, and the return is manipulated to increase the volume flow rate of the cooling fluid, and where the increase in fluid flow is insufficient to cause the Tc for that rack to fall within the predetermined range. In this instance, during a subsequent run through steps **204**–**210**, the return may be controlled to further increase the volume flow rate of the cooling fluid therethrough by an incremental amount. By repeating this process a number of times, the temperature of the rack may be substantially brought within the predetermined range. Similarly, manipulation of a vent in conjunction with the manipulation of the return may allow for greater control of the volume flow rate of fluid in and/or around a rack. In this manner, greater temperature control may be facilitated and greater energy savings may be realized.

At step **314**, the cooling system controller **246** may determine whether to decrease the cooling fluid intake, e.g., decrease the speed of the compressor **30** and/or the fan **24**. The determination of whether to decrease the cooling fluid intake may be made in response to the manipulations made to the returns **38***a*–**38***c* by the return controller **210**. For instance, if the total amount of decreases in the volume flow rates of the cooling fluid exceeds the total amount of increases in the volume flow rates flow of the cooling fluid, the cooling system controller **246** may operate to decrease the cooling fluid intake at step **316**. Alternatively, if the total amount of increases in the volume flow rates of the cooling fluid exceeds the total amount of decreases, the cooling system controller **246** may operate to increase the cooling system intake at step **318**.

Following steps **316** or **318**, or if the increases in the volume flow rates of the cooling fluid through the returns equals the decreases, for example, the Tc's are sensed again at step **304**. In addition, the steps following step **304** may be repeated for an indefinite period of time so long as the cooling system **202** is in operation.

It should be appreciated that the Tc's of some of the racks may fall below the Tmin,set, whereas the Tc's of other racks may exceed the Tmax,set. Thus, it should be appreciated that steps **310** and **312** may be respectively and substantially simultaneously performed on the various racks.

FIG. **3**B shows a flow diagram **350** of a second manner in which another embodiment of the invention may be practiced. The following description of the flow diagram **350** is made with reference to the block diagram **260** illustrated in FIG. **2**B, and thus makes reference to the elements cited therein. It is to be understood that the steps illustrated in the flow diagram **350** may be contained as a utility, program, subprogram, in any desired computer accessible medium. In addition, the flow diagram **350** may be embodied by a computer program, which can exist in a variety of forms both active and inactive. For example, they can exist as software program(s) comprised of program instructions in source code, object code, executable code or other formats. Any of the above can be embodied on a computer readable medium, which include storage devices and signals, in compressed or uncompressed form.

Examples of computer readable storage devices include conventional computer system RAM (random access memory), ROM (read only memory), EPROM (erasable, programmable ROM), EEPROM (electrically erasable, programmable ROM), and magnetic or optical disks or tapes. Examples of computer readable signals, whether modulated using a carrier or not, are signals that a computer system hosting or running the computer program can be configured to access, including signals downloaded through the Internet or other networks. Concrete examples of the foregoing include distribution of the programs on a CD ROM or via Internet download. In a sense, the Internet itself, as an abstract entity, is a computer readable medium. The same is true of computer networks in general. It is therefore to be understood that those functions enumerated below may be performed by any electronic device capable of executing the above-described functions.

In the flow diagram **350**, steps **352**-**362** respectively correspond to steps **302**–**312** recited hereinabove with respect to the flow diagram **300** illustrated in FIG. **2**A. Therefore, a detailed description of steps **352**–**362** will not be made herein. Instead, one of ordinary skill in the art will readily recognize that the description made hereinabove with respect to steps **302**–**312** has general applicability to steps **352**–**362** and may thus be used interchangeably.

Therefore, beginning at step **364**, the pressure of the cooling fluid returning to the cooling system **12** may be measured by a pressure sensor (e.g., the pressure sensor **56**, **58**, etc.). The measured pressure may be relayed to the cooling system controller **246**. The cooling system controller **246** may determine whether the measured pressure is within a predetermined pressure range, e.g., a predetermined minimum set point pressure (Pmin,set) and a predetermined maximum set point pressure (Pmax,set), at step **366**. The predetermined pressure range may be set according to a maximum desired volume flow rate and/or velocity of the cooling fluid to be drawn in through the returns **38***a*–**38***c*. In addition, the predetermined pressure range may be the substantial optimum operating pressure desired for controlling the flow of cooling fluid through the returns. If the measured pressure is within the predetermined pressure range, the cooling system controller **246** returns to step **364**. Furthermore, it is within the scope of the invention that the

cooling system controller **246** may alternate between temperature dependent control (e.g., steps **354** to **362**) and pressure dependent control (e.g., steps **364** to **372**). In this regard, following step **366**, the cooling system controller **246** may return to step **354** and following the step **356**, the cooling system controller **246** may return to step **364**.

If the measured pressure is not within the predetermined pressure range, it is determined whether an absolute value of the measured pressure (P) is below or equal to a minimum pressure set point (Pmin,set) at step **368**. The absolute value is utilized because the pressure within the return is likely to be a negative value as compared to the room pressure. In general, the predetermined pressure range pertains to the threshold pressures to determine whether to increase or decrease the movement of cooling fluid, e.g., in the space **16** and/or space **22**. The predetermined pressure range may be based upon a plurality of factors, for example, a threshold operating pressure or range of pressures that may be determined through testing to substantially optimize the performance of the cooling fluid intake through the returns **38***a*–**38***c*.

If the absolute value of the P is determined to be below or equal to the Pmin,set, the cooling system controller **246** may operate to increase the cooling fluid intake, e.g., by increasing the speed of the fan **24** at step **370**. Otherwise, if the absolute value of the P is determined to exceed the Pmin,set, and thereby exceed the Pmax,set, the cooling system controller **246** may operate to decrease the intake of the cooling fluid, e.g., by decreasing the compressor capacity and/or the fan speed, at step **372**.

Following steps **370** or **372**, the cooling system controller **246** returns to step **364**. In addition, the steps following step **364** may be repeated for an indefinite period of time so long as the cooling system **202** is in operation.

In accordance with an embodiment of the invention, the cooling requirements within a data center may be analyzed to substantially optimize the layout of the racks within the data center. In one respect, the substantial optimization of the rack layout in the data center may enable the cooling system of the data center to operate at generally lower energy and greater efficiency levels by virtue of the reduced workload placed on the components of the cooling systems, e.g., compressors, fans, etc. The cooling requirements within the data center may be analyzed by operation of any reasonably suitable commercially available computational fluid dynamics (CFD) tool, e.g., FLOVENT, a 3-D modeling software capable of predicting temperature variations based upon fluid flows. By virtue of the numerical modeling, various air conditioning units as well as the vents described hereinabove may be positioned throughout the data center to substantially control the manner in which the racks receive the cooling fluid. In addition, the air conditioning units may also be positioned to substantially maximize and optimize their performances, e.g., to prevent one or more of the air conditioning units from being overworked.

In determining the cooling fluid distribution requirement within the data center, each of the racks may be assigned a heat load which may correspond to a maximum heat load predicted for that rack, e.g., through anticipated power draw. For example, a rack containing 40 subsystems, e.g., computers, may have a maximum heat load of 10 KW and a rack containing 20 subsystems may have a maximum heat load of 5 KW. By implementing the CFD in this manner, for example in a data center containing 100 racks and four air conditioning units, racks having a potential for relatively larger heat loads may be relatively separately located throughout the data center. In one respect, therefore, the air conditioning units within the data center may be operated at substantially less than maximum power levels and the racks may receive sufficient amounts of cooling fluid. More specifically, the power required to operate the air conditioning units may be regulated to efficiently cool the fluid supplied to the racks by providing substantially only that amount of cooling fluid necessary to maintain the racks within normal operating temperatures.

According to another embodiment of the invention, a CFD tool may be implemented substantially continuously with the embodiments described hereinabove with respect to FIGS. **1**–**3**. More specifically, the CFD tool may be utilized to substantially continuously vary the operation of the cooling system to operate according to the heat loads generated in the racks. In this regard, the anticipated or actual heat loads (e.g., based upon the power draw of the components) on the racks may be inputted into the CFD tool, along with one or more of the following properties: velocity of the cooling fluid flowing through various sections of the data center and the distribution of temperature and pressure of the cooling fluid in the data center, to determine an optimal manner in which the air conditioning units may be operated as well as the flow of the cooling fluid through the vents to adequately cool the racks based upon an analysis of the data center layout and the heat loads. The CFD tool may be implemented to produce a numerical model of the data center to thus determine an optimized cooling distribution within the data center. A correlation of one or more of the following properties: velocity of the cooling fluid flowing through various sections of the data center, distribution of temperature and pressure of the cooling fluid in the data center, and the power draw into the racks, may be created based on the numerical modeling. The correlation may be used to infer thermal conditions throughout the data center when only a minimum number of sensors are available during operation of the cooling system. In addition, the correlation may substantially reduce the amount of time required for the CFD tool to perform the computing operations.

Thus, for example, with respect to FIG. **3**A, at step **312**, a numerical model may be created to analyze an optimal manner in which the volume flow and/or the velocity of the cooling fluid may be increased while considering the effects of fluid flow from other racks. In this respect, based upon the analysis, the return configured to remove cooling fluid from the vicinity of that rack and/or another return may be caused to vary the volume flow and/or velocity of the cooling fluid. In addition, at step **314**, the numerical model may be created to determine whether the cooling system intake should be decreased based upon the heat loads and the fluid flow throughout the data center. For example, if it is determined that a rack with an increasing heat load may receive a sufficient amount of cooling fluid by removing cooling fluid from a return generally away therefrom, the cooling system intake may not be increased. Thus, by implementation of the CFD tool to generally analyze the fluid flow characteristics and the temperatures of the racks, the amount of energy required to sufficiently cool the racks in the data center may be substantially optimized.

According to yet another embodiment of the invention, any reasonable control system may be employed to control the cooling system **202**. Specific examples of control systems employable to control the cooling system **202** include, but are not limited to: agent based control and market based control. For example, in an agent based control system, each component of the cooling system **202** may be controlled by

a software "agent" configured to interact and negotiate with the other agents to accomplish a collective goal of cooling the racks in a most efficient manner. In an example of a market based control system, each resource (e.g., cooling needs, fluid velocity, energy usage, etc.) may be assigned a unit value based on its relative supply and demand. The unit costs of these resources may be negotiated via a known market based software application and units of these resources may be traded within the system.

By virtue of certain aspects of the invention, one of ordinary skill in the art will readily recognize that the amount of energy, and thus the costs associated with cooling the racks located within a data center may be substantially reduced. In one respect, by operating the cooling system to circulate cooling fluid substantially only as needed by the racks, the cooling system may be operated at a relatively more efficient manner as compared to conventional cooling systems.

What has been described and illustrated herein is an embodiment of the invention along with some of its variations. The terms, descriptions and figures used herein are set forth by way of illustration only and are not meant as limitations. Those skilled in the art will recognize that many variations are possible within the spirit and scope of the invention, which is intended to be defined by the following claims—and their equivalents—in which all terms are meant in their broadest reasonable sense unless otherwise indicated.

What is claimed is:

1. A cooling system for cooling racks in a data center, said system comprising:

a cooling device for circulating cooling fluid in said data center, said cooling device including a fan;

a plenum having a plurality of returns and an outlet, wherein said outlet of said plenum is in fluid communication with said fan, wherein said plurality of returns are configured for removing said cooling fluid from said data center and are operable to vary a characteristic of said removal of cooling fluid through said plurality of returns;

a cooling device controller operable to control the intake of said cooling fluid by said cooling device; and

a pressure sensor situated within said plenum to measure the pressure of said cooling fluid located within said plenum,

wherein said cooling device controller is operable to vary the intake of said cooling fluid by said cooling device in response to the measured pressure of said cooling fluid in said plenum.

2. The system according to claim **1**, wherein said characteristic of said cooling fluid comprises at least one of volume flow rate, velocity and direction of cooling fluid removal.

3. The system according to claim **1**, further comprising:

at least one return controller operable to control at least one of said returns, wherein said at least one return controller is configured to substantially independently control said returns to thereby substantially independently vary said characteristic of said cooling fluid removal.

4. The system according to claim **3**, further comprising:

a plurality of sensors configured to sense an environmental condition within said data center, said environmental condition including at least one of temperature, humidity, pressure, and cooling fluid flow rate, wherein said at least one return controller is configured to substantially independently control said returns in response to said measured pressure environmental condition.

5. The system according to claim **4**, wherein said plurality of sensors are configured to sense an environmental condition in locations outside of the plurality of racks and wherein the at least one controller is configured to substantially independently control said plurality of returns in response to said measured environmental condition out side of the racks.

6. The system according to claim **1**, wherein the plurality of returns includes fans configured to draw cooling fluid from the data center, wherein the fans are movable to vary a direction of cooling fluid removal.

7. The system according to claim **1**, wherein the plurality of returns are independent of the racks.

8. The system according to claim **1**, wherein the cooling device controller is operable to vary the speed of said compressor to vary a temperature of the cooling fluid delivered to the racks.

9. The system according to claim **1**, wherein the cooling device controller is operable to vary the speed of the fan to vary a volume flow rate of cooling fluid delivered to the racks.

10. A method of cooling a plurality of racks in a data center, said method comprising:

activating a cooling system and opening a plurality of returns, said plurality of returns being configured to remove cooling fluid from various locations of said data center, said plurality of returns also being in fluid communication with a plenum, wherein cooling fluid is configured to flow through the plurality of returns through the plenum and into the cooling system;

sensing a pressure of said cooling fluid in the plenum;

determining whether said sensed pressure is within a predetermined pressure range; and

varying an intake of said cooling system through the plurality of returns in response to said sensed pressure falling outside of said predetermined pressure range.

11. The method according to claim **10**, wherein said step of varying said cooling system intake includes determining whether said measured pressure falls below or equals a predetermined minimum set point pressure.

12. The method according to claim **11**, further comprising:

decreasing the intake of said cooling system in response to said measured pressure falling below or equaling said predetermined minimum set point pressure.

13. The method according to claim **11**, further comprising:

increasing the intake of said cooling system in response to said measured pressure exceeding said predetermined minimum set point pressure.

14. The method according to claim **10**, wherein the step of varying said removal of said cooling fluid from said racks comprises varying the direction of removal of said cooling fluid.

15. The method according to claim **10**, wherein the step of varying said removal of said cooling fluid from said racks comprises substantially independently controlling said plurality of returns to thereby substantially independently vary said removal of said cooling fluid from said racks through said plurality of returns.

16. The method according to claim **10**, further comprising:

varying a speed of the compressor to vary a temperature of the cooling fluid delivered to the racks.

17. The method according to claim **10**, further comprising:

varying the speed of the fan to vary a volume flow rate of cooling fluid delivered to the racks.

18. An apparatus for cooling a plurality of racks in a data center, said apparatus comprising:

means for activating a cooling system and opening a plurality of returns, each of said returns being configured to remove cooling fluid from various locations of said data center, said plurality of returns also being in fluid communication with a plenum, wherein cooling fluid is configured to flow through the plurality of returns through the plenum and into the cooling system;

means for sensing a pressure of said cooling fluid in the plenum;

means for determining whether said sensed pressure is within a predetermined pressure range; and

means for varying an intake of said cooling system through the plurality of returns in response to said sensed pressure falling outside of said predetermined pressure range.

19. The apparatus according to claim **18**, wherein said means for varying said cooling system intake includes means for determining whether said measured pressure falls below or equals a predetermined minimum set point pressure.

20. The apparatus according to claim **19**, further comprising:

means for decreasing the intake of said cooling system in response to said measured pressure falling below or equaling said predetermined minimum set point pressure.

21. The apparatus according to claim **19**, further comprising:

means for increasing the intake of said cooling system in response to said measured pressure exceeding said predetermined minimum set point pressure.

22. The apparatus according to claim **18**, wherein the various locations of said data center comprises a plurality of racks.

23. The apparatus according to claim **18**, wherein the means for varying said removal of said cooling fluid from said racks comprises means for varying the direction of said removal of said cooling fluid.

24. The apparatus according to claim **18**, wherein the means for varying said removal of said cooling fluid from said racks comprises means for substantially independently controlling said plurality of returns to thereby substantially independently vary said removal of said cooling fluid from said racks through said plurality of returns.

25. The apparatus according to claim **18**, further comprising:

varying a speed of the compressor to vary a temperature of the cooling fluid delivered to the racks.

26. The apparatus according to claim **18**, further comprising:

means for varying the speed of the fan to vary a volume flow rate of cooling fluid delivered to the racks.

27. A computer readable medium on which is embedded computer software, said software comprising executable code for performing a method of cooling a plurality of racks in a data center, said method comprising:

activating a cooling system and opening a plurality of returns, each of said returns being configured to remove cooling fluid from various locations of said data center, said plurality of returns also being in fluid communication with a plenum, wherein cooling fluid is configured to flow through the plurality of returns through the plenum and into the cooling system;

sensing a pressure of said cooling fluid in the plenum;

determining whether said sensed pressure is within a predetermined pressure range; and

varying an intake of said cooling system through the plurality of returns in response to said sensed pressure falling outside of said predetermined pressure range.

28. The computer readable medium according to claim **27**, wherein said step of varying said cooling system intake includes determining whether said measured pressure falls below or equals a predetermined minimum set point pressure.

29. The computer readable medium according to claim **28**, further comprising:

decreasing the intake of said cooling system in response to said measured pressure falling below or equaling said predetermined minimum set point pressure.

30. The computer readable medium according to claim **28**, further comprising:

increasing the intake of said cooling system in response to said measured pressure exceeding said predetermined minimum set point pressure.

31. The computer readable medium according to claim **27**, wherein the various locations of said data center comprises a plurality of racks.

32. The computer readable medium according to claim **27**, further comprising:

varying the direction of removal of said cooling fluid.

33. The computer readable medium according to claim **27**, further comprising:

substantially independently controlling said plurality of returns to thereby substantially independently vary said removal of said cooling fluid from said racks through said plurality of returns.

34. The computer readable medium according to claim **27**, further comprising:

varying a speed of the compressor to vary a temperature of the cooling fluid delivered to the racks.

35. The computer readable medium according to claim **34**, further comprising:

varying the speed of the fan to vary a volume flow rate of cooling fluid delivered to the racks.

* * * * *

Exhibit 3

US006868682B2

(12) **United States Patent**
Sharma et al.

(10) **Patent No.: US 6,868,682 B2**
(45) **Date of Patent: Mar. 22, 2005**

(54) **AGENT BASED CONTROL METHOD AND SYSTEM FOR ENERGY MANAGEMENT**

(75) Inventors: **Ratnesh K. Sharma**, Union City, CA (US); **Cullen E. Bash**, San Francisco, CA (US); **Chandrakant D. Patel**, Fremont, CA (US)

(73) Assignee: **Hewlett-Packard Development Company, L.P.**, Houston, TX (US)

(*) Notice: Subject to any disclaimer, the term of this patent is extended or adjusted under 35 U.S.C. 154(b) by 0 days.

(21) Appl. No.: **10/345,723**

(22) Filed: **Jan. 16, 2003**

(65) **Prior Publication Data**

US 2004/0141542 A1 Jul. 22, 2004

(51) **Int. Cl.**[7] **F25D 17/00**; F25D 23/12

(52) **U.S. Cl.** **62/180**; 62/259.2; 62/229; 361/696

(58) **Field of Search** 62/180, 178, 259.2, 62/228.4, 229; 361/696

(56) **References Cited**

U.S. PATENT DOCUMENTS

5,345,779 A * 9/1994 Feeney 62/259.2
5,467,609 A * 11/1995 Feeney 62/259.2
6,283,380 B1 * 9/2001 Nakanishi et al. 236/49.3
6,374,627 B1 * 4/2002 Schumacher et al. 62/259.2
6,412,292 B2 * 7/2002 Spinazzola et al. 62/89
6,494,050 B2 * 12/2002 Spinazzola et al. 62/89
6,557,357 B2 * 5/2003 Spinazzola et al. 62/89
6,557,624 B1 * 5/2003 Stahl et al. 165/53
6,574,104 B2 * 6/2003 Patel et al. 361/695
6,574,970 B2 * 6/2003 Spinazzola et al. 62/89
6,628,520 B2 * 9/2003 Patel et al. 361/696
6,672,955 B2 * 1/2004 Charron 454/184
6,694,759 B1 * 2/2004 Bash et al. 62/180
2004/0020224 A1 * 2/2004 Bash et al. 62/228.4
2004/0020225 A1 * 2/2004 Patel et al. 62/229
2004/0020226 A1 * 2/2004 Bash et al. 62/229

* cited by examiner

Primary Examiner—Marc Norman

(57) **ABSTRACT**

Controlling the temperature in a data center includes receiving sensory data corresponding to a temperature from a subsystem in a data center, processing the sensory data by a first agent in a hierarchy of agents to determine if the subsystems in the data center is operating within a predetermined temperature range, adjusting a delivery rate for a cooling fluid using the first agent to keep the temperature range of the subsystem within the predetermined temperature range, and requesting a second agent from the hierarchy of agents to process the sensory data when the first agent cannot keep the temperature range within the predetermined temperature range unless the second agent redistributes the cooling fluid being delivered. A third agent is used to vary the amount of cooling fluid output when at least the first and second agent cannot keep the subsystem operating within the predetermined temperature range.

30 Claims, 9 Drawing Sheets

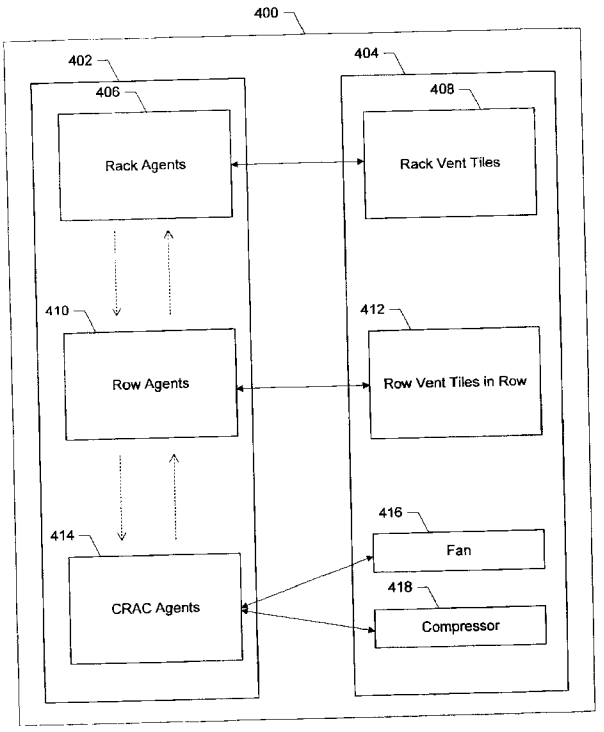

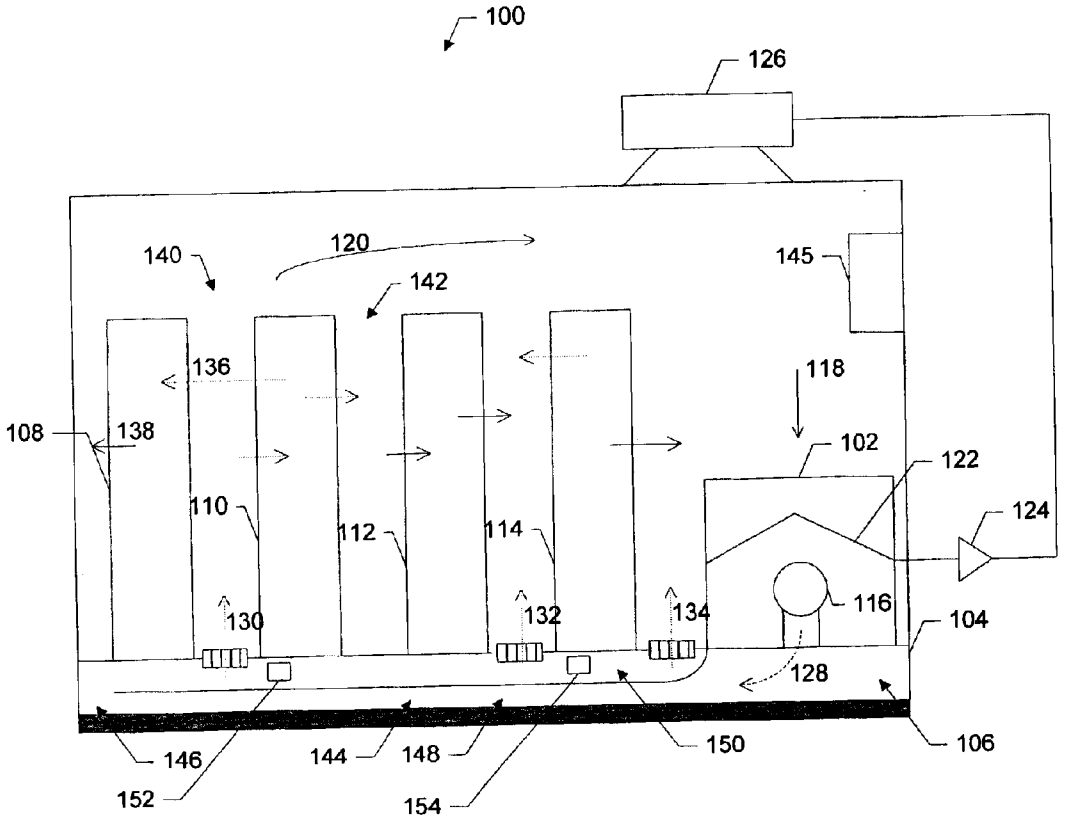
100
126
140
120
142
145
136
118
108
138
102
122
110
112
114
124
130
132
134
116
104
128
146
144
148
150
106
152
154

FIG. 1

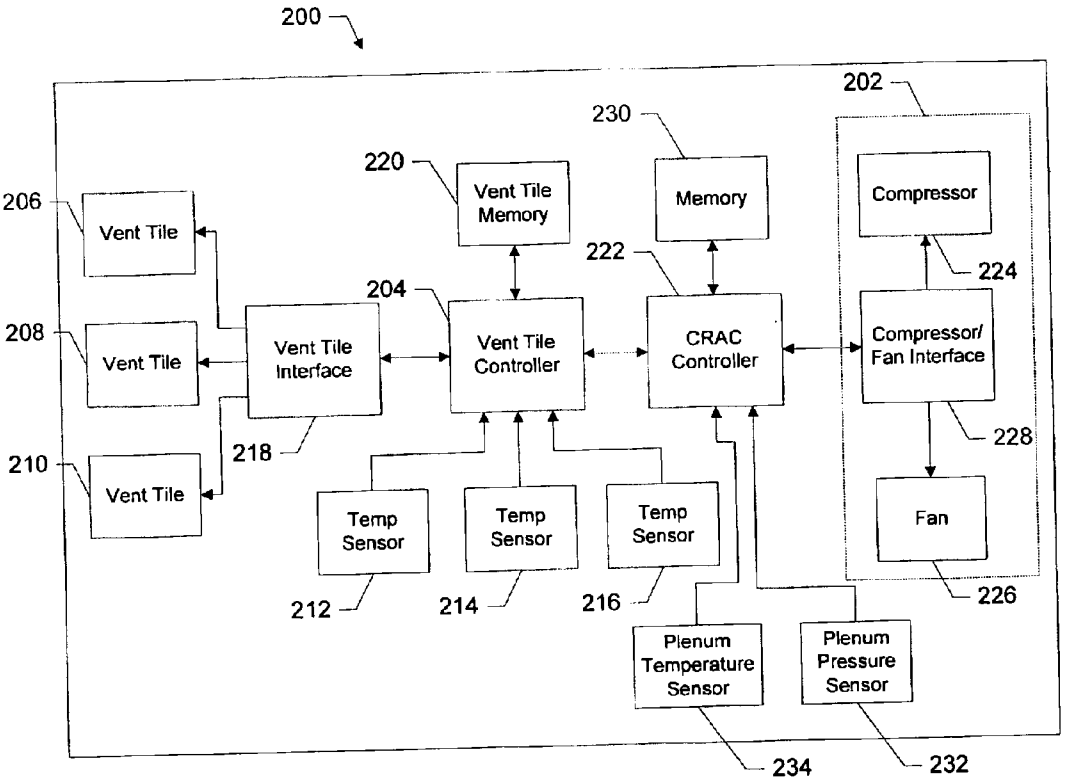
200
202
230
220
Vent Tile Memory
Memory
Compressor
206
Vent Tile
222
224
204
208
Vent Tile
Vent Tile Interface
Vent Tile Controller
CRAC Controller
Compressor/ Fan Interface
228
210
218
Vent Tile
Temp Sensor
Temp Sensor
Temp Sensor
Fan
212
214
216
226
Plenum Temperature Sensor
Plenum Pressure Sensor
234
232

FIG. 2

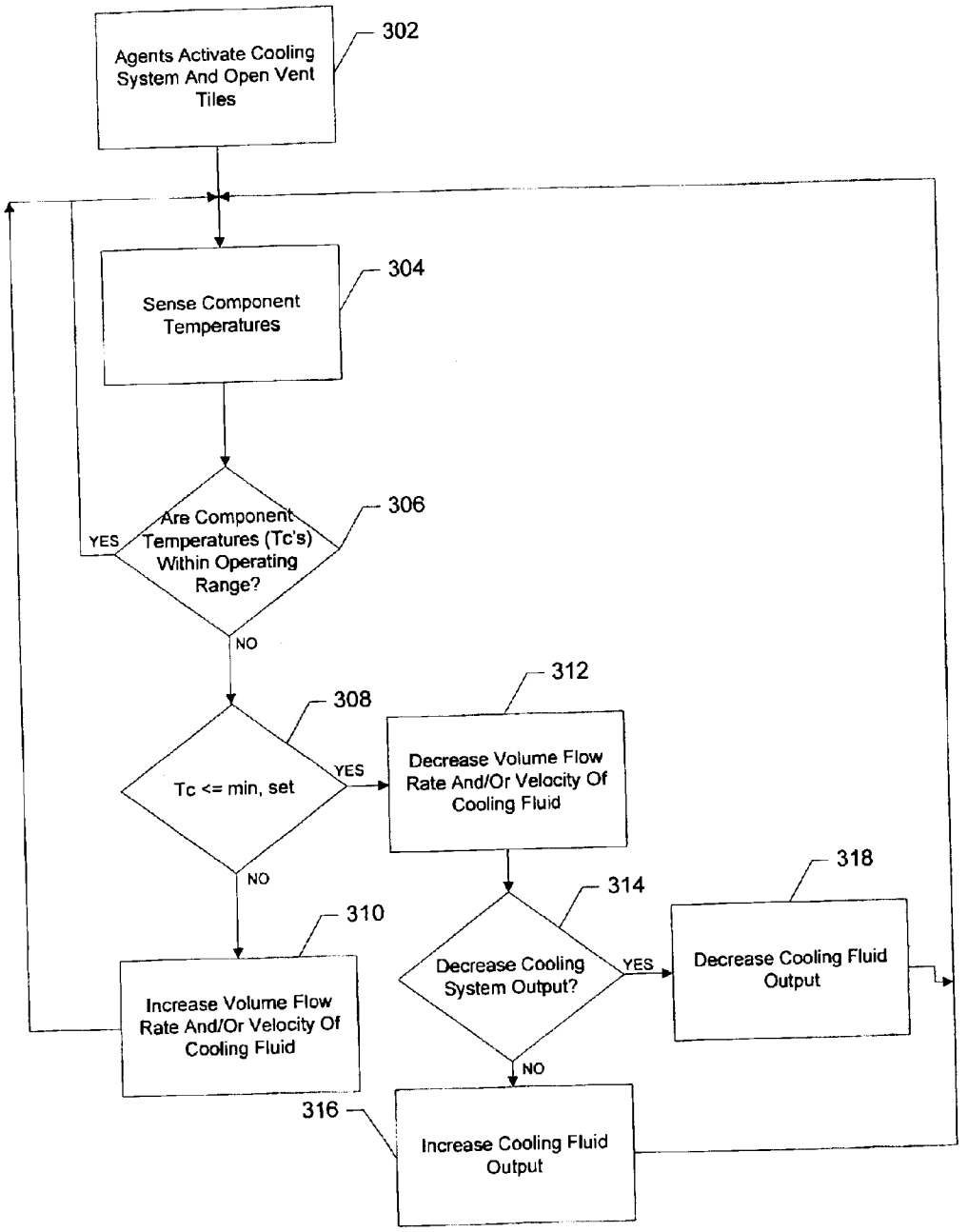
Agents Activate Cooling System And Open Vent Tiles
302
Sense Component Temperatures
304
Are Component Temperatures (Tc's) Within Operating Range?
306
YES
NO
Tc <= min, set
308
YES
NO
Decrease Volume Flow Rate And/Or Velocity Of Cooling Fluid
312
Increase Volume Flow Rate And/Or Velocity Of Cooling Fluid
310
Decrease Cooling System Output?
314
YES
NO
Decrease Cooling Fluid Output
318
Increase Cooling Fluid Output
316

FIG. 3A

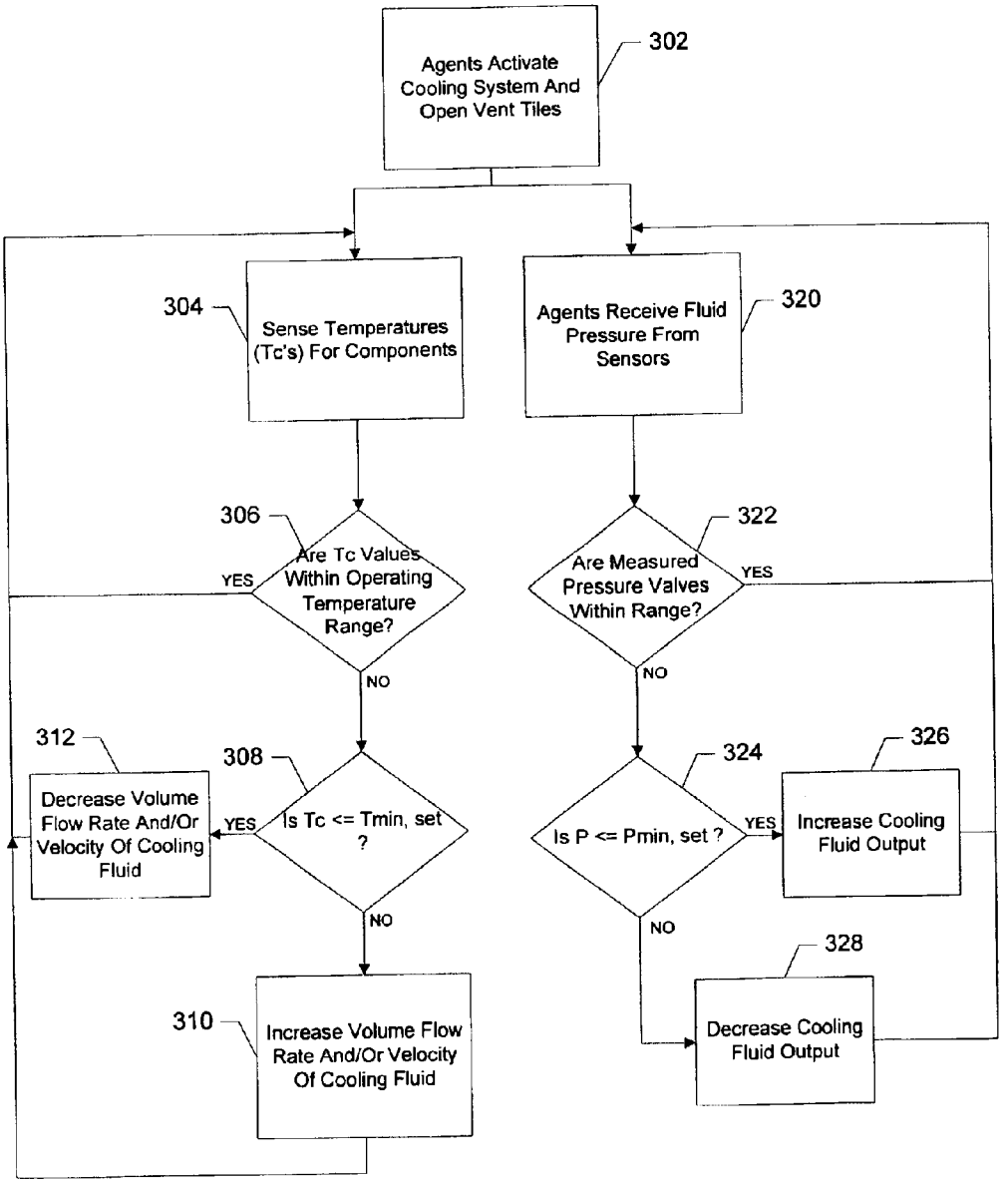
Agents Activate Cooling System And Open Vent Tiles
302
304
Sense Temperatures (Tc's) For Components
Agents Receive Fluid Pressure From Sensors
320
306
Are Tc Values Within Operating Temperature Range?
YES
NO
322
Are Measured Pressure Valves Within Range?
YES
NO
312
Decrease Volume Flow Rate And/Or Velocity Of Cooling Fluid
308
Is Tc <= Tmin, set ?
YES
NO
324
Is P <= Pmin, set ?
YES
NO
326
Increase Cooling Fluid Output
328
Decrease Cooling Fluid Output
310
Increase Volume Flow Rate And/Or Velocity Of Cooling Fluid

FIG. 3B

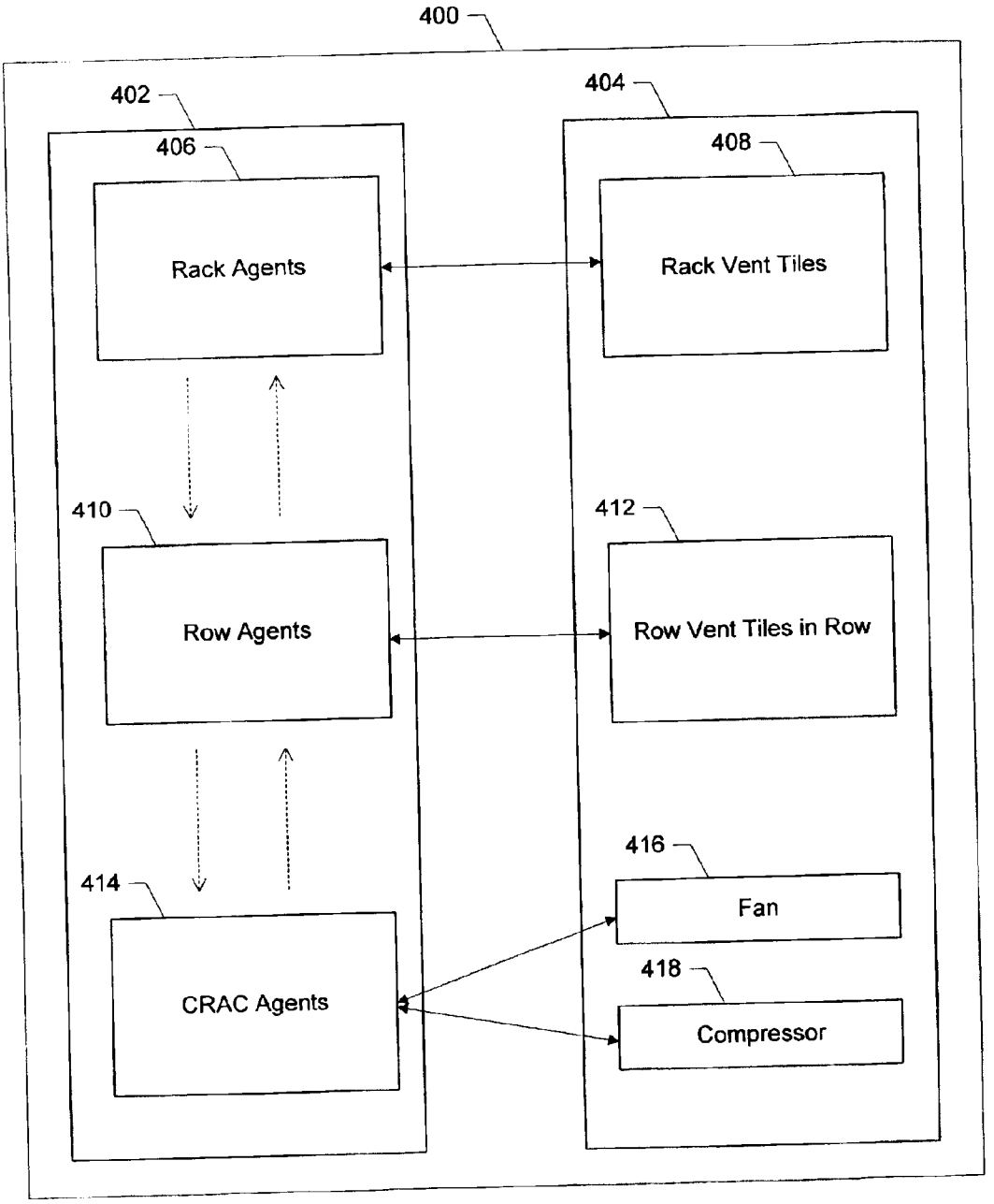
400
402
404
406
408
Rack Agents
Rack Vent Tiles
410
412
Row Agents
Row Vent Tiles in Row
414
416
Fan
418
CRAC Agents
Compressor

FIG. 4

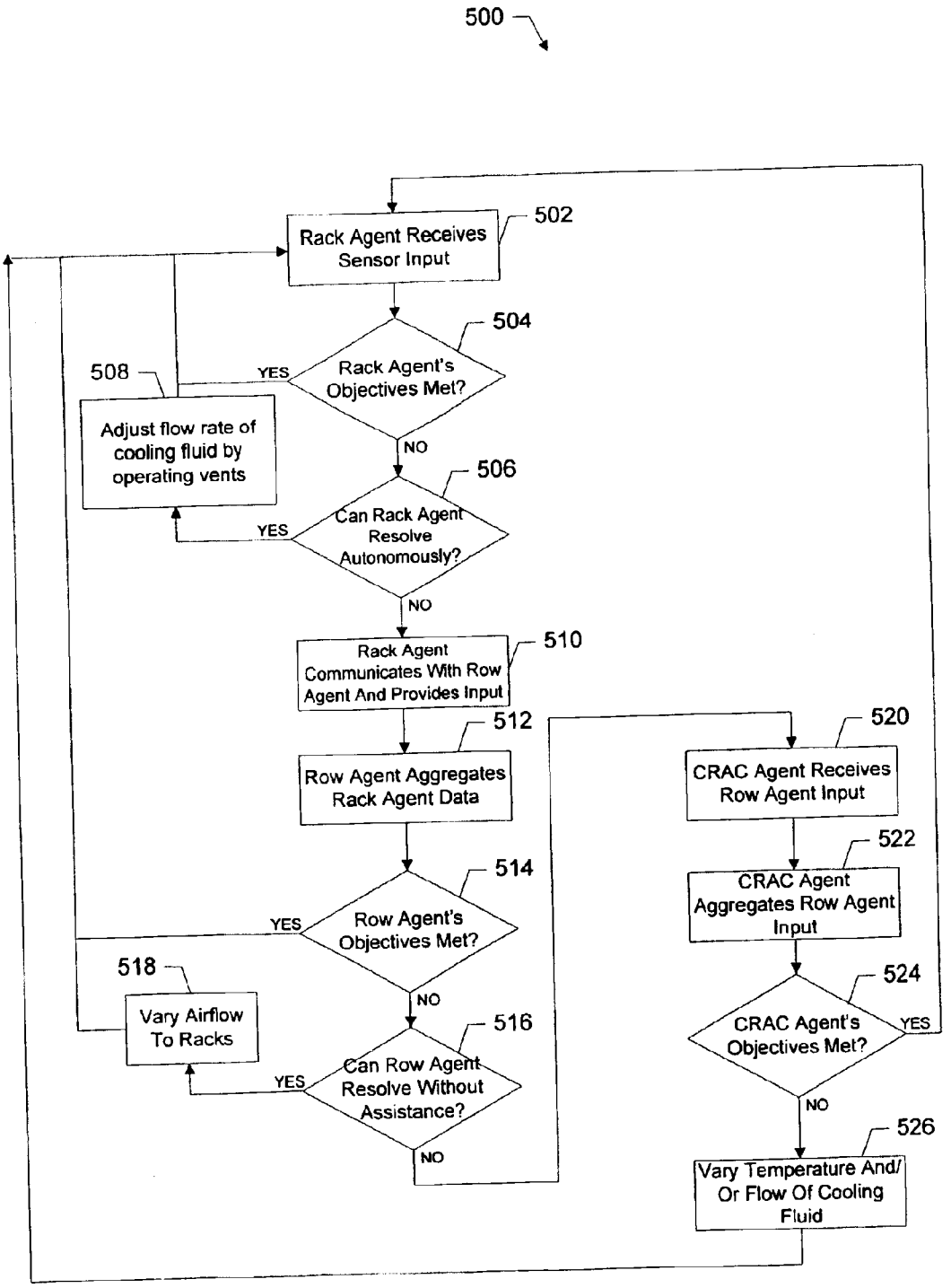
500
502
Rack Agent Receives Sensor Input
504
Rack Agent's Objectives Met?
YES
NO
508
Adjust flow rate of cooling fluid by operating vents
506
Can Rack Agent Resolve Autonomously?
YES
NO
510
Rack Agent Communicates With Row Agent And Provides Input
512
Row Agent Aggregates Rack Agent Data
514
Row Agent's Objectives Met?
YES
NO
518
Vary Airflow To Racks
516
Can Row Agent Resolve Without Assistance?
YES
NO
520
CRAC Agent Receives Row Agent Input
522
CRAC Agent Aggregates Row Agent Input
524
CRAC Agent's Objectives Met?
YES
NO
526
Vary Temperature And/ Or Flow Of Cooling Fluid

FIG. 5

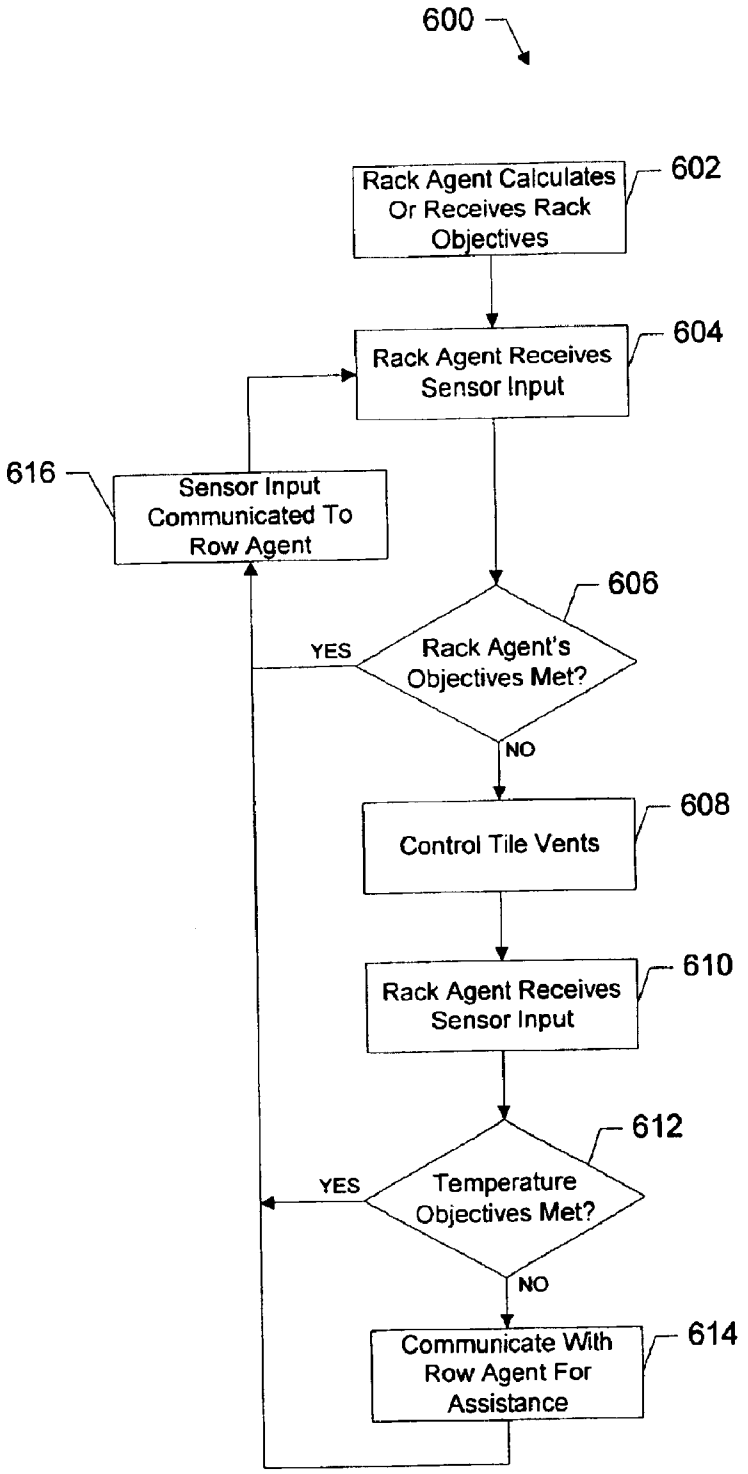
600
Rack Agent Calculates Or Receives Rack Objectives
602
Rack Agent Receives Sensor Input
604
616
Sensor Input Communicated To Row Agent
606
YES
Rack Agent's Objectives Met?
NO
Control Tile Vents
608
Rack Agent Receives Sensor Input
610
612
YES
Temperature Objectives Met?
NO
Communicate With Row Agent For Assistance
614

FIG. 6

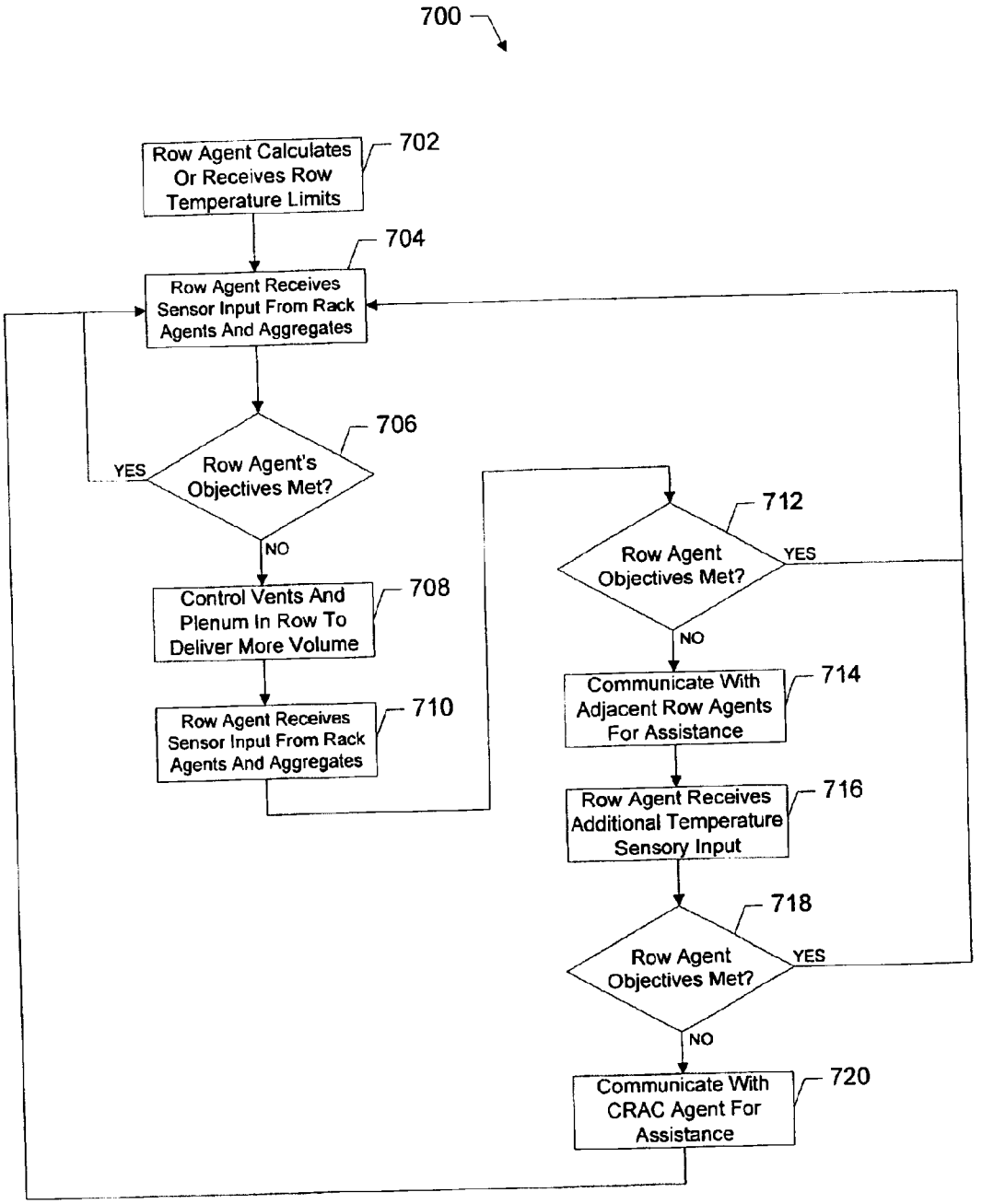
700
Row Agent Calculates Or Receives Row Temperature Limits
702
Row Agent Receives Sensor Input From Rack Agents And Aggregates
704
Row Agent's Objectives Met?
706
YES
NO
Control Vents And Plenum In Row To Deliver More Volume
708
Row Agent Receives Sensor Input From Rack Agents And Aggregates
710
Row Agent Objectives Met?
712
YES
NO
Communicate With Adjacent Row Agents For Assistance
714
Row Agent Receives Additional Temperature Sensory Input
716
Row Agent Objectives Met?
718
YES
NO
Communicate With CRAC Agent For Assistance
720

FIG. 7

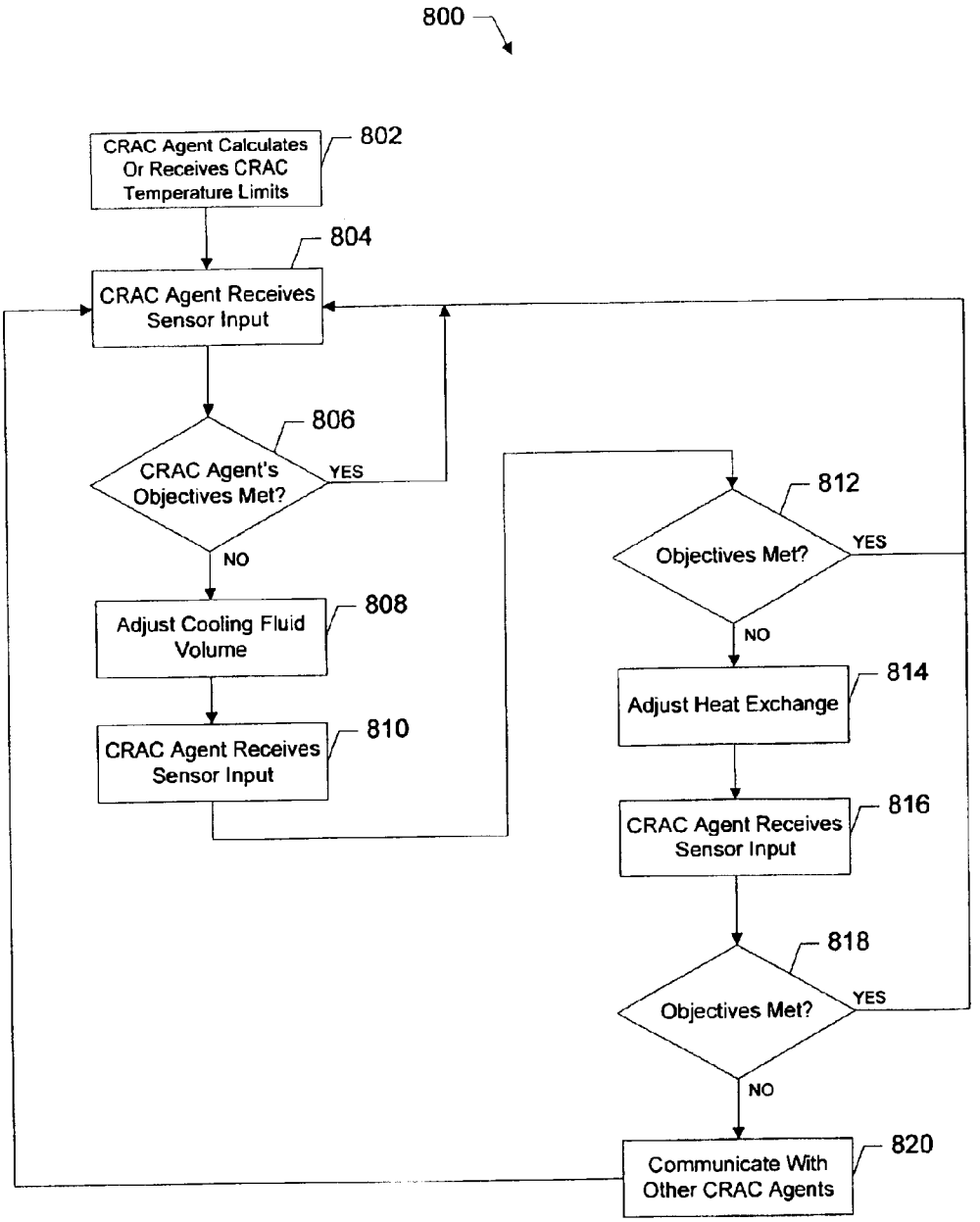
800
CRAC Agent Calculates Or Receives CRAC Temperature Limits
802
CRAC Agent Receives Sensor Input
804
CRAC Agent's Objectives Met?
806
YES
NO
Adjust Cooling Fluid Volume
808
CRAC Agent Receives Sensor Input
810
Objectives Met?
812
YES
NO
Adjust Heat Exchange
814
CRAC Agent Receives Sensor Input
816
Objectives Met?
818
YES
NO
Communicate With Other CRAC Agents
820

FIG. 8

AGENT BASED CONTROL METHOD AND SYSTEM FOR ENERGY MANAGEMENT

CROSS-REFERENCE TO RELATED APPLICATIONS

This application relates to the subject matter disclosed in the co-pending U.S. application Ser. No. 09/970,707, by Patel et al., filed, titled "SMART COOLING OF DATA CENTERS", and assigned to the assignee of the present invention.

BACKGROUND OF THE INVENTION

Aspects of the present invention relate to cooling systems for data centers.

A data center is generally defined as a room, or in some cases, an entire building or buildings, that houses numerous printed circuit (PC) board electronic systems arranged in a number of racks. Multiple racks are arranged into a row. The standard rack may be defined according to dimensions set by the Electronics Industry Association (EIA) for an enclosure: 78 in. (2 meters) wide, 24 in. (0.61 meter) wide and 30 in. (0.76 meter) deep.

Standard racks can be configured to house different combination of components including servers, networking equipment, and/or storage devices. In some cases, the components are embedded in a number of PC boards, ranging from about forty (40) boards, with future configuration of racks being designed to accommodate up to eighty (80) boards. The PC boards may include a number of sub-components, e.g., processors, micro-controllers, high-speed video cards, memories, and semi-conductor devices that dissipate relatively significant amounts of heat during the operation. For example, a typical PC board with multiple microprocessors may dissipate as much as 250 W of power. Consequently, a rack containing 40 PC boards of this type may dissipate approximately 10 KW of power.

Generally, the power used to remove heat generated by the components is equal to about 10 percent of the power used for their operation. However, the power required to remove the heat dissipated by the same components configured into a multiple racks in a data center is generally greater. In many cases, the cooling load required in the data center corresponds to the power drawn by the servers and can be equal to about 50 percent of the power used for their operation. For example, in vapor-compression driven cooling systems, the power drawn by compressors alone can be as high as 30% of the power consumed by servers in a data center.

The difference in required power for dissipating the various heat loads between racks and data centers can be attributed to the additional thermodynamic work needed in the data center to cool the air. For example, racks typically use fans to move cooling fluid (e.g., air) across the heat dissipating components for cooling. Data centers in turn often implement reverse power cycles to cool heated return air from the racks. This additional work associated with moving the cooling fluid through the data center and cooling equipment consumed large amounts of energy and makes cooling large data centers difficult.

In practice, conventional data centers are cooled using one or more Computer Room Air Conditioning units, or CRAC units. The typical compressor unit in the CRAC is powered using a minimum of about thirty (30) percent of the power required to sufficiently cool the data centers. The other components, e.g., condensers, air movers (fans), etc., typically require an additional twenty (20) percent of the required cooling capacity.

As an example, a high density data center with 100 racks, each rack having a maximum power dissipation of 10 KW, generally requires 1 MW of cooling capacity. Consequently, air conditioning units having the capacity to remove 1 MW of heat generally require a minimum of 300 KW to drive the input compressor power and additional power to drive the air moving devices (e.g., fans and blowers).

Conventional data center CRAC units do not vary their cooling fluid output based on the distributed needs of the data center. Instead, these CRAC units generally operate at or near a maximum compressor power even when the heat load is reduced inside the data center. This substantially continuous operation of the CRAC units is generally designed to operate according to a worst-case scenario. That is, cooling fluid is supplied to the components at around 100 percent of the estimated cooling requirement. Often, these conventional cooling systems attempt to cool components even though they may not be operating at a level that exceeds a predetermined temperature range. Moreover, conventional systems generally measure ambient temperature at sensors located at the CRAC units, and not at the locations in the data center where the racks and heat-producing equipment is located. For at least these reasons, conventional cooling systems generally incur greater amounts of operating expenses than may be necessary to sufficiently cool the heat-generating components contained in the racks of data centers.

BRIEF DESCRIPTION OF THE DRAWINGS

FIG. **1** illustrates a schematic representation of a data center containing a cooling system in accordance with one implementation of the present invention;

FIG. **2** is a block diagram illustration of the subsystems to control a cooling system according to one implementation of the present invention;

FIG. **3**A is a flow diagram providing the objectives and operations for cooling a data center in accordance with one implementation of the present invention;

FIG. **3**B shows a flow diagram of adjusting operating characteristics in accordance with one implementation of the present invention;

FIG. **4** is a schematic illustrating the relationship among various software agents in accordance with one implementation of the present invention;

FIG. **5** is a flow diagram of the operations of various software agents in accordance with one implementation of the present invention;

FIG. **6** is a flow diagram of the operations and interactions among the rack agents and other software agents and physical structures under the rack agents' control in accordance with one implementation of the present invention;

FIG. **7** is a flow diagram of the operations and interactions among the row agents and other software agents and physical structures under the row agents' control in accordance with one implementation of the present invention; and

FIG. **8** is a flow diagram of the operations and interactions among the CRAC agents and other software agents and physical structures under the CRAC agents' control in accordance with one implementation of the present invention.

SUMMARY OF THE INVENTION

One aspect of the invention features a method of controlling the temperature in a data center. The temperature

control includes receiving sensory data corresponding to a temperature from a subsystem in a data center, processing the sensory data by a first agent in a hierarchy of agents to determine if the subsystems in the data center is operating within a predetermined temperature range, adjusting a delivery rate for a cooling fluid using the first agent to keep the temperature range of the subsystem within the predetermined temperature range, and requesting a second agent from the hierarchy of agents to process the sensory data when the first agent cannot keep the temperature range within the predetermined temperature range unless the second agent redistributes the cooling fluid being delivered to one or more areas in the data center.

Another aspect of the invention describes a system for cooling a data center. The system includes a cooling fluid delivery controller that uses a first agent in a hierarchy of agents to control the delivery rate of a cooling fluid to a rack having one or more subsystems and components and a second agent in the hierarchy of agents to control the delivery rate of the cooling fluid to a row having one or more racks, and a cooling system controller that uses a third agent in the hierarchy of agents to control the amount of cooling fluid to output when at least the first and second agent cannot keep the one or more subsystems operating within a predetermined temperature range.

In a further aspect of the invention, a method of controlling the temperature of a rack in a data center uses a rack agent that receives sensor information and objectives to keep the subsystems and components operating within a temperature range, compares the temperature received from the sensors to the rack agent's objectives, determines whether the temperature readings meet its objectives and having the rack agent report its sensor readings to a row agent for further processing, and varies the flow of liquid cooling when the temperature reading does not meet the rack agent's objectives.

Yet another aspect of the invention controls the temperature of a row in a data center using a row agent that receives sensor information and objectives to keep the subsystems and components operating within a temperature range, compares the temperature received from the sensors to the row agent's objectives, determines whether the temperature readings meets the row agents objectives and having the row agent report its sensor readings to a CRAC agent or other row agents for further processing, and varies the flow of liquid cooling when the temperature reading does not meet the row agent's objectives.

Another aspect of the present invention controls the temperature of in a data center using a cooling system agent that receives sensor information and objectives to keep the subsystems and components operating within a temperature range, compares the temperature received from the sensors to the cooling system agent's objectives, determines whether the temperature readings meets the cooling system agents objectives and having the cooling system agent report its sensor readings to other cooling system agents for further processing, and varies the cooling system's output of a cooling liquid when the temperature reading does not meet the cooling system agent's objectives.

The details of one or more embodiments of the invention are set forth in the accompanying drawings and the description below. Other features and advantages of the invention will become apparent from the description, the drawings, and the claims.

DETAILED DESCRIPTION

According to one implementation of the present invention, a cooling system is configured to adjust cooling fluid, e.g., air, flow to various racks located throughout a data center, e.g., location that houses numerous printed circuit (PC) board electronic systems arranged in a number of racks, based upon the detected or anticipated temperatures at various locations throughout the data center. Implementations of the present invention utilize distributed agents at various points in the cooling system to direct cooling fluid (e.g., airflow) to reduce power consumption and cool more effectively.

At least one or more of the following advantages can be realized using implementations of the present invention. In one aspect, the distributed agents can better monitor events by processing information in parallel at different points on the cooling system. Individual thresholds and routines can be associated with each agent giving them limited autonomy when controlling operation of a component (e.g., rack, row, CRAC) in the cooling system. Agents can also summon assistance from other peer components or higher order components when local control does not meet certain objectives. For example, a rack agent can request assistance from another rack agent for cooling or can request additional cooling capacity from a CRAC through a CRAC or cooling system agent. In another aspect, implementations of the present invention are highly scalable as agents are distributed throughout a cooling system and added as the cooling system becomes larger and more complex. Yet another aspect of the present invention facilitates more accurate monitoring of energy levels and cooling efficiency as additional sensors can be more carefully monitored by agents in a distributed cooling environment.

FIG. **1** shows a schematic illustration of a data center **100** containing a cooling system **102**. Data center **100** includes a raised floor **104** covering wires and communication lines (not shown) located in space **106** beneath raised floor **104**. In this example, space **106** functions as a plenum to deliver cooling fluid from cooling system **102** to racks **108**, **110**, **112**, and **114**. Although data center **100** illustrated in FIG. **1** contains four racks and one cooling system, it should be understood that other data center configurations may include any number of racks and cooling systems. Accordingly, four racks are illustrated in FIG. **1** for descriptive purposes only and should not be construed to limit implementations of the present invention in any respect.

Racks **108**, **110**, **112**, and **114** generally house a variety of components including servers, networking equipment, and/or storage drives, Alternatively, racks can also include processors, micro-controllers, high speed video cards, memories, semi-conductor devices, and other components that need cooling. In operation, the subsystems and corresponding components can be used to perform various functions including computing, switching, routing, and displaying, using electronic and other mediums. In the performance of these functions, the components, and therefore the subsystems, generally dissipate relatively large amounts of heat. As racks **108**, **110**, **112**, and **114** are designed to include a larger number of subsystems, they may require substantially large amounts of cooling fluid to keep the subsystems and the components operating within a predetermined temperature range. For example, it may be difficult to control the cooling fluid used on a rack or set of racks having forty (40) or more subsystems operating within a temperature range.

According to one aspect of the present invention, agents distributed throughout subsystems and cooling systems in data center **100** can be used to more efficiently deliver cooling fluid to the components and the subsystems located in the racks **108**, **110**, **112**, and **114** based upon measuring

and controlling heat loads and the power consumed by cooling system **102** to supply the cooling fluid.

Cooling system **102** generally includes a fan **116** for supplying cooling fluid into space **106** (e.g., plenum). Air is supplied into fan **116** from the heated air in data center **100** as indicated by arrows **118** and **120**. In operation, the heated air enters into cooling system **102** as indicated by arrow **118** and is cooled by a cooling coil **122**, a compressor **124**, and a condenser **126** operating together with agents of the present invention in various configurations.

Depending upon the cooling fluid needed by heat loads in the racks **108**, **110**, **112**, and **114**, cooling system **102** may be operated at various levels using agents designed in accordance with implementations of the present invention. For example, the capacity (e.g., the amount of work exerted on the refrigerant) of compressor **124** and the speed of the fan **116** may both be modified by agents to thereby control the temperature and the amount of cooling fluid flow delivered to the racks **108**, **110**, **112**, and **114**. To achieve this, compressor **124** is a variable capacity compressor and the fan **116** is a variable speed fan. Agents of the present implementation can control compressor **124** by either increasing or decreasing the mass flow rate of its refrigerant. Because the specific type of compressor **124** and fan **116** to be employed with the embodiments of the invention may vary according to particular needs, the invention is not limited to any specific type of compressor or fan. Instead, the choice of compressor **124** and fan **116** may depend upon many factors, including cooling requirements, costs, operating expenses, reliability and other operating characteristics. Generally, a suitable compressor **124** and fan **116** is capable of accomplishing certain aspects of the invention.

The cooling fluid generally flows from fan **116** and into space **106** (e.g., plenum) as indicated by the arrow **128**. The cooling fluid flows out of raised floor **104** through dynamically controllable vent tiles **130**, **132**, and **134** that agents designed in accordance with the present invention operate upon to control the velocity and the volume flow of the cooling fluid. In one respect, agents regulate the velocity and the volume flow rate of the cooling fluid by varying the shape and/or opening size of the vent tiles **130**, **132** and **134**. By using agents of the present invention in this manner, racks **108**, **110**, **112**, and **114** may receive substantially individualized and localized amounts of cooling fluid according to their heat loads.

Dotted arrows **136** indicate the general direction of travel of the cooling fluid and solid arrows **138** indicate the general direction of travel of the cooling fluid being heated by the heat dissipating components located within racks **108**, **110**, **112**, and **114**. As depicted in FIG. **1**, the areas between racks **108**, **110**, **112**, and **114** may comprise either cool aisles **140** or hot aisles **142**, or a combination thereof. Cool aisles **140** are those aisles including vent tiles **130–134** and thus receive cooling fluid for delivery to racks **108**, **110**, **112**, and **114**. Hot aisles **142** are those aisles that receive air heated by the heat dissipating components in racks **108**, **110**, **112**, and **114**.

In addition, various sections of each of racks **108**, **110**, **112**, and **114** may also receive substantially individualized amounts of cooling fluid. By way of example, if the bottom halves of racks **108** and **110** are operating at maximum power, thereby dissipating a maximum level of heat load, and the upper halves are operating at little or no power, agents operating vent tile **130** can facilitate a relatively high volume flow rate with a relatively low velocity. In this manner, the cooling fluid may operate to generally supply greater cooling to the lower halves of racks **108** and **110**, whereas the upper halves receive relatively lesser amounts of cooling fluid. In addition, if the upper halves of racks **112** and **114** are operating at approximately 50 percent of their maximum power, and the lower halves are operating at little or no power, agents operating vent tile **132** can facilitate a relatively low volume flow rate with a relatively high velocity to better cool the upper halves of these racks. In this manner, agents designed in accordance with the present invention can control cooling fluid flow and momentum to adequately reach and cool upper and lower halves of racks **112** and **114**.

Agents of the present invention may also vary the amount of cooling fluid supplied to the racks as the cooling requirements vary according to the heat loads in racks **108**, **110**, **112**, and **114**, and the subsequent variations in the volume flow rate of the cooling fluid in cooling system **102**. For example, if the heat load in racks **108**, **110**, **112**, and **114** increases, agents in cooling system **102** may operate in accordance with implementations of the present invention to increase the supply of cooling fluid. Alternatively, if the heat load in the racks **108**, **110**, **112**, and **114** generally decreases, agents in cooling system **102** may operate similarly to decrease the supply of cooling fluid. Agents use vent tiles **130**, **132**, and **134** to provide localized flow control of the cooling fluid to racks **108**, **110**, **112**, and **114**. Alternate agents operate cooling system **102** to provide global control of the cooling fluid flow. The combination of agents used to control the cooling fluid used by cooling system **102** maintains racks **108**, **110**, **112**, and **114** at a predetermined temperature range with potentially reduced energy requirements compared with conventional data center cooling systems.

In one implementation of the present invention, the cooling fluid supply flowing through each of the vent tiles **130**, **132** and **134** is maintained at a relatively uniform pressure. To achieve this uniformity, space **106** may include a divider **144** having a length extending substantially along the entire length of space **106** and generally in the direction perpendicular to the plane of FIG. **1**. In one implementation, divider **144** has a width extending from cooling system **102** to substantially the end of space **106**. This configuration of divider **144** in space **106** creates a gap **146** between a side edge of divider **144** and a side surface of the space as illustrated in FIG. **1**. Divider **144** generally divides space **106** into two relatively separate chambers **148** and **150**. Chamber **148** is in fluid communication with the outlet of fan **116** while chamber **150** is in fluid communication with the chamber **148** substantially through gap **146**. In this manner, the cooling fluid flow originating from fan **116** travels substantially along the entire width of space **106** and through chamber **148** for the cooling fluid to flow into chamber **150**.

A substantially uniform pressure is maintained in chamber **150** by this careful introduction of the cooling fluid. Initially, fan **116** may cause a relatively large amount of turbulence as the cooling fluid is introduced in chamber **148** at a rapid rate. This turbulence is generally greater at the outlet of fan **116** and decreases proportionally as the distance from the outlet increases. By the time the cooling fluid has traveled along chamber **148** and entered into chamber **150** it is substantially stabilized and able to provide a relatively consistent cooling fluid pressure supply for vent tiles **130**, **132** and **134**.

In one implementation, the pressure of the cooling fluid located in chamber **150** is measured by a pressure sensor **152**. Pressure sensor **152** detects changes in the pressure of the cooling fluid located within chamber **150**. Changes in

pressure are relayed to one or more agents in accordance with implementations of the present invention. As described in further detail later herein, these agents can modify operation of the data center **100**.

The capacity of compressor **124** may also vary depending on changes in the temperature of the cooling fluid in chamber **150**. To measure these changes, a plenum temperature sensor **154** located within chamber **150** relays temperature measurements to agents in accordance with the present invention and cooling system **102**. Additional temperature sensors, not illustrated in FIG. **1**, may be placed in many other positions in the data center to detect localized temperature changes and gather information for processing by agents.

Agents executing on computer system **145** receive input from the temperature sensors, and send control commands to control the aperture of vent tiles **130**, **132** and **134**, and the speed of compressor **124** and fan **116**. In one implementation, many different agents execute on computer system **145** but alternate implementations may include computer systems or microprocessors running agent software distributed throughout data center **100**. In either of these or other implementations, agents balance thermal provisioning needs at the rack, row, and CRAC level to maintain an optimal, economical and efficient level of cooling in the data center.

In general, agents send commands through computer system **145** and other processor units to vent tiles **130**, **132** and **134**, fan **116** compressor **124** and any other portions of cooling system **102** and data center **100** responsible for cooling subsystems and components, commands to compressor **124** generally maintain the temperature of the cooling fluid within the second chamber **150** at a substantially constant level. In addition, the capacity of the compressor **124** may also vary according to detected and/or anticipated changes in heat loads generated in the racks **108**, **110**, **112**, and **114**. As an example, compressor **124** capacity may be increased as the heat loads generated in the racks **108**, **110**, **112**, and **114** increase. Similarly, other commands sent to fan **116** may operate to alter the output of the cooling fluid or air from fan **116** and stabilize pressure in chamber **150** within the plenum. Agents further operate vent tiles **130**, **132** and **134** to also balance the flow of cooling fluid and more precisely direct heat extraction from the different subsystems and components. Operating these agents together achieves more responsive cooling characteristics but results in substantial energy savings over known cooling systems expending energy as needed to cool particular components and subsystems contained in the racks.

FIG. **2** is a block diagram of a control scheme **200** for a cooling system **202** in accordance with one implementation of the present invention. Control scheme **200** includes a vent tile controller **204** and vent tile memory **220** capable of controlling vent tiles **206**, **208**, and **210** through a vent tile interface **218** and responsive to input from temperature sensors **212**, **214** and **216**. Additionally, control scheme **200** includes a computer room air conditioning (hereinafter "CRAC") controller and CRAC memory **230**, a compressor **224**, and fan **226**, a compressor/fan interface **228** and receives data from plenum temperature sensor **234** and plenum pressure sensor **232**. Agents designed in accordance with the present invention can be executed on vent tile controller **204**, CRAC controller **222**, or any other processors distributed over control scheme **200**.

In one implementation, a rack agent and a row agent detecting or anticipating change in the temperature of the respective racks and/or portions thereof, cause vent tile controller **204** to manipulate the corresponding vents and compensate for the change in temperature due to changes the volume flow rate, velocity, and other similar characteristics of the cooling fluid. Racks and rows of racks (hereinafter "rows") and/or portions thereof receive substantially only the amount of cooling fluid necessary to maintain the temperature of the portions of the racks within a predetermined temperature range.

Vent tile interface **218** acts as an interface between the vent tile controller **204** and the components for operating vent tiles **206**, **208**, and **210** including controlling the opening in the vent tiles and directing the cooling fluid flow through the vent tiles.

Vent tile controller **204** may also be interfaced with vent tile memory **220** and loaded with agents of the present invention and other software executed by vent tile controller **204** and providing functionality to cooling system **202**. Vent tile memory **220** may also be configured to store data/information to manipulate each of vent tiles **206**, **208** and **210** in response to the detected and/or anticipated temperatures in the racks. For example, rack agents or row agents use vent tile controller **204** to operate vent tile **206** to increase the volume flow rate and decrease the velocity of the cooling fluid flowing there through in response to a detected increase in the heat load of a lower portion of a corresponding rack. Vent tile memory **220** may be implemented as a combination of volatile and non-volatile memory, such as dynamic random access memory (DRAM), EEPROM, flash memory, or other storage mediums.

Rack agents and row agents or vent tile controller **204** may be configured to relay data/information pertaining to the flow of cooling fluid through the vent tiles **206**, **208** and **210** to a CRAC controller **222**. In this implementation, CRAC controller **222** is configured to control the operation of cooling system **202**, including compressor **224**, fan **226**, and other systems used in performing heat exchange functions. CRAC controller **222** may comprise a microprocessor, a micro-controller, ASIC (application-specific integrated circuits), and other hardware necessary to perform functions associated with implementation of the present invention.

Compressor/fan interface electronics **228** may be provided to act as an interface between the CRAC controller **222** and the components for operating compressor **224** and fan **226**, including varying the voltage supply to change the respective speeds of the compressor and the fan.

CRAC controller **222** may also be interfaced with CRAC memory **230** and rack agents and row agents or software providing the functionality of cooling system **202** including compressor **224** and fan **226**. A CRAC agent configured to control the CRAC and cooling system **202** may be executed by CRAC controller **222**. CRAC memory **230** may also be configured to provide storage for data/information for manipulating compressor **224** and fan **226** in response to variations in the cooling fluid flow through the vent tiles **206**, **208** and **210**. For example, a CRAC agent executing on CRAC controller **222** may operate compressor **224** and fan **226** to increase/decrease the volume flow rate of the cooling fluid flow in response to various changes in the volume flow rate and temperature being collected and/or analyzed by other agents. In one implementation, CRAC agents use a look up table stored in memory **230** and including information describing the speed of compressor **224** and fan **226** output necessary for a detected change in the volume flow rate. CRAC agents of the present invention can incrementally vary the speed of compressor **224** and fan **226** in

response to detected changes in the volume flow rate. CRAC memory **230** may be implemented as a combination of volatile and non-volatile memory, such as dynamic random access memory (DRAM), EEPROM, flash memory, and other storage mediums.

As an alternate implementation, CRAC agent and CRAC controller **222** operates in response to data/information detected by plenum temperature sensor and plenum pressure sensor **232**. These additional sensors allow a CRAC agent to control CRAC controller **222** and cooling system **202** components with little or no input from vent tile controller **204**. This independent operation of CRAC agents and CRAC controller **222** is indicated by the dotted-line connection between CRAC controller **222** and vent tile controller **204**.

Plenum pressure sensor **232** is configured to measure the pressure within the upper chamber of the plenum as described previously. The pressure measurements and/or any discernable changes in the pressure measurements obtained by plenum pressure sensor **232** may be relayed to the CRAC agent and CRAC controller **222**. In addition, plenum temperature sensor **234** may be configured to measure the temperature of the cooling fluid within the upper chamber of the plenum. Similarly, temperature measurements and/or any discernable changes in the temperature obtained by the plenum temperature sensor **232** may also be relayed to CRAC agent and CRAC controller **222**.

The CRAC agent executing on CRAC controller **222** may manipulate the capacity of the compressor **224** based upon the measured temperature of the cooling fluid. By properly adjusting the output of compressor **224**, the temperature of the cooling fluid within the upper chamber of the plenum may be maintained at a substantially constant level. Similarly, CRAC agent manipulates the output of fan **226** based upon the measured pressure of the fluid in the upper chamber of the plenum to vary the amount of cooling fluid supplied to maintain the pressure of the cooling fluid within the upper chamber at a substantially uniform level. According, CRAC agent and CRAC controller **222** operate to increase the speed of compressor **224** and fan **226** thereby expending a greater amount of energy as the heat load in the racks requires such an increase. This avoids operating compressor **224** and fan **226** at substantially maximum or constant energy levels and reduces the amount of energy used by cooling system **202**.

CRAC memory **230** may also be configured to store data/information used by CRAC agents to control the speed of compressor **224** and output of fan **226** in response to the measured pressure measured within the upper portion of the plenum. For example, CRAC agent and CRAC controller **222** may increase the output of compressor **224** and fan **226** by a relatively large amount in response to a relatively large decrease in the measured pressure. This control keeps pressure within the upper portion of the plenum at a substantially uniform level even when the pressures change by a relatively sharp amount.

FIG. **3**A is a flow chart diagram **300** providing the objectives and operations for cooling a data center in accordance with one implementation of the present invention. Agents distributed throughout a data center work together, as described in further detail later herein, to achieve the overall objective of cooling a data center with reduced energy requirements. To achieve the overall objective, different agents may be assigned portions of the overall objective and tasks to monitor and parameters for operating the data center.

In a first implementation described in conjunction with FIG. **3**A, agents detect the temperature of components in the racks and respond by moving vent tiles to adjust the volume flow of the vent tiles. As needed, other agents responsive to these component temperatures may be used to modify the output of the cooling system to meet the overall objective of cooling the data center. For example, these other agents may modify cooling system components including fan, compressor, heat-exchanger, and any other parts of the cooling system. In a second and alternate implementation described subsequently, some agents monitor the temperature to adjust the volume flow of the cooling fluid while other agents separately modify the output of the cooling system in response to measuring the cooling fluid pressure rather than the temperature of the cooling fluid. This latter implementation is described in conjunction with FIG. **3**B.

In the former implementation in FIG. **3**A, various agents of the present invention activate a cooling system and open one or more vent tiles (**302**). A CRAC agent may initially set the fan, compressor, and other portions of the cooling system to initial values to be changed later as the cooling system operates. Rack and row agents adjust vent tile openings and positions and may communicate with the CRAC agent as described in further detail later herein.

Agents receive component temperatures (Tc's) sensed by one or more distributed temperature sensors (**304**). The number of sensors used depends on the equipment configuration and the accuracy required in monitoring and adjusting the cooling. For example, a larger number of sensors distributed appropriately may generate more information and control the cooling more accurately and efficiently. Component temperature (Tc) corresponds to the heat load of a component dissipating heat and, in some cases, corresponds to the temperature of larger subsystems contained in a rack or racks. In one implementation, component temperature (Tc) values are based upon particular temperature dissipation specifications provided by the manufacturers of the components or subsystems. Alternatively, Tc's may be based upon temperatures determined empirically through rigorous temperature measurements as the components are operated.

One or more agents determine whether the measured component temperatures are within a predetermined range of operating temperatures (**306**). In one implementation, the operating temperature is a temperature range between a maximum set point temperature (Tmax,set) and a minimum set point temperature (Tmin,set). The operating temperature range of the subsystems and components located in the racks can be determined according to a number of factors including: the operating temperatures set forth by the manufacturers or determining an optimal range of operating temperatures for a subsystem or component empirically.

A system or component continues to be monitored or sensed (**304**) as long as the subsystems or components are in the operating temperature range and properly cooled. Both Tmin,set and Tmax,set are threshold temperatures in the operating range used to determine whether to increase or decrease the flow of cooling fluid delivered to the racks and components. As previously described, this predetermined temperature range may be based upon a plurality of factors including a determination that the operating temperature range substantially optimizes the performance of the subsystems and components contained in the racks.

In the event an operating system or component falls outside the operating temperature range, agents determine whether the sensed temperature equals or falls below the Tmin,set (**308**). Agents operate the vent controller to decrease the volume flow rate and/or the velocity of cooling fluid to those racks (**312**) depending on the degree that the Tc's of the components in the racks are below the Tmin,set value.

Agents may also determine of whether to decrease either or both the volume flow rate and the velocity of the cooling fluid (**312**) based upon the detected temperature in certain portions of a rack. For example, if the subsystems on a bottom half of a rack are operating at 50 percent of maximum capacity, and the subsystems on an upper half of the rack are operating at or near zero capacity, the velocity of the cooling fluid may be reduced whereas the volume flow rate may remain substantially constant. This may occur, for example, because the cooling fluid need not travel a relatively long distance but may still need to supply the bottom half with a sufficient amount of cooling fluid.

Alternatively, if the component temperatures (Tc's) of some of the racks exceed the Tmin,set (**308**) or exceed the Tmax,set, agents may operate the vent controllers to increase the volume flow rate and/or the velocity of cooling fluid to those racks (**310**). Once again, agents can determine whether to increase either or both the volume flow rate and the velocity of the cooling fluid based upon the detected temperature of the racks or at specific portions of the rack. For example, if the subsystems on the top half of a rack are operating at 100 percent capacity, and the subsystems on a bottom half of the rack are operating at or near zero capacity, the velocity and the volume flow rate of the cooling fluid may both be increased. This may occur, for example, because the cooling fluid must travel a relatively long distance and supply the top half with a sufficient amount of cooling fluid.

In one aspect of the present invention, agents can affect the temperature objective by incrementally varying the cooling fluid flow through the vent tiles by either decreasing the volume flow rate and/or velocity of the cooling fluid flow (**312**) or increasing the volume flow rate and/or velocity of the cooling fluid (**310**). By repeating this process a number of times, agents can bring the temperature of the rack substantially within the predetermined range. There may be instances, however, where an agent cannot change a vent tile to change the flow rate or velocity of the cooling fluid and bring the temperature for that rack (Tc) within the predetermined range.

In addition to changing vent tile positions, agents may also determine whether to decrease (**318**) or increase (**316**) the cooling fluid output through the cooling system controller. These changes modify operation of several cooling system components including, the compressor, the fan, and any other component associated with the cooling system portion. In one implementation, agents determine whether to modify the cooling fluid output in response to the manipulations made to the vent tiles by the vent controller. For example, if the total amount of decreases in the volume flow rates of the cooling fluid exceeds the total amount of increases in the volume flow rates flow of the cooling fluid, agents may instruct the cooling system controller operate to decrease the cooling fluid output (**316**). Alternatively, if the total amount of increases in the volume flow rates of the cooling fluid exceeds the total amount of decreases, agents may instruct the cooling system controller to increase the cooling system output (**318**).

Agents continue to receive sense information for the component temperatures (Tc's) (**304**) to determine if the changes in the volume flow rates of the cooling fluid correspond to the cooling fluid output changes. The agents continue to receive sense information on the component temperatures as long as the cooling system remains in operation cooling the subsystems and components. In many cases, the component temperatures (Tc's) in some subsystems and components in the racks may fall below the Tmin,set, whereas the Tc's of other racks may exceed the Tmax,set. Consequently, many of the agents operate substantially simultaneously to effectuate the proper degree of cooling on the various racks and may operate both independently or in collectively to achieve their overall objectives.

FIG. **3**B is a flow chart diagram providing the objectives and operations for cooling a data center in accordance with an alternate implementation of the present invention that uses both temperature and pressure measurements. In this implementation, agents adjust the volume flow of the cooling fluid in response to monitoring the temperature and change the output of the cooling system elements including the fan, compressor, heat-exchanger, or any other parts of the cooling system based on cooling fluid pressure measurements. Because these agents modify volume flow of the cooling fluid based on temperature measurements as described above, similarly numbered operations previously described with respect to FIG. **3**A will not be discussed.

In this implementation, agents controlling cooling fluid output instead receive sense information measuring the cooling fluid pressure in the plenum as it is delivered to vent tiles (**320**). In one implementation, the pressure is detected using one or more pressure sensors distributed at various points along the plenum as needed to make an accurate measurement. This measured pressure may be relayed to the cooling system controller **222** and corresponding agent for further processing. In one implementation, an agent associated with cooling system controller (CRAC) **222** determines whether the measured pressure is within a predetermined pressure range.

The agent comparing the measured pressure with the predetermined pressure range, determines whether the measured pressure (P) is below or equal to a minimum pressure set point (Pmin,set) (**322**). The predetermined pressure range may be based upon a number of factors including, for example, different threshold operating pressures or range of pressures determined through testing to substantially optimize the performance of the cooling fluid output passing through the vent tiles. In general, the predetermined pressure range includes threshold pressures for determining whether an increase or decrease in cooling fluid supply within the proper portion of the plenum is appropriate. The predetermined pressure range is bounded by a minimum set point pressure (Pmin,set) and a maximum set point pressure (Pmax,set).

The predetermined pressure range may be set according to a maximum desired volume flow rate and/or velocity of the cooling fluid to be ejected through the vent tiles. In addition, the predetermined pressure range may be the substantial optimum operating pressure desired for controlling the flow of cooling fluid through the vent tiles.

If the measured pressure is within the predetermined pressure range, the agents continue to receive and monitor the cooling fluid pressure (**320**). However, if the agents determine that the measured pressure is below or equal to the (Pmin,set), agents can operate cooling system controller to increase the cooling fluid output (**326**). For example, cooling fluid output can be increased by modifying the operation of the compressor, increasing the compressor capacity, or the fan output. Otherwise, if the pressure is determined to exceed Pmin,set, or even exceed Pmax,set, an agent operates cooling system controller **222** to decrease cooling fluid output by decreasing the compressor capacity, the fan output and/or any other component of the cooling systems (**328**).

Agents continue to receive sense information for the cooling fluid pressures (**320**). The agents continue to receive

sense information on the cooling fluid pressures as long as the cooling system remains in operation cooling the subsystems and components. In many cases, the cooling fluid pressures are varying to different degrees and consequently and the agents operate substantially simultaneously to effectuate the proper pressure of fluid on the various racks and may operate both independently or in collectively to achieve their overall objectives.

FIG. **4** is a block diagram illustrating the relationship among various software agents and the physical structures of a cooling system in accordance with one implementation of the present invention. In this implementation, a data center cooling system **400** includes agents **402** and corresponding physical structures **404**. Agents **402** include rack agents **406**, row agents **410**, and CRAC agents **414** while physical structures **404** include racks of vent tiles **408**, rows of vent tiles **412**, fan **416**, and compressor **418**.

Rack agents **406** operate various aspects of a rack including opening and closing of rack vent tiles **408** in one or more racks. Each vent tile in rack vent tiles **408** provides cooling fluid to at least one rack of components and subsystems that need cooling. Further, rack agents **406** also operate temperature sensors on or near the racks and gather corresponding temperature information. Information collected by rack agent **406** can be processed directly by rack agent **406** or passed along to other agents in cooling system **400** to meet their respective objectives in the cooling process.

Row agents **410** operate row vent tiles **412** used for cooling multiple racks within a row. Row vent tiles **412** can be operated to provide one or more specific rack vent tiles **408** cooling fluid. These row vent tiles **412** can be located internal to the equipment being cooled or external where there are providing cooling fluid to other rack or row vent tiles. Like rack agents **406**, row agents **410** operate temperature sensors and other sensors used to gather information for the temperature and other sense information. Row agents **410** can also consolidate information provided from other agents, for example rack agents **406**, and use the consolidated temperature and/or cooling information to further meet objectives associated with row agents **410** and used in the cooling process.

CRAC agents **414** operate cooling system equipment including fans, compressors, and heat exchangers and any other equipment used for removing heat from a cooling liquid. Generally, CRAC agents **414** receive and consolidate temperature, pressure, and other information sensed by other agents in the cooling system **400**. In response to this information, CRAC agents **414** control fan **416** (typically to modify coolant flow) and compressor **418** (typically to affect coolant temperature through the use of a heat exchange condenser).

CRAC agents **414** can control multiple fan **416**, compressor **418**, and other cooling equipment in the corresponding one or more CRAC. Additionally, CRAC agents **414** communicate information on the operation and status of the CRAC to other agents and subsystems using bidirectional or two-way wired or wireless communication mechanisms. This can be used by the various agents for reporting purposes as well as to assist the agents in meeting their objectives in the overall cooling process. For example, row agents **410** engage in two-way communication of information concerning cooling provisioning with CRAC Agents **414**.

FIG. **5** depicts a flow chart diagram **500** of the operations between various software agents and the physical structures they control in accordance with one implementation of the present invention. Initially, a rack agent receives periodic sensor data input from a temperature sensor in its rack **(502)**. Alternatively, the sensor data input could be provided from a pressure sensor in the rack or a plenum leading to the rack. In either implementation, the rack agent then compares this sensor data against the temperature objectives set for that particular rack **(504)**.

A rack temperature objective can be implemented in various ways, and can be set or affected by automated routines and formulas, as well as manual operator input. In one implementation, the rack objective could be to keep the rack temperature sensor data within a certain temperature range. The rack objective could have the range vary based upon computing loads or the type of equipment in the particular rack. It could also focus on any variance in the sensor temperature readings over time. In yet another implementation, the rack objective temperature range itself could vary based upon statistical formulas that, for example, are tailored to the macro temperature conditions in and heat exchange capabilities of the data center. Dynamically varying objectives could be set to anticipate variations in temperature based upon historical experience, and/or readings from and actions of surrounding sensors and agents. For example, temperatures during the evening hours or winter seasons may be cooler and require less cooling from the cooling system.

If one or more sensor readings indicate that the rack's objective has been met **(504)**, the rack agent takes no further action and continues to receive periodic sensor input **(502)**. However, should the one or more sensor readings not meet the rack's objective, the rack agent then determines whether it can vary the temperature level autonomously **(506)**. In one implementation, rack agents can autonomously vary temperature through opening or shutting a limited number of rack vent tiles associated with that rack. Based on these and other controls, the rack agent determines whether it can meet its objectives through opening and closing rack vent tiles under its direct control. If the rack agent can affect the temperature itself adequately, it controls its rack vent tiles **(508)** by either opening or shutting them to locally provision more coolant flow to its rack.

In the situation where the temperature objectives of the rack cannot be met through such local provisioning, the rack agent communicates with its associated row agent **(510)**. The row agent receives input from a plurality of rack agents under its control, and aggregates the row agent data **(512)** to determine whether the objectives of that row are being met **(514)**.

As with the rack objectives described previously, row objectives can be based on factors that include dynamically calculated formulas, real-time data, and manual operator input in order to meet the higher-level temperature provisioning needs of that rack and its surroundings. As rack agent objectives are compared against the conditions as reported by a number of rack agents in that row, row objectives can also take into account, for example, determining how many row agents have not met or are having difficulty meeting their objectives.

If the row agent determines that its own row temperature objectives are being met the row agent takes no further corrective action. In one implementation, as long as the row temperature objectives are being met the row agent does not take further corrective action unless a particular rack or racks in that row indicate to the row they are not meeting their respective cooling objectives and need assistance. In general, the row agent cannot override individual rack agent

objectives and similarly, rack agents each must meet their objectives and communicate the need for more or less cooling and cannot rely on the row agents to meet their rack agent objectives.

Should the row agent not meet their objectives, the row agent determines whether changing the physical structures under its control—namely, opening and/or closing rack vent tiles associated with that rack—will resolve the temperature variation (**516**). If so, it controls rack vent tiles (**518**) in order to vary the coolant flow to the particular row, or to particular racks within that row. Of course, the row agent cannot operate the rack vent tiles if it would cause the rack agents to not meet their rack agent objectives.

Should the row agent be unable to resolve the rack agent temperature variance in its row without further assistance, it communicates to one or more CRAC agents (**520**). A CRAC agent aggregates such row data (**522**), and determines whether its objectives are met (**524**). In one implementation, no further action is taken by the CRAC agent when the objectives for the portion of the data center affected by the CRAC are met.

In the event, the temperature objectives of the CRAC agent are not met, the CRAC agent provisions a change in cooling (**526**). For example, the CRAC agent provisions this cooling change by controlling the rate of heat exchange of the coolant, or the coolant flow, typically through controlling the speed of the fan or fans associated with the CRAC.

FIG. **6** is a flow chart diagram of system **600**, providing the operations performed by a rack agent in accordance with one implementation of the present invention. In this implementation, the rack agent dynamically receives and/or calculates its temperature objectives (**602**). As previously described, these temperature objectives can be affected through historical experience, formulaic algorithm, and/or manual operator input. The rack agent generally receives temperature sensor input (**604**) from sensor(s) placed on or near the heat-generating equipment in the particular rack.

The rack agent compares the temperature received from the sensors to the rack agent's temperature objectives (**606**), and determines whether the temperature readings meet its objectives. If they do, the rack agent reports its sensor readings to a row agent for further processing (**616**), and returns to receiving sensor input.

If the temperature reading does not meet the rack agent's objectives, the rack agent varies the flow of coolant by opening or closing the vent tiles under its control (**608**). If the temperature in the rack is too warm for the agent's objectives, the rack agent opens the vent tiles. If the temperature is too cool, the agent closes the vent tiles under its control, reducing the coolant flow to the rack and allowing for more economical provisioning of cooling fluid in the data center.

In one implementation, after controlling the vent tiles, the rack agent polls for additional temperature sensor readings (**610**), and compares those new readings with its temperature objectives (**612**). Should the rack agent's temperature objectives still not be attained despite adjusting the cooling controls for which it is responsible, the rack agent communicates with the row agent for assistance (**614**).

FIG. **7** is a flow chart diagram of system **700**, depicting the operations associated with a row agent in accordance with one implementation of the present invention. A row agent receives and/or dynamically calculates its own temperature objectives using one or more of the previously described operations (**702**). The row agent then receives ongoing sensory temperature communication from a number of rack agents that comprise its row, along with periodic communication from other row agents, which are aggregated together (**704**) to form a snapshot of the thermal provisioning needs of the row.

The row agent compares this aggregate sensory input to its row objectives (**706**) to determine whether the row sensory temperatures are within its objectives. Should the objectives be met, the row agent returns to poll for subsequent temperature sensor data.

If the row agent's objectives are not met, the row agent controls the vent tiles and flow of cooling fluid through the plenum in the row (**708**). The row agent then receives temperature sensor input (**710**), in order to determine whether controlling the vent tiles in its row has met its temperature objectives (**712**). If so, the row agent returns to receiving and aggregating sensory data (**704**). If the objectives are still not met, the row agent communicates with other adjacent row agents for assistance in cooling (**714**). In response, adjacent or nearby row agents may shunt a portion of the cooling fluid to the requesting row agent and facilitate meeting the particular row agents objective in keeping the subsystems and components at the proper temperature range.

The row agent then receives additional temperature sensory input (**716**), comparing it again against its objectives (**718**). If its objectives are still not met, the row agent communicates with the CRAC agent (**720**) for assistance in increasing the heat exchange or flow of coolant.

FIG. **8** is a flow chart diagram of system **800**, depicting the operations associated with a CRAC agent in accordance with one implementation of the present invention. Initially, the CRAC agent calculates and/or receives temperature objectives for its CRAC (**802**). The CRAC agent receives temperature sensor input and communication from row agents which it aggregates (**804**) in order to determine whether its temperature objectives are being met (**806**). If its objectives are being met, the CRAC agent continues polling for temperature sensor input (**804**).

If the CRAC agent's objectives are not being met, the CRAC agent adjusts the cooling fluid volume (**808**). In one implementation, this generally involves increasing or decreasing the fan speed at which cooled air is circulated into the data center from that CRAC. The CRAC then receives additional temperature input (**810**), and determines whether its CRAC agent objectives are still not met (**812**).

If they are not yet met, the CRAC agent adjusts the heat exchange of the coolant fluid (**814**). In one implementation, this typically involves increasing or decreasing the operation of the air conditioner compressor or other portions of the cooling system.

After adjusting the level of heat exchange, the CRAC agent then receives additional temperature sensor readings (**816**), and determines whether its objectives are met (**818**). Should the objectives still not be met, the CRAC agent communicates with other CRAC agents for assistance (**820**). Other adjacent or nearby CRAC agents may increase their respective cooling systems output and divert the additional cooling fluid to the requesting CRAC agent thus meeting the particular CRAC agents objective in keeping the rack, rows, subsystems and components at the proper temperature range.

Method and apparatus of the invention can be implemented in a computer program product tangibly embodied in a machine-readable storage device for execution by a programmable processor; and method steps of the invention can be performed by a programmable processor executing a

program of instructions to perform functions of the invention by operating on input data and generating output. The invention can be implemented advantageously in one or more computer programs that are executable on a programmable system including at least one programmable processor coupled to receive data and instructions from, and to transmit data and instructions to, a data storage system, at least one input device, and at least one output device. Alternatively, the programmable system could be real-time sensing and control system that works directly with implementations of the present invention over a network or connection and not be required to store data and other information on a data storage system.

Each computer program can be implemented in a high-level procedural or object-oriented programming language, or in assembly or machine language if desired; and in any case, the language can be a compiled or interpreted language. Suitable processors include, by way of example, both general and special purpose microprocessors. Generally, a processor will receive instructions and data from a read-only memory and/or a random access memory. Generally, a computer will include one or more mass storage devices for storing data files; such devices include magnetic disks, such as internal hard disks and removable disks; magneto-optical disks; and optical disks. Storage devices suitable for tangibly embodying computer program instructions and data include all forms of non-volatile memory, including by way of example semiconductor memory devices, such as EPROM, EEPROM, and flash memory devices; magnetic disks such as internal hard disks and removable disks; magneto-optical disks; and CD-ROM disks. Any of the foregoing can be supplemented by, or incorporated in, ASICs.

While specific embodiments have been described herein for purposes of illustration, various modifications may be made without departing from the spirit and scope of the invention. Accordingly, the invention is not limited to the above-described implementations, but instead is defined by the appended claims in light of their full scope of equivalents. For example, although FIG. **2** illustrates three temperature sensors **212**–**216**, it should be understood that the number of temperature sensors is not critical to the operation of the exemplary embodiment of the invention. Instead, the cooling system **202** may include any reasonably suitable number of temperature sensors to thus measure the temperatures of any reasonably suitable number of racks **108**, **110**, **112**, **114** or portions thereof. The number of temperature sensors and the temperature measurements of the number of racks may be upgradeable, e.g., scalable, to include any additional components and/or racks that may be included in the data center.

Moreover, use of the term "rack" herein generally refers additionally to sections of the racks and thus may not necessarily refer to an entire rack. Thus, the use of the term "rack" is not meant to limit certain aspects to entire racks, but instead, is implemented to simplify the description of certain embodiments of the present invention.

Although FIG. **2** illustrates a single vent controller **204** configured to operate the vent tiles **206**, **208**, and **210**, it should be understood that a plurality of vent controllers may be implemented to perform the functions of vent controller **204** without deviating from the scope and spirit of the present invention. Further, cooling system or CRAC controller **222** may operate substantially independent of vent controller **204** depending on whether CRAC controller **222** receives temperature information from vent tiles **206**, **208**, **210** and vent tile controller **204** or receives information from plenum temperature sensor **234** and plenum pressure sensor **232** instead in operation.

In general, implementations of the present invention can be used to cool a data center as well as many other spaces requiring cooling. For example, implementations of the present invention could be implemented for any kind of office-space environment or telecom infrastructure. Consequently, the infrastructure for carrying the cooling liquid is not only applicable to cold aisle/hot aisle configurations or under-flooring systems as described previously but can also be implemented in other areas or configurations depending on the particular situation. For example, cooling liquid can be carried through a tube or other enclosure placed in walls, above flooring systems, between and through equipment, or any other configuration as deemed necessary by the application of the present invention. Cooling infrastructure and methods designed in accordance with the present invention may even be routed on-chip adjacent to heat producing systems and circuitry and integrated into the chip-fabrication processes.

What is claimed is:

1. A method of controlling the temperature in a data center comprising:

receiving sensory data corresponding to a temperature from a subsystem in a data center;

processing the sensory data by a first agent in a hierarchy of agents to determine if the subsystems in the data center is operating within a predetermined temperature range;

adjusting a delivery rate for a cooling fluid using the first agent to keep the temperature range of the subsystem within the predetermined temperature range; and

requesting a second agent from the hierarchy of agents to process the sensory data when the first agent cannot keep the temperature range within the predetermined temperature range unless the second agent redistributes the cooling fluid being delivered to one or more areas in the data center.

2. The method of claim **1** further comprising:

determining with a third agent from the hierarchy of agents the amount of cooling fluid to output when at least the first and second agent cannot keep the subsystem operating within the predetermined temperature range.

3. The method of claim **2** wherein the third agent is a cooling system agent that monitors and controls one or more cooling systems that deliver a cooling fluid to the racks and rows according to the first agent and second agent.

4. The method of claim **1** wherein the sensory data is derived from one or more of the following: a temperature measurement of the at least one subsystem, a temperature measurement in a plenum, and a pressure measurement in a plenum.

5. The method of claim **1** wherein the first agent is a rack agent that monitors and controls cooling for a rack of subsystems and corresponding components.

6. The method of claim **1** wherein the second agent is a row agent that monitors and controls the cooling for a row of racks having subsystems and corresponding components contained therein.

7. The method of claim **1** wherein the hierarchy of agents corresponds to a hierarchy of subsystems and components in the data center and each agent is responsible for maintaining that each hierarchical portion of the subsystems operate within a predetermined temperature range.

8. The method of claim **1** wherein adjusting a delivery rate for a cooling fluid changes the volume of cooling liquid being delivered.

9. The method of claim **1** wherein redistributing the cooling fluid includes decreasing the amount of cooling fluid being delivered in one area of the data center and increasing the amount of cooling fluid being delivered to another area of the data center.

10. The method of claim **1** further comprising:

determining with a third agent from a hierarchy of agents the amount of cooling fluid to output when a pressure level associated with the cooling fluid output is not operating within the predetermined pressure range.

11. A system for cooling a data center, comprising:

a cooling fluid delivery controller that uses a first agent in a hierarchy of agents to control the delivery rate of a cooling fluid to a rack having one or more subsystems and components and a second agent in the hierarchy of agents to control the delivery rate of the cooling fluid to a row having one or more racks; and

a cooling system controller that uses a third agent in the hierarchy of agents to control the amount of cooling fluid to output when at least the first and second agent cannot keep the one or more subsystems operating within a predetermined temperature range.

12. The system of claim **11** wherein the cooling fluid delivery controller is used to control vent tiles delivering a gas.

13. The system of claim **11** wherein the cooling fluid delivery controller is used to control spray devices delivering a liquid.

14. The system of claim **11** wherein the first agent is processed by the vent tile controller and the second agent is processed by another vent tile controller.

15. The system of claim **11** wherein the second agent from the hierarchy of processes redistributes the cooling fluid being delivered to one or more areas in the data center when the first agent cannot keep the temperature of the subsystem within the predetermined temperature range.

16. The system of claim **11** further comprising one or more sensors capable of measuring one or more of the following characteristics: a temperature measurement of at least one subsystem, a temperature measurement in a plenum, and a pressure measurement in a plenum.

17. The system of claim **11** wherein the first agent is a rack agent that monitors and controls cooling for a rack of subsystems and corresponding components.

18. The system of claim **17** wherein the delivery of the cooling fluid affects the volume of cooling liquid being delivered.

19. The system of claim **11** wherein the second agent is a row agent that monitors and controls the cooling for a row of racks having subsystems and corresponding components contained therein.

20. The system of claim **11** wherein the third agent is a cooling system agent that monitors and controls one or more cooling systems that deliver a cooling fluid to the racks and rows according to the first agent and second agent.

21. The system of claim **11** wherein the hierarchy of agents corresponds to a hierarchy of subsystems and components in the data center and each agent is responsible to maintain that a hierarchical portion of the subsystems operates within a predetermined temperature range.

22. The system of claim **11** wherein redistributing the cooling fluid includes decreasing the amount of cooling fluid being delivered in one area of the data center and increasing the amount of cooling fluid being delivered to another area of the data center.

23. The system of claim **11** further comprising:

a cooling system controller that uses a third agent in the hierarchy of agents to control the amount of cooling fluid to output when a pressure level associated with the cooling fluid output indicates the subsystem or component is not operating within the predetermined pressure range.

24. An apparatus for controlling the temperature in a data center comprising:

means for receiving sensory data corresponding to a temperature from a subsystem in a data center;

means for processing the sensory data by a first agent in a hierarchy of agents to determine if the subsystems in the data center is operating within a predetermined temperature range;

means for adjusting a delivery rate for a cooling fluid using the first agent to keep the temperature range of the subsystem within the predetermined temperature range; and

means for requesting a second agent from the hierarchy of agents to process the sensory data when the first agent cannot keep the temperature range within the predetermined temperature range unless the second agent redistributes the cooling fluid being delivered to one or more areas in the data center.

25. A computer program product, tangibly stored on a computer-readable medium, for controlling the temperature in a data center, comprising instructions operable to cause a programmable processor to:

receive sensory data corresponding to a temperature from a subsystem in a data center;

process the sensory data by a first agent in a hierarchy of agents to determine if the subsystems in the data center is operating within a predetermined temperature range;

adjust a delivery rate for a cooling fluid using the first agent to keep the temperature range of the subsystem within the predetermined temperature range; and

request a second agent from the hierarchy of agents to process the sensory data when the first agent cannot keep the temperature range within the predetermined temperature range unless the second agent redistributes the cooling fluid being delivered to one or more areas in the data center.

26. A method of controlling, the temperature of a rack in a data center, comprising:

receiving sensor information and objectives by a rack agent to keep the subsystems and components operating within a temperature range;

comparing the temperature received from the sensors to the rack agent's objectives;

determining whether the temperature readings meet its objectives and having the rack agent report its sensor readings to a row agent requesting assistance from the row agent in cooling when the rack agent's temperature objectives cannot be attained; and

varying the flow of liquid cooling when the temperature reading does not meet the rack agent's objectives.

27. The method of claim **26** wherein the rack agent varies the flow of coolant by opening or closing the vent tiles.

28. A method of controlling the temperature of a row in a data center, comprising:

receiving sensor information and objectives by a row agent to keep the subsystems and components operating within a temperature range;

comparing the temperature received from the sensors to the row agent's objectives;

determining whether the temperature readings meets the row agents objectives and having the row agent report

its sensor readings requesting assistance from a CRAC agent or other row agents in cooling when the row agent's temperature objectives cannot be attained; and

varying the flow of liquid cooling when the temperature reading does not meet the row agent's objectives.

29. The method of claim **28** wherein the row agent varies the flow of coolant by opening or closing the vent tiles.

30. A method of controlling the temperature of in a data center, comprising:

receiving sensor information and objectives by a cooling system agent to keep the subsystems and components operating within a temperature range;

comparing the temperature received from the sensors to the cooling system agent's objectives;

determining whether the temperature readings meets the cooling system agents objectives and having the cooling system agent report its sensor readings to other cooling system agents and request assistance from the other cooling system agents when the cooling system agent's temperature objectives cannot be attained; and

varying the cooling system's output of a cooling liquid when the temperature reading does not meet the cooling system agent's objectives.

* * * * *

Exhibit 4

US006868683B2

(12) **United States Patent**
Bash et al.

(10) **Patent No.: US 6,868,683 B2**
(45) **Date of Patent: Mar. 22, 2005**

(54) **COOLING OF DATA CENTERS**

(75) Inventors: **Cullen E. Bash**, San Francisco, CA (US); **Chandrakant D. Patel**, Fremont, CA (US); **Abdlmonem H. Beitelmal**, Sacramento, CA (US); **Ratnesh K. Sharma**, Union City, CA (US)

(73) Assignee: **Hewlett-Packard Development Company, L.P.**, Houston, TX (US)

(*) Notice: Subject to any disclaimer, the term of this patent is extended or adjusted under 35 U.S.C. 154(b) by 14 days.

(21) Appl. No.: **10/697,690**

(22) Filed: **Oct. 31, 2003**

(65) **Prior Publication Data**

US 2004/0089009 A1 May 13, 2004

Related U.S. Application Data

(62) Division of application No. 10/262,879, filed on Oct. 3, 2002, now Pat. No. 6,775,997.

(51) **Int. Cl.**[7] **F25D 17/00**; F25D 23/12

(52) **U.S. Cl.** **62/180**; 62/259.2; 236/49.3; 454/245

(58) **Field of Search** 62/178, 180, 186, 62/89, 259.2; 236/49.3; 454/245, 253, 345, 347, 349, 352; 361/694, 695, 696

(56) **References Cited**

U.S. PATENT DOCUMENTS

4,874,127	A	10/1989	Collier	
5,345,779	A	9/1994	Feeney	
5,467,609	A	11/1995	Feeney	
5,718,628	A	2/1998	Nakazato et al.	
6,283,380	B1	9/2001	Nakanishi et al.	
6,374,267	B1	4/2002	Tam	
6,412,292	B2	7/2002	Spinazzola et al.	
6,494,050	B2	12/2002	Spinazzola et al.	
6,557,357	B2	5/2003	Spinazzola et al.	
6,557,624	B1	5/2003	Stahl et al.	
6,574,104	B2	6/2003	Patel et al.	
6,574,970	B2	6/2003	Spinazzola et al.	
6,616,524	B2 *	9/2003	Storck et al.	454/184
2004/0100770	A1 *	5/2004	Chu et al.	361/698

* cited by examiner

Primary Examiner—Marc Norman

(57) **ABSTRACT**

In a cooling system for cooling racks in a data center, cooling fluid is circulated in the data center by a cooling device having a fan. In addition, this system includes a plenum having a plurality of returns and an outlet. The outlet of the plenum is in fluid communication with the fan and the plurality of returns are configured for removing the cooling fluid from the data center. Furthermore, the returns and are operable to vary a characteristic of the removal of the cooling fluid.

29 Claims, 5 Drawing Sheets

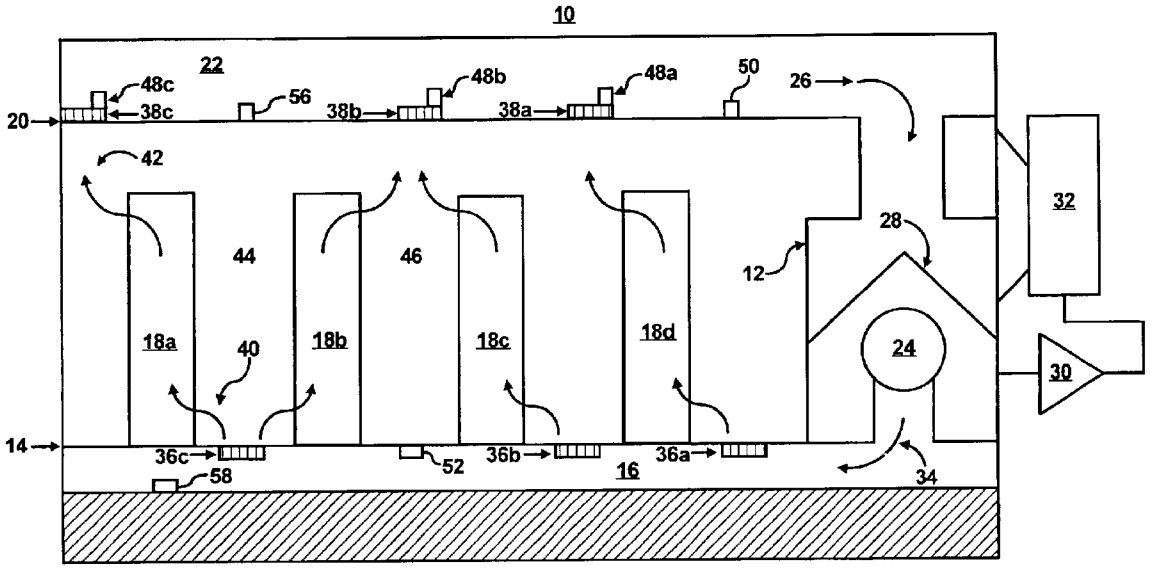

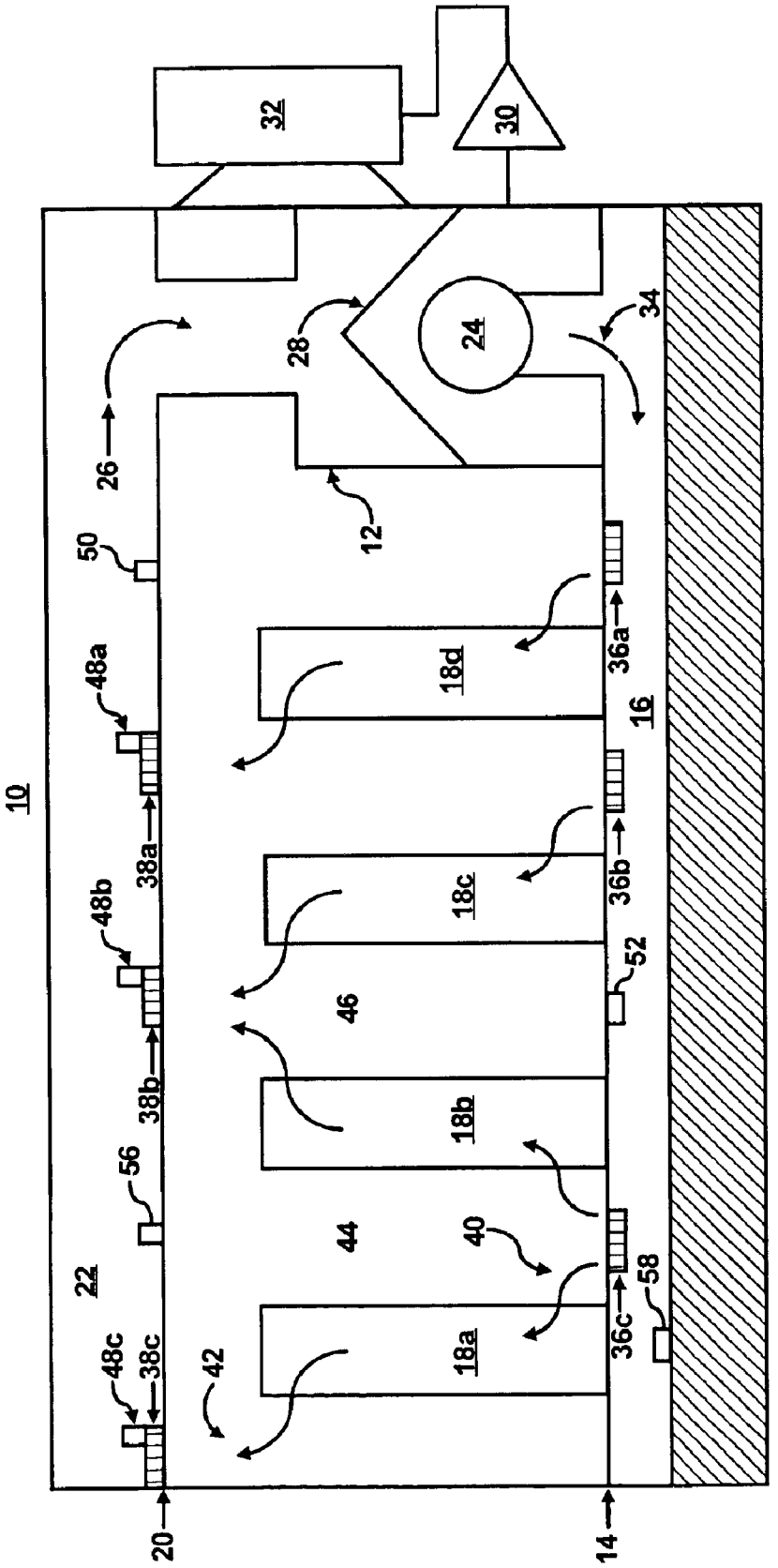
10
12
14
16
18a
18b
18c
18d
20
22
24
26
28
30
32
34
36a
36b
36c
38a
38b
38c
40
42
44
46
48a
48b
48c
50
52
56
58

FIG. 1

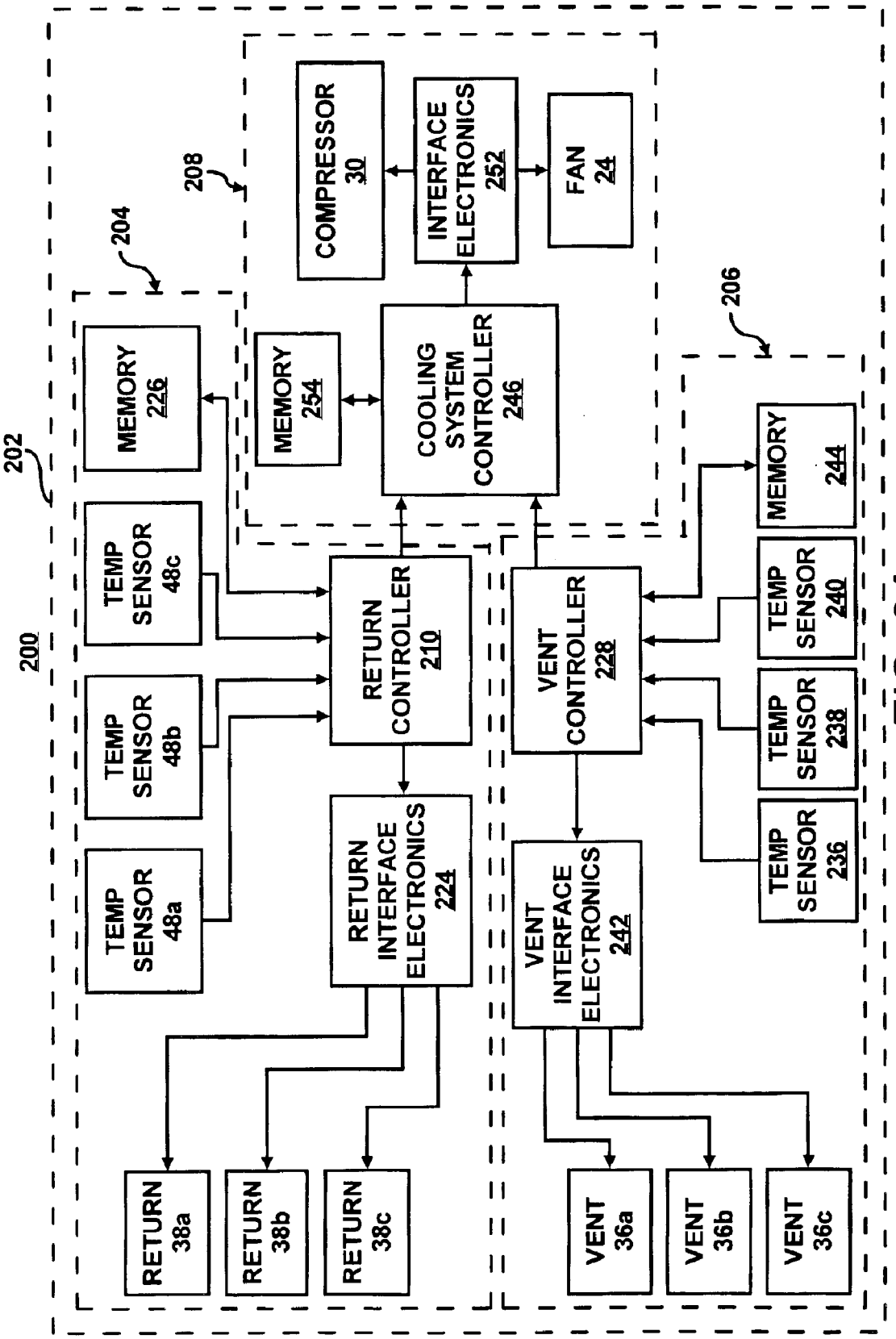
200
202
204
206
208
MEMORY 226
TEMP SENSOR 48a
TEMP SENSOR 48b
TEMP SENSOR 48c
RETURN CONTROLLER 210
RETURN INTERFACE ELECTRONICS 224
RETURN 38a
RETURN 38b
RETURN 38c
MEMORY 254
COOLING SYSTEM CONTROLLER 246
COMPRESSOR 30
INTERFACE ELECTRONICS 252
FAN 24
VENT CONTROLLER 228
VENT INTERFACE ELECTRONICS 242
MEMORY 244
TEMP SENSOR 240
TEMP SENSOR 238
TEMP SENSOR 236
VENT 36a
VENT 36b
VENT 36c

FIG. 2A

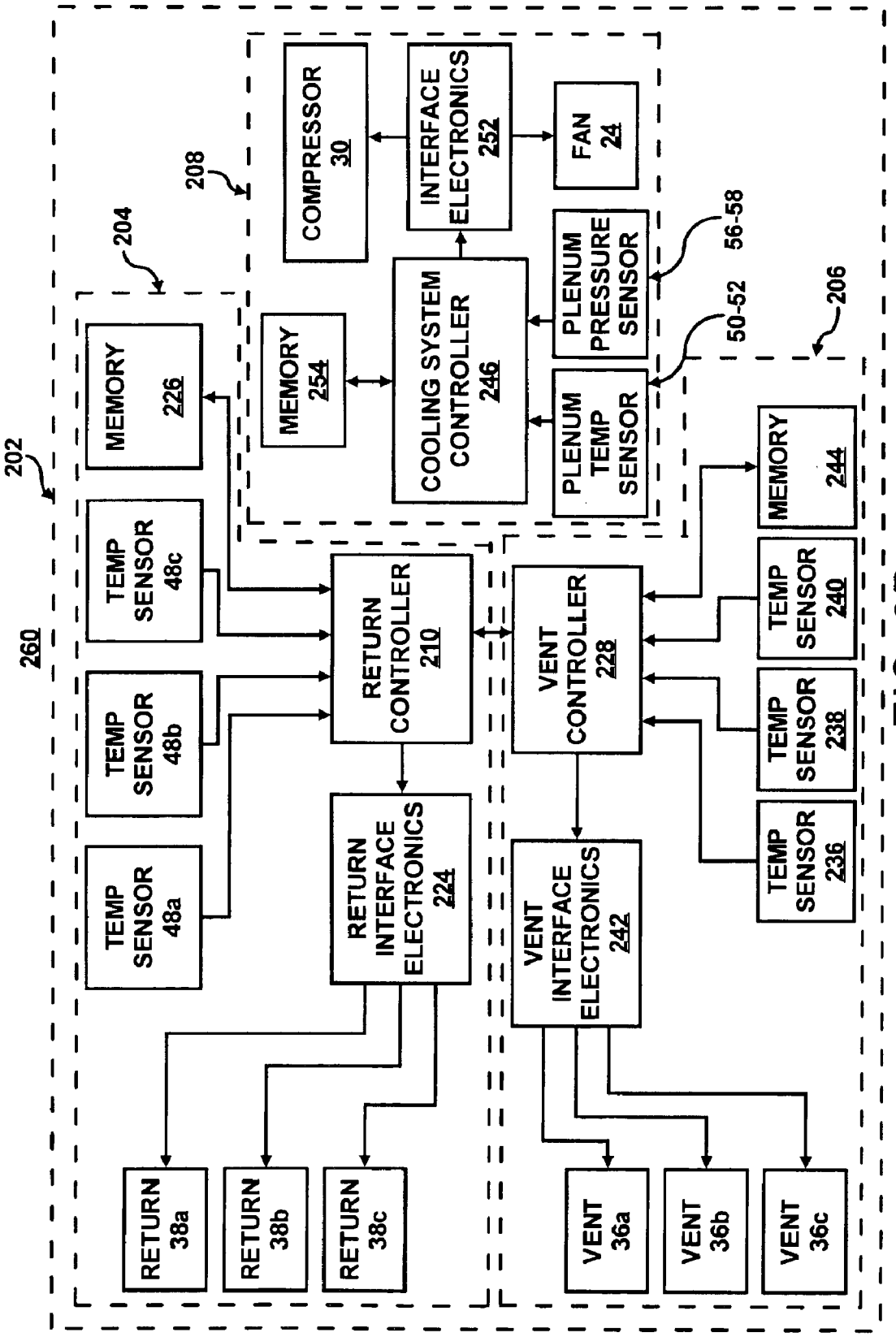
202
204
208
206
260
COMPRESSOR 30
INTERFACE ELECTRONICS 252
FAN 24
MEMORY 226
MEMORY 254
COOLING SYSTEM CONTROLLER 246
PLENUM PRESSURE SENSOR
PLENUM TEMP SENSOR
56-58
50-52
MEMORY 244
TEMP SENSOR 48c
TEMP SENSOR 48b
TEMP SENSOR 48a
RETURN CONTROLLER 210
VENT CONTROLLER 228
TEMP SENSOR 240
TEMP SENSOR 238
TEMP SENSOR 236
RETURN INTERFACE ELECTRONICS 224
VENT INTERFACE ELECTRONICS 242
RETURN 38a
RETURN 38b
RETURN 38c
VENT 36a
VENT 36b
VENT 36c

FIG. 2B

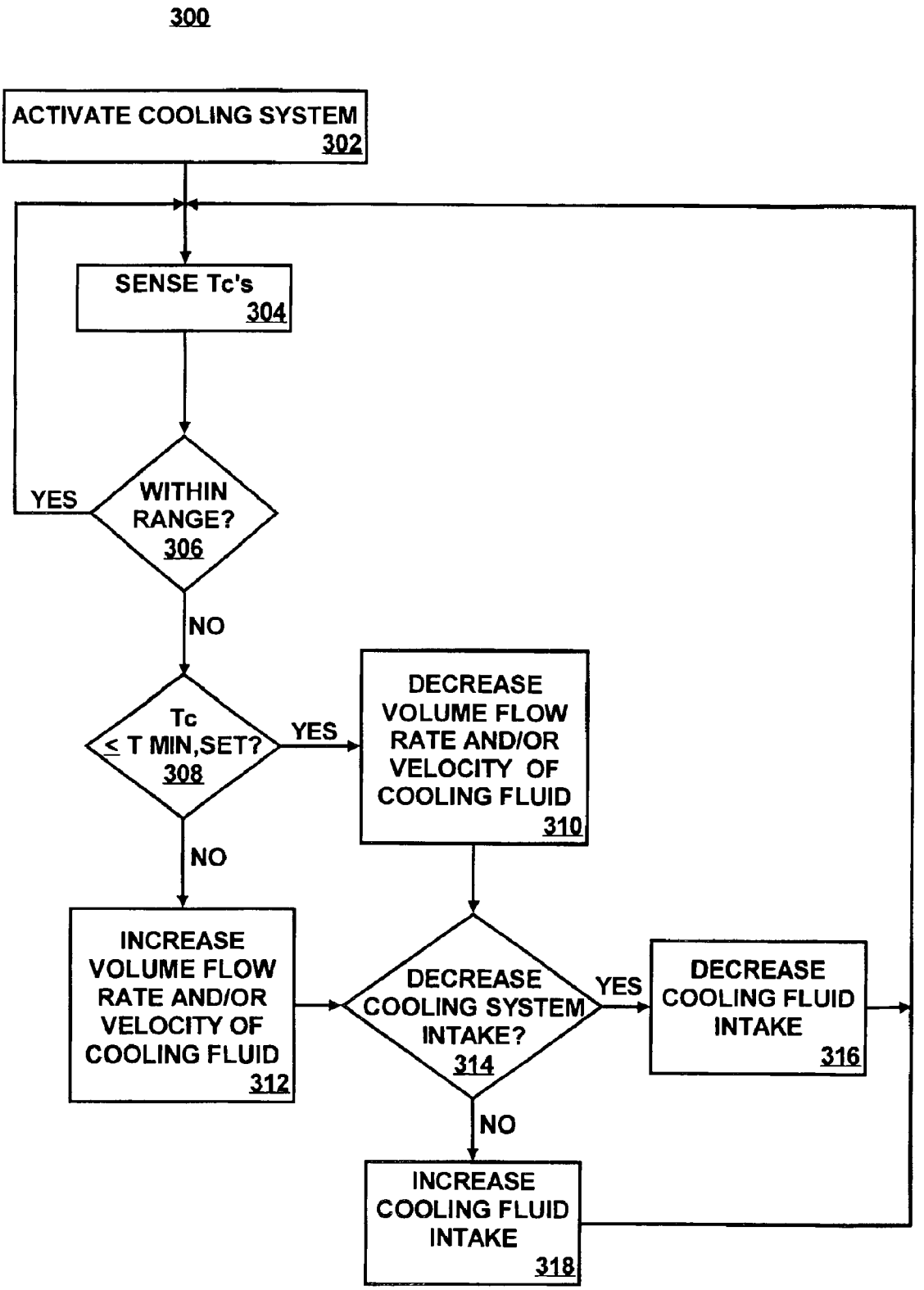
300
ACTIVATE COOLING SYSTEM
302
SENSE Tc's
304
WITHIN RANGE?
306
YES
NO
Tc ≤ T MIN,SET?
308
YES
NO
DECREASE VOLUME FLOW RATE AND/OR VELOCITY OF COOLING FLUID
310
INCREASE VOLUME FLOW RATE AND/OR VELOCITY OF COOLING FLUID
312
DECREASE COOLING SYSTEM INTAKE?
314
YES
NO
DECREASE COOLING FLUID INTAKE
316
INCREASE COOLING FLUID INTAKE
318

FIG. 3A

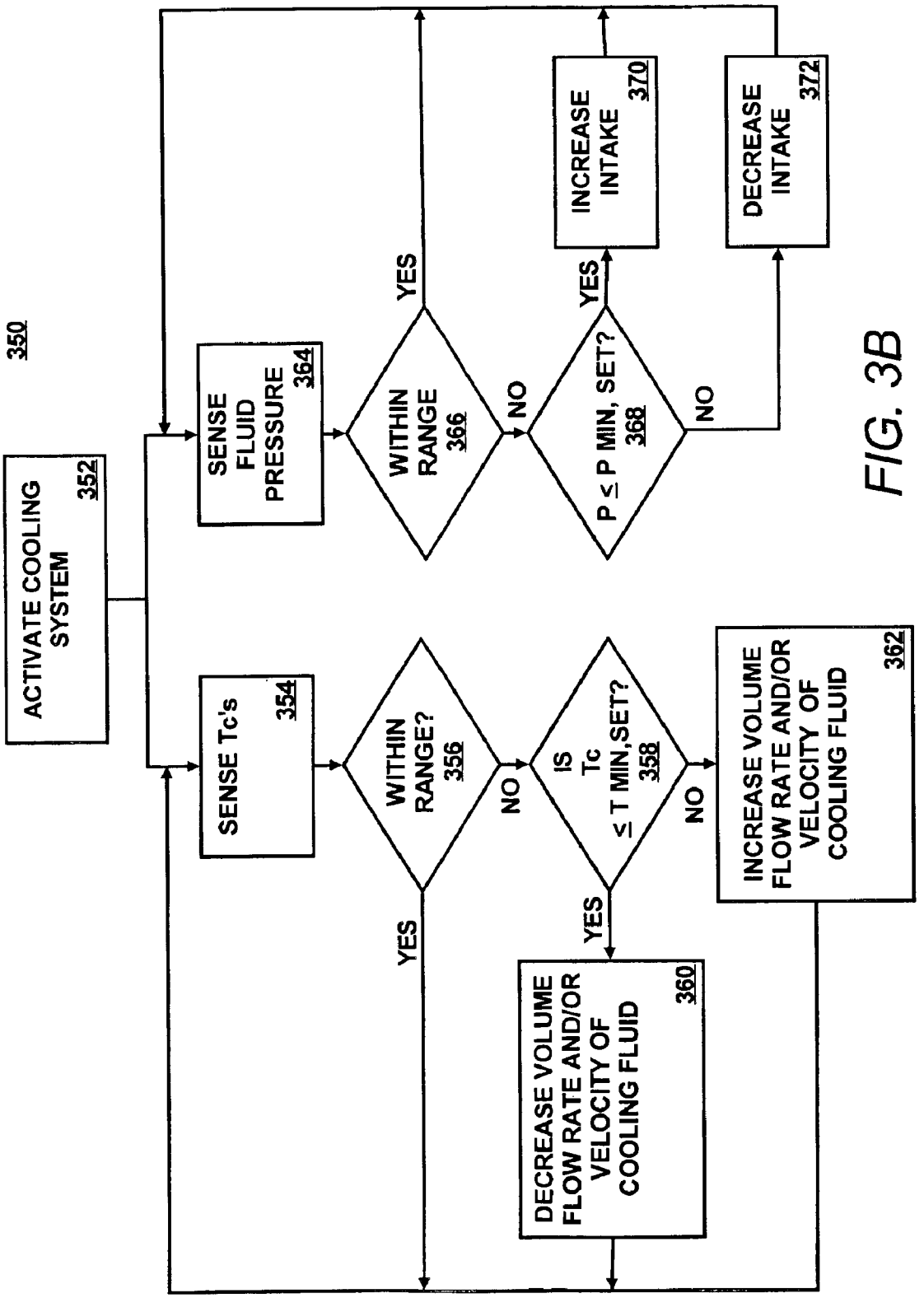
350
ACTIVATE COOLING SYSTEM
352
SENSE FLUID PRESSURE
364
WITHIN RANGE
366
YES
NO
P ≤ P MIN, SET?
368
YES
NO
INCREASE INTAKE
370
DECREASE INTAKE
372
SENSE Tc's
354
WITHIN RANGE?
356
YES
NO
IS Tc ≤ T MIN,SET?
358
YES
NO
DECREASE VOLUME FLOW RATE AND/OR VELOCITY OF COOLING FLUID
360
INCREASE VOLUME FLOW RATE AND/OR VELOCITY OF COOLING FLUID
362

FIG. 3B

COOLING OF DATA CENTERS

This is a divisional of application Ser. No. 10/262,879 filed on Oct. 3, 2002 now U.S. Pat. No. 6,775,997 which is hereby incorporated by reference herein.

BACKGROUND

A data center may be defined as a location, e.g., room, that houses numerous printed circuit (PC) board electronic systems arranged in a number of racks. A standard rack may be defined as an Electronics Industry Association (EIA) enclosure, 78 in. (2 meters) wide, 24 in. (0.61 meter) wide and 30 in. (0.76 meter) deep. Standard racks may be configured to house a number of PC boards, e.g., about forty (40) boards, with future configurations of racks being designed to accommodate up to eighty (80) boards. The PC boards typically include a number of components, e.g., processors, micro-controllers, high speed video cards, memories, semiconductor devices, and the like, that dissipate relatively significant amounts of heat during the operation of the respective components. For example, a typical PC board comprising multiple microprocessors may dissipate approximately 250 W of power. Thus, a rack containing forty (40) PC boards of this type may dissipate approximately 10 KW of power.

The power required to remove the heat dissipated by the components in the racks is generally equal to about 10 percent of the power needed to operate the components. However, the power required to remove the heat dissipated by a plurality of racks in a data center is generally equal to about 50 percent of the power needed to operate the components in the racks. The disparity in the amount of power required to dissipate the various heat loads between racks and data centers stems from, for example, the additional thermodynamic work needed in the data center to cool the air. In one respect, racks are typically cooled with fans that operate to move cooling fluid, e.g., air, across the heat dissipating components; whereas, data centers often implement reverse power cycles to cool heated return air. The additional work required to achieve the temperature reduction, in addition to the work associated with moving the cooling fluid in the data center and the condenser, often add up to the 50 percent power requirement. As such, the cooling of data centers presents problems in addition to those faced with the cooling of racks.

Conventional data centers are typically cooled by operation of one or more air conditioning units. The compressors of the air conditioning units typically require a minimum of about thirty (30) percent of the required cooling capacity to sufficiently cool the data centers. The other components, e.g., condensers, air movers (fans), etc., typically require an additional twenty (20) percent of the required cooling capacity. As an example, a high density data center with 100 racks, each rack having a maximum power dissipation of 10 KW, generally requires 1 MW of cooling capacity. Air conditioning units with a capacity of 1 MW of heat removal generally requires a minimum of 300 KW input compressor power in addition to the power needed to drive the air moving devices, e.g., fans, blowers, etc. Conventional data center air conditioning units do not vary their cooling fluid output based on the distributed needs of the data center. Instead, these air conditioning units generally operate at or near a maximum compressor power even when the heat load is reduced inside the data center.

The substantially continuous operation of the air conditioning units is generally designed to operate according to a worst-case scenario. That is, cooling fluid is supplied to the components at around 100 percent of the estimated cooling requirement. In this respect, conventional cooling systems often attempt to cool components that may not be operating at a level which may cause their temperatures to exceed a predetermined temperature range. In addition, conventional return systems remove air from the data centers in an indiscriminate manner. That is, conventional return systems may remove relatively cool air from data centers and/or may not efficiently remove relatively warm air from data centers. Consequently, conventional cooling systems often incur greater amounts of operating expenses than may be necessary to sufficiently cool the heat generating components contained in the racks of data centers.

SUMMARY

In accordance with an embodiment, the invention pertains to a cooling system for cooling racks in a data center. In this system, cooling fluid is circulated in the data center by a cooling device having a fan. In addition, this system includes a plenum having a plurality of returns and an outlet. The outlet of the plenum is in fluid communication with the fan and the plurality of returns are configured to remove the cooling fluid from the data center. Furthermore, the returns and are operable to vary a characteristic of the removal of the cooling fluid.

BRIEF DESCRIPTION OF THE DRAWINGS

Embodiments of the invention are illustrated by way of example and not limitation in the accompanying figures in which like numeral references refer to like elements, and wherein:

FIG. **1** shows a simplified schematic illustration of a data center containing a cooling system in accordance with an embodiment of the invention;

FIGS. **2**A and **2**B illustrate block diagrams of respective control schemes for cooling systems according to various embodiments of the invention; and

FIGS. **3**A and **3**B show flow diagrams of a first and second manner in which embodiments of the invention may be practiced.

DETAILED DESCRIPTION

For simplicity and illustrative purposes, the principles of the invention are described by referring mainly to an embodiment thereof. In the following description, numerous specific details are set forth in order to provide a thorough understanding of the invention. It will be apparent however, to one of ordinary skill in the art, that the invention may be practiced without limitation to these specific details. In other instances, well known methods and structures have not been described in detail so as not to unnecessarily obscure the invention.

According to an embodiment of the invention, a cooling system is configured to adjust cooling fluid (e.g., air, other gasses, liquid, etc.) flow to and/or from various racks located throughout a data center, e.g., a location that houses numerous printed circuit (PC) board electronic systems arranged in a number of racks, based upon the detected or anticipated temperatures at various locations throughout the data center. In one respect, by substantially increasing the cooling fluid flow to and/or from those racks dissipating greater amounts of heat and by substantially decreasing the cooling fluid flow to and/or from those racks dissipating lesser amounts of heat, the amount of energy required to operate the cooling

system may be relatively reduced. Specifically, by modifying the return flow rate of cooling fluid, relatively hot fluid may be removed from the data center while relatively cooler fluid may be allowed to remain. Thus, instead of operating the devices, e.g., compressors, fans, etc., of the cooling system at substantially 100 percent of the anticipated heat dissipation from the racks, those devices may be operated according to the actual cooling needs. In addition, the racks may be positioned throughout the data center according to their anticipated heat loads to thereby enable computer room air conditioning (CRAC) units located at various positions throughout the data center to operate in a more efficient manner. In another respect, the positioning of the racks may be determined through implementation of modeling and metrology of the cooling fluid flow throughout the data center. In addition, the numerical modeling may be implemented to determine the volume flow rate and velocity of the cooling fluid flow through each of the vents. Furthermore, the numerical modeling may be implemented to determine the volume flow rate and velocity of the return cooling fluid flow through each of the return vents.

FIG. **1** shows a simplified schematic illustration of a data center **10** containing a cooling system **12**. The data center **10**, according to this embodiment of the invention, includes a raised floor **14**. A plurality of wires and communication lines (not shown) may be located in a space **16** beneath the raised floor **14**. In addition, the space **16** may function as a plenum to deliver cooling fluid (e.g., air) from the cooling system **12** to a plurality of racks **18***a*–**18***d*. The data center **10** may further include a lowered ceiling **20**. In a manner similar to the raised floor **14**, the lowered ceiling **20** may include a space **22** in which a plurality of wires and communication lines (not shown) may be located. In addition, the space **22** may function as a plenum to return air to the cooling system **12**. Although the data center **10** is illustrated in FIG. **1** as containing four racks **18***a*–**18***d* and a cooling system **12**, it should be understood that the data center may include any number of racks, e.g., 100 racks, and cooling systems, e.g., four or more. The illustration of four racks is for illustrative and simplicity of description purposes only and is not intended to limit the invention in any respect.

The racks **18***a*–**18***d* generally house a plurality of components (not shown), e.g., processors, micro-controllers, high speed video cards, memories, semi-conductor devices, and the like. The components may be elements of a plurality of subsystems (not shown), e.g., computers, servers, etc. The subsystems and the components may be implemented to perform various electronic, e.g., computing, switching, routing, displaying, and the like, functions. In the performance of these electronic functions, the components, and therefore the subsystems, generally dissipate relatively large amounts of heat. Because racks **18***a*–**18***d* have been generally known to include upwards of forty (40) or more subsystems, they may transfer substantially large amounts of heat to the cooling fluid to maintain the subsystems and the components generally within a predetermined operating temperature range.

As this air is heated in the vicinity of the racks **18***a*–**18***d*, it may expand and create a localized area of relatively high pressure. This may inhibit movement of relatively cool incoming air. To compensate for this phenomenon, conventional cooling systems may cool surrounding areas below the predetermined operating range. However, this may be inefficient because relatively more energy may be utilized to cool these surrounding areas below the predetermined operating range than would otherwise be required in a system with sufficient air movement. Furthermore, if the relatively hot air is drawn into the racks **18***a*–**18***d*, it may not have sufficient cooling potential to maintain the subsystems and the components generally within the predetermined operating temperature range. Therefore, according to one aspect of an embodiment of the invention, by substantially controlling the amount of heated cooling fluid (e.g., heated air, return air, etc.) removed from the general vicinity of the components and the subsystems located in the racks **18***a*–**18***d* based upon their respective heat loads, the power consumed by the cooling system **12** to maintain the components at predetermined operating temperatures may also be controlled.

The cooling system **12** generally includes a fan **24** for supplying cooling fluid (e.g., air) into the space **16** (e.g., plenum) and/or drawing air from the space **22** (e.g., plenum). Air, heated in the data center **10** is supplied to the fan **24** from the space **22** as indicated by an arrow **26**. In operation, the heated air (e.g., return air) enters into the cooling system **12** as indicated by the arrow **26** and is cooled by operation of a cooling coil **28**, a compressor **30**, and a condenser **32**, in any reasonably suitable manner generally known to those of ordinary skill in the art. In terms of cooling system efficiency, it is generally desirable that the return air is composed of the relatively warmest portion of air in the data center **10**.

Although reference is made throughout the present disclosure of the use of a fan **24** to draw heated air from the space **22**, it should be understood that any other reasonably suitable manner of air removal may be implemented without departing from the scope of the invention. By way of example, a separate fan (not shown) may be provided to draw air from the space **22**. Alternatively, the intakes of the space **22** may be provided with fans (not shown) such that each intake may draw a substantially independent amount of air from the data center **10**.

In addition, based upon the cooling fluid needed by the heat loads in the racks **18***a*–**18***d*, the cooling system **12** may be operated at various levels. For example, the capacity (e.g., the amount of work exerted on the refrigerant) of the compressor **30** and the speed of the fan **24** may both be modified to thereby control the temperature and the amount of cooling fluid flow delivered to the racks **18***a*–**18***d*. In this respect, the compressor **30** is a variable capacity compressor and the fan **24** is a variable speed fan. The compressor **30** may thus be controlled to either increase or decrease the mass flow rate of a refrigerant therethrough. Because the specific type of compressor **30** and fan **24** to be employed with the embodiments of the invention may vary according to individual needs, the invention is not limited to any specific type of compressor or fan. Instead, any reasonably suitable type of compressor **30** and fan **24** that are capable of accomplishing certain aspects of the invention may be employed with the embodiments of the invention. The choice of compressor **30** and fan **24** may depend upon a plurality of factors, e.g., cooling requirements, costs, operating expenses, etc.

The cooling fluid generally flows from the fan **24** and into the space **16** (e.g., plenum) as indicated by the arrow **34**. The cooling fluid flows out of the raised floor **14** through a plurality of dynamically controllable vents **36***a*–**36***c* that generally operate to control the velocity and the volume flow rate of the cooling fluid therethrough. A more detailed description of the above-described embodiment may be found in co-pending U.S. application Ser. No. 09/970,707, filed Oct. 5, 2001, which is assigned to the assignee of the present invention and is incorporated by reference herein in its entirety.

The cooling fluid may absorb dissipated heat as it flows through the racks **18***a*–**18***d*. This heated cooling fluid may flow into the lowered ceiling through a plurality of dynamically controllable returns **38***a*–**38***c* that generally operate to control the velocity, direction, and the volume flow rate of the heated cooling fluid therethrough. In one respect, the velocity and the volume flow rate of the cooling fluid may be regulated by varying the shape and/or opening size of the vents **36***a*–**36***c* and/or the returns **38***a*–**38***c*. In another respect, the direction from which the cooling fluid is received may also be varied. For example, louvers within the returns **38***a*–**38***c* (not specifically shown in FIG. **1**) may be modified to vary the intake of the heated cooling fluid therethrough. In yet another respect, fans within the returns **38***a*–**38***c* (not specifically shown in FIG. **1**) may be configured to vary the volume flow rate and/or velocity of the heated cooling fluid therethrough. Thus, according to this embodiment of the invention, the racks **18***a*–**18***d* may receive substantially individualized and localized amounts of cooling fluid according to their heat loads. In addition, the removal of the heated cooling fluid in the vicinity of the racks **18***a*–**18***d* may be substantially individualized according to the localized heat load.

The arrows **40** indicate the general direction of travel of the cooling fluid and the dashed arrows **42** indicate the general direction of travel of fluid heated by the heat dissipating components located within the racks **18***a*–**18***d*. As may be seen in FIG. **1**, the areas between the racks **18***a*–**18***d* may comprise either cool aisles **44** or hot aisles **46**, or a combination thereof. The cool aisles **44** are those aisles that include the vents **36***a*–**36***c* and thus receive cooling fluid for delivery to the racks **18***a*–**18***d*. The hot aisles **46** are those aisles that receive air heated by the heat dissipating components in the racks **18***a*–**18***d*. The returns **38***a*–**38***c* may be positioned to remove air from the hot aisles **46**. In this regard, the returns **38***a*–**38***c* may remove relatively more heated fluid from the hot aisles **46**. Thus, reducing the lifetime of relatively hot air particles within the data center **10** and the likelihood of these hot air particles being drawn back into the racks **18***a*–**18***d*.

In addition, various sections of each of the racks **18***a*–**18***d* may also receive substantially individualized amounts of cooling fluid. By way of example, if the bottom halves of the racks **18***a* and **18***b* are operating at maximum power, thereby dissipating a maximum level of heat load, and the upper halves are operating at little or no power, the vent **36***c*, the return **38***c*, and/or the return **38***b* may be configured to enable cooling fluid flow therethrough to have a relatively high volume flow rate with a relatively low velocity. In this manner, the cooling fluid may operate to generally supply greater cooling to the lower halves of the racks **18***a* and **18***b*, whereas the upper halves receive relatively lesser amounts of cooling fluid. In addition, if the upper halves of the racks **18***c* and **18***d* are operating at approximately 50 percent of their maximum power, and the lower halves are operating at little or no power, the vent **34***b* and/or the return **38***a* may be configured to enable cooling fluid flow therethrough to have a relatively low volume flow rate with a relatively high velocity. In this manner, the cooling fluid flow may have sufficient momentum to adequately reach and cool the upper halves of the racks **18***c* and **18***d*.

Moreover, as the cooling requirements vary according to the heat loads in the racks **18***a*–**18***d*, and the subsequent variations in the volume flow rate of the cooling fluid, the cooling system **12** may also vary the amount of cooling fluid supplied to the racks. As an example, if the heat load in the racks **18***a*–**18***d* generally increases, the cooling system **12** may operate to increase the supply of cooling fluid and/or the return of heated fluid. Alternatively, if the heat load in the racks **18***a*–**18***d* generally decreases, the cooling system **12** may operate to decrease the supply of cooling fluid and/or the return of heated fluid. The vents **36***a*–**36***c* thus generally provide localized control of the cooling fluid flow to the racks **18***a*–**18***d* and the returns **38***a*–**38***c* generally provide localized control of the heated fluid flow back to the cooling system **12**. In this regard, the cooling system **12** generally provides global control of the cooling fluid flow and/or the heated fluid flow. In one respect, therefore, the amount of energy consumed by the cooling system **12** in maintaining the racks **18***a*–**18***d* at a predetermined temperature range may be substantially reduced in comparison with conventional data center cooling systems.

According to an embodiment of the invention, the flow of heated fluid through the returns **38***a*–**38***c* may be modified in response to the temperature of the fluid at and/or near each of the returns **38***a*–**38***c*. In this respect, each of the returns **38***a*–**38***c* may include a respective temperature sensor **48***a*–**48***c*. For example, in response to the temperature sensor **48***a* detecting a high temperature, relative to a predetermined temperature and/or the other temperature sensors **48***b*–**48***c*, the return **38***a* may be modified to increase the flow of heated fluid therethrough.

In addition, the capacity of the compressor **30** may vary according to changes in the temperature of the returned heated fluid. As such, the temperature sensors **48***a*–**48***c* may relay temperature measurements to the cooling system **12**. The temperature sensors **48***a*–**48***c* may comprise any reasonably suitable temperature sensor known to those skilled in the art. Therefore, the compressor **30** may be operated to generally maintain the temperature of the heated fluid within each of the returns **38***a*–**38***c* at a substantially constant level. In addition, the capacity of the compressor **30** may also vary according to detected and/or anticipated changes in heat loads generated in the racks **18***a*–**18***d*, the flow rates of the vents **36***a*–**36***c* and/or the returns **38***a*–**38***c*, and/or various sensed pressures within the data center **10**. As an example, the compressor **30** capacity may be increased as the heat loads generated in the racks **18***a*–**18***d* increase. In this regard, the power required to operate the compressor **30** may be substantially optimized, thereby reducing the total power required to operate the cooling system **12**.

According to an embodiment of the invention, the flow of heated fluid through the returns **38***a*–**38***c* may be modified in response to the flow of the cooling fluid supply through the vents **36***a*–**36***c*. For example, in response to the vent **36***a* being modified to increase the flow of the cooling fluid therethrough, the return **38***a* may, in a similar manner, be modified to increase the flow of heated fluid. By way of example, the flow rates of the cooling fluid across corresponding vents **36***a*–**36***c* and returns **38***a*–**38***c* may be measured (e.g., either directly or by measuring pressure drop and using a suitable correlation) and synchronized. The flow rates of the vents **36***a*–**36***c* may be determined by measuring temperature in the room, for instance, and the flow rates of the returns **38***a*–**38***c* can be set to equal the flow rates of the vents **36***a*–**36***c*. If the flow rates are relatively matched, or some correlation between them utilized, the recirculation of hot air in the room may be reduced as well as mixing of the hot air and the cooler cooling fluid, to thereby improve system efficiency. In this respect, the returns **38***a*–**38***c* may control the flow of return air based on the operation of the vents **36***a*–**36***c*. Thus, only that amount of energy required to substantially cool the components contained in the racks **18***a*–**18***d* may be expended, which may correlate to a substantial energy savings over known cooling systems.

The capacity of the compressor **30** may vary according to changes in the temperature of the return air located in the space **22**. As such, a plenum temperature sensor **50** may be located within the space **22** to relay temperature measurements to the cooling system **12**. The plenum temperature sensor **50** may comprise any reasonably suitable temperature sensor known to those skilled in the art. Therefore, the compressor **30** may be operated to generally maintain the temperature of the return air within the space **22** at a substantially constant level. Similarly, it is within the scope of the invention that the capacity of the compressor **30** may vary according to changes in the temperature of the air located in the space **16**. As such, a plenum temperature sensor **52** may be located within the space **16** to relay temperature measurements to the cooling system **12**. In addition, the capacity of the compressor **30** may also vary according to detected and/or anticipated changes in heat loads generated in the racks **18***a*–**18***d*. As an example, the compressor **30** capacity may be increased as the heat loads generated in the racks **18***a*–**18***d* increase. In this regard, the power required to operate the compressor **30** may be substantially optimized, thereby reducing the total power required to operate the cooling system **12**.

As discussed above, the fan **24** is a variable speed fan. In this regard, it is within the scope of the invention that the speed of the fan **24** be modifiable based on a variety of factors. For example, in an embodiment of the invention, a pressure sensor **56** may be configured to measure the pressure of the returning cooling fluid in the space **22** and relay these measurements to the cooling system **12**. In another embodiment, a pressure sensor **58** may be configured to measure the pressure of the cooling fluid in the space **16** and relay these measurements to the cooling system **12**. Based on the pressure measurements from the pressure sensor **56** and/or **58** the speed of the fan **24** may be varied. In this manner, the power required to operate the fan **24** may be substantially optimized, thereby reducing the total power required to operate the cooling system **12**.

In addition, the discussion above describes the inclusion of temperature and pressure sensors. However, it is within the scope of various embodiments of the invention that any reasonable type of sensor be included. In general, these sensors may be operable to sense or measure environmental conditions (e.g., temperature, pressure, humidity, wind speed, etc.) and relay data related to the sensed (or measured) environmental condition to the cooling system **12**. Specific environmental conditions which these types of sensors may be utilized to detect include, but are not limited to: temperature, pressure, humidity, and fluid flow rate. These sensors may be positioned at various locations within the data center **10**. For example, sensors may be placed in the racks, vents, returns, plenums, or the like.

Referring to FIG. **2**A, there is illustrated a block diagram **200** of a control scheme for a cooling system **202** according to an embodiment of the invention. The following description of the block diagram **200** is one manner in which the cooling system **202** may be operated. In this respect, it is to be understood that the following description of the block diagram **200** is but one manner of a variety of different manners in which such a cooling system **202** may be operated. According to this embodiment of the invention, the cooling system **202** includes a return unit **204**, a vent unit **206**, and a heat exchange unit **208**.

The return unit includes a return controller **210** generally configured to control the operation of returns **38***a*–**38***c*. In this regard, the return controller **210** may comprise a microprocessor, a micro-controller, an application specific integrated circuit (ASIC), and the like. In an embodiment of the invention, the manner in which the return controller **210** operates the returns **38***a*–**38***c*, i.e., the flow of return air therethrough, may be predicated upon the detected or anticipated temperatures of the racks **18***a*–**18***d* or portions thereof. For example, with regard to detected temperatures, a plurality of temperature sensors **48***a*–**48***c*, e.g., thermocouples, may be positioned at various positions around the subsystems and/or the racks **18***a*–**18***d*. Each of the temperature sensors **48***a*–**48***c* may correspond to a respective one of the returns **38***a*–**38***c*. By way of example, one temperature sensor **48***a* may affect the return flow of cooling fluid flow through one return **38***a*. Alternatively, with regard to anticipated temperatures, anticipated cooling requirements for each of the racks **18***a*–**18***d* and/or various sections of the racks may be predicated upon an impending load on the racks **18***a*–**18***d* and/or sections of the racks. For example, the return controller **210** may be connected to another controller, e.g., a central controller for the subsystems, which anticipates the heat load the components and/or the subsystems will dissipate. This information may be relayed to the return controller **210** which may then manipulate the returns **38***a*–**38***c* according to the anticipated load.

In addition to and/or in another embodiment of the invention, the manner in which the return controller **210** operates the returns **38***a*–**38***c* may be predicated upon the detected (e.g., sensed, measured, etc.) or calculated flow rate of the vents **36***a*–**36***c* or portions thereof. For example, with regard to detected flow rates, a plurality of flow sensors (not shown), may be positioned in or near the vents **36***a*–**36***c*. Each of the flow sensors may correspond to a respective one of the returns **38***a*–**38***c* and in a manner similar to above, may affect the return flow of cooling fluid flow through one return **38***a*–**38***c*. Alternatively, the flow rate may be calculated by correlating another sensed environmental condition, such as pressure change across each vent **36***a*–**36***c*, with the flow rate. This information may be relayed to the return controller **210** which may then manipulate the returns **38***a*–**38***c* according to the calculated flow.

Although FIG. **2**A illustrates three temperature sensors **48***a*–**48***c* connected to the return controller **210**, it should be understood that the number of temperature sensors is not critical to the operation of the various embodiments of the invention. Instead, the cooling system **202** may include any reasonably suitable number of temperature sensors to thus measure the temperatures of any reasonably suitable number of racks **18***a*–**18***d* or portions thereof. The number of temperature sensors and the temperature measurements of the number of racks may be upgradable, e.g., scalable, to include any additional components and/or racks that may be included in the data center. In addition, the temperature sensors need not be stationary. In this regard, according to another embodiment of the invention, a mobile device (not shown) is implemented to gather or measure at least one local environmental condition (e.g., temperature, pressure, air flow, humidity, etc.) in the data center **10**. More particularly, the mobile device is configured to travel around the racks to determine the one or more environmental conditions at various locations throughout the data center. In addition, the device may be configured to detect the one or more environmental conditions at various heights throughout the data center. The information gathered by the mobile device may be transmitted to the cooling system **202**. As described hereinbelow, a controller within the cooling system **202** may vary the delivery and temperature of cooling fluid according to the one or more detected environmental conditions. In this respect, the energy necessary to cool the

racks and the components contained therein, may substantially be optimized.

A more detailed description of the above-described embodiment may be found in co-pending U.S. application Ser. No. 10/157,892, filed May 31, 2002, which is assigned to the assignee of the present invention and is incorporated by reference herein in its entirety.

If there is an actual detected change or an anticipated change in the temperature of the respective racks **18***a*–**18***d* and/or portions thereof, the return controller **210** generally operates to manipulate the corresponding return **38***a*–**38***c* to compensate, i.e., changes the volume flow rate, velocity, and other similar characteristics of the cooling fluid, for the change in temperature. In this respect, heated cooling fluid may be removed from the vicinity of each of the racks **18***a*–**18***d* and/or portions thereof substantially only as necessary to maintain the temperature of the portions of the racks within a predetermined temperature range. As will be seen from the discussion hereinbelow, by controlling the cooling fluid flow in this manner, the compressors **30** and fans **24** may be operated at substantially optimized levels, thereby decreasing the amount of energy and thus the operating costs required to operate these devices.

Return interface electronics **224** may be provided to act as an interface between the return controller **210** and the components, e.g., control the opening in the returns **38***a*–**38***c* and the return flow through the returns **38***a*–**38***c*.

The return controller **210** may also be interfaced with a return memory **226** configured to provide storage of a computer software that provides the functionality of the cooling system and may be executed by the return controller **210**. The memory **226** may also be configured to provide a storage for containing data/information pertaining to the manner in which each of the returns **38***a*–**38***c* may be manipulated in response to the detected and/or anticipated temperatures of the portions of the racks **18***a*–**18***d*. In keeping with the example cited hereinabove, the return controller **210** may operate the return **38***a* to increase the volume flow rate and decrease the velocity of the cooling fluid flowing therethrough in response to a detected increase in the heat load of a lower portion of a corresponding rack. The memory **226** may be implemented as a combination of volatile and non-volatile memory, such as dynamic random access memory (DRAM), EEPROM, flash memory, and the like.

The vent unit **206** may be configured to operate in a manner similar to the return unit **204**. In this regard, the vent unit **206** may include a vent controller **228**, vents **36***a*–**36***c*, temperature sensors **236**–**240**, vent interface electronics **242** and a memory **244**. With respect to the temperature sensors **236**–**240**, in an embodiment of the invention, these sensors may be the temperature sensors **48***a*–**48***c* configured to relay temperature measurements to both the return controller **210** and the vent controller **228**. In various other embodiments of the invention, the temperature sensors **236**–**240** may be distinct from the temperature sensors **48***a*–**48***c*. In these various other embodiments, the temperature sensors **236**–**240** may be placed in or around the racks **18***a*–**18***d* and/or the vents **36***a*–**36***c*.

The vent controller **228** and the return controller **210** may be configured to relay data/information pertaining to temperature measurements and/or the flow of cooling fluid to each other and/or to the heat exchange unit **208**. More specifically, the heat exchange unit **208** may include a cooling system controller **246** configured to communicate with the return controller **210** and/or the vent controller **228**. The cooling system controller **246** is generally configured to control the operation of the cooling system **12**, e.g., the compressor **30** and the fan **24**. In this regard, the controller **228** may comprise a microprocessor, a micro-controller, ASIC, and the like.

Interface electronics **252** may be provided to act as an interface between the cooling system controller **246** and the components for operating the compressor **30** and the fan **24**, e.g., the supply of voltage to vary the respective speeds of the compressor and the fan, direct control of the compressor and the fan, etc.

The cooling system controller **246** may also be interfaced with a memory **254** configured to provide storage of a computer software that provides the functionality of the cooling system **12**, e.g., compressor **30** and fan **24**, and may be executed by the cooling system controller **246**. The memory **254** may also be configured to provide a storage for containing data/information pertaining to the manner in which the compressor **30** and the fan **24** may be manipulated in response to variations in the return fluid flow through the returns **38***a*–**38***c* and/or fluid flow through the vents **36***a*–**36***c*. In keeping with the example cited hereinabove, the cooling system controller **246** may operate the compressor **30** and the fan **24** to increase/decrease the volume flow rate of the cooling fluid flow in response to various degrees of detected increases/decreases in the volume flow rate through the returns **38***a*–**38***c* and/or the vents **36***a*–**36***c*. More particularly, a look up table (not shown) may be stored in the memory **254**. By way of example, the look up table may include information pertaining to the level of compressor **30** speed and fan **24** output increase necessary for a detected increase in the volume flow rate. In this respect, the compressor **30** speed and the fan **24** output may be varied substantially incrementally in response to detected changes in the volume flow rate. The memory **254** may be implemented as a combination of volatile and non-volatile memory, such as dynamic random access memory (DRAM), EEPROM, flash memory, and the like.

Although FIG. **2**A illustrates a single return controller **210** configured to operate the returns **38***a*–**38***c*, it should be understood that a plurality of return controllers may be implemented to perform the functions of the return controller **210** without deviating from the scope and spirit of the invention.

In FIG. **2**B, there is illustrated a block diagram **260** of another control scheme for a cooling system **202** according to the invention. The elements illustrated in the block diagram **260** operate in substantially the same manner as those elements illustrated in the block diagram **200**. However, one difference lies in the substantially independent operability of the heat exchange unit **208** from the return unit **204** and/or the vent unit **206**. That is, operation of the cooling system controller **246** may not be directly related to the operation of the return controller **210** and/or the vent controller **228**. Because of the apparent similarities between the block diagrams **200** and **260**, only those elements that differ between the block diagrams will be described hereinbelow.

Pressure sensors **56**–**58** may be configured to measure the pressure within the space **16** and/or space **22** (e.g., plenums) as described hereinabove. The pressure measurements and/or any discernable changes in the pressure measurements obtained by the pressure sensor(s) **56**–**58** may be relayed to the cooling system controller **246**. In addition, at least one plenum temperature sensor **50**–**52** may be configured to measure the temperature of the fluid within the space **16**

and/or space **22**. The temperature measurements and/or any discernable changes in the temperature obtained by the plenum temperature sensor may also be relayed to the cooling system controller **246**.

The cooling system controller **246** may manipulate the capacity of the compressor **30** based upon the measured temperature of the fluid. That is, the temperature of the fluid within the space **16** and/or space **22** may be maintained at a substantially constant level by manipulation of the compressor. Further, the output of the fan **24** may be manipulated based upon the measured pressure of the fluid in the space **16** to vary the amount of cooling fluid supplied to space **16**, to thereby substantially maintain the pressure of the cooling fluid within the space **16** at a substantially uniform level. Similarly, in addition to or as an alternative to manipulating the fan **24** output in response to pressure measurements within the space **16**, these manipulations may be based upon pressure measurements within the space **22**. Thus, the cooling system controller **246** is operable to increase the speed of the compressor **30** and the fan **24** output, e.g., expend a greater amount of energy, substantially as the heat loads in the racks **18***a*–**18***d* requires such an increase. Consequently, the compressor **30** and the fan **24** are not operated at a substantially constant energy level and the amount of energy necessary is substantially lower than that of conventional cooling systems that typically operate at maximum energy levels.

The memory **254** may also be configured to store data/information pertaining to the control of the compressor **30** speed and the output of the fan **24** corresponding to the measured pressure with the space **16** and/or space **22**. For example, the cooling system controller **246** may increase the compressor **30** speed and fan **24** output by a relatively large amount in response to a relatively large decrease in the measured pressure. In this respect, the pressure within the space **16** and/or space **22** may be maintained at a substantially uniform level even when the pressures change by a relatively sharp amount.

FIG. **3**A shows a flow diagram **300** of a first manner in which an embodiment of the invention may be practiced. The following description of the flow diagram **300** is made with reference to the block diagram **200** illustrated in FIG. **2**A, and thus makes reference to the elements cited therein. It is to be understood that the steps illustrated in the flow diagram **300** may be contained as a utility, program, subprogram, in any desired computer accessible medium. In addition, the flow diagram **300** may be embodied by a computer program, which can exist in a variety of forms both active and inactive. For example, they can exist as software program(s) comprised of program instructions in source code, object code, executable code or other formats. Any of the above can be embodied on a computer readable medium, which include storage devices and signals, in compressed or uncompressed form.

Examples of computer readable storage devices include conventional computer system RAM (random access memory), ROM (read only memory), EPROM (erasable, programmable ROM), EEPROM (electrically erasable, programmable ROM), and magnetic or optical disks or tapes. Examples of computer readable signals, whether modulated using a carrier or not, are signals that a computer system hosting or running the computer program can be configured to access, including signals downloaded through the Internet or other networks. Concrete examples of the foregoing include distribution of the programs on a CD ROM or via Internet download. In a sense, the Internet itself, as an abstract entity, is a computer readable medium. The same is true of computer networks in general. It is therefore to be understood that those functions enumerated below may be performed by any electronic device capable of executing the above-described functions.

In the flow diagram **300**, the cooling system **202** is activated and the vents **36***a*–**36***c* and the returns **38***a*–**38***c* are opened at step **302**. The temperature of a component (Tc) generally corresponds to the heat load of the heat dissipating components and therefore the subsystems contained in the racks **18***a*–**18***d*. Therefore, the Tc's may be based upon the temperatures of specific heat dissipating components and subsystems. In addition, the Tc's may be based upon the temperatures in the general vicinity of the racks and/or sections of the racks. Thus, those skilled in the art will understand that certain embodiments of the invention may be employed with the temperature sensors (e.g., **48***a*–**48***c*, **50**, **52**, **236**–**240**, etc.) located at various positions throughout the data center. Furthermore, it is within the scope of the invention that the temperature be sensed via mobile temperature sensors. Moreover, use of the term "rack" herein generally refers additionally to sections of the racks and thus may not necessarily refer to an entire rack. Thus, the use of the term "rack" throughout the disclosure is not meant to limit certain aspects to entire racks, but instead, is relied upon to simplify the description of certain embodiments of the invention.

At step **304**, the temperatures of the components (Tc's) are individually sensed by the temperature sensors. Alternatively, the Tc's may be anticipated in the manner described hereinabove with respect to FIG. **2**A. At step **306**, it is determined whether each of the measured temperatures are individually within a predetermined range of operating temperatures, e.g., between a maximum set point temperature (Tmax,set) and a minimum set point temperature (Tmin, set). The predetermined range of operating temperatures may be set according to a plurality of factors. These factors may include, for example, the operating temperatures set forth by the manufacturers of the subsystems and components located in the racks, through testing to determine the optimal operating temperatures, etc. In addition, the predetermined range of operating temperatures may vary from one subsystem to another on the basis that various subsystems generally may operate effectively at various temperatures.

The measured and/or anticipated temperatures for those racks determined to have heat loads that fall within the predetermined range of operating temperatures, are sensed again at step **304**. For those racks determined to have heat loads that do not fall within the predetermined temperature range, i.e., fall outside of Tmin,set and Tmax,set, it is determined whether the sensed temperature equals or falls below the Tmin,set at step **308**. In general, the range of temperatures Tmin,set and Tmax,set pertains to threshold temperatures to determine whether to increase or decrease the flow of cooling fluid delivered to the racks. The predetermined temperature range may be based upon a plurality of factors, for example, a threshold operating range of temperatures that may be determined through testing to substantially optimize the performance of the subsystems contained in the racks. Moreover, the predetermined temperature range may vary for each rack because various components generally may operate effectively at various temperatures and thus various threshold temperatures may be optimal.

If the Tc's of some of the racks are below or equal to the Tmin,set, the return controller **210** and/or the vent controller **228** may operate to decrease the volume flow rate and/or the

velocity of cooling fluid circulating about those racks at step **310**. The determination of whether to decrease either or both the volume flow rate and the velocity of the cooling fluid may be based upon the detected temperature of the racks. For example, if the subsystems on a bottom half of a rack are operating at 50 percent of maximum capacity, and the subsystems on an upper half of the rack are operating at or near zero capacity, the velocity of the cooling fluid may be reduced whereas the volume flow rate may remain substantially constant. This may occur, for example, because the cooling fluid need not travel a relatively long distance but may still need to supply the bottom half with a sufficient amount of cooling fluid.

If the Tc's of some of the racks exceed the Tmin,set (i.e., also exceed the Tmax,set), the return controller **210** and/or the vent controller **228** may operate to increase the volume flow rate and/or the velocity of cooling fluid circulating about those racks at step **312**. The determination of whether to increase either or both the volume flow rate and the velocity of the cooling fluid may be based upon the detected temperature of the racks. For example, if the subsystems on the top half of a rack are operating at 100 percent capacity, and the subsystems on a bottom half of the rack are operating at or near zero capacity, the velocity and the volume flow rate of the cooling fluid may both be increased. This may occur, for example, because the cooling fluid must travel a relatively long distance and supply the top half with a sufficient amount of cooling fluid.

According to an embodiment of the invention, the decrease in volume flow rate and/or velocity of the cooling fluid flow at step **310** and the increase in volume and/or velocity of the cooling fluid at step **312** may be accomplished by incrementally varying the cooling fluid flow through the returns **38***a*–**38***c* and/or the vents **36***a*–**36***c*. An example will be made for the instance where a return allows a certain amount of cooling fluid to flow therethrough, and the return is manipulated to increase the volume flow rate of the cooling fluid, and where the increase in fluid flow is insufficient to cause the Tc for that rack to fall within the predetermined range. In this instance, during a subsequent run through steps **204**–**210**, the return may be controlled to further increase the volume flow rate of the cooling fluid therethrough by an incremental amount. By repeating this process a number of times, the temperature of the rack may be substantially brought within the predetermined range. Similarly, manipulation of a vent in conjunction with the manipulation of the return may allow for greater control of the volume flow rate of fluid in and/or around a rack. In this manner, greater temperature control may be facilitated and greater energy savings may be realized.

At step **314**, the cooling system controller **246** may determine whether to decrease the cooling fluid intake, e.g., decrease the speed of the compressor **30** and/or the fan **24**. The determination of whether to decrease the cooling fluid intake may be made in response to the manipulations made to the returns **38***a*–**38***c* by the return controller **210**. For instance, if the total amount of decreases in the volume flow rates of the cooling fluid exceeds the total amount of increases in the volume flow rates flow of the cooling fluid, the cooling system controller **246** may operate to decrease the cooling fluid intake at step **316**. Alternatively, if the total amount of increases in the volume flow rates of the cooling fluid exceeds the total amount of decreases, the cooling system controller **246** may operate to increase the cooling system intake at step **318**.

Following steps **316** or **318**, or if the increases in the volume flow rates of the cooling fluid through the returns equals the decreases, for example, the Tc's are sensed again at step **304**. In addition, the steps following step **304** may be repeated for an indefinite period of time so long as the cooling system **202** is in operation.

It should be appreciated that the Tc's of some of the racks may fall below the Tmin,set, whereas the Tc's of other racks may exceed the Tmax,set. Thus, it should be appreciated that steps **310** and **312** may be respectively and substantially simultaneously performed on the various racks.

FIG. **3**B shows a flow diagram **350** of a second manner in which another embodiment of the invention may be practiced. The following description of the flow diagram **350** is made with reference to the block diagram **260** illustrated in FIG. **2**B, and thus makes reference to the elements cited therein. It is to be understood that the steps illustrated in the flow diagram **350** may be contained as a utility, program, subprogram, in any desired computer accessible medium. In addition, the flow diagram **350** may be embodied by a computer program, which can exist in a variety of forms both active and inactive. For example, they can exist as software program(s) comprised of program instructions in source code, object code, executable code or other formats. Any of the above can be embodied on a computer readable medium, which include storage devices and signals, in compressed or uncompressed form.

Examples of computer readable storage devices include conventional computer system RAM (random access memory), ROM (read only memory), EPROM (erasable, programmable ROM), EEPROM (electrically erasable, programmable ROM), and magnetic or optical disks or tapes. Examples of computer readable signals, whether modulated using a carrier or not, are signals that a computer system hosting or running the computer program can be configured to access, including signals downloaded through the Internet or other networks. Concrete examples of the foregoing include distribution of the programs on a CD ROM or via Internet download. In a sense, the Internet itself, as an abstract entity, is a computer readable medium. The same is true of computer networks in general. It is therefore to be understood that those functions enumerated below may be performed by any electronic device capable of executing the above-described functions.

In the flow diagram **350**, steps **352**–**362** respectively correspond to steps **302**–**312** recited hereinabove with respect to the flow diagram **300** illustrated in FIG. **2**A. Therefore, a detailed description of steps **352**–**362** will not be made herein. Instead, one of ordinary skill in the art will readily recognize that the description made hereinabove with respect to steps **302**–**312** has general applicability to steps **352**–**362** and may thus be used interchangeably.

Therefore, beginning at step **364**, the pressure of the cooling fluid returning to the cooling system **12** may be measured by a pressure sensor (e.g., the pressure sensor **56**, **58**, etc.). The measured pressure may be relayed to the cooling system controller **246**. The cooling system controller **246** may determine whether the measured pressure is within a predetermined pressure range, e.g., a predetermined minimum set point pressure (Pmin,set) and a predetermined maximum set point pressure (Pmax,set), at step **366**. The predetermined pressure range may be set according to a maximum desired volume flow rate and/or velocity of the cooling fluid to be drawn in through the returns **38***a*–**38***c*. In addition, the predetermined pressure range may be the substantial optimum operating pressure desired for controlling the flow of cooling fluid through the returns. If the measured pressure is within the predetermined pressure

range, the cooling system controller **246** returns to step **364**. Furthermore, it is within the scope of the invention that the cooling system controller **246** may alternate between temperature dependent control (e.g., steps **354** to **362**) and pressure dependent control (e.g., steps **364** to **372**). In this regard, following step **366**, the cooling system controller **246** may return to step **354** and following the step **356**, the cooling system controller **246** may return to step **364**.

If the measured pressure is not within the predetermined pressure range, it is determined whether an absolute value of the measured pressure (P) is below or equal to a minimum pressure set point (Pmin,set) at step **368**. The absolute value is utilized because the pressure within the return is likely to be a negative value as compared to the room pressure. In general, the predetermined pressure range pertains to the threshold pressures to determine whether to increase or decrease the movement of cooling fluid, e.g., in the space **16** and/or space **22**. The predetermined pressure range may be based upon a plurality of factors, for example, a threshold operating pressure or range of pressures that may be determined through testing to substantially optimize the performance of the cooling fluid intake through the returns **38***a*–**38***c*.

If the absolute value of the P is determined to be below or equal to the Pmin,set, the cooling system controller **246** may operate to increase the cooling fluid intake, e.g., by increasing the speed of the fan **24** at step **370**. Otherwise, if the absolute value of the P is determined to exceed the Pmin,set, and thereby exceed the Pmax,set, the cooling system controller **246** may operate to decrease the intake of the cooling fluid, e.g., by decreasing the compressor capacity and/or the fan speed, at step **372**.

Following steps **370** or **372**, the cooling system controller **246** returns to step **364**. In addition, the steps following step **364** may be repeated for an indefinite period of time so long as the cooling system **202** is in operation.

In accordance with an embodiment of the invention, the cooling requirements within a data center may be analyzed to substantially optimize the layout of the racks within the data center. In one respect, the substantial optimization of the rack layout in the data center may enable the cooling system of the data center to operate at generally lower energy and greater efficiency levels by virtue of the reduced workload placed on the components of the cooling systems, e.g., compressors, fans, etc. The cooling requirements within the data center may be analyzed by operation of any reasonably suitable commercially available computational fluid dynamics (CFD) tool, e.g., FLOVENT, a 3-D modeling software capable of predicting temperature variations based upon fluid flows. By virtue of the numerical modeling, various air conditioning units as well as the vents described hereinabove may be positioned throughout the data center to substantially control the manner in which the racks receive the cooling fluid. In addition, the air conditioning units may also be positioned to substantially maximize and optimize their performances, e.g., to prevent one or more of the air conditioning units from being overworked.

In determining the cooling fluid distribution requirement within the data center, each of the racks may be assigned a heat load which may correspond to a maximum heat load predicted for that rack, e.g., through anticipated power draw. For example, a rack containing 40 subsystems, e.g., computers, may have a maximum heat load of 10 KW and a rack containing 20 subsystems may have a maximum heat load of 5 KW. By implementing the CFD in this manner, for example in a data center containing 100 racks and four air conditioning units, racks having a potential for relatively larger heat loads may be relatively separately located throughout the data center. In one respect, therefore, the air conditioning units within the data center may be operated at substantially less than maximum power levels and the racks may receive sufficient amounts of cooling fluid. More specifically, the power required to operate the air conditioning units may be regulated to efficiently cool the fluid supplied to the racks by providing substantially only that amount of cooling fluid necessary to maintain the racks within normal operating temperatures.

According to another embodiment of the invention, a CFD tool may be implemented substantially continuously with the embodiments described hereinabove with respect to FIGS. **1**–**3**. More specifically, the CFD tool may be utilized to substantially continuously vary the operation of the cooling system to operate according to the heat loads generated in the racks. In this regard, the anticipated or actual heat loads (e.g., based upon the power draw of the components) on the racks may be inputted into the CFD tool, along with one or more of the following properties: velocity of the cooling fluid flowing through various sections of the data center and the distribution of temperature and pressure of the cooling fluid in the data center, to determine an optimal manner in which the air conditioning units may be operated as well as the flow of the cooling fluid through the vents to adequately cool the racks based upon an analysis of the data center layout and the heat loads. The CFD tool may be implemented to produce a numerical model of the data center to thus determine an optimized cooling distribution within the data center. A correlation of one or more of the following properties: velocity of the cooling fluid flowing through various sections of the data center, distribution of temperature and pressure of the cooling fluid in the data center, and the power draw into the racks, may be created based on the numerical modeling. The correlation may be used to infer thermal conditions throughout the data center when only a minimum number of sensors are available during operation of the cooling system. In addition, the correlation may substantially reduce the amount of time required for the CFD tool to perform the computing operations.

Thus, for example, with respect to FIG. **3A**, at step **312**, a numerical model may be created to analyze an optimal manner in which the volume flow and/or the velocity of the cooling fluid may be increased while considering the effects of fluid flow from other racks. In this respect, based upon the analysis, the return configured to remove cooling fluid from the vicinity of that rack and/or another return may be caused to vary the volume flow and/or velocity of the cooling fluid. In addition, at step **314**, the numerical model may be created to determine whether the cooling system intake should be decreased based upon the heat loads and the fluid flow throughout the data center. For example, if it is determined that a rack with an increasing heat load may receive a sufficient amount of cooling fluid by removing cooling fluid from a return generally away therefrom, the cooling system intake may not be increased. Thus, by implementation of the CFD tool to generally analyze the fluid flow characteristics and the temperatures of the racks, the amount of energy required to sufficiently cool the racks in the data center may be substantially optimized.

According to yet another embodiment of the invention, any reasonable control system may be employed to control the cooling system **202**. Specific examples of control systems employable to control the cooling system **202** include, but are not limited to: agent based control and market based

control. For example, in an agent based control system, each component of the cooling system **202** may be controlled by a software "agent" configured to interact and negotiate with the other agents to accomplish a collective goal of cooling the racks in a most efficient manner. In an example of a market based control system, each resource (e.g., cooling needs, fluid velocity, energy usage, etc.) may be assigned a unit value based on its relative supply and demand. The unit costs of these resources may be negotiated via a known market based software application and units of these resources may be traded within the system.

By virtue of certain aspects of the invention, one of ordinary skill in the art will readily recognize that the amount of energy, and thus the costs associated with cooling the racks located within a data center may be substantially reduced. In one respect, by operating the cooling system to circulate cooling fluid substantially only as needed by the racks, the cooling system may be operated at a relatively more efficient manner as compared to conventional cooling systems.

What has been described and illustrated herein is an embodiment of the invention along with some of its variations. The terms, descriptions and figures used herein are set forth by way of illustration only and are not meant as limitations. Those skilled in the art will recognize that many variations are possible within the spirit and scope of the invention, which is intended to be defined by the following claims—and their equivalents—in which all terms are meant in their broadest reasonable sense unless otherwise indicated.

What is claimed is:

1. A cooling system for cooling racks in a data center, said system comprising:

a cooling device for circulating cooling fluid in said data center, said cooling device including a fan;

a plenum having a plurality of returns and an outlet, wherein said outlet of said plenum is in fluid communication with said fan, wherein said plurality of returns are configured for removing said cooling fluid from said data center and are operable to vary a characteristic of said removal of cooling fluid through said returns; and

wherein the cooling device is configured to vary the cooling fluid circulation in said data center in response to a characteristic variance in the removal of cooling fluid through the returns.

2. The system according to claim **1**, wherein said characteristic of said cooling fluid comprises at least one of volume flow rate, velocity and direction of cooling fluid removal.

3. The system according to claim **1**, further comprising:

at least one return controller operable to control at least one of said returns, wherein said at least one return controller is configured to substantially independently control said returns to thereby substantially independently vary said characteristic of said cooling fluid removal.

4. The system according to claim **3**, further comprising:

a plurality of sensors configured to sense an environmental condition within said data center, said environmental condition including at least one of temperature, humidity, pressure, and cooling fluid flow rate, wherein said at least one return controller is configured to substantially independently control said returns in response to said measured environmental condition.

5. The system according to claim **3**, further comprising:

a cooling device controller for controlling the cooling device, wherein said cooling device controller is configured to communicate with the at least one return controller.

6. The system according to claim **1**, wherein said cooling device is configured to vary at least one of a volume flow rate and temperature of the cooling fluid delivered to the racks in response to the sensed at least one environmental condition.

7. The system according to claim **1**, wherein the plurality of returns includes fans configured to draw cooling fluid from the data center, wherein the fans are movable to vary a direction of cooling fluid removal.

8. The system according to claim **1**, wherein the plurality of returns are independent of the racks.

9. The system according to claim **1**, wherein the cooling device is configured to vary a volume flow rate of cooling fluid delivery to the data center in a proportionate manner to the volume flow rate of cooling fluid removal from the data center.

10. A method of cooling a plurality of racks in a data center, said method comprising:

activating a cooling system and opening a plurality of returns, said returns being configured to remove cooling fluid from various locations of said data center;

supplying cooling fluid to various locations of the data center;

sensing the temperatures of said racks;

determining whether said sensed temperatures are within a predetermined temperature range;

varying said removal of said cooling fluid from said racks in response to said sensed temperatures being outside said predetermined temperature range; and

varying the supply of cooling fluid in response to varying said removal of said cooling fluid.

11. The method according to claim **10**, further comprising:

decreasing the supply of said cooling fluid to said racks in response to a decrease in the removal of said cooling fluid.

12. The method according to claim **10**, wherein at least one of said supply of cooling fluid and said return of cooling fluid is varied in response to one or more of cooling fluid flow, temperature, and pressure being outside a predetermined range.

13. The method according to claim **10**, wherein the step of varying said removal of said cooling fluid from said racks comprises varying at least one of volume flow rate, velocity and direction of cooling fluid removal.

14. The method according claim **10**, wherein the step of varying said removal of said cooling fluid from said racks comprises substantially independently controlling said plurality of returns to thereby substantially independently vary said removal of said cooling fluid from said racks through said plurality of returns.

15. The method according to claim **10**, further comprising:

increasing the supply of said cooling fluid to said racks in response to an increase in the removal of said cooling fluid.

16. An apparatus for cooling a plurality of racks in data center, said apparatus comprising:

means for activating a cooling system and opening a plurality of returns, each of said returns being config-

ured to remove cooling fluid from various locations of said data center;

means for supplying cooling fluid to various locations of the data center;

means for sensing the temperatures of said racks;

means for determining whether said sensed temperatures are within a predetermined temperature range;

means for varying said removal of said cooling fluid from said racks in response to said sensed temperatures being outside said predetermined temperature range; and

means for varying the supply of cooling fluid in response to varying said removal of said cooling fluid.

17. The apparatus according to claim **16**, further comprising:

means for decreasing the supply of said cooling fluid to said racks in response to a decrease in the removal of said cooling fluid.

18. The apparatus according to claim **16**, wherein at least one of said supply of cooling fluid and said return of cooling fluid is determined by one or more of a flow sensor, temperature sensor, and pressure sensor.

19. The apparatus according to claim **16**, wherein the various locations of said data center comprises a plurality of racks.

20. The apparatus according to claim **16**, wherein the means for varying said removal of said cooling fluid from said racks comprises means for varying at least one of volume flow rate, velocity and direction of cooling fluid removal.

21. The apparatus according to claim **16**, wherein the means for varying said removal of said cooling fluid from said racks comprises means for substantially independently controlling said plurality of returns to thereby substantially independently vary said removal of said cooling fluid from said racks through said plurality of returns.

22. The apparatus according to claim **16**, further comprising:

means for increasing the supply of said cooling fluid to said racks in response to an increase in the removal of said cooling fluid.

23. A computer readable medium on which is embedded computer software, said software comprising executable code for performing a method of cooling a plurality of racks in a data center, said method comprising:

activating a cooling system and opening a plurality of returns, each of said returns being configured to remove cooling fluid from various locations of said data center;

supplying cooling fluid to various locations of said data center;

sensing the temperatures of said racks;

determining whether said sensed temperatures are within a predetermined temperature range;

varying said removal of said cooling fluid from said racks in response to said sensed temperatures being outside said predetermined temperature range; and

varying the supply of cooling fluid in response to varying said removal of said cooling fluid.

24. The computer readable medium according to claim **23**, further comprising:

decreasing the supply of said cooling fluid to said racks in response to a decrease in the removal of said cooling fluid.

25. The computer readable medium according to claim **23**, wherein at least one of said supply of cooling fluid and said return of cooling fluid is varied modified in response to one or more of cooling fluid flow, temperature, and pressure being outside a predetermined range.

26. The computer readable medium according to claim **23**, wherein the various locations of said data center comprises a plurality of racks.

27. The computer readable medium according to claim **23**, further comprising:

varying at least one of volume flow rate, velocity and direction of cooling fluid removal.

28. The computer readable medium according to claim **23**, further comprising:

substantially independently controlling said plurality of returns to thereby substantially independently vary said removal of said cooling fluid from said racks through said plurality of returns.

29. The computer readable medium according to claim **23**, further comprising:

increasing the supply of said cooling fluid to said racks in response to increasing the removal of said cooling fluid.

* * * * *

Exhibit 5

US006854287B2

(12) **United States Patent**
Patel et al.

(10) **Patent No.: US 6,854,287 B2**
(45) **Date of Patent: Feb. 15, 2005**

(54) **COOLING SYSTEM**

(75) Inventors: **Chandrakant D. Patel**, Fremont, CA (US); **Cullen E. Bash**, San Francisco, CA (US)

(73) Assignee: **Hewlett-Packard Development Company, L.P.**, Houston, TX (US)

(*) Notice: Subject to any disclaimer, the term of this patent is extended or adjusted under 35 U.S.C. 154(b) by 0 days.

(21) Appl. No.: **10/697,697**

(22) Filed: **Oct. 31, 2003**

(65) **Prior Publication Data**

US 2004/0089011 A1 May 13, 2004

Related U.S. Application Data

(62) Division of application No. 10/210,040, filed on Aug. 2, 2002.

(51) **Int. Cl.**[7] **F25D 23/12**

(52) **U.S. Cl.** **62/259.2**; 62/185; 62/201; 361/696

(58) **Field of Search** 62/259.2, 201, 62/229, 185, 186, 157, 208, 178, 180; 361/696

(56) **References Cited**

U.S. PATENT DOCUMENTS

5,946,926	A	*	9/1999	Hartman	62/201
6,276,152	B1	*	8/2001	Sibik	62/201
6,283,380	B1		9/2001	Nakanishi et al.	
6,374,627	B1		4/2002	Schumacher et al.	
6,557,624	B1		5/2003	Stahl et al.	

* cited by examiner

Primary Examiner—Marc Norman

(57) **ABSTRACT**

A system and method for cooling a room configured to house a plurality of computer systems. A heat exchanger unit is configured to receive air from the room and to deliver air to the room. The heat exchanger unit is supplied with cooling fluid operable to cool the received air in the heat exchanger unit. At least one of the temperature of the cooling fluid supplied to the heat exchanger unit and the air delivery to the room may be controlled in response to temperatures sensed at one or more locations in the room.

22 Claims, 5 Drawing Sheets

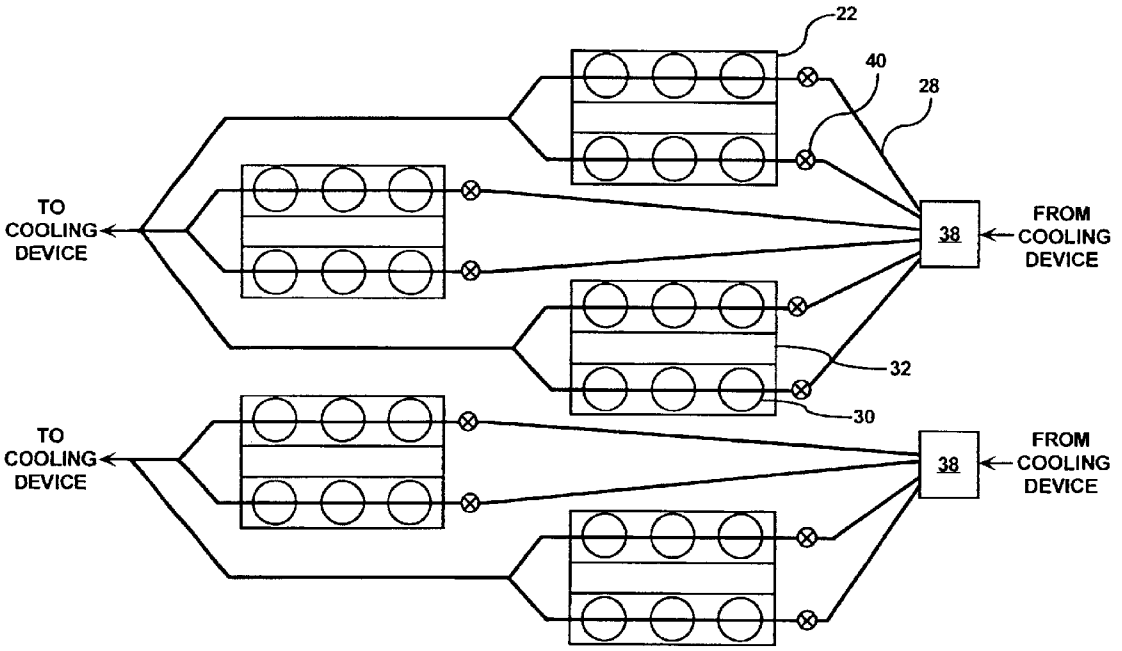

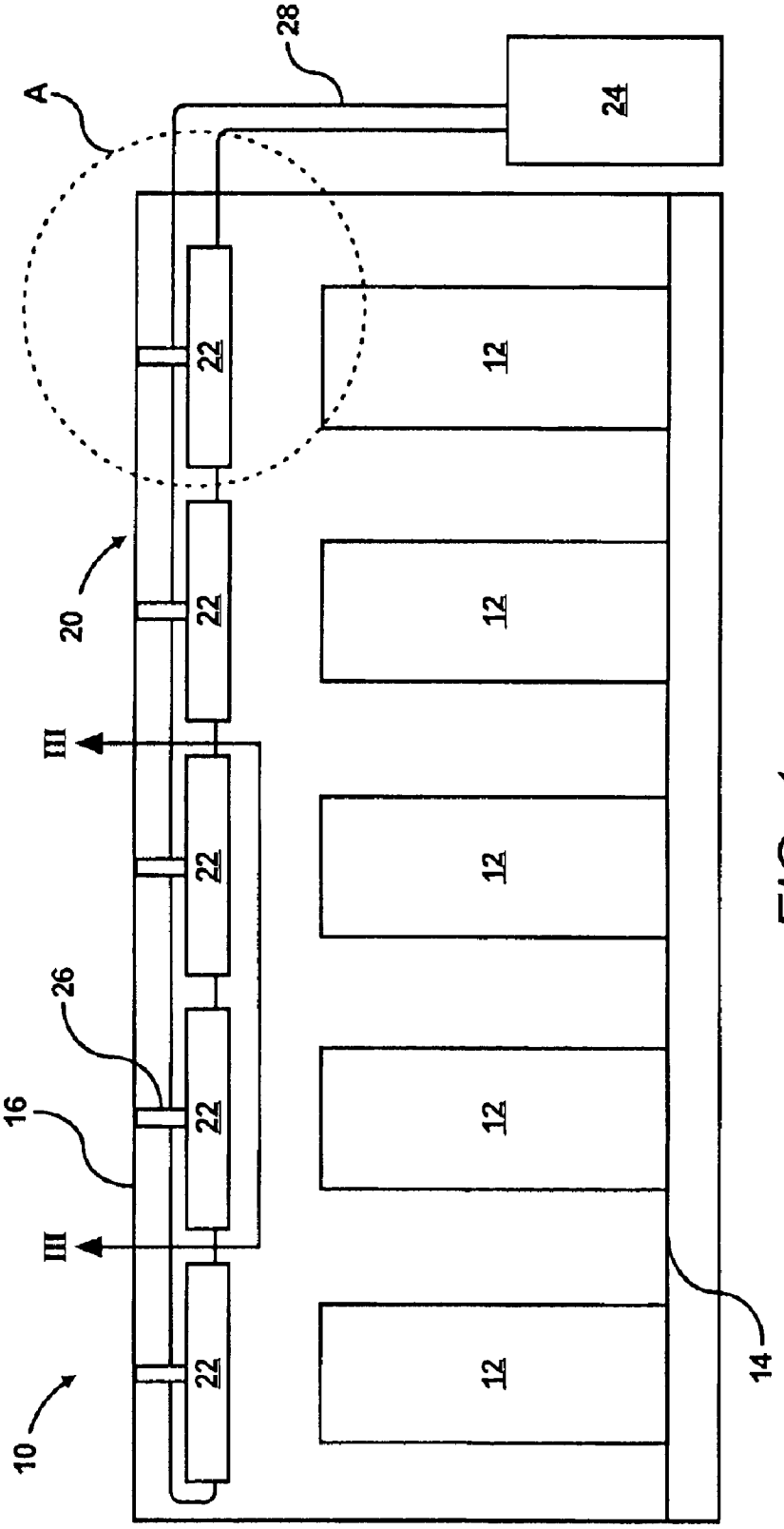

FIG. 1

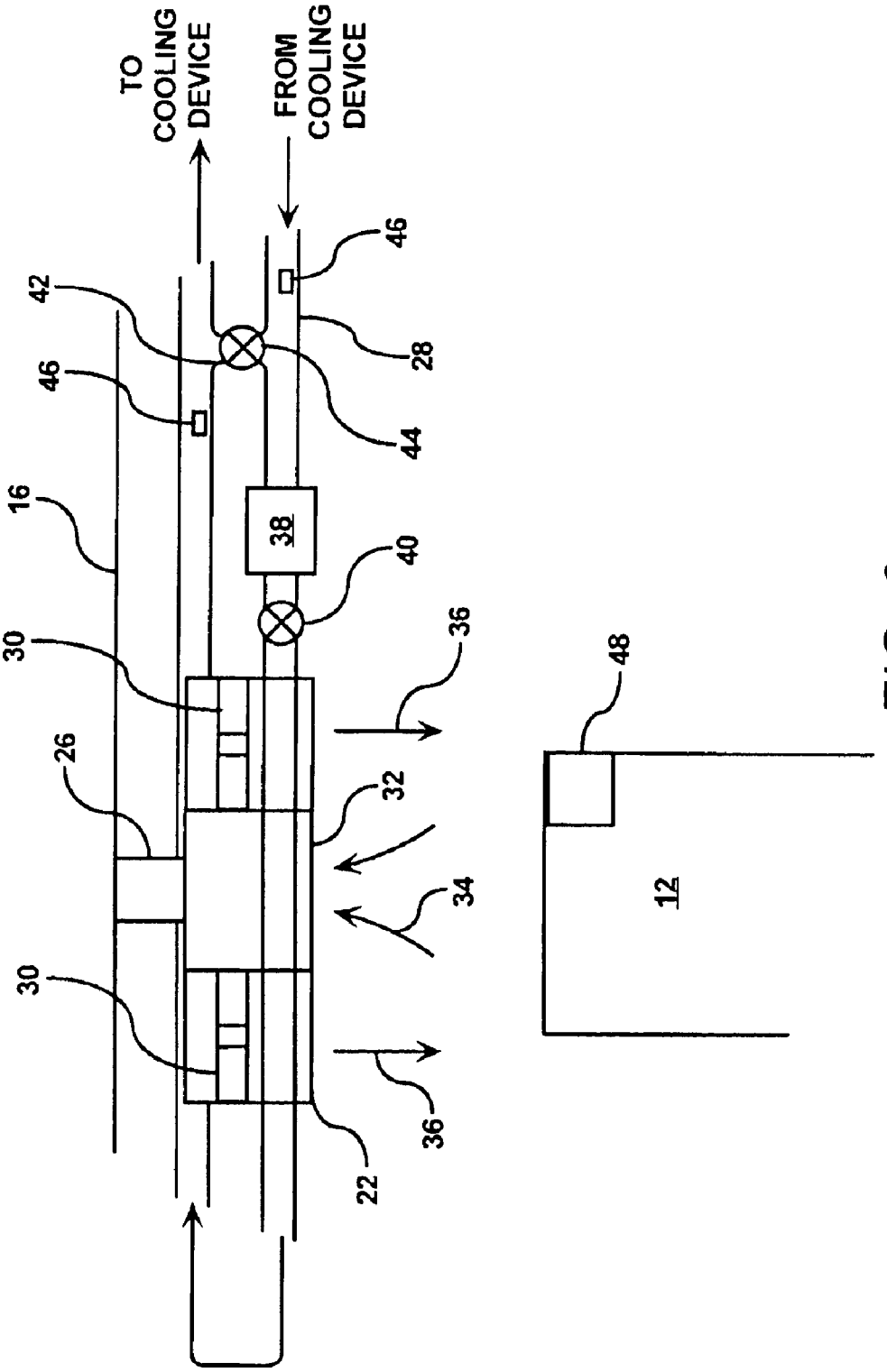
TO COOLING DEVICE
FROM COOLING DEVICE
42
46
16
30
26
30
46
28
44
38
40
36
32
34
36
22
48
12

FIG. 2

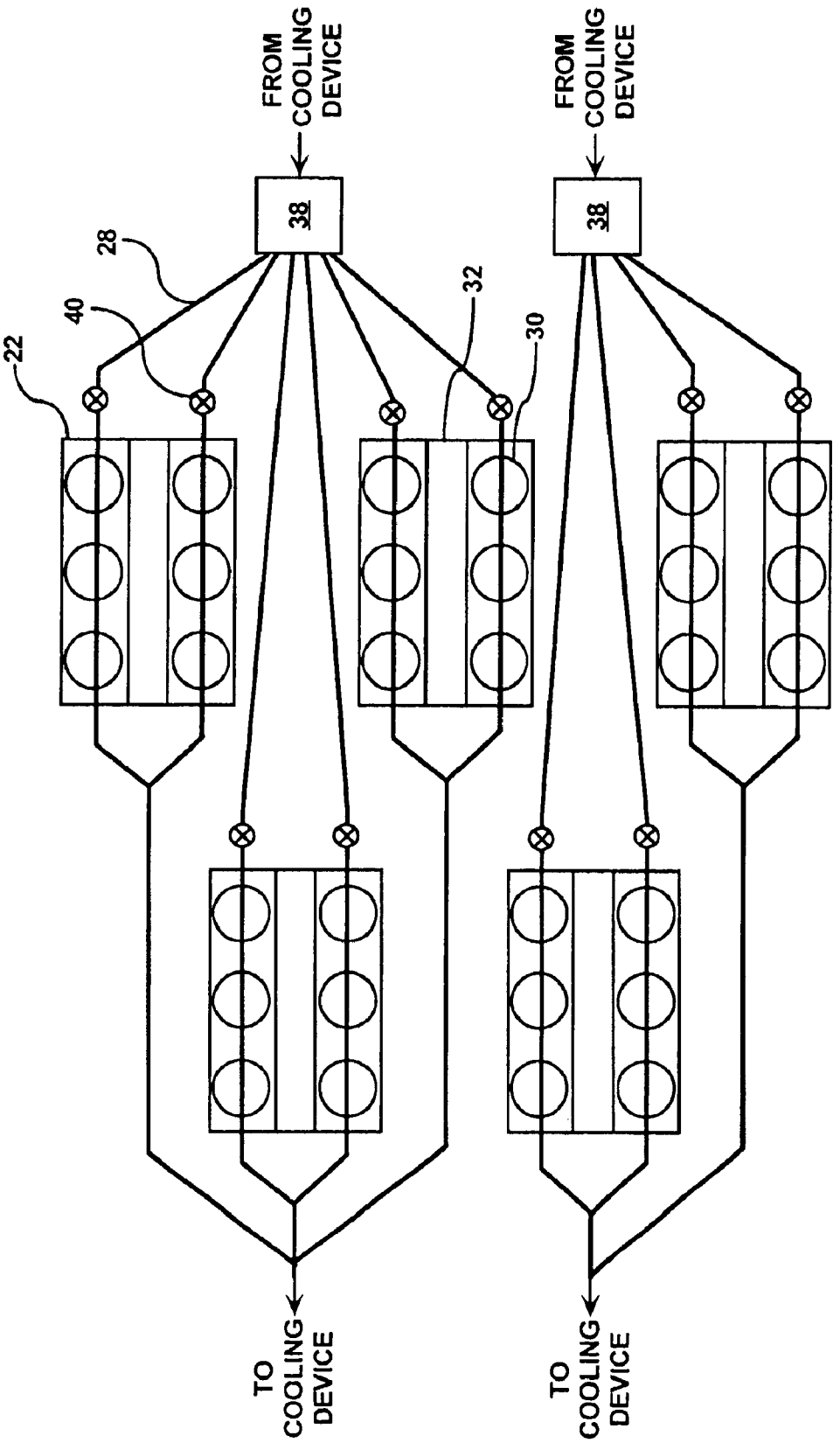
FROM COOLING DEVICE
38
28
40
22
32
30
FROM COOLING DEVICE
38
TO COOLING DEVICE
TO COOLING DEVICE

FIG. 3

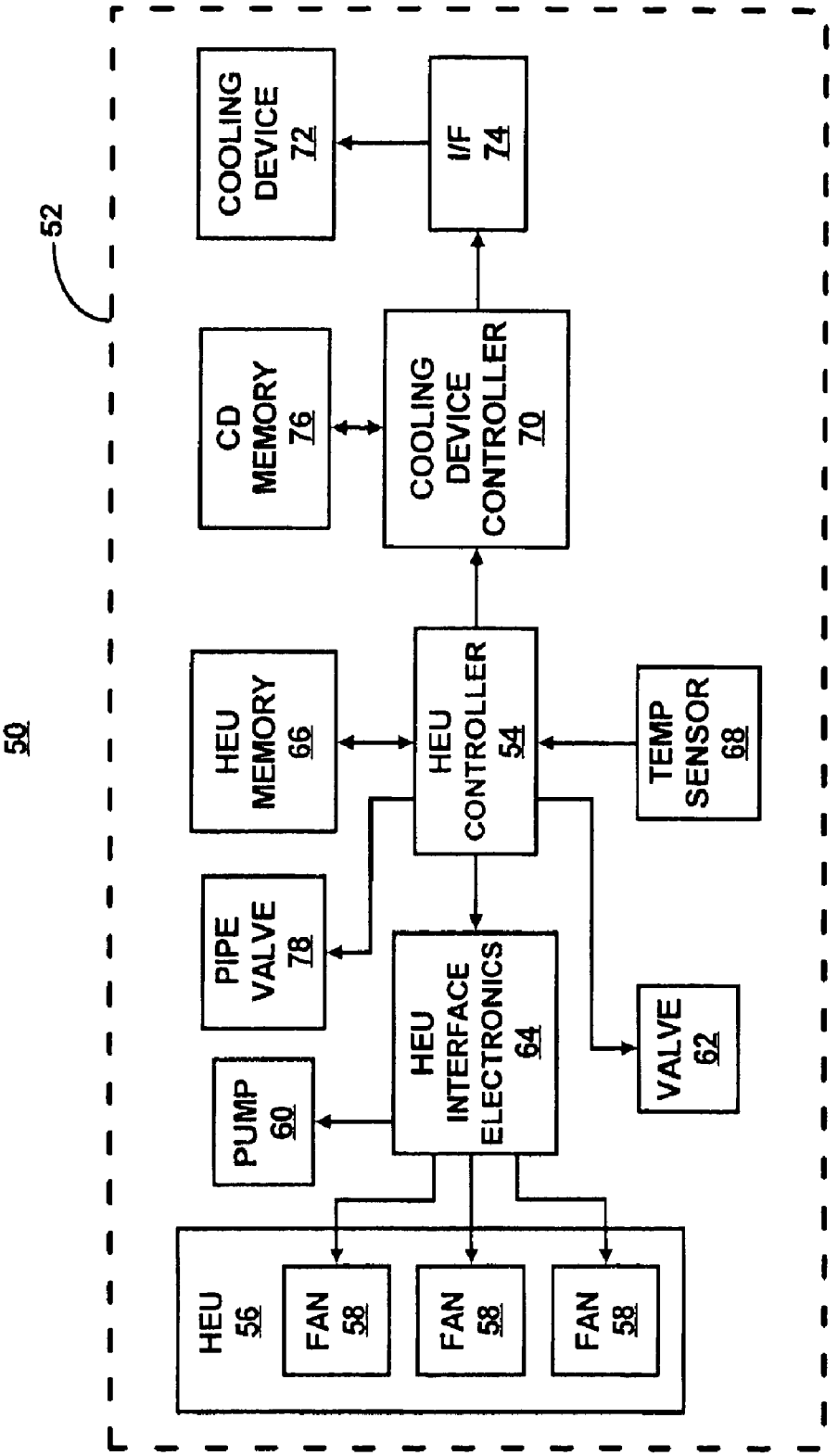
50
52
COOLING DEVICE 72
I/F 74
CD MEMORY 76
COOLING DEVICE CONTROLLER 70
HEU MEMORY 66
HEU CONTROLLER 54
TEMP SENSOR 68
PIPE VALVE 78
HEU INTERFACE ELECTRONICS 64
VALVE 62
PUMP 60
HEU 56
FAN 58
FAN 58
FAN 58

FIG. 4

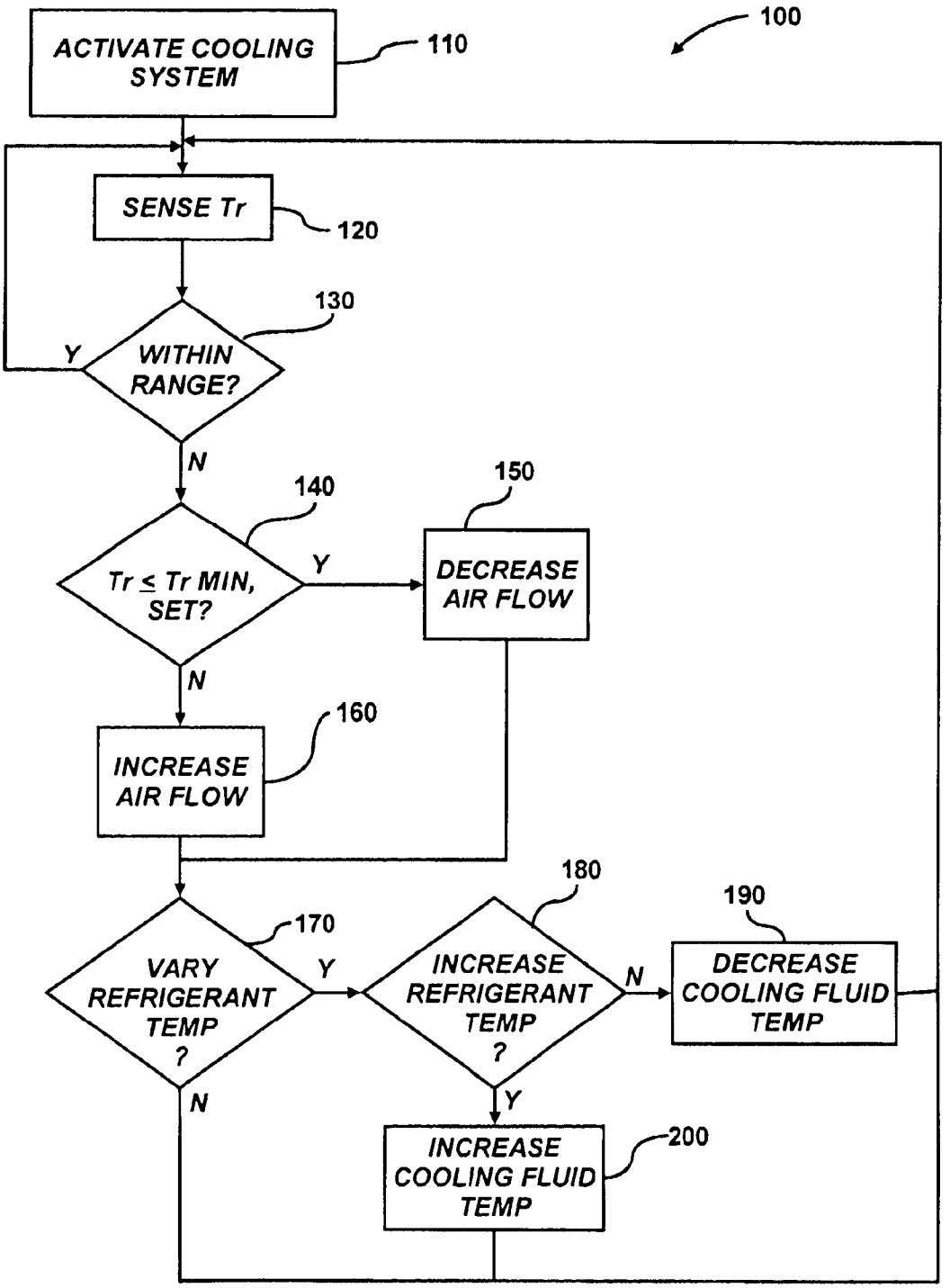
100
ACTIVATE COOLING SYSTEM
110
SENSE Tr
120
130
WITHIN RANGE?
Y
N
140
Tr ≤ Tr MIN, SET?
Y
150
DECREASE AIR FLOW
N
160
INCREASE AIR FLOW
170
VARY REFRIGERANT TEMP ?
Y
N
180
INCREASE REFRIGERANT TEMP ?
N
Y
190
DECREASE COOLING FLUID TEMP
200
INCREASE COOLING FLUID TEMP

FIG. 5

COOLING SYSTEM

CROSS-REFERENCES

This is a divisional of application Ser. No. 10/210,040, filed Aug. 2, 2002.

The present invention is related to pending U.S. application Ser. No. 09/970,707, filed Oct. 5, 2001, and entitled "SMART COOLING OF DATA CENTERS", by Patel et al., U.S. application Ser. No. 10/157,892 filed on May 31, 2002 entitled "CONTROLLED COOLING OF A DATA CENTER", by Patel et al., U.S. application Ser. No. 10/122,010, filed on Apr. 24, 2002, and entitled, "DATA CENTER ENERGY MANAGEMENT SYSTEM", by Friedrich et al., all of which are assigned to the assignee of the present invention and are incorporated by reference herein in their entireties.

FIELD OF THE INVENTION

This invention relates generally to cooling systems.

BACKGROUND OF THE INVENTION

A data center may be defined as a location, e.g., room, that houses computer systems arranged in a number of racks. A standard rack may be defined as an Electronics Industry Association (EIA) enclosure, 78 in. (2 meters) wide, 24 in. (0.61 meter) wide and 30 in. (0.76 meter) deep. Standard racks may be configured to house a number of computer systems, e.g., about forty (40) systems, with future configurations of racks being designed to accommodate up to eighty (80) systems. The computer systems typically include a number of components, e.g., one or more of printed circuit boards (PCBs), mass storage devices, power supplies, processors, micro-controllers, semi-conductor devices, and the like, that may dissipate relatively significant amounts of heat during the operation of the respective components. For example, a typical computer system comprising multiple microprocessors may dissipate approximately 250 W of power. Thus, a rack containing forty (40) computer systems of this-type may dissipate approximately 10 KW of power.

The power required to transfer the heat dissipated by the components in the racks to the cool air contained in the data center is generally equal to about 10 percent of the power needed to operate the components. However, the power required to remove the heat dissipated by a plurality of racks in a data center is generally equal to about 50 percent of the power needed to operate the components in the racks. The disparity in the amount of power required to dissipate the various heat loads between racks and data centers stems from, for example, the additional thermodynamic work needed in the data center to cool the air. In one respect, racks are typically cooled with fans that operate to move cooling fluid, e.g., air, cooling fluid, etc., across the heat dissipating components; whereas, data centers often implement reverse power cycles to cool heated return air. The additional work required to achieve the temperature reduction, in addition to the work associated with moving the cooling fluid in the data center and the condenser, often add up to the 50 percent power requirement. As such, the cooling of data centers presents problems in addition to those faced with the cooling of the racks.

Conventional data centers are typically cooled by operation of one or more air conditioning units. For example, compressors of air conditioning units typically require a minimum of about thirty (30) percent of the required operating energy to sufficiently cool the data centers. The other

components, e.g., condensers, air movers (fans), etc., typically require an additional twenty (20) percent of the required cooling capacity. As an example, a high density data center with 100 racks, each rack having a maximum power dissipation of 10 KW, generally requires 1 MW of cooling capacity. Air conditioning units with a capacity of 1 MW of heat removal generally requires a minimum of 300 KW input compressor power in addition to the power needed to drive the air moving devices, e.g., fans, blowers, etc. Conventional data center air conditioning units do not vary their cooling fluid output based on the distributed needs of the data center. Instead, these air conditioning units generally operate at or near a maximum compressor power even when the heat load is reduced inside the data center.

The substantially continuous operation of the air conditioning units is generally designed to operate according to a worst-case scenario. For example, air conditioning systems are typically designed around the maximum capacity and redundancies are utilized so that the data center may remain on-line on a substantially continual basis. However, the computer systems in the data center may only utilize around 30–50% of the maximum cooling capacity. In this respect, conventional cooling systems often attempt to cool components that may not be operating at a level which may cause their temperatures to exceed a predetermined temperature range. Consequently, conventional cooling systems often incur greater amounts of operating expenses than may be necessary to sufficiently cool the heat generating components contained in the racks of data centers.

SUMMARY OF THE INVENTION

According to one embodiment, the present invention pertains to a method for cooling a room configured to house a plurality of computer systems. In the method, there is provided a heat exchanger unit configured to receive air from the room and to deliver air to the room. The heat exchanger unit is supplied with cooling fluid that is operable to cool the received air in the heat exchanger unit. In addition, temperatures at one or more locations in the room are sensed and at least one of the temperature of the cooling fluid and the air delivery to the room is controlled in response to the sensed temperatures at the one or more locations.

According to another embodiment, the invention relates a system for cooling a room containing one or more computer systems. The system includes a heat exchanger unit configured to receive cooling fluid through a fluid line and to receive air, where the air may be cooled through heat transfer with the cooling fluid. The heat exchanger unit has at least one fan configured to cause air to flow out of the heat exchanger unit. The system also includes a heat exchanger controller operable to control a supply of the cooling fluid to the heat exchanger unit and operable to control the speed of the at least one fan. The system further includes a device for cooling the cooling fluid and a cooling device controller configured to operate the device for cooling to vary the temperature of the cooling fluid.

According to yet another embodiment, the present invention pertains to a system for cooling computer systems housed in one or more racks maintained in a room. The system includes means for cooling air including means for receiving cooling fluid. The system also includes means for delivering cooled air to the computer systems and means for measuring temperatures at one or more locations in the room. Additionally, the system includes means for controlling delivery of the cooled air in response to the temperature

measurements and means for controlling the temperature of the cooling fluid.

BRIEF DESCRIPTION OF THE DRAWINGS

Features of the present invention will become apparent to those skilled in the art from the following description with reference to the figures, in which:

FIG. **1** shows a simplified schematic illustration of a room containing a cooling system in accordance with an embodiment of the invention;

FIG. **2** is an enlarged partly cross-sectional view of section A in FIG. **1**;

FIG. **3** is a schematic illustration taken along lines III—III of FIG. **1**;

FIG. **4** is an exemplary block diagram for a cooling system according to an embodiment of the invention; and

FIG. **5** shows a flow diagram of an operational mode according to an embodiment of the invention.

DETAILED DESCRIPTION OF THE INVENTION

For simplicity and illustrative purposes, the present invention is described by referring mainly to an exemplary embodiment thereof. In the following description, numerous specific details are set forth in order to provide a thorough understanding of the present invention. It will be apparent however, to one of ordinary skill in the art, that the present invention may be practiced without limitation to these specific details. In other instances, well known methods and structures have not been described in detail so as not to unnecessarily obscure the present invention.

According to an embodiment of the present invention, a cooling system may include a heat exchanger unit (HEU) configured to receive cooling fluid (e.g., chilled water, R134a, ethylene glycol mixture, and the like). The HEU may be designed to cause air to exchange heat with the cooling fluid to thereby cool the air. The HEU may also be designed to deliver the cooled air to one or more computer systems. The cooling system may also include a cooling device operable to cool the cooling fluid. The cooling device may comprise one or more of known cooling systems (e.g., a closed loop refrigeration cycle configured to transfer heat with the cooling fluid). The cooling device may therefore include a second generally closed-loop system having refrigerant flowing through a refrigerant line and positioned to receive heat from the cooling fluid.

One or more controllers may be provided to operate the cooling system components. The one or more controllers may be configured to monitor environmental conditions within the room, and more particularly in areas around predetermined computer systems, and manipulate operation of the HEU and the cooling device according to the monitored environmental conditions. For example, the one or more controllers may control the temperature of the cooling fluid and/or the output of the HEU.

In one respect, by manipulating the output of the HEU and the temperature of the cooling fluid, the amount of energy required to cool the computer systems may be relatively low. Thus, according to the embodiment described above, instead of operating components of the cooling device, e.g., compressors, heat exchangers, fans, etc., at substantially 100 percent of the anticipated heat dissipation from the computer systems, those components may be operated according to the actual cooling needs. In addition, the computer systems and the racks in which they are housed may be positioned throughout the room according to their anticipated heat loads, to additionally increase control over the energy required by the cooling system. Furthermore, as described in U.S. application Ser. No. 10/122,010, filed on Apr. 24, 2002, the loads may be distributed between various computer systems to further increase energy efficiency of air conditioning resources.

In another respect, the positioning of the racks may be determined through implementation of numerical modeling and metrology of the cooling fluid flow throughout the data center. In addition, the numerical modeling may be implemented to determine the volume flow rate and velocity of the cooling fluid flow through each of the HEU's.

A more detailed description of the above-described embodiment may be found in co-pending U.S. application Ser. No. 09/970,707, filed Oct. 5, 2001, which is assigned to the assignee of the present invention and is incorporated by reference herein in its entirety.

Referring first to FIG. **1**, there is illustrated a room **10**, e.g., a data center, housing a plurality of racks **12**, and a cooling system **20**. Also illustrated is a raised floor **14** that may be provided to enable placement of wires, tubes, and the like for delivery into and from the racks **12**.

The racks **12** may generally house a plurality of components (not shown), e.g., processors, micro-controllers, memories, semi-conductor devices, and the like. The components may be elements of a plurality of subsystems (not shown), e.g., computers, servers, etc. The subsystems and the components may be implemented to perform various electronic, e.g., computing, switching, routing, displaying, and the like, functions. In the performance of these electronic functions, the components, and therefore the subsystems, may dissipate relatively large amounts of heat. Because the racks **12** have been generally known to include upwards of forty (40) or more subsystems, they may require substantially large amounts of cooling fluid to maintain the subsystems and the components generally within a predetermined operating temperature range. According to an embodiment of the invention, by substantially controlling the amount of cooling air delivered to the components and the subsystems located in the racks **12** based upon their respective heat loads, the power consumed by the cooling system **20** to cool and supply the cooling fluid may also be controlled.

The cooling system **20** is illustrated as including a plurality of HEU's **22** and a cooling device **24**. The HEU's **22** may be supported from a ceiling **16** of the room **10** by one or more supports **26**. The HEU's **22** may comprise any reasonably suitable air conditioning unit designed to receive air and to deliver the received air, e.g., the DATACOOL environmental control system manufactured and distributed by Liebert of Irvine, Calif. As can be seen in FIG. **1**, the HEU's **22** are positioned to receive air that may become heated by virtue of the heat dissipated by, for example, the computer systems located in the racks **12**. Although an HEU **22** is illustrated as positioned over a rack **12**, it should be understood that the HEU's **22** may be positioned at various other locations. For example a plurality of HEU's **22** may be positioned to cool a single rack. Determinations of HEU **22** placement within the room **10** may be predicated upon techniques designed to optimize cooling performance and/or energy efficiency.

The HEU's **22** may be positioned to generally supply the racks **12** with cooling air. More particularly, the HEU's **22** may be positioned to supply cooling air to the racks **12** in accordance with their heat dissipation. By way of example,

computer systems that undergo higher loads are known to generate greater amounts of heat as compared to computer systems that undergo lower or no loads. Thus, the HEU's **22** may be positioned and operated to supply those computer systems (and racks **12**) that generate greater amounts of heat with greater mass flow rates of cooling air and/or relatively lower temperature air. In addition, those computer systems (and racks **12**) that generate little or no heat, may likewise, receive little or no cooling air and/or relatively higher temperature air. In this respect, the amount of energy required to operate the HEU's **22** specifically, and the cooling system **20** as a whole, may be substantially optimized according to the demands of the computer systems.

Alternatively, or additionally to the above, because usage of the computer systems contained in the racks **12** may vary at different times of the day, instead of varying the position of the HEU's **22**, the load placed on the computer systems may be varied. For instance, as described in co-pending U.S. application Ser. No. 10/122,010, the work load on some of the computer systems may be performed by other computer systems to substantially maximize energy efficiency of the cooling system. In this regard, the load may be transferred, for example, to one location in the room **10** if it is determined that such a load transfer is more energy efficient than under normal operating conditions. Moreover, the load transfer may occur at different times of the day and as load requirements vary.

The cooling device **24** may comprise any reasonably suitable type of cooling device designed to adequately cool the cooling fluid. In addition, the cooling device **24** may include the capability of varying the temperature of the cooling fluid. Some suitable cooling devices may include those that implement air conditioners, heat exchangers, heat pumps, variable capacity chillers, evaporative cooling systems, and the like. For example, the cooling device **24** may comprise a closed-loop refrigeration cycle apparatus having a heat transfer section where the heat from the cooling fluid in a fluid line **28** may be transferred to refrigerant contained in the closed-loop refrigeration cycle apparatus.

Although the cooling device **24** is illustrated as being located outside of the room **10**, it should be understood that the cooling device **24** may be positioned within the room **24** without deviating from the scope of the present invention.

The cooling fluid may be configured to flow through the HEU's **22** and return to the cooling device **24** via fluid lines **28**. As seen in FIG. **1**, the fluid line **28** generally forms a closed loop system in which the cooling fluid may become heated in the HEU's **22** and cooled in the cooling device **24**.

Although one room **10** is illustrated in FIG. **1**, it should be understood that the room **10** may comprise more than one room and that the cooling system **20** may be configured to cool a plurality of rooms.

With reference now to FIG. **2**, there is illustrated an enlarged partly cross-sectional view of section A in FIG. **1**. As seen in FIG. **2**, the HEU **22** generally comprises, among other things, a plurality of fans **30** and an opening **32**. The fans **30** are designed to cause air from the room **10** to flow into the opening **32**, as indicated by arrows **34**. The fans **30** are also configured to cause the air to flow back out into the room **10**, in the manner indicated by arrows **36**. It should be understood that the HEU **22** may include additional components and that some of the components described may be removed and/or modified without departing from the scope of the invention.

The fluid line **28** is situated to run through the HEU **22** below the fans **30** and in the direction of air flow from the HEU **22** to the room **10**. In this respect, as the air flows by the fluid line **28**, heat may be transferred from the air to the cooling fluid contained in the fluid line **28**. Consequently, the air flowing out of the HEU **22** may be at a lower temperature relative to the air entering the HEU **22**.

A pump **38** may be provided along the fluid line **28** at a location generally upstream of the HEU **22**. The pump **38** may be designed to apply sufficient pressure to the cooling fluid entering the HEU **22** to enable the cooling fluid to flow at a predetermined rate through the HEU **22**. In this respect, the pump **38** may comprise any pump capable of performing the above-described operations in a reasonably suitable manner. The pump **38** may be configured to supply cooling fluid to a plurality of HEU's **22** and to control the pressure of the cooling fluid flowing through one or more of the HEU's **22**. A valve **40** is illustrated between the pump **38** and the HEU **22** along the fluid line **28**. The valve **40** may be an electronically controllable valve capable of varying the flow of cooling fluid through the fluid line **28**, as well as substantially stopping the flow of the cooling fluid. As a result, the volume flow rate of the cooling fluid through the fluid line **28** extending through the HEU **22** may be manipulated at predetermined levels such that the temperature of the air flowing out of the HEU **22** may be substantially optimized.

Although the pump **38** and the valve **40** are illustrated as separate components, it should be understood that their respective functions may be performed by a single component, e.g., the pump **38**. In this example, the pump **38** may be configured as a variable speed pump configured to vary the flow of cooling fluid through the HEU **22**.

A pipe **42** may be located along the fluid line **28** at a location downstream of the HEU **22**. The pipe **42** may enable cooling fluid that has passed through the HEU **22** to be introduced into cooling fluid entering into the HEU **22**. A pipe valve **44** may be positioned along the pipe **42** to substantially control the amount of this cooling fluid introduced into the cooling fluid entering into the HEU **22**. The pipe valve **44** may be any reasonably suitable valve (e.g., a three-way valve) capable of controlling the cooling fluid flow through the pipe **42**.

In this respect, the temperature of the cooling fluid may thus be further controlled. By way of example, the temperature of the cooling fluid may be increased prior to its introduction into an HEU **22** in a multi-HEU system (see e.g., FIG. **3**). In this type of configuration, when one rack **12** is dissipating a greater amount of heat relative to another rack **12**, the temperature of cooling air flow supplied to each of these racks may differ from one another. That is, the rack **12** dissipating the greater amount of heat may receive air flow from a first HEU **22** that is at a lower temperature compared to the rack that is dissipating a lesser amount of heat. Consequently, the temperature of the cooling fluid introduced into that first HEU may be at a lower temperature than the cooling fluid introduced into a second HEU.

Temperature sensors **46** may be located in a supply portion and a return portion of the fluid line **28** such that a determination may be made as to changes in the cooling fluid temperature prior to and following flow through the HEU **22**. This information may be implemented to determine the amount of return cooling fluid to be introduced into the supply portion of the fluid line **28**.

A temperature sensor **48** e.g., a thermocouple or the like, is illustrated on the rack **12**. A single temperature sensor **48** is depicted in FIG. **2** for purposes of simplicity, it should, however, be understood that a plurality of temperature sensors **48** may be positioned at various locations of the rack

12 as well as other areas of the room 12. The temperature sensor 48 may supply temperature readings to a controller (not shown) configured to operate the HEU 22, the pump 38, the valve 40, and the pipe valve 44. In addition, the temperature readings may also be supplied to a controller (not shown) configured to operate the cooling device 24. The manner of information transmittal between the temperature sensor 48 and the controllers may comprise any reasonably suitable arrangement, e.g., wired or wireless connection.

In place of, or in addition to, the temperature sensor 48, a mobile device (not shown) designed to gather or measure at least one local environmental condition (e.g., temperature, air flow, humidity, etc.) in the room 10 may be implemented. By way of example, a suitable mobile device may comprise the environmental condition detecting device described in co-pending U.S. application Ser. No. 10/157,892, filed on May 31, 2002 entitled "CONTROLLED COOLING OF A DATA CENTER", by Patel et al., which is assigned to the assignee of the present invention and incorporated by reference herein in its entirety. Information gathered by the mobile device may be transmitted to the controller, which may vary operation of the cooling system 20 in response to the information.

Alternatively, or in addition to, the above-described environmental condition sensing devices, the amount of heat generated by the computer systems contained in the racks 12, and the resulting necessary cooling requirements, may be anticipated according to the amount of load placed on the computer systems. A suitable method of implementing anticipated sensing is described in co-pending U.S. application Ser. No. 09/970,707, which is assigned to the assignee of the present invention and incorporated by reference herein in its entirety.

Referring now to FIG. 3, there is shown a schematic illustration taken along lines III—III of FIG. 1. FIG. 3 illustrates a plurality of HEU's 22 and a plurality of fluid lines 28 emanating from a pair of pumps 38. The illustration also shows that the HEU's 22 include rows of fans 30 located adjacent to the openings 32. Situated beneath each of the fans 30 are fluid lines 28. In addition, located generally upstream of the HEU's 22 are respective valves 40, which may comprise three-way valves. As can be seen in FIG. 3, the pumps 38 may control the supply of cooling fluid through a plurality of HEU's 22. In addition, it may be seen that the valves 40 generally enable control of cooling fluid flow through respective fluid lines 28.

In this respect, the temperature of the air flowing out of the HEU's 22, and more specifically, out of each side of the HEU's 22 may be controlled in substantially independent manners (e.g., by operation a three-way valves (not shown)). In one regard, the flow of cooling fluid through certain HEU's 22 may be restricted or substantially halted, for instance, in situations where the computer systems for which an HEU 22 is configured to cool are in idle states. It should be understood that the configuration of HEU's 22, pumps 38, fluid lines 28, and valves 40 depicted in FIG. 3 is but one manner of a variety of different obtainable configurations. It should also be understood that the specific configuration for any given room may depend upon a multitude of factors, e.g., cooling needs, room configuration, cooling device type, etc. In addition, the fluid lines 28 may be positioned above the fans 30 such that air may substantially be cooled prior to flowing into the fans 30 without deviating from the scope of the present invention.

FIG. 4 is an exemplary block diagram 50 for a cooling system 52 according to an embodiment of the invention. It should be understood that the following description of the block diagram 50 is but one manner of a variety of different manners in which such a cooling system 52 may be operated. In addition, it should be understood that the cooling system 52 may include additional components and that some of the components described may be removed and/or modified without departing from the scope of the invention.

The cooling system 52 includes an HEU controller 54 configured to control the operations of the HEU 56. The HEU controller 54 may comprise a microprocessor, a micro-controller, an application specific integrated circuit (ASIC), and the like. The HEU controller 54 may, for example, control the speed of the fans 58, the operation of the pump 60, the valve 62, and the pipe valve 78. Interface electronics 64 may be provided to act as a control interface between the HEU controller 54 and the HEU 56, pump 60, and valve 62. Alternatively, a control interface my be omitted between the HEU controller 54 and the above-described components as seen with respect to the connection between the HEU controller 54 and, for example, the pipe valve 78. The HEU controller 54 may also be interfaced with a temperature sensor 68, e.g., one or more of the temperature sensors described hereinabove with respect to FIG. 2.

The HEU controller 54 may be interfaced with an HEU memory 66 configured to provide storage of a computer software that provides the functionality of the HEU controller 54, e.g., the speed of the fans, pump operation, etc. The HEU memory 66 may be implemented as a combination of volatile and non-volatile memory, such as dynamic random access memory (DRAM), EEPROM, flash memory, and the like. The HEU memory 66 may also be configured to provide a storage for containing data and/or information pertaining to the manner in which HEU controller 54 may operate the fans 58, the pump 60, the valve 62, and the pipe valve 78. In one respect, the manner of operation of the above-described components may be based according to temperature measurements by the temperature sensor 68.

The HEU controller 54 may be further interfaced with a cooling device controller 70. The interface may be effectuated via a wired protocol, such as IEEE 802.3, etc., wireless protocols, such as IEEE 801.11b, wireless serial connection, Bluetooth, etc., or combinations thereof.

The cooling device controller 70 may be configured to control the operations of the cooling device 72. The cooling device controller 70 may comprise a microprocessor, a micro-controller, an application specific integrated circuit (ASIC), and the like. The cooling device controller 70 is generally configured to manipulate the temperature of the cooling fluid by controlling the operation of the cooling device 72. In this regard, the cooling device 72 may comprise a variable speed compressor, a heat exchanger, a chilled water heat exchanger, a centrifugal chiller, and the like. More particularly, the cooling device controller 70 may be designed to vary the operation of one or more of the above-recited components to vary the amount of heat transfer on the refrigerant contained in the refrigeration loop of the cooling device 72 to thereby vary the cooling fluid temperature.

Interface electronics (I/F) 74 may be provided to act as an interface between the cooling device controller 70 and the components for operating the cooling device 72, e.g., the supply of voltage to vary the speed of the compressor, control of the heat exchanger (centrifugal chiller) capacity, etc.

The cooling device controller 70 may also be interfaced with a cooling device (CD) memory 76 configured to

provide storage of a computer software that provides the functionality of the cooling device **72**, e.g., compressor, heat exchanger, and the like, and may be executed by the cooling device controller **70**. The CD memory **76** may be implemented as a combination of volatile and non-volatile memory, such as DRAM, EEPROM, flash memory, and the like. The CD memory **76** may also be configured to provide a storage for containing data/information pertaining to the manner in which the compressor (heat exchanger, chiller) may be manipulated in response to, for example, variations in the temperature of the cooling fluid and/or air in the room.

In one respect, the capacity (e.g., the amount of work exerted on the cooling fluid) of the compressor (heat exchanger, chiller, etc.) may be modified to thereby control the temperature and of the cooling fluid. The compressor (heat exchanger, chiller, etc.) may thus be controlled to either increase or decrease the mass flow rate of the refrigerant flowing therethrough. Consequently, when the temperature in the room **10** is below a predetermined range, the capacity of the (heat exchanger, chiller, etc.) may be reduced to substantially reduce the amount of work, thus the amount of energy exerted on the refrigerant. This may lead to a significant reduction in the costs associated with operating the cooling system **52** as compared with conventional cooling systems.

Because the specific type of compressor (heat exchanger, chiller, etc.) to be employed with embodiments of the invention may vary according to individual needs, the invention is not limited to any specific type of compressor (heat exchanger, chiller, etc.). Instead, any reasonably suitable type of compressor (heat exchanger, chiller, etc.) capable of accomplishing certain aspects of the invention may be employed with the embodiments of the invention. The choice of compressor (heat exchanger, chiller, etc.) may therefore depend upon a plurality of factors, e.g., cooling requirements, costs, operating expenses, etc.

By way of example, if there is a detected or anticipated change in the temperature of a rack, e.g., rack **12**, areas surrounding the rack, etc., the HEU controller **54** may operate to manipulate the corresponding HEU **56** and/or fan(s) **58** to compensate, e.g., change the volume flow rate, velocity, and other characteristic of the air flow, for the change in temperature. In addition, or as an alternative to the above, the cooling device controller **70** may operate to cause the cooling device **72** to lower the refrigerant temperature. In this respect, each of the racks **12** and/or portions thereof may generally receive substantially only the amount of cooling air necessary to maintain the temperature of the racks **12** within a predetermined temperature range. In addition, the refrigerant, and therefore the cooling fluid, temperature may also be controlled as needed to substantially optimize cooling of the racks **12**. By controlling the cooling air flow in the above-described manner, the cooling system **52** may be operated at substantially optimized levels, thereby decreasing the amount of energy and thus the operating costs required to cool the computer systems in the racks **12**.

Moreover, the cooling device controller **70** may operate the compressor (heat exchanger, chiller, etc.) in a manner to vary the cooling fluid temperature in response to various degrees of detected increases/decreases in the operation of the HEU **56**. More particularly, a look up table (not shown) may be stored in the CD memory **76**. The look up table may include information pertaining to the level of compressor speed (heat exchanger capacity, etc.) increase necessary for a detected increase in the operation of the HEU **56**. In this respect, the compressor speed (heat exchanger capacity, etc.) may be varied substantially incrementally in response to detected changes in the operation of the HEU **56**.

FIG. **5** shows a flow diagram of an operational mode **100** according to an embodiment of the invention. It should be understood that the operational mode **100** may include additional operations and that some of the operations may be removed and/or modified without departing from the scope of the invention. The following description of the operational mode **100** is made with reference to the block diagram **50** illustrated in FIG. **4**, and thus makes reference to the elements cited therein.

The operations illustrated in the operational mode **100** may be contained as a utility, program, or a subprogram, in any desired computer accessible medium. In addition, the operational mode **100** may be embodied by a computer program, which can exist in a variety of forms both active and inactive. For example, they can exist as software program(s) comprised of program instructions in source code, object code, executable code or other formats. Any of the above can be embodied on a computer readable medium, which include storage devices and signals, in compressed or uncompressed form.

Exemplary computer readable storage devices include conventional computer system RAM, ROM, EPROM, EEPROM, and magnetic or optical disks or tapes. Exemplary computer readable signals, whether modulated using a carrier or not, are signals that a computer system hosting or running the computer program can be configured to access, including signals downloaded through the Internet or other networks. Concrete examples of the foregoing include distribution of the programs on a CD ROM or via Internet download. In a sense, the Internet itself, as an abstract entity, is a computer readable medium. The same is true of computer networks in general. It is therefore to be understood that those functions enumerated below may be performed by any electronic device capable of executing the above-described functions.

In the operational mode **100**, the cooling system **52** is activated at step **110**. At step **120**, the temperature of one or more racks (Tr) is sensed by temperature sensors, e.g., one or more temperature sensors **68**. The temperature sensors may comprise one or more of the above-described temperature sensors, e.g., thermocouple, mobile environmental condition sensing device, etc. The Tr's generally correspond to the heat load of the heat dissipating components and therefore the computer systems contained in the racks, e.g., rack **12**. Therefore, the Tr's may be based upon the temperatures of specific heat dissipating components and subsystems. In addition, the Tr's may be based upon the temperatures in the general vicinity of the racks and/or sections of the racks. Thus, those skilled in the art will understand that certain embodiments of the present invention may be employed with temperature sensors located at various positions throughout the room, e.g., room **10**. Moreover, use of the term "rack" herein generally refers to racks for supporting computer systems and additionally to sections of the racks as well as areas around the racks. Therefore, the use of the term "rack" throughout the present disclosure is not meant to limit certain aspects thereof to entire racks, but instead, is relied upon to simplify the description of certain embodiments of the present invention.

As an alternative to the temperature sensor **68**, the Tr's may be anticipated in the manner described hereinabove and in co-pending U.S. patent application Ser. No. 09/970,707.

At step **130**, it is determined whether each of the Tr's is within a predetermined range of operating temperatures,

e.g., between a maximum set point temperature (Tmax,set) and a minimum set point temperature (Tmin,set). In general, the range of temperatures Tmin,set and Tmax,set pertains to threshold temperatures to determine whether to increase or decrease the flow of cooling air delivered to the racks. This range of operating temperatures may be set according to a plurality of factors. These factors may include, for example, the operating temperatures set forth by the manufacturers of the subsystems and components located in the racks, through testing to determine the optimal operating temperatures, etc. In addition, the predetermined range of operating temperatures may vary from one subsystem to another.

For those racks having Tr's that are within the predetermined range, their temperatures are sensed again at step **120**. For those racks determined to have heat loads that do not fall within the predetermined temperature range, i.e., fall outside of Tmin,set and Tmax,set, the HEU controller **54** may determine whether those racks have temperatures that are below the Tmin,set at step **140**.

The air flow supplied by the HEU **56**, and more particularly the fans **58**, configured to supply cooling air flow to the racks having Tr's below or equal to the Tmin,set, may be decreased at step **150**. In addition, and/or alternatively, the temperature of the cooling fluid supplied through the HEU's **56** may be increased to thereby increase the temperature of the air supplied to these racks. As described hereinabove, this may be accomplished by decreasing the work placed on the refrigerant by the cooling device **72** and/or by opening the bypass valve **62**. Additionally, the temperature of the air flowing from the HEU **56** may also be increased by causing the valve **78** to enable a lower volume flow rate of cooling fluid to flow therethrough.

The air flow supplied by the HEU **56** configured to supply cooling air flow to the racks having Tr's above the Tmin,set, and thus above the Tmax,set, may be increased at step **160**. In this regard, the HEU controller **54** may increase power to the fans **58** to enable greater air flow to the racks. In addition, and/or alternatively, the HEU controller **54** may increase the flow of cooling fluid through the HEU **56** via operation of the pump **60** and/or the valve **78**.

By virtue of certain embodiments of the invention, racks having various Tr's may be supplied with air flow having various characteristics, e.g., temperature, velocity, direction, and the like. That is, for example, in a system comprising a plurality of HEU's **56**, air flow may be supplied to racks having higher Tr's by certain HEU's **56** substantially simultaneously with air flow supplied to racks having relatively lower Tr's by other HEU's **56** where each of the racks receives different levels of air flow. Additionally, the temperature of the cooling fluid supplied through the HEU's **56** delivering air flow to racks having higher Tr's may be relatively lower than the temperature of the cooling fluid supplied through the HEU's **56** delivering air flow to racks having lower Tr's. It should thus be appreciated that steps **150** and **160** may be respectively and substantially simultaneously performed by various HEU's **56**.

According to an embodiment of the invention, the decrease in volume flow rate and/or velocity of the air flow at step **150** and the increase in volume and/or velocity of the air flow at step **160** may be accomplished by incrementally varying the air flow from the HEU **56**. For example, the volume flow rate and/or velocity of the air flow from the HEU **56** may be varied by a predetermined amount during a first iteration. The Tr may be measured at a predetermined time following the variation and steps **130–160** may be repeated. By repeating this process a number of times, the temperature of the rack may be substantially brought within the predetermined range.

At step **170**, the cooling device controller **70** may determine whether to vary the cooling fluid temperature, e.g., increase the compressor speed (heat exchanger capacity, etc.). The cooling fluid temperature may be decreased in response to, for example, actual and/or detected increases in Tr. In the alternative, the decrease in cooling fluid temperature may be predicated upon the amount of work performed by the HEU **56**. More particularly, as the work performed by the HEU **56** increases, thereby signaling an increase in the Tr, the cooling device controller **70** may cause the cooling device **72** to decrease the refrigerant temperature. In addition, when a plurality of HEU's **56** are implemented to cool one or more racks, the cooling device controller **70** may determine whether the total amount of decreases in the volume flow rates of the cooling air exceeds the total amount of increases in the volume flow rates flow of the cooling air. At step **180**, the cooling device controller **70** may determine whether to decrease the cooling fluid temperature.

At step **190**, the cooling device controller **70** may cause the cooling fluid temperature to be decreased in response to a determination to do so at step **180**. Alternatively, the cooling device controller **70** may cause the cooling fluid temperature to be increased at step **200** in response to a determination to do so at step **180**. As described hereinabove, the cooling device controller **70** may operate to vary the temperature of the cooling fluid by varying the speed of the compressor, capacity of the heat exchanger, and the like.

It should be understood that steps **150**, **160**, and **190** or **200** may be performed substantially simultaneously. More particularly, on a zonal level, temperature readings determined at step **120** for various racks may be implemented in varying the delivery of cooling air to the various racks. Additionally, on a global level, the temperature of the cooling fluid may be varied according to the changes in the cooling requirements of the racks. For example, when the temperature of a rack exceeds a predetermined threshold range, the HEU(s) **56** supplying cooling air flow to that rack may increase the air flow to that rack. Substantially concurrently, the temperature of the cooling fluid may be decreased by an amount relative to the increased rack temperature.

Following steps **190** or **200**, the Tr's are sensed again at step **120**. In addition, the steps following step **120** may be repeated for an indefinite period of time and may form a closed-loop pattern.

In accordance with embodiments of the present invention, the cooling requirements of a room configured to house computer systems may be analyzed to substantially optimize the layout of the racks within the room. In one respect, the substantial optimization of the rack layout in the room may enable the cooling system of the data center to operate at generally lower energy and greater efficiency levels by virtue of the reduced workload placed on the components of the cooling systems, e.g., compressors, HEU's, etc. In addition, the cooling requirements may be analyzed to optimize the workload of the computer systems as described above. In this regard, the actual or anticipated temperatures may be stored in a look-up table and used as references in optimizing the room layout and/or workload distribution. The cooling requirements within the room may be analyzed by operation of any reasonably suitable commercially available computational fluid dynamics (CFD) tool, e.g.,

FLOVENT, a 3-D modeling software capable of predicting temperature variations based upon fluid flow analyses.

By virtue of the numerical modeling, various cooling devices as well as the HEU's described hereinabove may be positioned throughout the room to substantially control the manner in which the racks receive the cooling fluid.

In addition, the cooling devices may also be positioned to substantially maximize and optimize their performances, e.g., to prevent one or more of the cooling devices from operating at substantially excessive levels.

In determining the cooling air distribution requirement within the room, each of the racks may be assigned a heat load which may correspond to a maximum heat load predicted for that rack, e.g., through anticipated power draw. For example, a rack containing 40 subsystems, e.g., computers, may have a maximum heat load of 10 KW and a rack containing 20 subsystems may have a maximum heat load of 5 KW. By implementing the CFD in this manner, for example in a room containing 100 racks, four cooling devices, and a plurality of HEU's, racks having a potential for relatively larger heat loads may be relatively separately located throughout the data center. In one respect, therefore, the cooling devices and the HEU's within the room may be operated at substantially less than maximum power levels while the racks may receive sufficient amounts of cooling fluid. More specifically, the power required to operate the cooling devices and the HEU's may be regulated to efficiently supply cooling fluid to the racks by providing substantially only that amount of cooling fluid necessary to maintain the racks within nominal operating temperatures.

Additionally, a CFD tool may be implemented substantially simultaneously with the cooling system. More specifically, the CFD tool may be utilized to substantially continuously vary the operation of the cooling system to operate according to the heat loads generated in the racks. In this regard, the anticipated or actual heat loads (e.g., based upon the power draw of the components) on the racks may be inputted into the CFD tool, along with one or more of the following properties: velocity of the cooling fluid flowing through various sections of the room and the distribution of temperature and pressure of the cooling fluid in the data center, to determine an optimal manner in which, for example, the HEU's may be operated. The velocity of the air flow as well as other atmospheric conditions at various locations within the room may be sensed by a temperature sensor. The sensed conditions may be transmitted or otherwise relayed to the CFD tool to enable the tool to perform the necessary calculations.

In this regard, the CFD tool may be implemented to produce a numerical model of the room to thus determine an optimized cooling distribution within the room. A correlation of one or more of the following properties: velocity of the cooling fluid flowing through various sections of the room, distribution of temperature and pressure of the cooling fluid in the room, and the power draw into the racks, may be created based on the numerical modeling. The correlation may be used to infer thermal conditions throughout the room when only a minimum number of sensors are available during operation of the cooling system. In addition, the correlation may substantially reduce the amount of time required for the CFD tool to perform the computing operations.

By virtue of certain embodiments of the present invention, one of ordinary skill in the art will readily recognize that the amount of energy, and thus the costs associated with cooling the racks located within a room may be substantially reduced. In one respect, by operating the cooling system to supply cooling fluid substantially only as needed by the racks, the cooling system may be operated at a relatively more efficient manner in comparison with conventional cooling systems.

What has been described and illustrated herein is a preferred embodiment of the invention along with some of its variations. The terms, descriptions and figures used herein are set forth by way of illustration only and are not meant as limitations. Those skilled in the art will recognize that many variations are possible within the spirit and scope of the invention, which is intended to be defined by the following claims—and their equivalents—in which all terms are meant in their broadest reasonable sense unless otherwise indicated.

What is claimed is:

1. A method for cooling a room configured to house a plurality of computer systems, said method comprising:

providing a plurality of heat exchanger units configured to receive air from said room and to deliver air to said room;

supplying said plurality of heat exchanger units with cooling fluid from an air conditioning unit;

cooling said received air through heat exchange with the cooling fluid in the plurality of heat exchanger units;

sensing temperatures at one or more locations in said room;

controlling at least one of the temperature of said cooling fluid and said air delivery by said plurality of heat exchanger units to said room in response to said sensed temperatures at said one or more locations; and

wherein the step of controlling said air delivery by said plurality of heat exchanger units comprises individually manipulating a mass flow rate of the cooling fluid supplied to each of the plurality of heat exchanger units.

2. The method according to claim **1**, wherein said step of controlling at least one of a temperature of said cooling fluid and said air delivery to said room comprises varying an output of said air conditioning unit to control the temperature of said cooling fluid.

3. The method according to claim **1**, further comprising: determining whether the sensed temperatures at one or more locations in said room are within a predetermined range.

4. The method according to claim **3**, further comprising:

varying the cooling fluid temperature in response to the sensed temperatures at one or more locations in said room being outside of said predetermined range.

5. The method according to claim **4**, further comprising:

increasing said cooling fluid temperature in response to a sum of the sensed temperatures at one or more locations being below said predetermined range.

6. The method according to claim **4**, further comprising:

decreasing said cooling fluid temperature in response to a sum of the sensed temperatures at one or more locations being above said predetermined range.

7. The method according to claim **1**, wherein the step of manipulating a mass flow rate of the cooling fluid supplied to each of the plurality of heat exchanger units further comprises metering the flow of cooling fluid through each of said plurality of heat exchanger units with a plurality of valves positioned along respective cooling fluid lines configured to channel cooling fluid from the air conditioning unit to the plurality of heat exchanger units.

8. The method according to claim **1**, wherein the step of manipulating a mass flow rate of the cooling fluid supplied

to each of the plurality of heat exchanger units further comprises metering the flow of cooling fluid through said plurality of heat exchanger units with a plurality of pumps positioned along respective cooling fluid lines configured to channel cooling fluid from the air conditioning unit to the plurality of heat exchanger units.

9. The method according to claim **1**, further comprising:

manipulating a mass flow rate of the cooling fluid supplied to the plurality of heat exchanger units in substantially independent manners with respect to each of the plurality of heat exchanger units.

10. A system for cooling a room containing one or more computer systems, said one or more computer systems being housed in a plurality of racks, said system comprising:

a plurality of heat exchanger units configured to receive cooling fluid through a cooling fluid line from an air conditioning unit for cooling the cooling fluid, said plurality of heat exchanger units being further configured to receive air through openings in the plurality of heat exchanger units, wherein said air is cooled through heat transfer with said cooling fluid in the plurality of heat exchanger units;

said plurality of heat exchanger units having at least one fan configured to cause air to flow into and flow out of the heat exchanger unit;

a heat exchanger controller operable to control a supply of said cooling fluid to said plurality of heat exchanger units and operable to control the speed of the at least one fan;

one or more temperature sensors for sensing temperatures at one or more locations in the room;

an air conditioning unit controller configured to operate the air conditioning unit to vary the temperature of said cooling fluid delivered to the one or more locations in the room; and

a plurality of pumps configured to control cooling fluid delivery to respective ones of said plurality of heat exchanger units, wherein said heat exchanger controller is operable to control said plurality of pumps to thereby individually control the mass flow rate of cooling fluid delivered into each of the respective heat exchanger units.

11. The system according to claim **10**, further comprising one or more temperature sensors, wherein said heat exchanger controller is configured to receive environmental condition information from said one or more temperature sensors.

12. The system according to claim **10**, wherein said cooling device comprises at least one of a variable capacity compressor, a heat exchanger, a chiller, and a cooling device controller configured to control said at least one of said variable capacity compressor, said heat exchanger, and said chiller.

13. The system according to claim **10**, wherein said heat exchanger controller is operable to control said plurality of pumps to supply cooling fluid to the plurality of heat exchanger units in substantially independent manners with respect to each of the plurality of heat exchanger units.

14. A system for cooling a room containing one or more computer systems, said system comprising:

a plurality of heat exchanger units configured to receive cooling fluid through a cooling fluid line from an air conditioning unit for cooling the cooling fluid, said plurality of heat exchanger units being further configured to receive air through openings in the plurality of heat exchanger units, wherein said air is cooled through heat transfer with said cooling fluid in the plurality of heat exchanger units;

said plurality of heat exchanger units having at least one fan configured to cause air to flow into and flow out of the plurality of heat exchanger units;

a heat exchanger controller operable to control a supply of said cooling fluid to said plurality of heat exchanger units and operable to control the speed of the at least one fan;

one or more temperature sensors for sensing temperatures at one or more locations in the room;

an air conditioning unit controller configured to operate the air conditioning unit to vary the temperature of said cooling fluid delivered to the one or more locations in the room; and

a plurality of valves configured to meter the flow of cooling fluid through each of said plurality of heat exchanger units positioned along respective cooling fluid lines generally upstream of respective heat exchanger units, wherein said heat exchanger controller is operable to individually control the mass flow rate of said cooling fluid through said plurality of valves.

15. The system according to claim **14**, wherein said heat exchanger controller is operable to control the mass flow rate of said cooling fluid through a plurality of heat exchanger units in a substantially independent manner with respect to each of the plurality of heat exchanger units.

16. A system for cooling computer systems housed in one or more racks, said racks being maintained in a room, said system comprising:

means for receiving air from the room, said means for receiving air being located at a plurality of locations of the room;

means for cooling the received air in the plurality of means for receiving air, said plurality of means for cooling including means for receiving cooling fluid from an air conditioning unit;

means for delivering cooled air to said computer systems;

means for measuring temperatures at one or more locations in said room;

means for controlling delivery of said cooled air through said means for delivering cooled air in response to the temperature measurements;

means for controlling the temperature of said cooling fluid; and

means for individually manipulating a mass flow rate of the cooling fluid supplied to the plurality of means for receiving air, wherein the means for individually manipulating varies the mass flow rate of cooling fluid supplied to each of the plurality of means for receiving air in substantially independent manners.

17. The system according to claim **16**, further comprising:

means for controlling delivery of cooling fluid through said cooling means.

18. The system according to claim **16**, further comprising:

means for metering the flow of cooling fluid through said means for receiving air, said means for metering being positioned along respective cooling fluid lines configured to channel cooling fluid from the air conditioning unit to respective ones of the means for receiving air.

19. The system according to claim **16**, further comprising:

means for manipulating the mass flow rate of cooling fluid supplied to a plurality of means for receiving air in a substantially independent manner with respect to each of the plurality of means for receiving air.

20. A computer readable storage medium on which is embedded one or more computer programs, said one or more

computer programs implementing a method for cooling a room configured to house a plurality of computer systems, said one or more computer programs comprising a set of instructions for:

supplying a plurality of heat exchanger unit configured to receive air from the room and to deliver air to the room with cooling fluid from an air conditioning unit;

cooling said received air through heat exchange with the cooling fluid in the plurality of heat exchanger units;

sensing temperatures at one or more locations in said room;

controlling at least one of the temperature of said cooling fluid and said air delivery by said plurality of heat exchanger units to said room in response to said sensed temperatures at said one or more locations; and

individually manipulating a mass flow rate of the cooling fluid supplied to the each of the plurality of heat exchanger units.

21. The computer readable storage medium according to claim **20**, said one or more computer programs further comprising a set of instructions for:

metering the flow of cooling fluid through said plurality of heat exchanger units with a valve positioned along respective cooling fluid lines configured to channel cooling fluid from the air conditioning unit to the plurality of heat exchanger units.

22. The computer readable storage medium according to claim **20**, said one or more computer programs further comprising a set of instructions for:

manipulating the mass flow rate of cooling fluid supplied to a plurality of heat exchanger units in a substantially independent manner with respect to each of the plurality of heat exchanger units.

* * * * *

Exhibit 6

US006862179B2

(12) **United States Patent**
Beitelmal et al.

(10) **Patent No.: US 6,862,179 B2**
(45) **Date of Patent: Mar. 1, 2005**

(54) **PARTITION FOR VARYING THE SUPPLY OF COOLING FLUID**

(75) Inventors: **Abdlmonem H. Beitelmal**, Sacramento, CA (US); **Chandrakant D. Patel**, Fremont, CA (US)

(73) Assignee: **Hewlett-Packard Development Company, L.P.**, Houston, TX (US)

(*) Notice: Subject to any disclaimer, the term of this patent is extended or adjusted under 35 U.S.C. 154(b) by 140 days.

(21) Appl. No.: **10/303,761**

(22) Filed: **Nov. 26, 2002**

(65) **Prior Publication Data**

US 2004/0109288 A1 Jun. 10, 2004

(51) **Int. Cl.**[7] **G06F 1/16**

(52) **U.S. Cl.** **361/687**; 62/259.2; 454/195; 361/697

(58) **Field of Search** 361/679–687, 361/724–727, 695–697; 62/259.2, 186, 192, 81; 454/195; 312/223.1–223.3

(56) **References Cited**

U.S. PATENT DOCUMENTS

5,177,666 A * 1/1993 Bland et al. 361/689
5,209,073 A 5/1993 Thomas et al. 62/81
5,377,498 A 1/1995 Cur et al. 62/197
5,899,083 A 5/1999 Peterson et al. 62/186
6,079,626 A 6/2000 Hartman 236/13
6,305,180 B1 * 10/2001 Miller et al. 62/259.2
6,402,613 B1 6/2002 Teagle 454/195
6,668,565 B1 * 12/2003 Johnson et al. 62/89
6,694,759 B1 * 2/2004 Bash et al. 62/180

* cited by examiner

Primary Examiner—Hung Van Duong

(57) **ABSTRACT**

In a data center, a plurality of racks are cooled by activating a cooling device and opening a controllable partition configured to vary a supply of cooling fluid within a zone of the data center. The zone includes at least one associated rack of the plurality of racks. In addition, the temperature of at least one associated rack is sensed and it is determined whether the sensed temperature is within a predetermined temperature range. Furthermore, the controllable partition is manipulated to vary the supply of the cooling fluid to the zone in response to the sensed temperature being outside the predetermined temperature range.

41 Claims, 8 Drawing Sheets

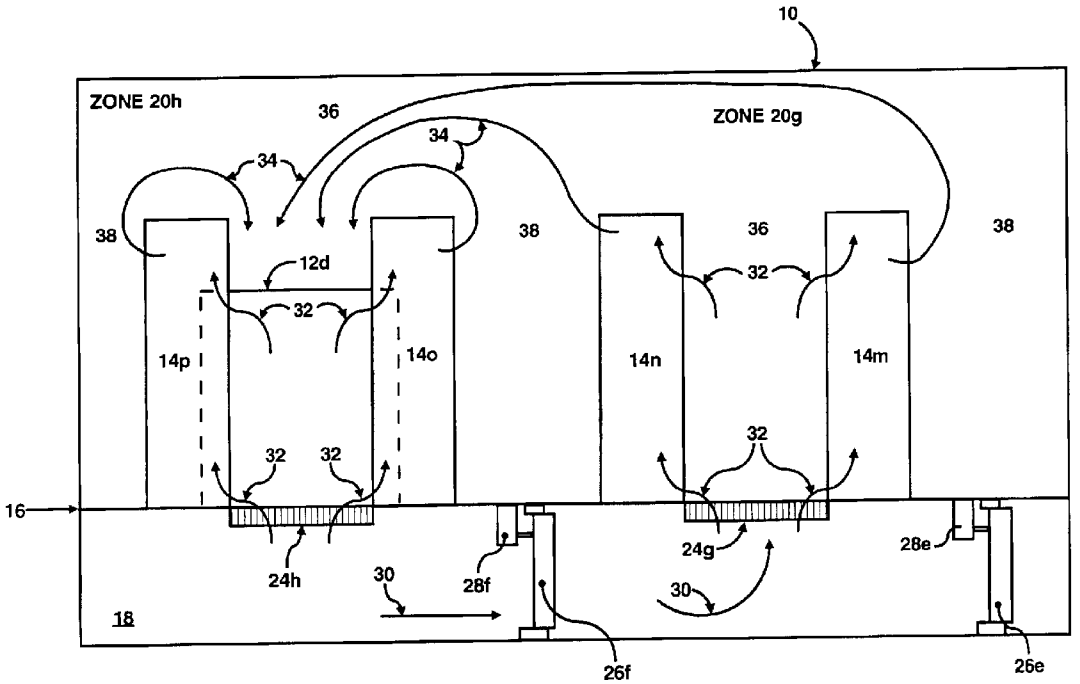

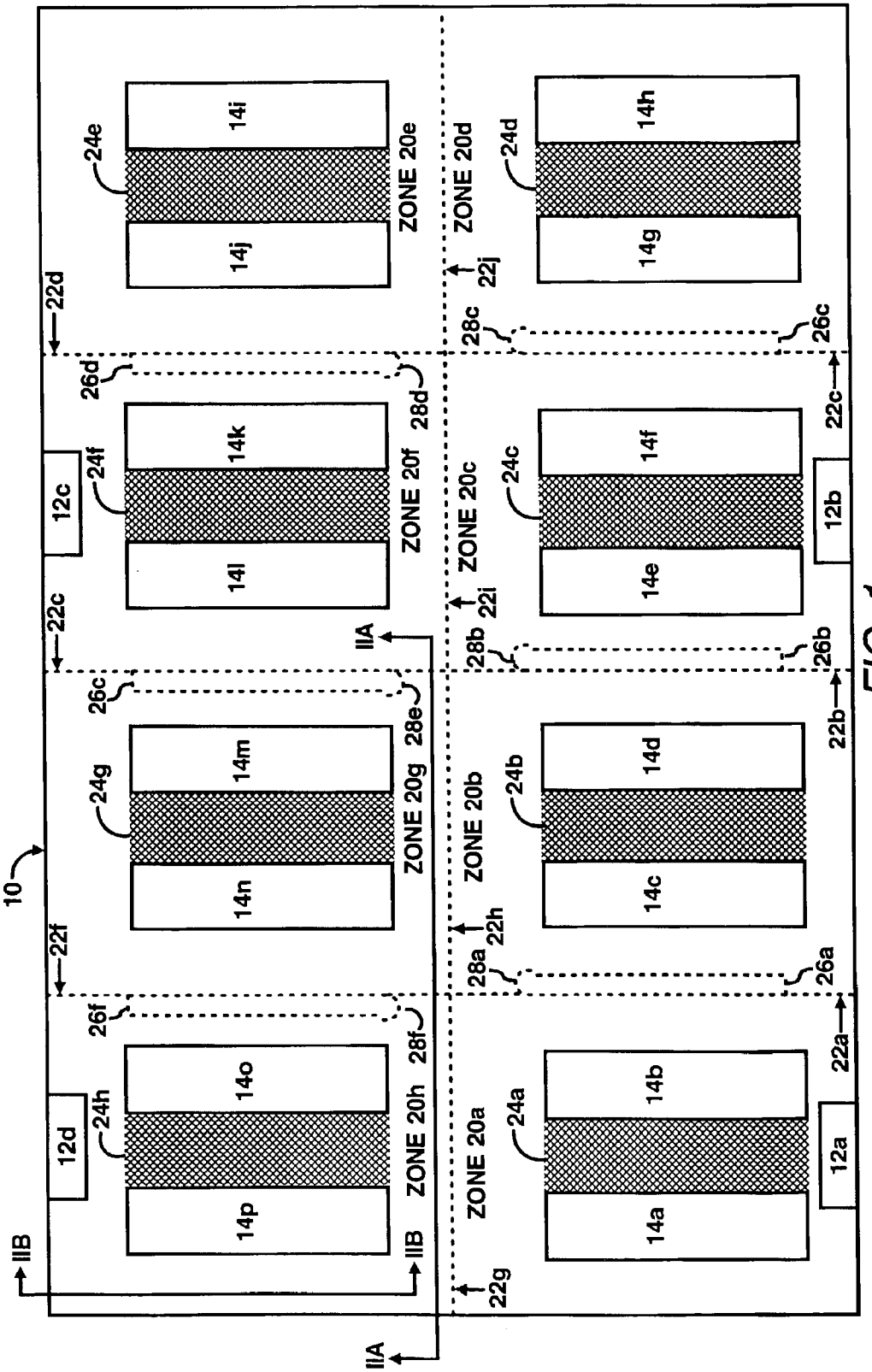
10
12a
12b
12c
12d
14a
14b
14c
14d
14e
14f
14g
14h
14i
14j
14k
14l
14m
14n
14o
14p
ZONE 20a
ZONE 20b
ZONE 20c
ZONE 20d
ZONE 20e
ZONE 20f
ZONE 20g
ZONE 20h
22a
22b
22c
22d
22f
22g
22h
22i
22j
24a
24b
24c
24d
24e
24f
24g
24h
26a
26b
26c
26d
26f
28a
28b
28c
28d
28e
28f
IIA
IIB

FIG. 1

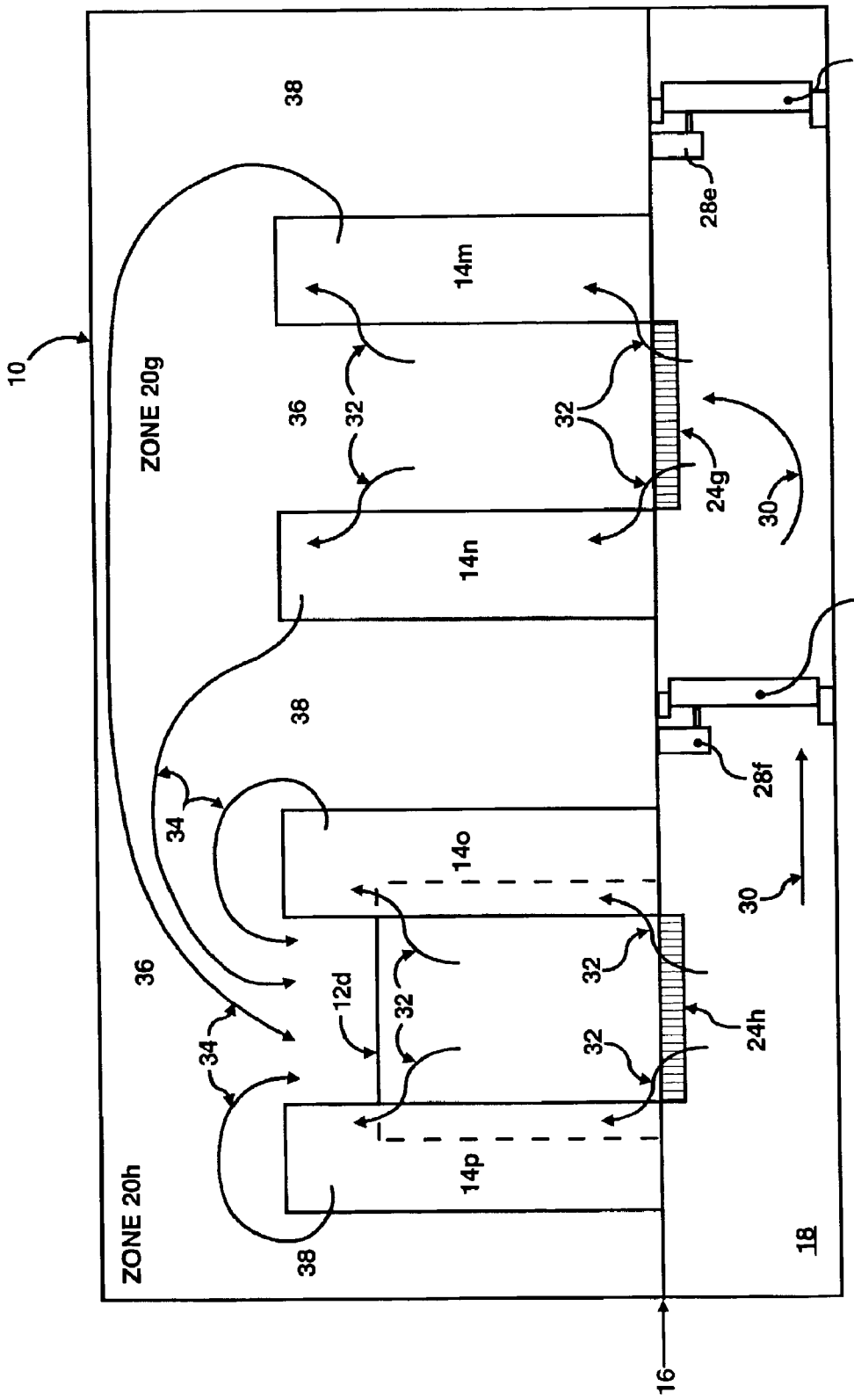
10
ZONE 20g
ZONE 20h
38
36
34
32
12d
14m
14n
14o
14p
24g
24h
28e
28f
26e
26f
30
18
16

FIG. 2A

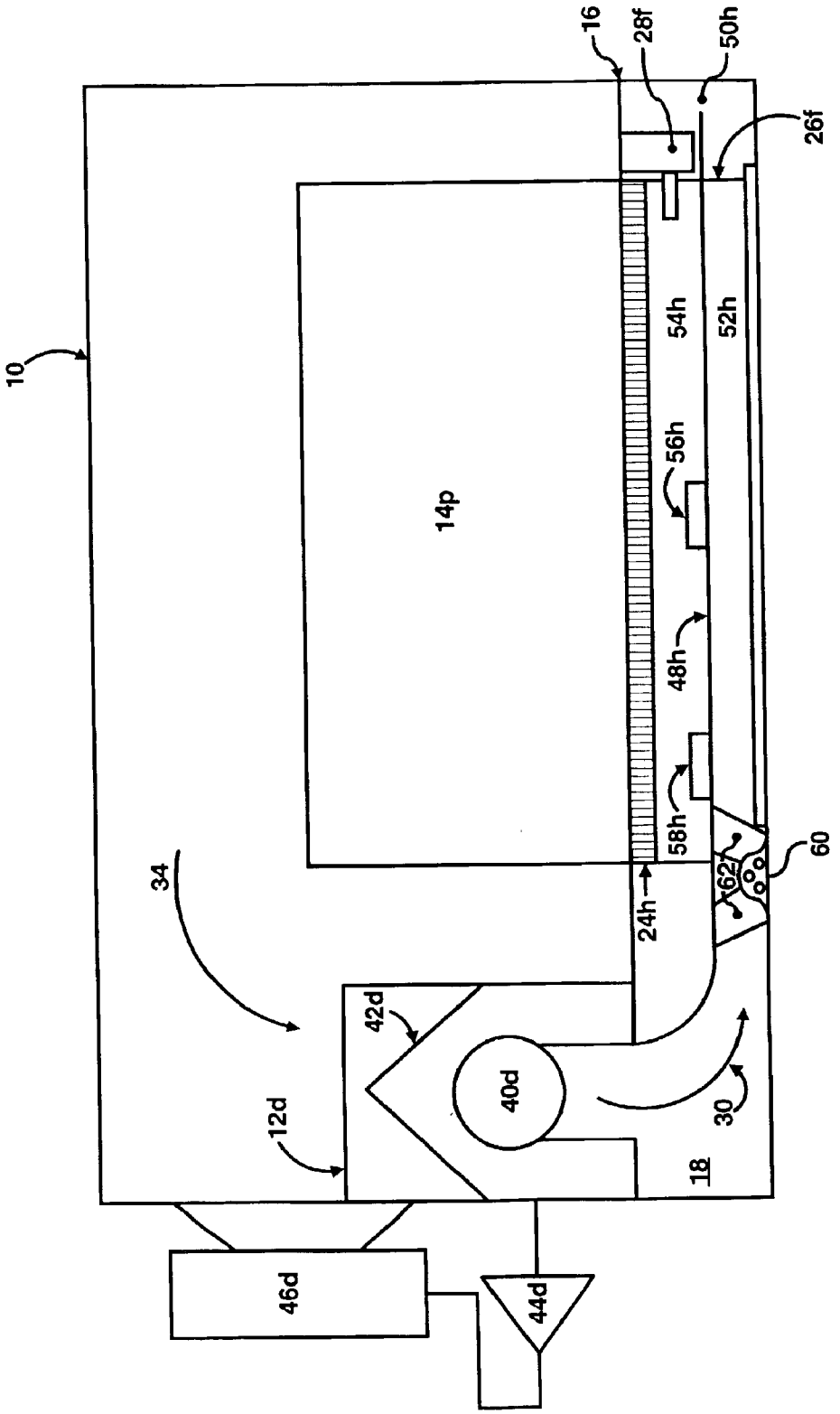
10
16
28f
50h
26f
54h
52h
14p
56h
48h
58h
60
62
24h
34
42d
40d
12d
30
18
46d
44d

FIG. 2B

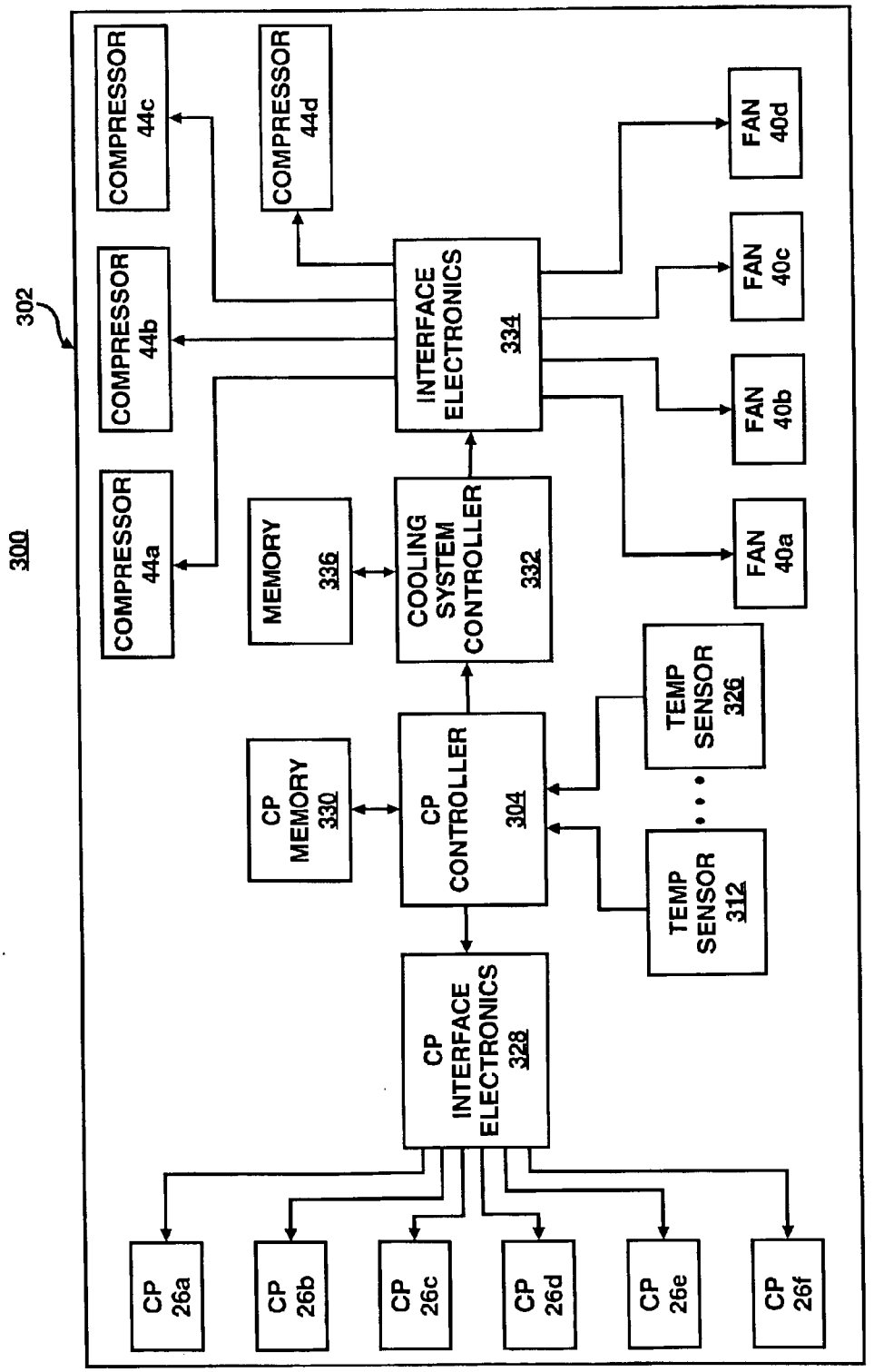
300
302
COMPRESSOR 44a
COMPRESSOR 44b
COMPRESSOR 44c
COMPRESSOR 44d
MEMORY 336
COOLING SYSTEM CONTROLLER 332
INTERFACE ELECTRONICS 334
FAN 40a
FAN 40b
FAN 40c
FAN 40d
CP MEMORY 330
CP CONTROLLER 304
TEMP SENSOR 312
TEMP SENSOR 326
CP INTERFACE ELECTRONICS 328
CP 26a
CP 26b
CP 26c
CP 26d
CP 26e
CP 26f

FIG. 3A

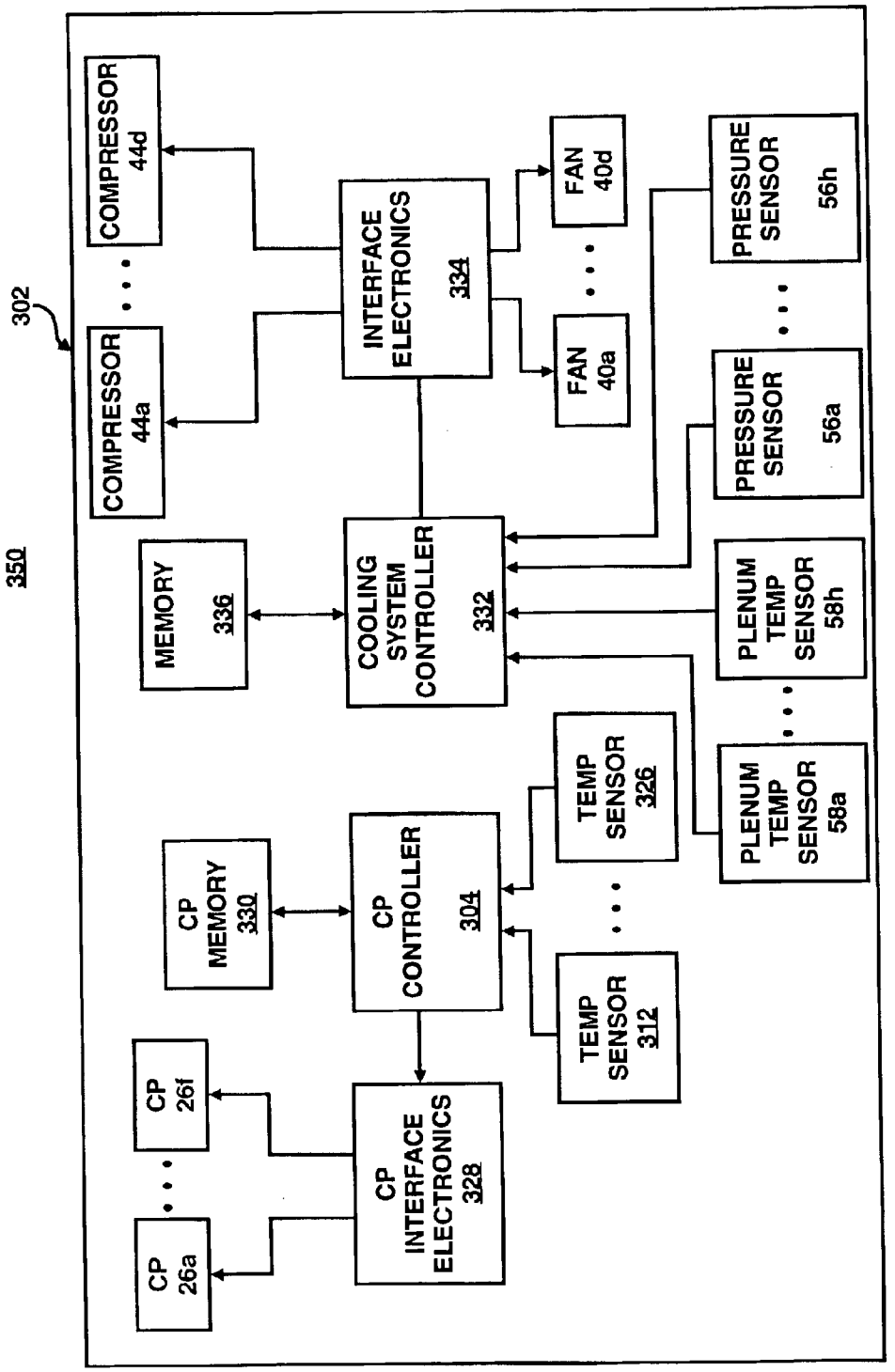
350
302
COMPRESSOR 44a
COMPRESSOR 44d
MEMORY 336
INTERFACE ELECTRONICS 334
COOLING SYSTEM CONTROLLER 332
FAN 40a
FAN 40d
PRESSURE SENSOR 56a
PRESSURE SENSOR 56h
PLENUM TEMP SENSOR 58a
PLENUM TEMP SENSOR 58h
CP MEMORY 330
CP CONTROLLER 304
TEMP SENSOR 312
TEMP SENSOR 326
CP INTERFACE ELECTRONICS 328
CP 26a
CP 26f

FIG. 3B

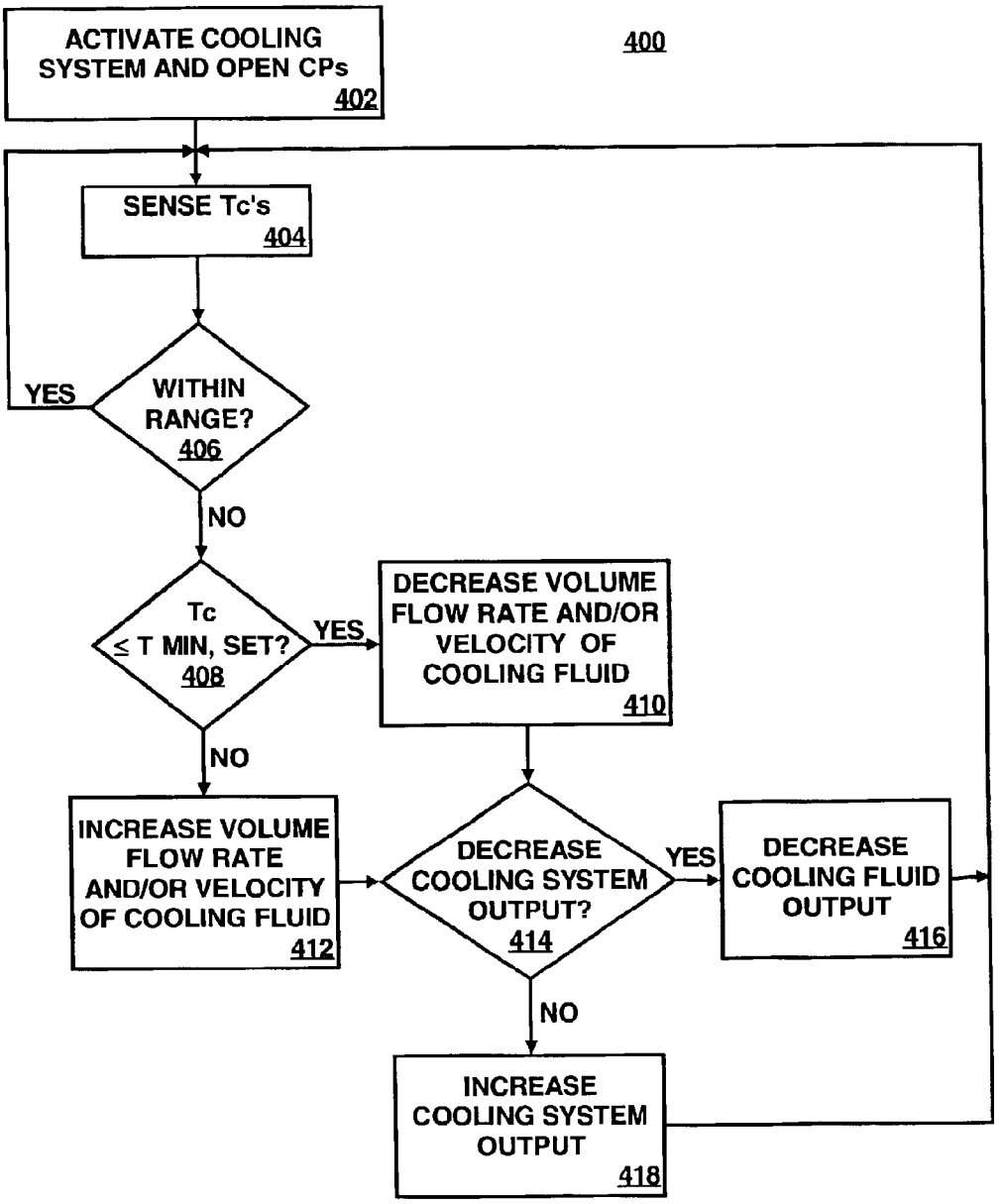
400
ACTIVATE COOLING SYSTEM AND OPEN CPs
402
SENSE Tc's
404
WITHIN RANGE?
406
YES
NO
Tc ≤ T MIN, SET?
408
YES
NO
DECREASE VOLUME FLOW RATE AND/OR VELOCITY OF COOLING FLUID
410
INCREASE VOLUME FLOW RATE AND/OR VELOCITY OF COOLING FLUID
412
DECREASE COOLING SYSTEM OUTPUT?
414
YES
NO
DECREASE COOLING FLUID OUTPUT
416
INCREASE COOLING SYSTEM OUTPUT
418

FIG. 4A

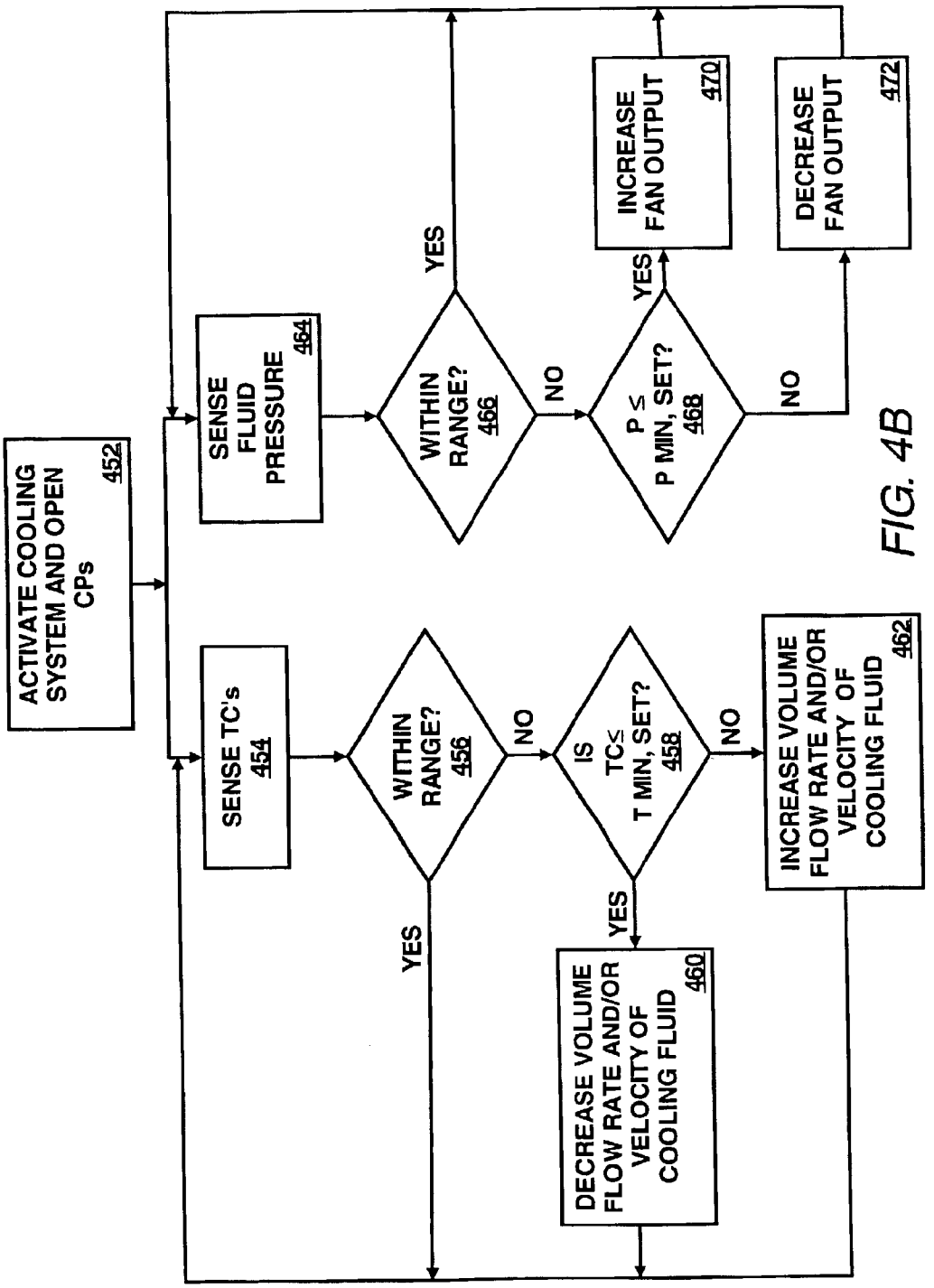
ACTIVATE COOLING SYSTEM AND OPEN CPs
452
SENSE TC's
454
WITHIN RANGE?
456
YES
NO
IS TC≤ T MIN, SET?
458
YES
NO
DECREASE VOLUME FLOW RATE AND/OR VELOCITY OF COOLING FLUID
460
INCREASE VOLUME FLOW RATE AND/OR VELOCITY OF COOLING FLUID
462
SENSE FLUID PRESSURE
464
WITHIN RANGE?
466
YES
NO
P ≤ P MIN, SET?
468
YES
NO
INCREASE FAN OUTPUT
470
DECREASE FAN OUTPUT
472

FIG. 4B

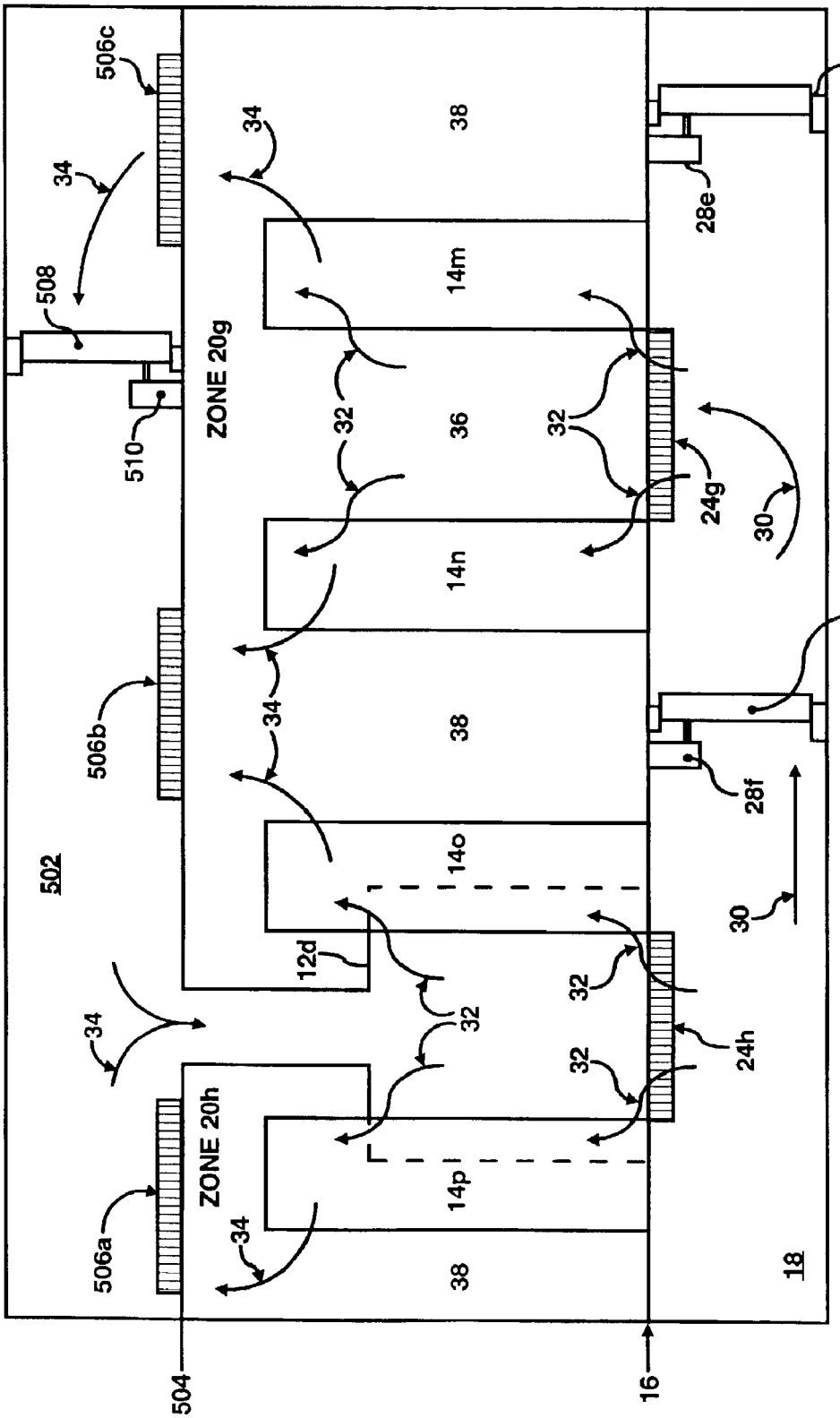
506c
34
508
510
ZONE 20g
506b
502
506a
ZONE 20h
504
16
18
38
14m
36
14n
14o
14p
12d
32
24g
24h
30
26e
28e
26f
28f

FIG. 5

PARTITION FOR VARYING THE SUPPLY OF COOLING FLUID

BACKGROUND

A data center may be defined as a location, e.g., room, that houses numerous printed circuit (PC) board electronic systems arranged in a number of racks. A standard rack may be defined as an Electronics Industry Association (EIA) enclosure, 78 in. (2 meters) wide, 24 in. (0.61 meter) wide and 30 in. (0.76 meter) deep. Standard racks may be configured to house a number of PC boards, e.g., about forty (40) boards, with future configurations of racks being designed to accommodate up to eighty (80) boards. The PC boards typically include a number of components, e.g., processors, micro-controllers, high speed video cards, memories, semi-conductor devices, and the like, that dissipate relatively significant amounts of heat during the operation of the respective components. For example, a typical PC board comprising multiple microprocessors may dissipate approximately 250 W of power. Thus, a rack containing forty (40) PC boards of this type may dissipate approximately 10 KW of power.

The power required to remove the heat dissipated by the components in the racks is generally equal to about 10 percent of the power needed to operate the components. However, the power required to remove the heat dissipated by a plurality of racks in a data center is generally equal to about 50 percent of the power needed to operate the components in the racks. The disparity in the amount of power required to dissipate the various heat loads between racks and data centers stems from, for example, the additional thermodynamic work needed in the data center to cool the air. In one respect, racks are typically cooled with fans that operate to move cooling fluid, e.g., air, across the heat dissipating components; whereas, data centers often implement reverse power cycles to cool heated return air. The additional work required to achieve the temperature reduction, in addition to the work associated with moving the cooling fluid in the data center and the condenser, often add up to the 50 percent power requirement. As such, the cooling of data centers presents problems in addition to those faced with the cooling of racks.

Conventional data centers are typically cooled by operation of one or more air conditioning units. The compressors of the air conditioning units typically require a minimum of about thirty (30) percent of the required cooling capacity to sufficiently cool the data centers. The other components, e.g., air movers (fans), etc., typically require an additional twenty (20) percent of the required cooling capacity. As an example, a high density data center with 100 racks, each rack having a maximum power dissipation of 10 KW, generally requires 1 MW of cooling capacity. Air conditioning units with a capacity of 1 MW of heat removal generally requires a minimum of 300 KW input compressor power in addition to the power needed to drive the air moving devices, e.g., fans, blowers, etc. Conventional data center air conditioning units do not vary their cooling fluid output based on the distributed needs of the data center. Instead, these air conditioning units generally operate at or near a maximum compressor power even when the heat load is reduced inside the data center.

The substantially continuous operation of the air conditioning units is generally designed to operate according to a worst-case scenario. That is, cooling fluid is supplied to the components at around 100 percent of the estimated cooling

requirement. In this respect, conventional cooling systems often attempt to cool components that may not be operating at a level which may cause its temperature to exceed a predetermined temperature range. In addition, conventional cooling systems generally supply cooling fluid to the components in an inefficient manner and substantially indiscriminate manner. That is, conventional cooling systems typically have plenums which may not vary the volume flow of cooling fluid according to fluctuations in the cooling requirements. Consequently, conventional cooling systems often incur greater amounts of operating expenses than may be necessary to sufficiently cool the heat generating components contained in the racks of data centers.

SUMMARY

According to one embodiment, the invention pertains to a method of cooling a plurality of racks in a data center. In this method, a cooling device is activated and a controllable partition configured to vary a supply of cooling fluid within a zone of the data center is opened. The zone includes at least one associated rack of the plurality of racks. In addition, the temperature of at least one associated rack is sensed and it is determined whether the sensed temperature is within a predetermined temperature range. Furthermore, the controllable partition is manipulated to vary the supply of the cooling fluid to the zone in response to the sensed temperature being outside the predetermined temperature range.

BRIEF DESCRIPTION OF THE DRAWINGS

Embodiments of the invention are illustrated by way of example and not limitation in the accompanying figures in which like numeral references refer to like elements, and wherein:

FIG. **1** shows a simplified schematic illustration of a data center containing a cooling system in accordance with an embodiment of the invention;

FIG. **2**A shows a simplified schematic cross-sectional side view along lines IIA—IIA of FIG. **1** in accordance with an embodiment of the invention;

FIG. **2**B shows a simplified schematic cross-sectional side view along lines IIB—IIB of FIG. **1** in accordance with an embodiment of the invention;

FIGS. **3**A and **3**B each illustrate a block diagram of a control scheme for a cooling system according to various embodiments of the invention;

FIGS. **4**A and **4**B each show a flow diagram of a manner in which embodiments of the invention may be practiced; and

FIG. **5** shows a simplified schematic cross-sectional side view along lines IIA—IIA of FIG. **1** in accordance with another embodiment of the invention.

DETAILED DESCRIPTION

For simplicity and illustrative purposes, the principles of the invention are described by referring mainly to an embodiment thereof. In the following description, numerous specific details are set forth in order to provide a thorough understanding of the invention. It will be apparent however, to one of ordinary skill in the art, that the invention may be practiced without limitation to these specific details. In other instances, well known methods and structures have not been described in detail so as not to unnecessarily obscure the invention.

According to an embodiment of the invention, a cooling system is configured to adjust cooling fluid (e.g., air, other

gasses, liquid, etc.) flow to and/or from various racks located throughout a data center, e.g., a location that houses numerous printed circuit (PC) board electronic systems arranged in a number of racks, based upon the detected or anticipated temperatures at various locations throughout the data center. In one respect, by substantially increasing the cooling fluid flow to those racks dissipating greater amounts of heat and by substantially decreasing the cooling fluid flow to and/or from those racks dissipating lesser amounts of heat, the amount of energy required to operate the cooling system may be relatively reduced.

More specifically, by modifying the volume flow rate of cooling fluid from a plenum (e.g., supply plenum, return plenum, etc.) of the cooling system, an area of the data center may receive cooling capacity commensurate with the heat load dissipated within that area. In this regard, the volume flow rate of the cooling fluid is dependent upon the cross sectional area through which the fluid is flowing and the forces of pressure being exerted upon the fluid. Furthermore, by dynamically controlling the flow of cooling fluid with respect to the plenum (e.g., into, within, and out of), the ability to respond to various cooling demands may be maintained. Thus, instead of operating the devices, e.g., compressors, fans, etc., of the cooling system at substantially 100 percent of the anticipated heat dissipation from the racks, those devices may be operated in a more efficient manner. In addition, the racks may be positioned throughout the data center according to their anticipated heat loads to thereby enable computer room air conditioning (CRAC) units located at various positions throughout the data center to operate in a more efficient manner. In another respect, the positioning of the racks may be determined through implementation of modeling and metrology of the cooling fluid flow throughout the data center. In addition, the numerical modeling may be implemented to determine the volume flow rate and velocity of the cooling fluid flow through each of the one or more plenums. Furthermore, the numerical modeling may be implemented to determine the volume flow rate and velocity of the cooling fluid flow through supply and/or return vents.

FIG. **1** shows a simplified schematic illustration of a floor plan for a data center **10** containing a plurality of cooling systems **12***a*–**12***d*. The cooling systems **12***a*–**12***d* are operable to maintain a plurality of racks **14***a*–**14***p* within a predetermined temperature range. Although not explicitly shown in FIG. **1**, the data center **10**, according to this embodiment of the invention, includes a raised floor **16** (See FIG. **2**A). A pressurized enclosure **18** (See FIG. **2**A) is located beneath the raised floor **16**. Although the data center **10** is illustrated in FIG. **1** as containing sixteen racks **14***a*–**14***p* and four cooling systems **12***a*–**12***d*, it should be understood that the data center may include any number of racks, e.g., 100 racks, and cooling systems, e.g., one or more. Therefore, sixteen racks are for illustrative and simplicity of description purposes only and are not intended to limit the invention in any respect.

The racks **14***a*–**14***p* generally house a plurality of components (not shown), e.g., processors, micro-controllers, high speed video cards, memories, semi-conductor devices, and the like. The components may be elements of a plurality of subsystems (not shown), e.g., computers, servers, etc. The subsystems and the components may be implemented to perform various electronic, e.g., computing, switching, routing, displaying, and the like, functions. In the performance of these electronic functions, the components, and therefore the subsystems, generally dissipate relatively large amounts of heat. Because racks **14***a*–**14***p* have been generally known to include upwards of forty (40) or more subsystems, they may require substantially large amounts of cooling fluid to maintain the subsystems and the components generally within a predetermined operating temperature range. According to an embodiment of the invention, by substantially controlling the amount of cooling fluid delivered to the components and the subsystems located in the racks **14***a*–**14***p* based upon their respective heat loads, the power consumed by the cooling systems **12***a*–**12***d* to supply the cooling fluid may also be controlled.

In order to control the amount of cooling fluid delivered to the components and the subsystems located in the racks **14***a*–**14***p* based upon their respective heat loads, the pressurized enclosure **18** may be subdivided into a plurality of zones **20***a*–**20***h* by a plurality of partitions **22***a*–**22***j* (e.g., barriers, walls, etc.). In addition, according to an embodiment of the invention, the pressurized enclosure **18** may be configured to function as a plenum. In this regard, cooling fluid may enter the pressurized enclosure **18** below the cooling systems **12***a*–**12***d* and exit the pressurized enclosure **18** through a plurality of vents **24***a*–**24***h*. Furthermore, a plurality of controllable partitions ("CPs") **26***a*–**26***f* may be configured to control cooling fluid movement between the zones **20***a*–**20***h*. In various embodiments of the invention, the CPs **26***a*–**26***f* may include louvered, rotating and/or retractable partitions. Each of the CPs **26***a*–**26***f* may include a respective motor **28***a*–**28***f*. However, it is to be understood that any suitable actuating device may be substituted for some or all of the motors **28***a*–**28***f*. Examples of reasonable actuating devices include, but are not limited to, electromagnetic, pneumatic, and like devices.

In addition, although CPs are not shown in all of the partitions **22***a*–**22***j*, it is within the scope of the invention that some or all of the partitions **22***a*–**22***j* may include at least one controllable partition. Furthermore, although in the above description of the data center **10**, the raised floor **16** is mentioned, it is within the scope of the invention that a lowered ceiling and/or the raised floor **16** may be included in the data center.

In the following description, the operation of a subset of the cooling systems **12***a*–**12***d* are shown for simplicity and illustrative purposes. In particular, the operation of the cooling system **12***d* is discussed by way of example for the operation of cooling systems **12***a*–**12***d*.

FIG. **2**A shows a simplified schematic cross-sectional side view along lines IIA—IIA of FIG. **1** containing zones **20***g* and **20***h* in accordance with an embodiment of the invention. Although not shown in FIG. **2**A (See FIG. **2**B), the cooling system **12***d* may include a fan for supplying cooling fluid into the pressurized enclosure **18** (e.g., plenum). In this manner, as indicated by the arrow **30**, the cooling system **12***d* may supply cooling fluid into the pressurized enclosure **18**. Air is supplied into the cooling system **12***d* from the returned cooling fluid in the data center **10** as indicated by arrows **34**. In operation, the returned cooling fluid enters into the cooling system **12***d* as indicated by arrows **34** and is cooled by operation of various well know components of a cooling system (e.g., cooling coil, compressor, condenser, chilled water heat exchange, etc.) and/or in any reasonably suitable manner generally known to those of ordinary skill in the art. In addition, based upon the cooling fluid needed by the heat loads in the racks **14***m*–**14***p*, the cooling system **12***d* may be operated at various levels. For example, the capacity (e.g., the amount of work exerted on the refrigerant) of the compressor and the speed of the fan may both be modified to thereby control the temperature and the amount of cooling fluid flow delivered to the racks **14***m*–**14***p*. In this

respect, the compressor may be a variable capacity compressor and the fan may be a variable speed fan.

As the cooling fluid flows from the cooling system **12***d* and into the pressurized enclosure **18** as indicated by the arrow **30**, the flow of cooling fluid may be controlled by the CP **26***f*. In one respect, the velocity and the volume flow rate of the cooling fluid may be regulated by varying the shape and/or opening size of the CP **26***f*. Thus, according to this embodiment of the invention, the zones **20***h* and **20***g* may receive substantially individualized and localized amounts of cooling fluid according to the heat loads of the respective racks **14***m*–**14***p* within each zone **20***h* and **20***g*. For example, if the racks **14***m* and **14***n* in zone **20***g* are generating relatively little heat load as compared to racks **14***o* and **14***p* in zone **20***h*, the CP **26***f* may be controlled to reduce the velocity and/or volume flow rate of the cooling fluid being conveyed therethrough. In this manner, the volume flow rate of cooling fluid available to flow through the vents **24***h* and **24***g* may be modified.

The arrows **32** indicate the general direction of travel of the cooling fluid into the racks **14***m*–**14***p* and the arrows **34** indicate the general direction of travel of fluid heated by the heat dissipating components located within the racks **14***m*–**14***p*. As may be seen in FIG. **2**A, the areas between the racks **14***m*–**14***p* may comprise either cool aisles **36** or hot aisles **38**, or a combination thereof. The cool aisles **36** are those aisles that include the vents **24***g* and **24***h* and thus receive cooling fluid for delivery to the racks **14***m*–**14***p*. The hot aisles **38** are those aisles that receive air heated by the heat dissipating components in the racks **14***m*–**14***p*.

In addition to controlling the flow of cooling fluid by controlling the CP **26***f*, it is within the scope of the invention that flow of cooling fluid may also be controlled by the manipulation of dynamically controllable vents. In this regard, the vents **24***h* and **24***g* may be dynamically controllable vents and may be operated to control the velocity and the volume flow rate of the cooling fluid therethrough. Furthermore, various sections of each of the racks **14***m*–**14***p* may also receive substantially individualized amounts of cooling fluid. By way of example, if the bottom halves of the racks **14***m* and **14***n* are operating at maximum power, thereby dissipating a maximum level of heat load, and the upper halves are operating at little or no power, the vent **24***g* may be configured to enable cooling fluid flow therethrough to have a relatively high volume flow rate with a relatively low velocity. In this manner, the cooling fluid may operate to generally supply greater cooling to the lower halves of the racks **14***m* and **14***n*, whereas the upper halves may receive relatively lesser amounts of cooling fluid. In addition, if the upper halves of the racks **14***o* and **14***p* are operating at approximately 50 percent of their maximum power, and the lower halves are operating at little or no power, the vent **24***h* may be configured to enable cooling fluid flow therethrough to have a relatively low volume flow rate with a relatively high velocity. In this manner, the cooling fluid flow may have sufficient momentum to adequately reach and cool the upper halves of the racks **14***o* and **14***p*. In one respect, therefore, the amount of energy consumed by the cooling system **12***d* in maintaining the racks **14***m*–**14***p* at a predetermined temperature range may be substantially reduced in comparison with conventional data center cooling systems.

A more detailed description of the above-described embodiment may be found in co-pending U.S. application Ser. No. 09/970,707, filed Oct. 5, 2001, which is assigned to the assignee of the present invention and is incorporated by reference herein in its entirety.

In the following description, the operation of a subset of the cooling systems **12***a*–**12***d* is shown for simplicity and illustrative purposes.

FIG. **2**B shows a simplified schematic cross-sectional side view along lines IIB—IIB of FIG. **1** containing zone **20***h* in accordance with an embodiment of the invention. The cooling system **12***d* generally includes a fan **40***d* for supplying cooling fluid (e.g., air) into the pressurized enclosure **18**. Air, heated in the data center **10** is supplied to the fan **40***d* as indicated by an arrow **34**. In operation, the returned cooling fluid (e.g., heated air, return air, etc.) enters into the cooling system **12** as indicated by the arrow **34** and is cooled by operation of a cooling coil **42***d*, a compressor **44***d*, and a condenser **46***d*, in any reasonably suitable manner generally known to those of ordinary skill in the art. As described hereinabove, in an embodiment of the invention, the compressor **44***d* may be a variable capacity compressor and/or the fan **40***d* may be a variable speed fan. Although a compressor **44***d* is illustrated, it is to be understood that any reasonably suitable cooling device may be implemented to cool the cooling fluid e.g., chilled water heat exchange and the like.

According to an embodiment of the invention, the cooling fluid supply for flow through the vent **24***h* may be maintained at a relatively uniform pressure. In this respect, the pressurized enclosure **18** may include a divider **48***h*. The length of the divider **48***h* may extend substantially along the entire length of pressurized enclosure **18**, i.e., in the direction generally perpendicular to the plane of FIG. **2**B. The width of the divider **48***h* may be configured to extend from the cooling system **12***d* to substantially the end of the pressurized enclosure **18** to thus create a gap **50***h* between a side edge of the divider **48***h* and a side surface of the pressurized enclosure **18**. The divider **48***h* generally divides the pressurized enclosure **18** into two relatively separate chambers **52***h*, **54***h*. The first chamber **52***h* is in fluid communication with the outlet of the fan **40***d*. The second chamber **54***h* is in fluid communication with the first chamber **54***h* substantially through the gap **50***h*. In this respect, the cooling fluid flow originating from the fan **40***d* must travel substantially the entire width of the pressurized enclosure **18**, i.e., through the first chamber **52***h*, for the fluid flow to enter into the second chamber **54***h*.

The cooling fluid in the second chamber **54***h* may be maintained at a substantially uniform static pressure by virtue of the manner in which the cooling fluid is introduced into the second chamber **54***h*. The rate at which the cooling fluid is supplied into the first chamber **52***h* by the fan **40***d* may cause a relatively large amount of turbulence in the cooling fluid located in the first chamber **52***h*. The turbulence is generally greatest at the outlet of the fan **40***d* and generally decreases as the distance from the outlet increases. By virtue of the distance the cooling fluid must travel to enter into the second chamber **54***h*, the cooling fluid may have substantially stabilized, thus enabling the cooling fluid entering into the second chamber **54***h* to be relatively calm. In this respect, the divider **48***h* operates to provide a relatively consistent cooling fluid pressure supply for the vent **24***h*.

The pressure of the cooling fluid located in the second chamber **54***h* may be measured by a pressure sensor **56***h*. In this respect, the pressure sensor **56***h* may detect any discernable changes in the pressure of the cooling fluid located within the second chamber **54***h* and relay that information to a cooling system controller (not shown). Similarly, pressure sensors **56***a*–**56***g* (not shown) may detect any discernable changes in the pressure of the cooling fluid located within the respective chambers **54***a*–**54***g* and relay that information to the cooling system controller. The cooling system controller may operate to alter the output of the fan **40***d* in

response to the detected changes in pressure. Therefore, operation of the fan **40***d* may be related to the cooling requirements of the racks **14***a* (See FIG. **2**A) and **14***p* within the zone **20***h* and thus, the amount of energy required to supply the zone **20***h* with cooling fluid may be substantially optimized. In one respect, only that amount of energy required to substantially cool the components contained in the zone **20***h* may be expended, which may correlate to a substantial energy savings over known cooling systems.

More generally, by controlling the operation of the CPs **26***a*–**26***f* (See FIG. **1**), operation of the cooling systems **12***a*–**12***d* may be related to the cooling requirements of each of the zones **20***a*–**20***h* and the amount of energy required to supply the racks **14***a*–**14***p* with cooling fluid may be substantially optimized. For example, if racks **14***i*, **14***j*, **14***o*, and **14***p* are substantially idle, the CPs **26***d* and **26***f* may be controlled to substantially stop the flow of cooling fluid, while the CP **26***e* is controlled to allow the flow of cooling fluid. In this manner, cooling system **12***d* may be essentially shut off while cooling system **12***c* is utilized to cool zones **20***f* and **20***g*. Thus, in another respect, only that amount of energy required to substantially cool the components contained within each zone **20***a*–**20***h* may be expended, which may correlate to a substantial energy savings over known cooling systems.

The capacity of the compressor **44***d* may vary according to changes in the temperature of the cooling fluid located in the second chamber **54***h*. As such, a plenum temperature sensor **58***h* may be located within the second chamber **54***h* to relay temperature measurements to the cooling system **12***d*. The plenum temperature sensor **58***h* may comprise any reasonably suitable temperature sensor known to those skilled in the art. Therefore, the compressor **44***d* may be operated to generally maintain the temperature of the cooling fluid within the second chamber **54***h* at a substantially constant level. In addition, the capacity of the compressor **44***d* may also vary according to detected and/or anticipated changes in heat loads generated in the racks **14***o* and **14***p*. As an example, the compressor **44***d* capacity may be increased as the heat loads generated in the racks **14***o* and **14***p* increase. Furthermore, as the second chambers **54***a*–**54***g* (not shown) may also include respective plenum temperature sensors **58***a*–**58***g* (not shown), the capacity of the compressors **44***a*–**44***d* (compressors **44***a*–**44***c* not shown) may also vary according to detected and/or anticipated changes in heat loads generated in the racks **14***a* and **14***p*. In this regard, the power required to operate the compressors **44***a*–**44***d* may be substantially optimized, thereby reducing the total power required to operate the cooling systems **12***a*–**12***d*.

The compressors **44***a*–**44***d* may thus be controlled to either increase or decrease the mass flow rate of a refrigerant therethrough. Because the specific type of compressors **44***a*–**44***d* and fans **40***a*–**40***d* to be employed with the embodiments of the invention may vary according to individual needs, the invention is not limited to any specific type of compressor or fan. Instead, any reasonably suitable types of compressors **44***a*–**44***d* and fans **40***a*–**40***d* that are capable of accomplishing certain aspects of the invention may be employed with the embodiments of the invention. The choice of compressors **44***a*–**44***d* and fans **40***a*–**40***d* may depend upon a plurality of factors, e.g., cooling requirements, costs, operating expenses, etc.

Although the description above pertains to cooling systems that employ compressors, it should be understood that embodiments of the invention may implement cooling systems having other types of cooling devices, e.g., water chilled heat exchangers and the like.

Various obstructions **60** such as wires and communication lines may be located in the pressurized enclosure **18** beneath the raised floor **16**. These obstructions may increase turbulence. In order to minimize this turbulence, one or more baffles **62** may be placed over the obstruction **60**. The baffle **62** is generally operable to generate an essentially laminar (e.g., smooth, non-turbulent, etc.) flow of cooling fluid. For example, the baffle **62** may be constructed from a plurality of tubes (not shown) aligned in the direction of fluid flow. These tubes may be configured in a honeycomb or other such pattern. Furthermore, it is within the scope of the invention that the baffle **62** or similar structure be configured to rotate about an axis and controlled by an actuator (not shown). In this manner, the direction of cooling fluid flowing within the pressurized enclosure **18** may be modulated. For example, the baffle **62** may be controlled to direct cooling fluid toward a subset (e.g., left, right, center, etc.) of the pressurized enclosure **18** in response to increased cooling needs in the corresponding subset of the zone **20***a*–**20***h*. In another example, the baffle **62** may be controlled to direct the flow of cooling fluid upwards (e.g., out of a vent **24***a*–**24***h*) or downwards (e.g., to increase the flow towards a partition **26***a*–**26***f*).

Referring to FIG. **3**A, there is illustrated a block diagram **300** of a control scheme for a cooling system **302** according to an embodiment of the invention. The following description of the block diagram **300** is one manner in which the cooling system **302** may be operated. In this respect, it is to be understood that the following description of the block diagram **300** is but one manner of a variety of different manners in which such a cooling system **302** may be operated.

A CP controller **304** is generally configured to control the operation of the CPs **26***a*–**26***f*. In this regard, the CP controller **304** may comprise a microprocessor, a microcontroller, an application specific integrated circuit (ASIC), and the like. The manner in which the CP controller **304** operates the CPs **26***a*–**26***f*, i.e., the flow of cooling fluid therethrough, may be predicated upon the detected or anticipated temperatures of the racks **14***a*–**14***p* (See FIG. **1**) or portions thereof. For example, with regard to detected temperatures, a plurality of temperature sensors **312**–**326**, e.g., thermocouples, may be positioned at various positions around the subsystems and/or the racks **14***a*–**14***p*. One or more of the temperature sensors **312**–**326** may correspond to a respective zone **20***a*–**20***h* within the data center **10**. By way of example, the temperature detection by one temperature sensor **312** may result in a corresponding modulation of one CP **26***a* and/or the temperature detection by one temperature sensor **312** may result in the modulation of a plurality of CPs **26***a*–**26***c*. Alternatively, with regard to anticipated temperatures, anticipated cooling requirements for each of the racks **14***a*–**14***p* and/or various sections of the racks may be predicated upon an impending load on the racks **14***a*–**14***p* and/or sections of the racks. For example, the CP controller **304** may be connected to another controller, e.g., a central controller for the subsystems, which anticipates the heat load the components and/or the subsystems will dissipate. This information may be relayed to the CP controller **304** which may then manipulate the CPs **26***a*–**26***f* according to the anticipated load.

Although FIG. **3**A illustrates eight temperature sensors **312**–**326**, it should be understood that the number of temperature sensors is not critical to the operation of the embodiment of the invention. Instead, the cooling system **302** may include any reasonably suitable number of temperature sensors to thus measure the temperatures of any

reasonably suitable number of racks **14***a*–**14***p* or portions thereof. The number of temperature sensors and the temperature measurements of the number of racks may be upgradable, e.g., scalable, to include any additional components and/or racks that may be included in the data center **10**. In addition, the temperature sensors need not be stationary. In this regard, according to another embodiment of the invention, a mobile device (not shown) is implemented to gather or measure at least one local environmental condition (e.g., temperature, air flow, humidity, etc.) in the data center **10**. More particularly, the mobile device is configured to travel around the racks to determine the one or more environmental conditions at various locations throughout the data center. In addition, the device may be configured to detect the one or more environmental conditions at various heights throughout the data center.

A more detailed description of the above-described embodiment may be found in co-pending U.S. application Ser. No. 10/157,892, filed May 31, 2002, which is assigned to the assignee of the present invention and is incorporated by reference herein in its entirety.

If there is an actual detected change or an anticipated change in the temperature of the respective racks **14***a*–**14***p* and/or portions thereof, the CP controller **304** generally operates to manipulate the corresponding one or more CP **26***a*–**26***f* to compensate, i.e., changes the volume flow rate, velocity, and other similar characteristics of the cooling fluid, for the change in temperature. In this respect, each of the zones **20***a*–**20***h* and/or portions thereof generally receives substantially only the amount of cooling fluid necessary to maintain the temperature of the portions of the respective racks therein to within a predetermined temperature range. As will be seen from the discussion hereinbelow, by controlling the cooling fluid flow in this manner, the compressors **44***a*–**44***d* and fans **40***a*–**40***d* may be operated at substantially optimized levels, thereby decreasing the amount of energy and thus the operating costs required to operate these devices.

CP interface electronics **328** may be provided to act as an interface between the CP controller **304** and the components, e.g., control the opening in the CPs **26***a*–**26***f* and the direction of cooling fluid flow through the CPs **26***a*–**26***f*, etc, for operating the CPs **26***a*–**26***f*.

The CP controller **304** may also be interfaced with a CP memory **330** configured to provide storage of a computer software that provides the functionality of the cooling system and may be executed by the CP controller **304**. The memory **320** may also be configured to provide a storage for containing data/information pertaining to the manner in which each of the CPs **26***a*–**26***f* may be manipulated in response to the detected and/or anticipated temperatures of the portions of the racks **14***a*–**14***p*. In keeping with the example cited hereinabove, the CP controller **304** may operate the CP **26***a* to increase the volume flow rate and decrease the velocity of the cooling fluid flowing therethrough in response to a detected increase in the heat load of a lower portion of a corresponding rack. The memory **320** may be implemented as a combination of volatile and non-volatile memory, such as dynamic random access memory (DRAM), EEPROM, flash memory, and the like.

The CP controller **304** may be configured to relay data/information pertaining to the flow of cooling fluid through the CPs **26***a*–**26***f* to a cooling system controller **332**. The cooling system controller **332** is generally configured to control the operation of the cooling system **302**. In this regard, the cooling system controller **332** may comprise a microprocessor, a micro-controller, ASIC, and the like.

Interface electronics **334** may be provided to act as an interface between the cooling system controller **332** and the components for operating the compressors **44***a*–**44***d* and the fans **40***a*–**40***d*, e.g., the supply of voltage to vary the respective speeds of the compressors and the fans, direct control of each compressor and the fan, etc.

The cooling system controller **332** may also be interfaced with a memory **336** configured to provide storage of a computer software that provides the functionality of the cooling system **302**, and may be executed by the cooling system controller **332**. The memory **336** may also be configured to provide a storage for containing data/information pertaining to the manner in which the compressors **44***a*–**44***d* and the fans **40***a*–**40***d* may be manipulated in response to variations in the cooling fluid flow through the CPs **26***a*–**26***f*. In keeping with the example cited hereinabove, the cooling system controller **332** may operate the compressor **44***a* and the fan **40***a* to increase/decrease the volume flow rate of the cooling fluid flow in response to various degrees of detected increases/decreases in the volume flow rate through the CP **26***a*, or using correlations thereof. More particularly, a look up table (not shown) may be stored in the memory **336**. By way of example, the look up table may include information pertaining to the level of compressor **44***a* speed and fan **40***a* output increase necessary for a detected increase in the volume flow rate. In this respect, the compressor **44***a* speed and the fan **40***a* output may be varied substantially incrementally in response to detected changes in the volume flow rate. The memory **336** may be implemented as a combination of volatile and non-volatile memory, such as dynamic random access memory (DRAM), EEPROM, flash memory, and the like.

Although FIG. **3**A illustrates a single CP controller **304** configured to operate the CPs **26***a*–**26***f*, it should be understood that a plurality of CP controllers may be implemented to perform the functions of the CP controller **304** without deviating from the scope and spirit of the invention.

In FIG. **3**B, there is illustrated a block diagram **350** of a control scheme for a cooling system **302** according to another embodiment of the invention. The elements illustrated in the block diagram **350** operate in substantially the same manner as those elements illustrated in the block diagram **300**. However, one difference lies in the substantially independent operability of the cooling system controller **332**. That is, operation of the cooling system controller **332** may not be directly related to the operation of the CP controller **304**. Because of the apparent similarities between the block diagrams **300** and **350**, only those elements that differ between the block diagrams will be described hereinbelow.

The pressure sensors **56***a*–**56***h* are configured to measure the pressure within the second chambers **54***a*–**54***h* of the pressurized enclosure **18** as described hereinabove. The pressure measurements and/or any discernable changes in the pressure measurements obtained by the pressure sensors **56***a*–**56***h* may be relayed to the cooling system controller **332**. In addition, the plenum temperature sensors **58***a*–**58***h* may be configured to measure the temperature of the fluid within the second chambers **54***a*–**54***h*. The temperature measurements and/or any discernable changes in the temperature obtained by the plenum temperature sensors **58***a*–**58***h* may also be relayed to the cooling system controller **332**.

The cooling system controller **332** may manipulate the capacity of the compressors **44***a*–**44***d* based upon the measured temperature of the fluid. That is, the temperature of the

fluid within the second chambers **54***a*–**54***h* may be maintained at a substantially constant level by manipulation of the compressors. Further, the output of the fans **40***a*–**40***h* may be manipulated based upon the measured pressure of the fluid in the second chambers **54***a*–**54***h* to vary the amount of cooling fluid supplied and to thereby substantially maintain the pressure of the cooling fluid within the second chambers **54***a*–**54***h* at a substantially uniform level. Thus, the cooling system controller **332** is operable to individually increase the speed of the compressors **44***a*–**44***d* and the fans **40***a*–**40***h* output, e.g., expend a greater amount of energy, substantially as the heat loads in the racks **14***a*–**14***p* requires such an increase.

For example, the cooling system controller **332** may increase the compressor **44***d* speed and fan **40***d* output by a relatively large amount in response to a relatively large decrease in the measured pressure by the pressure sensor **56***g* (although not explicitly shown, sensor **56***g* is indicated by the ellipsis between **56***a* and **56***h*) if the CP **26***f* is open. However, if the CP **26***f* is closed and the CP **26***e* is open, the cooling system controller **332** may increase the compressor **44***c* speed and fan **40***c* output by a relatively large amount in response to a relatively large decrease in the measured pressure by the pressure sensor **56***g*.

In a further example, in a situation where the cooling fluid demands of zone **20***g* exceed the cooling capacity of a subset of the cooling system **302** (e.g., one or a few of the compressors **44***a*–**44***d* and the fans **40***a*–**40***d*), the cooling system controller **332** may be configured to increase the output of a relatively larger subset of the cooling system **302** and control appropriate CPs **26***a*–**26***f* to increase the flow of cooling fluid to the zone **20***g*. In this respect, the pressure within the second chamber **54***g* (although not explicitly shown, chamber **54***g* is indicated by the ellipsis between **54***a* and **54***h*) may be maintained at a substantially uniform level even when the pressures change by a relatively sharp amount. Consequently, the compressors **44***a*–**44***d* and the fans **40***a*–**40***d* are not operated at a substantially constant energy level and the amount of energy necessary is substantially lower than that of conventional cooling systems that typically operate at maximum energy levels.

The memory **336** may also be configured to store data/information pertaining to the control of the individual compressors' **44***a*–**44***d* speeds and the outputs of the fans, **40***a*–**40***d* corresponding to the measured pressure with the respective second chambers **54***a*–**54***h*.

FIG. **4**A shows a flow diagram **400** of a manner in which an embodiment of the invention may be practiced. The following description of the flow diagram **400** is made with reference to the block diagram **300** illustrated in FIG. **3**A, and thus makes reference to the elements cited therein. It is to be understood that the steps illustrated in the flow diagram **400** may be contained as a utility, program, subprogram, in any desired computer accessible medium. In addition, the flow diagram **400** may be embodied by a computer program, which can exist in a variety of forms both active and inactive. For example, they can exist as software program(s) comprised of program instructions in source code, object code, executable code or other formats. Any of the above can be embodied on a computer readable medium, which include storage devices and signals, in compressed or uncompressed form.

Examples of computer readable storage devices include conventional computer system RAM (random access memory), ROM (read only memory), EPROM (erasable, programmable ROM), EEPROM (electrically erasable, programmable ROM), and magnetic or optical disks or tapes. Examples of computer readable signals, whether modulated using a carrier or not, are signals that a computer system hosting or running the computer program can be configured to access, including signals downloaded through the Internet or other networks. Concrete examples of the foregoing include distribution of the programs on a CD ROM or via Internet download. In a sense, the Internet itself, as an abstract entity, is a computer readable medium. The same is true of computer networks in general. It is therefore to be understood that those functions enumerated below may be performed by any electronic device capable of executing the above-described functions.

In the flow diagram **400**, the cooling system **302** is activated and the CPs **26***a*–**26***f* are opened at step **402**. The temperature of a component (Tc) generally corresponds to the heat load of the heat dissipating components and therefore the subsystems contained in the racks **14***a*–**14***p*. Therefore, the Tc's may be based upon the temperatures of specific heat dissipating components and subsystems. In addition, the Tc's may be based upon the temperatures in the general vicinity of the racks and/or sections of the racks. Thus, those skilled in the art will understand that certain embodiments of the invention may be employed with the temperature sensors **312**–**326** located at various positions throughout the data center **10**. The number of temperature sensors and the temperature measurements of the number of racks may be upgradable, e.g., scalable, to include any additional components and/or racks that may be included in the data center. In addition, the temperature sensors need not be stationary. In this regard, according to another embodiment of the invention, a mobile device (not shown) is implemented to gather or measure at least one local environmental condition (e.g., temperature, air flow, humidity, etc.) in the data center **10**. More particularly, the mobile device is configured to travel around the racks to determine the one or more environmental conditions at various locations throughout the data center. In addition, the device may be configured to detect the one or more environmental conditions at various heights throughout the data center. The information gathered by the mobile device may be transmitted to the cooling system controller **332**. As described hereinabove, the cooling system controller **332** may vary the delivery and temperature of cooling fluid according to the one or more detected environmental conditions. In this respect, the energy necessary to cool the racks and the components contained therein, may substantially be optimized.

A more detailed description of the above-described embodiment may be found in co-pending U.S. application Ser. No. 10/157,892, filed May 31, 2002, which is assigned to the assignee of the present invention and is incorporated by reference herein in its entirety.

Moreover, use of the term "rack" herein generally refers additionally to sections of the racks and thus may not necessarily refer to an entire rack. Thus, the use of the term "rack" throughout the disclosure is not meant to limit certain aspects to entire racks, but instead, is implemented to simplify the description of certain embodiments of the invention.

At step **404**, the temperatures of the components (Tc's) are individually sensed by the temperature sensors **312**–**326**. Alternatively, the Tc's may be anticipated in the manner described hereinabove with respect to FIG. **3**A. At step **406**, it is determined whether each of the measured temperatures are individually within a predetermined range of operating temperatures, e.g., between a maximum set point tempera-

ture (Tmax,set) and a minimum set point temperature (Tmin, set). The predetermined range of operating temperatures may be set according to a plurality of factors. These factors may include, for example, the operating temperatures set forth by the manufacturers of the subsystems and components located in the racks, through testing to determine the optimal operating temperatures, etc. In addition, the predetermined range of operating temperatures may vary from one subsystem to another on the basis that various subsystems generally may operate effectively at various temperatures.

The measured and/or anticipated temperatures for those racks determined to have heat loads that fall within the predetermined range of operating temperatures are sensed again at step **404**. For those racks determined to have heat loads that do not fall within the predetermined temperature range, i.e., fall outside of Tmin,set and Tmax,set, it is determined whether the sensed temperature equals or falls below the Tmin,set at step **408**. In general, the range of temperatures Tmin,set and Tmax,set pertain to threshold temperatures to determine whether to increase or decrease the flow of cooling fluid delivered to the racks. The predetermined temperature range may be based upon a plurality of factors, for example, a threshold operating range of temperatures that may be determined through testing to substantially optimize the performance of the subsystems contained in the racks. Moreover, the predetermined temperature range may vary for each rack because various components generally may operate effectively at various temperatures and thus various threshold temperatures may be optimal.

If the Tc's of some of the racks are below or equal to the Tmin,set, the CP controller **304** may operate to decrease the volume flow rate and/or the velocity of cooling fluid to those racks at step **410**. The determination of whether to decrease either or both the volume flow rate and the velocity of the cooling fluid may be based upon the detected temperatures of the racks. For example, if the subsystems on a bottom half of a rack are operating at 50 percent of maximum capacity, and the subsystems on an upper half of the rack are operating at or near zero capacity, the velocity of the cooling fluid may be reduced whereas the volume flow rate may remain substantially constant. This may occur, for example, because the cooling fluid need not travel a relatively long distance but may still need to supply the bottom half with a sufficient amount of cooling fluid.

If the Tc's of some of the racks exceed the Tmin,set (i.e., also exceed the Tmax,set), the CP controller **304** may operate to increase the volume flow rate and/or the velocity of cooling fluid to those racks at step **412**. The determination of whether to increase either or both the volume flow rate and the velocity of the cooling fluid may be based upon the detected temperature of the racks. For example, if the subsystems on the top half of a rack are operating at 100 percent capacity, and the subsystems on a bottom half of the rack are operating at or near zero capacity, the velocity and the volume flow rate of the cooling fluid may both be increased. This may occur, for example, because the cooling fluid must travel a relatively long distance and supply the top half with a sufficient amount of cooling fluid.

According to an embodiment of the invention, the decrease in volume flow rate and/or velocity of the cooling fluid flow at step **410** and the increase in volume and/or velocity of the cooling fluid at step **412** may be accomplished by incrementally varying the cooling fluid flow through the appropriate CPs. An example will be made for the instance where a CP allows a certain amount of cooling fluid to flow therethrough, and the CP is manipulated to decrease the volume flow rate of the cooling fluid, and where the decrease in fluid flow is insufficient to cause the Tc for the racks within that respective zone to fall within the predetermined range. In this instance, during a subsequent run through steps **304–310**, the CP may be controlled to further decrease the volume flow rate of the cooling fluid therethrough by an incremental amount. By repeating this process a number of times, the temperature of the racks within that respective zone may be substantially brought within the predetermined range.

At step **414**, the cooling system controller **332** may determine whether to decrease the cooling fluid output, e.g., decrease each compressor **44***a*–**44***d* speed and each fan **40***a*–**40***d* output. The determination of whether to decrease the cooling fluid output may be made in response to the manipulations made to the CPs **26***a*–**26***f* by the CP controller **304**. For instance, if the total amount of decreases in the volume flow rates of the cooling fluid exceeds the total amount of increases in the volume flow rates flow of the cooling fluid, the cooling system controller **332** may operate to decrease the cooling fluid output at step **416**. Alternatively, if the total amount of increases in the volume flow rates of the cooling fluid exceeds the total amount of decreases, the cooling system controller **332** may operate to increase the cooling system **302** output at step **418**.

Following steps **416** or **418**, or if the increases in the volume flow rates of the cooling fluid through the CPs **26***a*–**26***f* equals the decreases, for example, the Tc's are sensed again at step **404**. In addition, the steps following step **404** may be repeated for an indefinite period of time so long as the cooling system **302** is in operation.

It should be appreciated that the Tc's of some of the racks may fall below the Tmin,set, whereas the Tc's of other racks may exceed the Tmax,set. Thus, it should be appreciated that steps **410** and **412** may be respectively and substantially simultaneously performed on the various racks. In such an instance where the Tc of one rack in a zone exceeds the Tmax,set while the Tc of another rack in the same zone falls below the Tmin,set, the cooling requirements of relatively warmer rack may be utilized to control the flow of cooling fluid. However, it is within the scope of the invention that dynamically controllable vents be utilized to control the flow of cooling fluid to one rack or a subset thereof and thereby reduce the overall cooling requirements of a zone. A more detailed description of the above-described embodiment may be found in co-pending U.S. application Ser. No. 09/970,707, filed Oct. 5, 2001, which is assigned to the assignee of the present invention and is incorporated by reference herein in its entirety.

FIG. **4**B shows a flow diagram **450** of a manner in which another embodiment of the invention may be practiced. The following description of the flow diagram **450** is made with reference to the block diagram **350** illustrated in FIG. **3**B, and thus makes reference to the elements cited therein. It is to be understood that the steps illustrated in the flow diagram **450** may be contained as a utility, program, subprogram, in any desired computer accessible medium. In addition, the flow diagram **450** may be embodied by a computer program, which can exist in a variety of forms both active and inactive. For example, they can exist as software program(s) comprised of program instructions in source code, object code, executable code or other formats. Any of the above can be embodied on a computer readable medium, which include storage devices and signals, in compressed or uncompressed form.

Examples of computer readable storage devices include conventional computer system RAM (random access

memory), ROM (read only memory), EPROM (erasable, programmable ROM), EEPROM (electrically erasable, programmable ROM), and magnetic or optical disks or tapes. Examples of computer readable signals, whether modulated using a carrier or not, are signals that a computer system hosting or running the computer program can be configured to access, including signals downloaded through the Internet or other networks. Concrete examples of the foregoing include distribution of the programs on a CD ROM or via Internet download. In a sense, the Internet itself, as an abstract entity, is a computer readable medium. The same is true of computer networks in general. It is therefore to be understood that those functions enumerated below may be performed by any electronic device capable of executing the above-described functions.

In the flow diagram **450**, steps **452**–**462** respectively correspond to steps **402**–**412** recited hereinabove with respect to the flow diagram **400** illustrated in FIG. **4**A. Therefore, a detailed description of steps **452**–**462** will not be made herein. Instead, one of ordinary skill in the art will readily recognize that the description made hereinabove with respect to steps **402**–**412** has general applicability to steps **452**–**462** and may thus be used interchangeably.

Therefore, beginning at step **464**, the pressure of the cooling fluid supplying the zones **20***a*–**20***h* may be measured by the respective pressure sensors **56***a*–**56***h*. The measured pressure may be relayed to the cooling system controller **332**. The cooling system controller **332** may determine whether the measured pressure is within a predetermined pressure range, e.g., a predetermined minimum set point pressure (Pmin,set) and a predetermined maximum set point pressure (Pmax,set), at step **466**. The predetermined pressure range may be set according to a maximum desired volume flow rate and/or velocity of the cooling fluid to flow through the CPs **26***a*–**26***f*. In addition, the predetermined pressure range may be the substantial optimum operating pressure desired for controlling the flow of cooling fluid through each of the zones **20***a*–**20***h*. If the measured pressure is within the predetermined pressure range, the cooling system controller **332** returns to step **464**.

If the measured pressure is not within the predetermined pressure range, it is determined whether the measured pressure (P) is below or equal to a minimum pressure set point (Pmin,set) at step **468**. The pressure P is defined as the pressure difference between a location within the pressurized enclosure **18** and generally below a vent **24***a*–**24***h* and a location essentially above the respective vent **24***a*–**24***h*. In general, the predetermined pressure range pertains to the threshold pressures to determine whether to individually increase or decrease the supply of fluid, e.g., in each second chamber **54***a*–**54***h*. The predetermined pressure range may be based upon a plurality of factors, for example, a threshold operating pressure or range of pressures that may be determined through testing to substantially optimize the performance of the cooling fluid output through the CPs **26***a*–**26***f*.

If the P is determined to be below or equal to the Pmin,set, the cooling system controller **332** may operate to increase the cooling fluid output, e.g., by increasing the appropriate fan output, at step **470**. Otherwise, if the P is determined to exceed the Pmin,set, and thereby exceed the Pmax,set, the cooling system controller **332** may operate to decrease cooling fluid output, e.g., by decreasing the appropriate fan output, at step **472**.

Following steps **470** or **472**, the cooling system controller **332** returns to step **464**. In addition, the steps following step **464** may be repeated for an indefinite period of time so long as the cooling system **302** is in operation.

It should be appreciated that the Tc's of some of the zones and/or racks within some zones may fall below the Tmin,set, whereas the Tc's of other zones and/or racks within those zones may exceed the Tmax,set. Thus, in various embodiments of the invention, steps **460** and **462** may be respectively and substantially simultaneously performed on each the various zones and/or racks.

FIG. **5** shows a simplified schematic cross-sectional side view along lines IIA—IIA of FIG. **1** containing zones **20***g* and **20***h* in accordance with another embodiment of the invention. As shown in FIG. **5**, the data center **10** includes the cooling system **12***d* configured to receive cooling fluid through a pressurized enclosure **502** (e.g., plenum) located above a lowered ceiling **504**. This embodiment operates in a similar manner to the embodiments illustrated in FIGS. **1**, **2**A–**2**B, **3**A–**3**B, and **4**A–**4**B. The difference between the embodiment illustrated in FIG. **5** and those embodiments is that the cooling fluid heated by the components in the racks **14***a*–**14***p* is removed from above by returns **506***a*–**506***c*. In addition, the return flow of cooling fluid may be varied by the operation of a controllable partition ("CP") **508**. The CP **508** may be modulated by the operation of a motor **510** in a manner similar to the CP **26***a*–**26***f* discussed above. In this manner, relatively warm air may be removed more efficiently. A more detailed description of the above-described embodiment may be found in co-pending U.S. application Ser. No. Not Yet Assigned, filed Oct. 3, 2002, which is assigned to the assignee of the present invention and is incorporated by reference herein in its entirety.

It should be understood that the vents **24***a*–**24***h* operate to supply cooling fluid to the racks **14***a*–**14***p* in much the same manner as that described hereinabove with respect to FIGS. **1**, **2**A–**2**B, **3**A–**3**B, and **4**A–**4**B. Therefore, the description set forth hereinabove with respect to the above-described embodiments are relied upon to provide a description of the embodiment illustrated in FIG. **5**.

In accordance with an embodiment of the invention, the cooling requirements within a data center may be analyzed to substantially optimize the layout of the racks within zones of the data center. In one respect, the substantial optimization of the rack layout in the data center may enable the cooling system of the data center to operate at generally lower energy and greater efficiency levels by virtue of the reduced workload placed on the components of the cooling systems, e.g., compressors, fans, etc. The cooling requirements within the data center may be analyzed by operation of any reasonably suitable commercially available computational fluid dynamics (CFD) tool, e.g., FLOVENT, a 3-D modeling software capable of predicting temperature variations based upon fluid flows. By virtue of the numerical modeling, various air conditioning units as well as the vents described hereinabove may be positioned throughout the data center to substantially control the manner in which the racks receive the cooling fluid. In addition, the air conditioning units may also be positioned to substantially maximize and optimize their performances, e.g., to prevent one or more of the air conditioning units from being overworked.

In determining the cooling fluid distribution requirement within the data center, each of the racks may be assigned a heat load which may correspond to a maximum heat load predicted for that rack, e.g., through anticipated power draw. For example, a rack containing 40 subsystems, e.g., computers, may have a maximum heat load of 10 KW and a rack containing 20 subsystems may have a maximum heat load of 5 KW. By implementing the CFD in this manner, for example in a data center containing 100 racks and four air conditioning units, racks having a potential for relatively

larger heat loads may be relatively separately located throughout the data center. In one respect, therefore, the air conditioning units within the data center may be operated at substantially legs than maximum power levels and the racks may receive sufficient amounts of cooling fluid. More specifically, the power required to operate the air conditioning units may be regulated to efficiently cool the fluid supplied to the racks by providing substantially only that amount of cooling fluid necessary to maintain the racks within normal operating temperatures.

According to another embodiment of the invention, a CFD tool may be implemented substantially continuously with the embodiments described hereinabove with respect to FIGS. **1**–**5**. More specifically, the CFD tool may be utilized to substantially continuously vary the operation of the cooling system to operate according to the heat loads generated in the racks. In this regard, the anticipated or actual heat loads (e.g., based upon the power draw of the components) on the racks may be inputted into the CFD tool, along with one or more of the following properties: velocity of the cooling fluid flowing through various sections of the data center and the distribution of temperature and pressure of the cooling fluid in the data center, to determine an optimal manner in which the air conditioning units may be operated as well as the flow of the cooling fluid through the CPs to adequately cool the racks within each zone based upon an analysis of the data center layout and the heat loads. The CFD tool may be implemented to produce a numerical model of the data center to thus determine an optimized cooling distribution within the data center. A correlation of one or more of the following properties: velocity of the cooling fluid flowing through various zones of the data center, distribution of temperature and pressure of the cooling fluid in the data center, and the power draw into the racks, may be created based on the numerical modeling. The correlation may be used to infer thermal conditions throughout the data center when only a minimum number of sensors are available during operation of the cooling system. In addition, the correlation may substantially reduce the amount of time required for the CFD tool to perform the computing operations.

Thus, for example, with respect to FIG. **4**A, at step **412**, a numerical model may be created to analyze an optimal manner in which the volume flow and/or the velocity of the cooling fluid may be increased while considering the effects of fluid flow from other racks. In this respect, based upon the analysis, the CP supplying the respective zone and/or the vent supplying that rack with cooling fluid and/or another CP and/or vent may be caused to vary the volume flow and/or velocity of the cooling fluid. In addition, at step **414**, the numerical model may be created to determine whether the cooling system output should be decreased based upon the heat loads and the fluid flow throughout the data center. For example, if it is determined that a rack with an increasing heat load may receive a sufficient amount of cooling fluid by receiving cooling fluid from a vent in another zone or generally away therefrom, the cooling system output may not be increased. Furthermore, the CFD tool may be utilized to analyze fluid flow characteristics in a situation in which a zone without a cooling system (e.g., zones **20***b*, **20***d*, **20***e*, and **20***f*) is generating a relatively greater amount of heat than adjacent zones.

In such a situation, the analysis may indicate a subset of the processing load be transferred. Alternatively or in addition, one or more vents within zones having a cooling system (e.g., zones **20***a*, **20***c*, **20***f*, and **20***h*) may be controlled to reduce the flow of fluid therethrough and thus, increase the available flow to zones in fluid communication. In this regard, as described generally hereinabove and in more detail within co-pending U.S. application Ser. No. 09/970,707, filed Oct. 5, 2001, which is assigned to the assignee of the present invention and is incorporated by reference herein in its entirety, the vents **24***a*–**24***h* may be dynamically controllable.

Moreover, it is within the scope of the invention that a fan (not shown) in or near a CP **26***a*–**26***f* be controlled to increase the flow of cooling fluid through an associated CP **26***a*–**26***f*. Thus, by implementation of the CFD tool to generally analyze the fluid flow characteristics and the temperatures of the racks, the amount of energy required to sufficiently cool the racks within each of the zones in the data center may be substantially optimized.

By virtue of certain aspects of the invention, one of ordinary skill in the art will readily recognize that the amount of energy, and thus the costs associated with cooling the racks located within a data center may be substantially reduced. In one respect, by operating the cooling system to supply cooling fluid substantially only as needed by each respective zone, the cooling system may be operated at a relatively more efficient manner as compared to conventional cooling systems.

What has been described and illustrated herein is an embodiment of the invention along with some of its variations. The terms, descriptions and figures used herein are set forth by way of illustration only and are not meant as limitations. Those skilled in the art will recognize that many variations are possible within the spirit and scope of the invention, which is intended to be defined by the following claims—and their equivalents—in which all terms are meant in their broadest reasonable sense unless otherwise indicated.

What is claimed is:

1. A method of cooling a plurality of racks in a data center, said method comprising:

activating a cooling device and opening a controllable partition configured to vary a supply of cooling fluid within a zone of said data center, said zone including at least one associated rack of said plurality of racks;

sensing the temperature of said at least one associated rack;

determining whether said sensed temperature is within a predetermined temperature range; and

manipulating said controllable partition to vary said supply of said cooling fluid to said zone in response to said sensed temperature being outside said predetermined temperature range.

2. The method according to claim **1**, further comprising:

determining whether the measured temperature of said at least one associated rack is below or equal to a predetermined minimum set point temperature; and

decreasing the supply of said cooling fluid to said zone in response to said at least one associated rack having a measured temperature that falls below or equal said predetermined minimum set point temperature.

3. The method according to claim **1**, further comprising:

sensing a pressure of a supply of said cooling fluid;

determining whether said sensed pressure is within a predetermined pressure range; and

varying an output of said cooling device in response to said sensed pressure falling outside of said predetermined pressure range.

4. The method according to claim **2**, further comprising:

increasing the supply of said cooling fluid to said zone in response to said at least one associated rack having a measured temperature that exceed said predetermined minimum set point temperature.

5. The method according to claim **3**, wherein said step of varying said cooling device output includes determining whether said measured pressure falls below or equals a predetermined minimum set point pressure.

6. The method according to claim **4**, further comprising:

decreasing an output of said cooling fluid from said cooling device in response to said decrease in cooling fluid supply to said zone exceeding said increase in cooling fluid supply to said zone.

7. The method according to claim **4**, further comprising:

opening a plurality of vents, said vents being configured to supply cooling fluid to said racks;

controlling one or more of said plurality vents to decrease the supply of said cooling fluid to said at least one associated rack having a measured temperature that fall below or equal said predetermined minimum set point temperature; and

controlling said one or more vents to increase the supply of said cooling fluid to said at least one associated rack having a measured temperature that exceed said predetermined minimum set point temperature.

8. The method according to claim **4**, further comprising:

opening a plurality of returns, said returns being configured to remove cooling fluid from various locations of said data center; and

controlling one or more of said plurality of returns to decrease the removal of said cooling fluid from around said at least one associated rack having a measured temperature that fall below or equal said predetermined minimum set point temperature; and

controlling said one or more returns to increase the removal of said cooling fluid from around said at least one associated rack having a measured temperature that exceed said predetermined minimum set point temperature.

9. The method according to claim **4**, further comprising:

receiving temperatures from a movable device configured to detect at least one environmental condition at various locations of said data center;

determining whether at least one of said sensed temperatures and received temperatures are within a predetermined temperature range; and

manipulating said controllable partition to vary said supply of said cooling fluid to said zone in response to at least one of said sensed and received temperatures being outside of said predetermined temperature range.

10. The method according to claim **4**, further comprising:

performing a numerical modeling of a temperature distribution and flow characteristics of the data center; and

manipulating said cooling device in response to said numerical modeling.

11. The method according to claim **5**, further comprising:

increasing the output of said cooling device in response to said measured pressure falling below or equaling said predetermined minimum set point pressure.

12. The method according to claim **5**, further comprising:

decreasing the output of said cooling device in response to said measured pressure exceeding said predetermined minimum set point pressure.

13. The method according to claim **6**, further comprising:

increasing an output of said cooling fluid from said cooling device in response to said decrease in cooling fluid supply to said zone falling below said increase in cooling fluid supply to said zone.

14. The method according to claim **7**, further comprising:

determining whether said at least one associated rack having a measured temperature that exceeds said predetermined minimum set point temperature is relatively downstream of the supply of said cooling fluid from said at least one associated rack having a measured temperature that fall below or equal said predetermined minimum set point temperature; and

controlling said one or more vents to decrease the supply of said cooling fluid to said at least one associated rack being relatively upstream of the supply of said cooling fluid and controlling said one or more vents to increase the supply of said cooling fluid to said at least one associated rack being relatively downstream of the supply of said cooling fluid in response to determining said at least one associated rack having a measured temperature that exceeds said predetermined minimum set point temperature is relatively downstream of the supply of said cooling fluid from said at least one associated rack having a measured temperature that fall below or equal said predetermined minimum set point temperature.

15. The method according to claim **10**, further comprising:

implementing said numerical modeling to correlate at least two of temperature, velocity and pressure of said cooling fluid and power draw of at least one of said zone and said racks within said data center to thereby infer a thermal condition throughout said data center, wherein said manipulating step further comprises manipulating said cooling device in response to said inferred thermal condition.

16. A apparatus of cooling a plurality of racks in a data center, said apparatus comprising:

means for activating a cooling device and opening a controllable partition configured to vary a supply of cooling fluid within a zone of said data center, said zone including at least one associated rack of said plurality of racks;

means for sensing the temperature of said at least one associated rack;

means for determining whether said sensed temperature is within a predetermined temperature range; and

means for manipulating said controllable partition to vary said supply of said cooling fluid to said zone in response to said sensed temperature being outside said predetermined temperature range.

17. The apparatus according to claim **16**, further comprising:

means for determining whether the measured temperature of said at least one associated rack is below or equal to a predetermined minimum set point temperature;

means for decreasing the supply of said cooling fluid to said zone in response to said at least one associated rack having a measured temperature that falls below or equal said predetermined minimum set point temperature; and

means for increasing the supply of said cooling fluid to said zone in response to said at least one associated rack having a measured temperature that exceed said predetermined minimum set point temperature.

18. The apparatus according to claim **16**, further comprising:

means for sensing a pressure of a supply of said cooling fluid;

means for determining whether said sensed pressure is within a predetermined pressure range; and

means for varying an output of said cooling device in response to said sensed pressure falling outside of said predetermined pressure range, wherein said step of varying said cooling device output includes determining whether said measured pressure falls below or equals a predetermined minimum set point pressure.

19. The apparatus according to claim **17**, further comprising:

decreasing an output of said cooling fluid from said cooling device in response to said decrease in cooling fluid supply to said zone exceeding said increase in cooling fluid supply to said zone; and

means for increasing an output of said cooling fluid from said cooling device in response to said decrease in cooling fluid supply to said zone falling below said increase in cooling fluid supply to said zone.

20. The apparatus according to claim **17**, further comprising:

means for opening a plurality of vents, said vents being configured to supply cooling fluid to said racks;

means for controlling one or more of said plurality vents to decrease the supply of said cooling fluid to said at least one associated rack having a measured temperature that fall below or equal said predetermined minimum set point temperature; and

means for controlling said one or more vents to increase the supply of said cooling fluid to said at least one associated rack having a measured temperature that exceed said predetermined minimum set point temperature.

21. The apparatus according to claim **17**, further comprising:

means for opening a plurality of returns, said returns being configured to remove cooling fluid from various locations of said data center; and

means for controlling one or more of said plurality of returns to decrease the removal of said cooling fluid from around said at least one associated rack having a measured temperature that fall below or equal said predetermined minimum set point temperature; and

means for controlling said one or more returns to increase the removal of said cooling fluid from around said at least one associated rack having a measured temperature that exceed said predetermined minimum set point temperature.

22. The apparatus according to claim **17**, further comprising:

means for receiving temperatures from a movable device configured to detect at least one environmental condition at various locations of said data center;

means for determining whether at least one of said sensed temperatures and received temperatures are within a predetermined temperature range; and

means for manipulating said controllable partition to vary said supply of said cooling fluid to said zone in response to at least one of said sensed and received temperatures being outside of said predetermined temperature range.

23. The apparatus according to claim **17**, further comprising:

means for performing a numerical modeling of a temperature distribution and flow characteristics of the data center; and

means for manipulating said cooling device in response to said numerical modeling.

24. The apparatus according to claim **18**, further comprising:

means for increasing the output of said cooling device in response to said measured pressure falling below or equaling said predetermined minimum set point pressure; and

means for decreasing the output of said cooling device in response to said measured pressure exceeding said predetermined minimum set point pressure.

25. The apparatus according to claim **20**, further comprising:

means for determining whether said at least one associated rack having a measured temperature that exceeds said predetermined minimum set point temperature is relatively downstream of the supply of said cooling fluid from said at least one associated rack having a measured temperature that fall below or equal said predetermined minimum set point temperature; and

means for controlling said one or more vents to decrease the supply of said cooling fluid to said at least one associated rack being relatively upstream of the supply of said cooling fluid and controlling said one or more vents to increase the supply of said cooling fluid to said at least one associated rack being relatively downstream of the supply of said cooling fluid in response to determining said at least one associated rack having a measured temperature that exceeds said predetermined minimum set point temperature is relatively downstream of the supply of said cooling fluid from said at least one associated rack having a measured temperature that fall below or equal said predetermined minimum set point temperature.

26. The apparatus according to claim **23**, further comprising:

means for implementing said numerical modeling to correlate at least two of temperature, velocity and pressure of said cooling fluid and power draw of at least one of said zone and said racks within said data center to thereby infer a thermal condition throughout said data center, wherein said manipulating step further comprises manipulating said cooling device in response to said inferred thermal condition.

27. A cooling system for cooling racks in a data center, said system comprising:

a cooling device for supplying cooling fluid to said racks, said cooling device including a fan;

a plenum for conveying said cooling fluid to said racks, said plenum being in fluid communication with said fan; and

a controllable partition located within said plenum, wherein pressure of said cooling fluid in said plenum is controlled by modulation of said partition.

28. The system according to claim **27**, wherein said plenum includes a divider operable to divide said plenum into a first chamber and a second chamber, wherein said first chamber is in fluid communication with said cooling device and at least one of said first chamber and said second chamber is in fluid communication with said controllable partition, and wherein said divider operates to maintain the pressure of said cooling fluid in said second chamber at a substantially uniform pressure.

29. The system according to claim **27**, wherein said controllable partition is comprised of a plurality of louvers operable to adjust from fully open to fully closed.

30. The system according to claim **27**, wherein said controllable partition is operable to rotate.

31. The system according to claim **27**, wherein said controllable partition is operable to retract and elongate.

32. The system according to claim **27**, further comprising:

a return plenum having a plurality of returns and an outlet, wherein said outlet of said return plenum is in fluid communication with said fan, wherein said plurality of returns are configured for removing said cooling fluid from said data center and are operable to vary a characteristic of said removal of cooling fluid through said returns; and

at least one return controller operable to control at least one of said returns, wherein said at least one return controller is configured to substantially independently control said returns to thereby substantially independently vary said characteristic of said cooling fluid removal.

33. The system according to claim **27**, further comprising:

a plurality of vents for delivering said cooling fluid to said racks, wherein said vents are operable to vary a characteristic of said cooling fluid delivered through each of said vents; and

at least one vent controller operable to control at least one of said vents, wherein said at least one vent controller is configured to independently control said vents to thereby independently vary said characteristic of said cooling fluid.

34. The system according to claim **27**, further comprising:

a baffle positioned within said plenum for generating substantially laminar flow of said cooling fluid.

35. The system according to claim **27**, further comprising a sensor for measuring an environmental condition, wherein a characteristic of said supply of cooling fluid is modified in response to said measured environmental condition, said characteristic of said cooling fluid including at least one of volume flow rate and velocity, and said environmental condition including at least one of temperature, pressure, air flow, and humidity.

36. The system according to claim **34**, wherein said baffle is further configured to control the direction of flow of said cooling fluid and the system further comprises:

a controller operable to control said baffle, wherein said controller is configured to control said baffle to vary the direction of flow of said cooling fluid.

37. The system according to claim **35**, further comprising:

a plurality of controllable partitions configured to subdivide said plenum into a plurality of zones; and

at least one controllable partition controller operable to control at least one of said controllable partitions, wherein said at least one controllable partition controller is configured to independently control said controllable partitions to thereby independently vary said characteristic of said cooling fluid.

38. The system according to claim **37**, wherein said sensor comprises a plurality of sensors configured to measure said environmental condition of said racks and said at least one controllable partition controller is configured to independently control said controllable partitions in response to said measured environmental condition at each of said racks.

39. The system according to claim **37**, wherein said at least one controllable partition controller is operable to independently control each of said controllable partitions on the basis of an anticipated amount of heat predicted to be generated by each of said racks.

40. The system according to claim **37**, further comprising:

a cooling device controller operable to control said supply of cooling fluid from said cooling device in response to signals received from said at least one controllable partition controller and thereby vary the cooling fluid supply in said plenum.

41. The system according to claim **37**, further comprising a mobile device having said sensor and configured to navigate said data center and relay data associated with said environmental conditions to said at least one controllable partition controller.

* * * * *

Exhibit 7

US007031870B2

(12) **United States Patent**
Sharma et al.

(10) **Patent No.: US 7,031,870 B2**
(45) **Date of Patent: Apr. 18, 2006**

(54) **DATA CENTER EVALUATION USING AN AIR RE-CIRCULATION INDEX**

(75) Inventors: **Ratnesh K. Sharma**, Union City, CA (US); **Cullen E. Bash**, San Francisco, CA (US); **Chandrakant D. Patel**, Fremont, CA (US)

(73) Assignee: **Hewlett-Packard Development Company, L.P.**, Houston, TX (US)

(*) Notice: Subject to any disclaimer, the term of this patent is extended or adjusted under 35 U.S.C. 154(b) by 126 days.

(21) Appl. No.: **10/855,400**

(22) Filed: **May 28, 2004**

(65) **Prior Publication Data**

US 2005/0267639 A1 Dec. 1, 2005

(51) **Int. Cl.**
G01K 1/00 (2006.01)
G01K 11/00 (2006.01)

(52) **U.S. Cl.** **702/130**

(58) **Field of Classification Search** 702/130
See application file for complete search history.

(56) **References Cited**

U.S. PATENT DOCUMENTS

2003/0139894 A1* 7/2003 Ryan et al. 702/132
2005/0187664 A1* 8/2005 Bash et al. 700/276
2005/0228618 A1* 10/2005 Patel et al. 702/188

* cited by examiner

Primary Examiner—John Barlow
Assistant Examiner—Demetrius R. Pretlow
(74) *Attorney, Agent, or Firm*—Richard P. Lange

(57) **ABSTRACT**

In a method for evaluating one or more components in a data center, inlet and outlet temperatures of one or more heat dissipating devices are detected. In addition, the temperatures of air supplied by one or more computer room air conditioning (CRAC) units are also detected. Indices of air re-circulation for the one or more heat dissipating devices are calculated based upon the detected inlet temperatures, outlet temperatures and supplied air temperatures. The indices of air re-circulation are determined at various flow field settings of air delivered to the one or more heat dissipating devices and the one or more components are evaluated based upon changes in the indices of air re-circulation for the one or more heat dissipating devices at the various flow field settings.

41 Claims, 9 Drawing Sheets

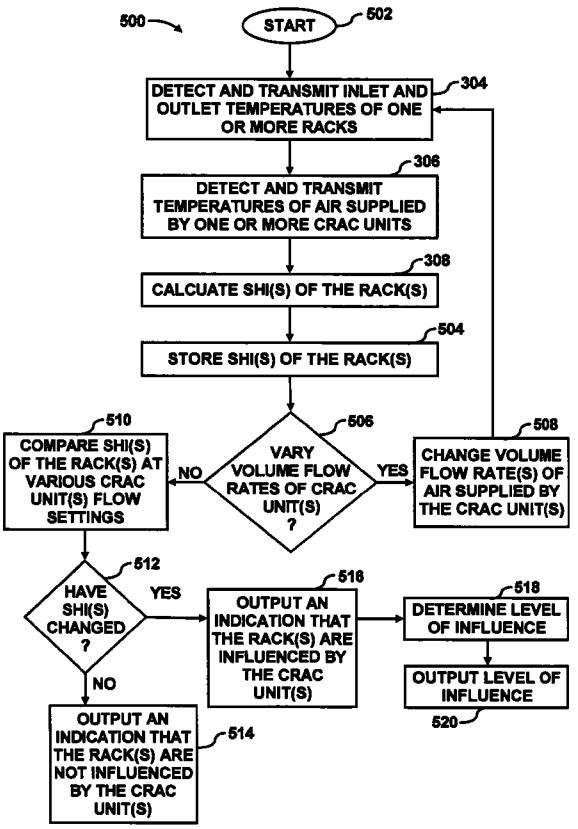

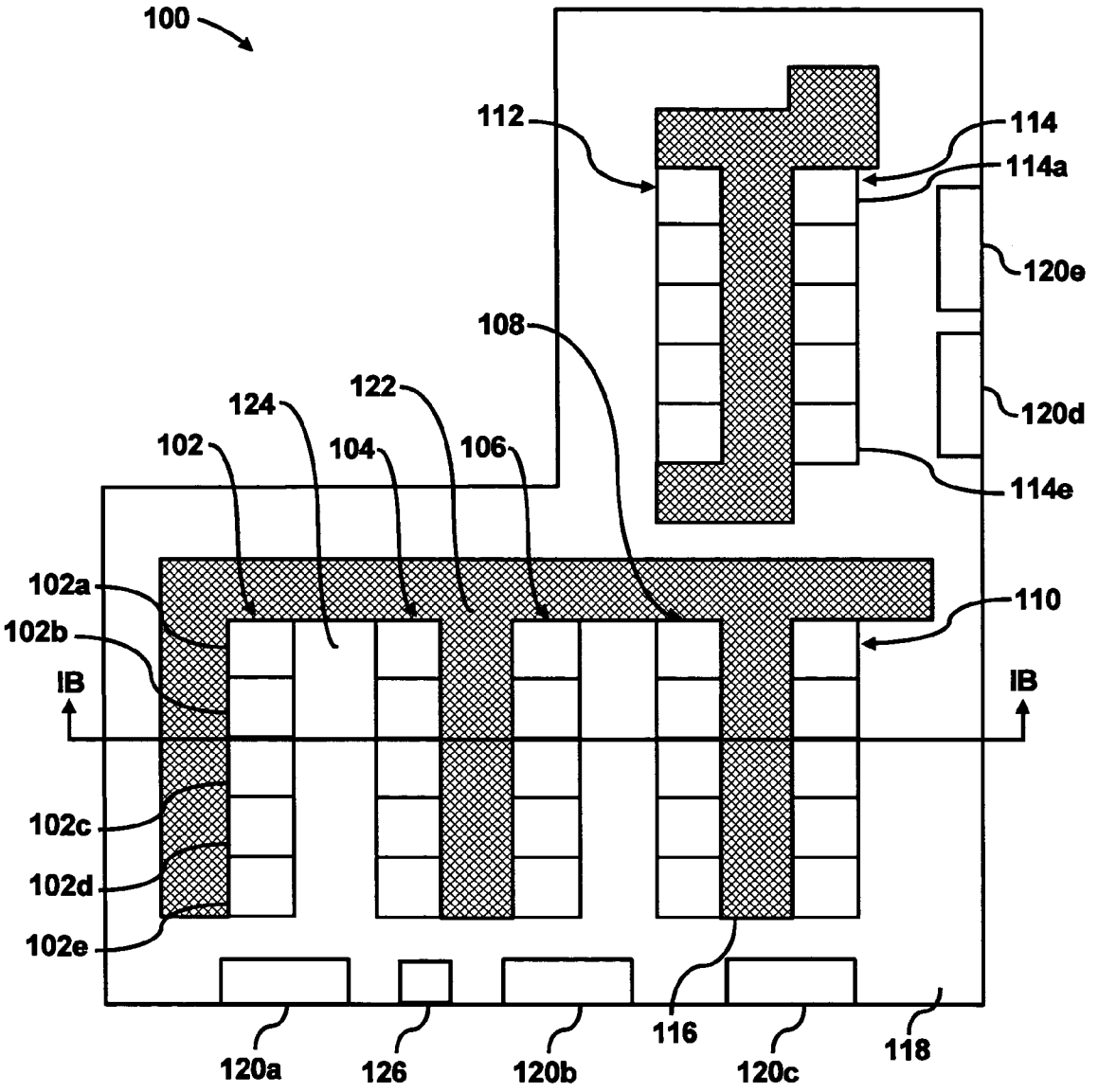
100
112
114
114a
120e
108
122
124
120d
102
104
106
114e
102a
110
102b
IB
IB
102c
102d
102e
116
120a
126
120b
120c
118

FIG. 1A

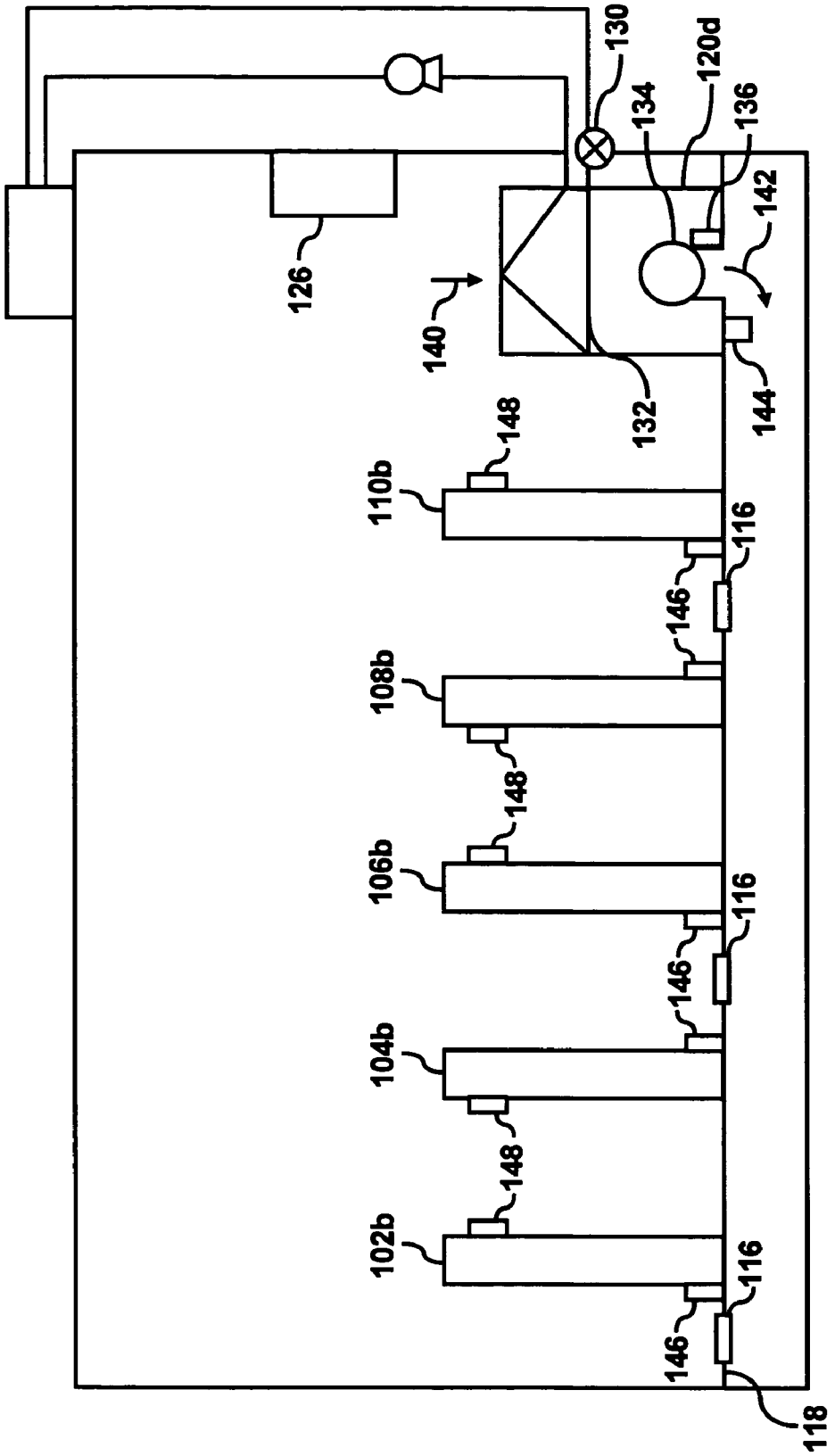
130
120d
134
136
142
126
140
132
144
148
110b
116
146
108b
148
106b
116
146
104b
148
102b
116
146
118

FIG. 1B

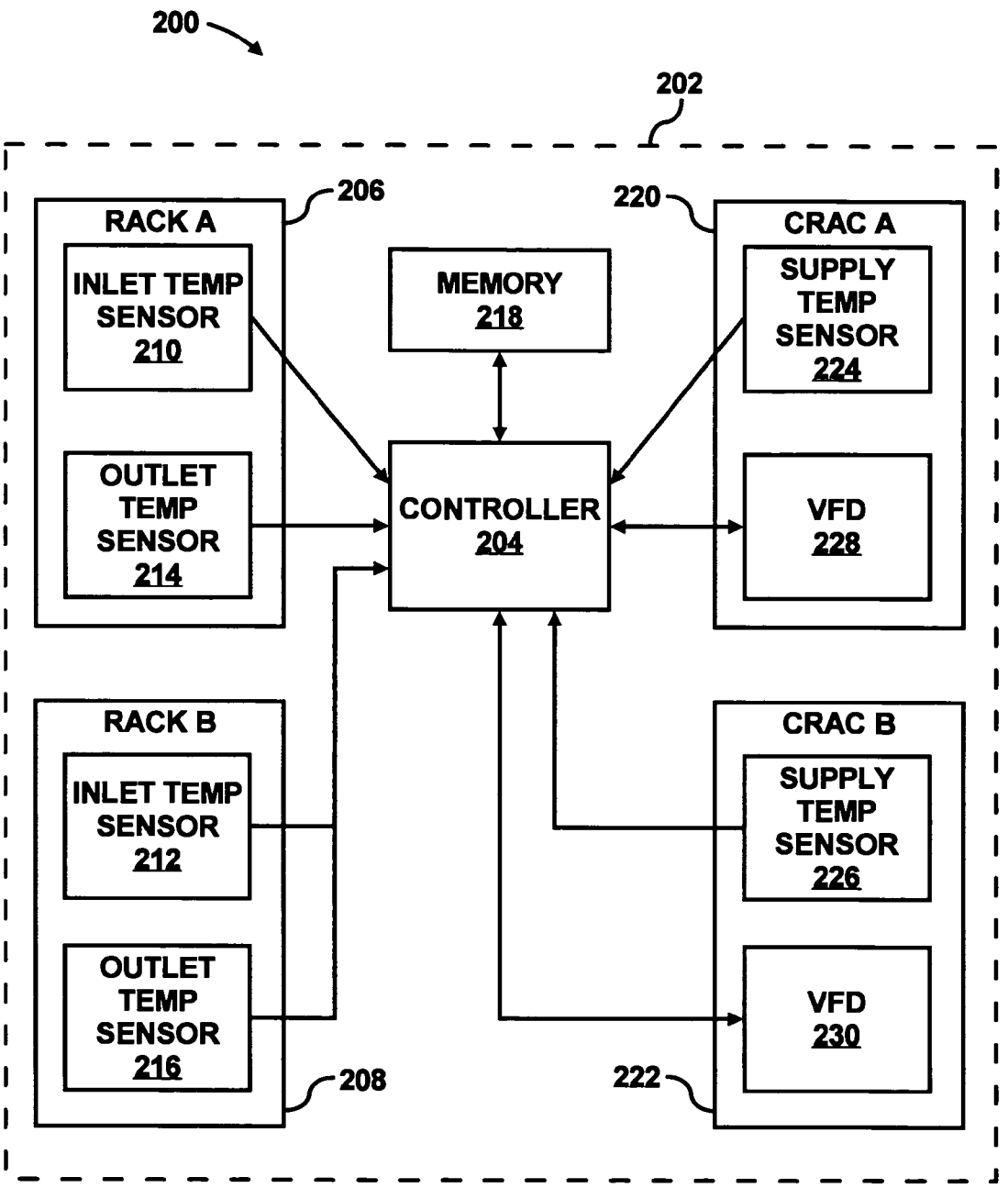
200
202
206
RACK A
INLET TEMP SENSOR 210
OUTLET TEMP SENSOR 214
MEMORY 218
CONTROLLER 204
220
CRAC A
SUPPLY TEMP SENSOR 224
VFD 228
RACK B
INLET TEMP SENSOR 212
OUTLET TEMP SENSOR 216
208
CRAC B
SUPPLY TEMP SENSOR 226
VFD 230
222

FIG. 2

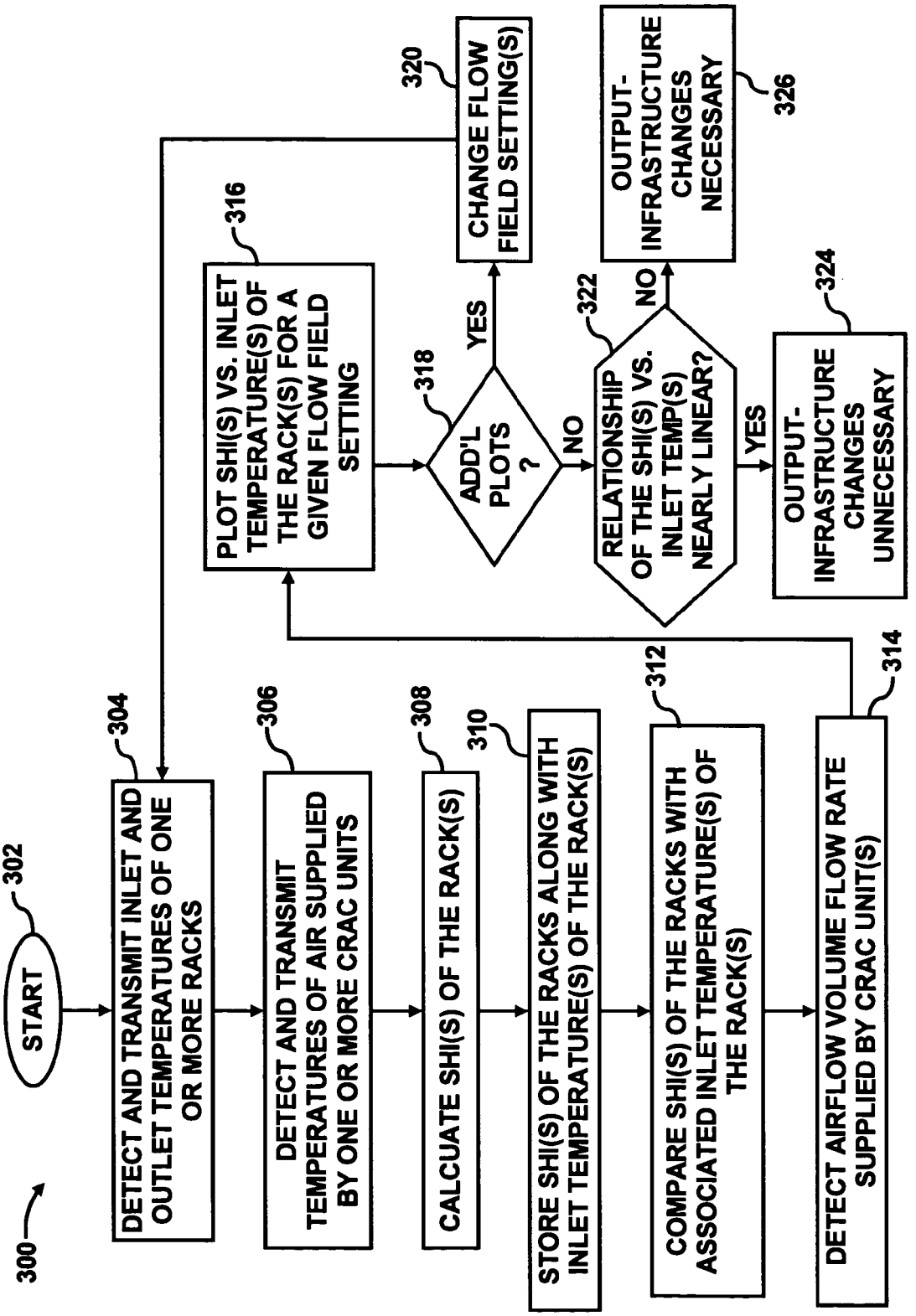
300
START
302
DETECT AND TRANSMIT INLET AND OUTLET TEMPERATURES OF ONE OR MORE RACKS
304
DETECT AND TRANSMIT TEMPERATURES OF AIR SUPPLIED BY ONE OR MORE CRAC UNITS
306
CALCUATE SHI(S) OF THE RACK(S)
308
STORE SHI(S) OF THE RACKS ALONG WITH INLET TEMPERATURE(S) OF THE RACK(S)
310
COMPARE SHI(S) OF THE RACKS WITH ASSOCIATED INLET TEMPERATURE(S) OF THE RACK(S)
312
DETECT AIRFLOW VOLUME FLOW RATE SUPPLIED BY CRAC UNIT(S)
314
PLOT SHI(S) VS. INLET TEMPERATURE(S) OF THE RACK(S) FOR A GIVEN FLOW FIELD SETTING
316
ADD'L PLOTS ?
318
YES
NO
CHANGE FLOW FIELD SETTING(S)
320
RELATIONSHIP OF THE SHI(S) VS. INLET TEMP(S) NEARLY LINEAR?
322
NO
YES
OUTPUT-INFRASTRUCTURE CHANGES NECESSARY
326
OUTPUT-INFRASTRUCTURE CHANGES UNNECESSARY
324

FIG. 3

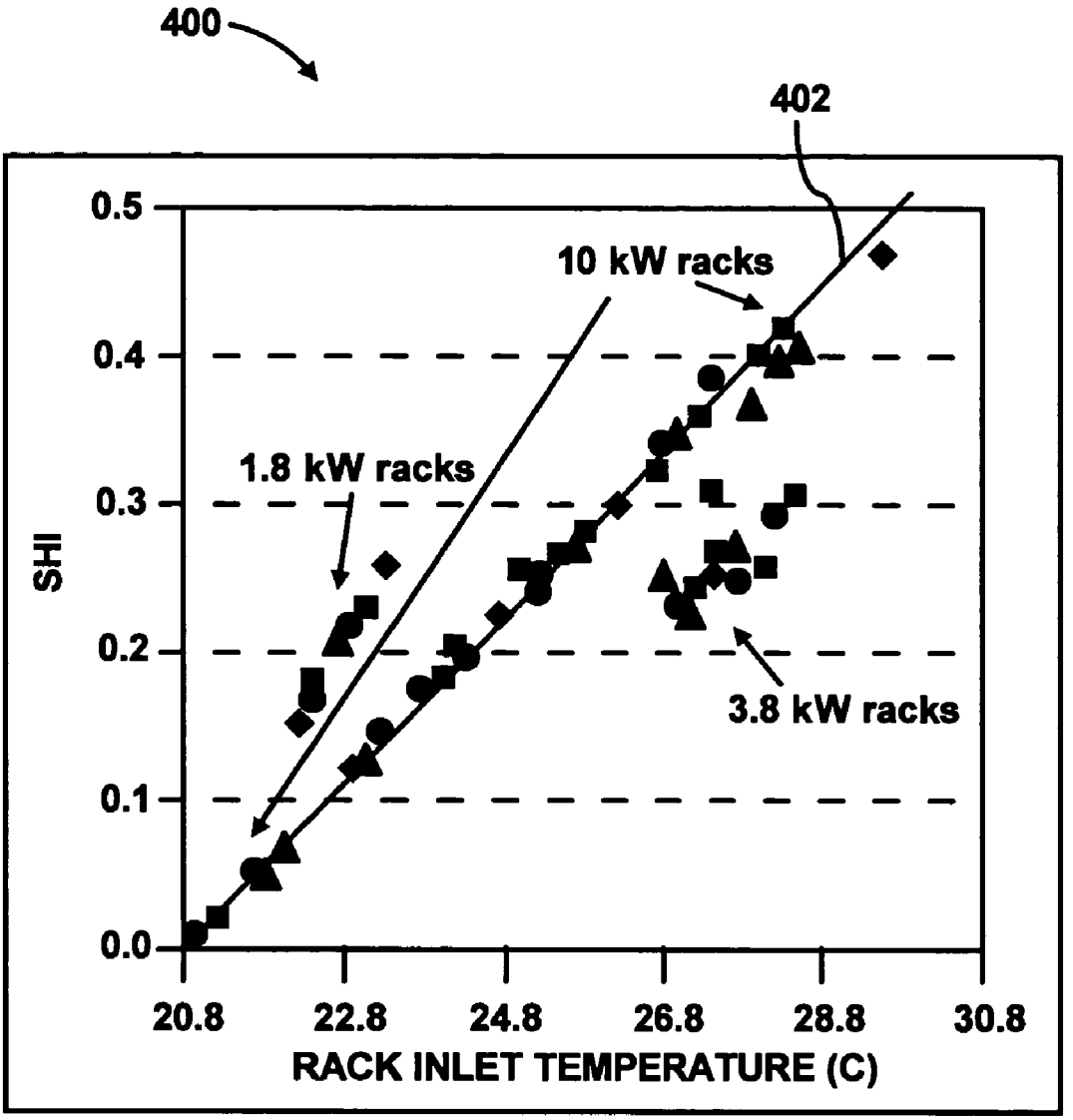
400
402
10 kW racks
1.8 kW racks
3.8 kW racks
SHI
0.5
0.4
0.3
0.2
0.1
0.0
20.8
22.8
24.8
26.8
28.8
30.8
RACK INLET TEMPERATURE (C)

FIG. 4A

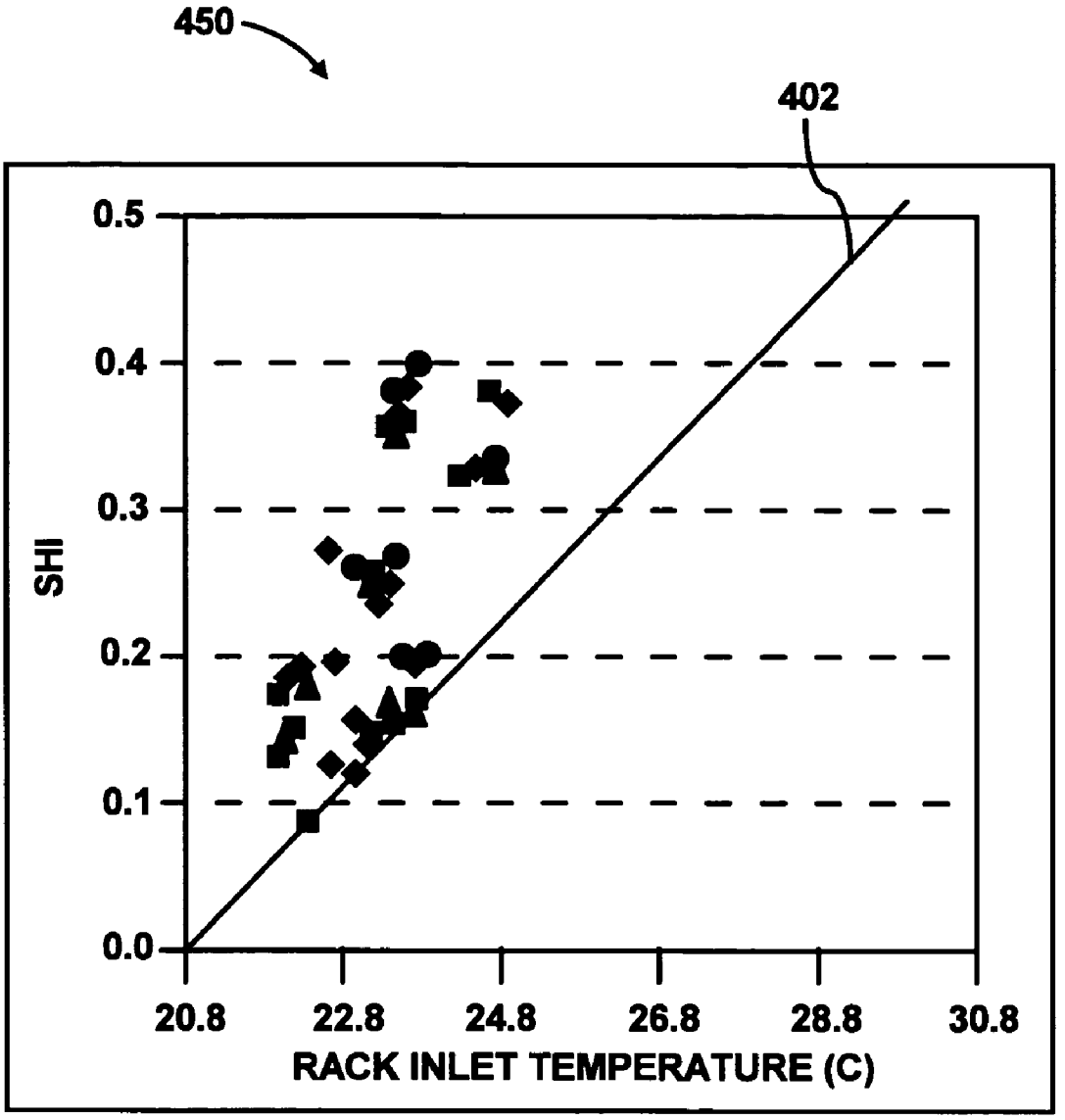
450
402
0.5
0.4
0.3
0.2
0.1
0.0
SHI
20.8
22.8
24.8
26.8
28.8
30.8
RACK INLET TEMPERATURE (C)

FIG. 4B

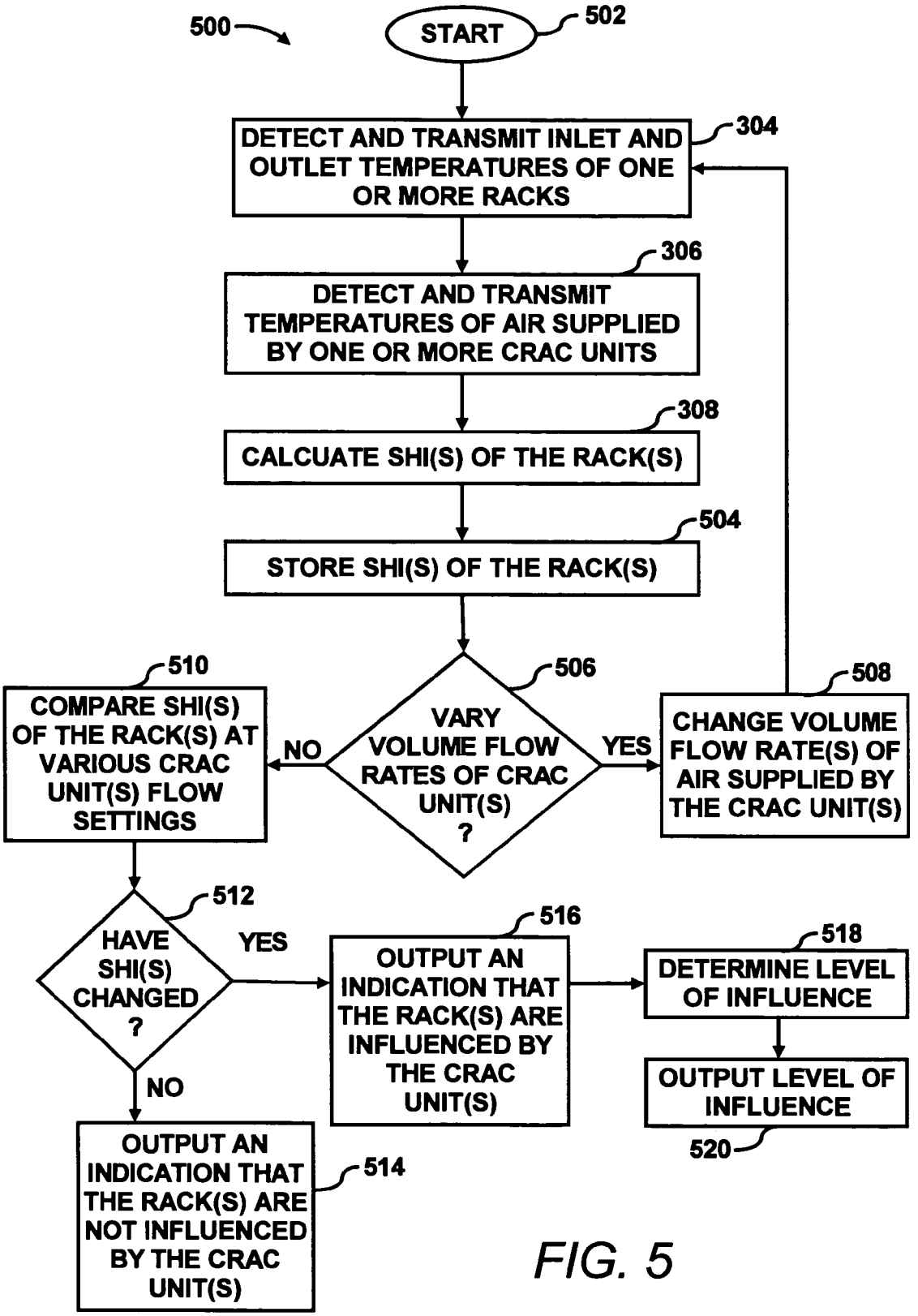
500
START
502
DETECT AND TRANSMIT INLET AND OUTLET TEMPERATURES OF ONE OR MORE RACKS
304
DETECT AND TRANSMIT TEMPERATURES OF AIR SUPPLIED BY ONE OR MORE CRAC UNITS
306
CALCUATE SHI(S) OF THE RACK(S)
308
STORE SHI(S) OF THE RACK(S)
504
VARY VOLUME FLOW RATES OF CRAC UNIT(S) ?
506
NO
YES
COMPARE SHI(S) OF THE RACK(S) AT VARIOUS CRAC UNIT(S) FLOW SETTINGS
510
CHANGE VOLUME FLOW RATE(S) OF AIR SUPPLIED BY THE CRAC UNIT(S)
508
HAVE SHI(S) CHANGED ?
512
YES
NO
OUTPUT AN INDICATION THAT THE RACK(S) ARE INFLUENCED BY THE CRAC UNIT(S)
516
DETERMINE LEVEL OF INFLUENCE
518
OUTPUT LEVEL OF INFLUENCE
520
OUTPUT AN INDICATION THAT THE RACK(S) ARE NOT INFLUENCED BY THE CRAC UNIT(S)
514

FIG. 5

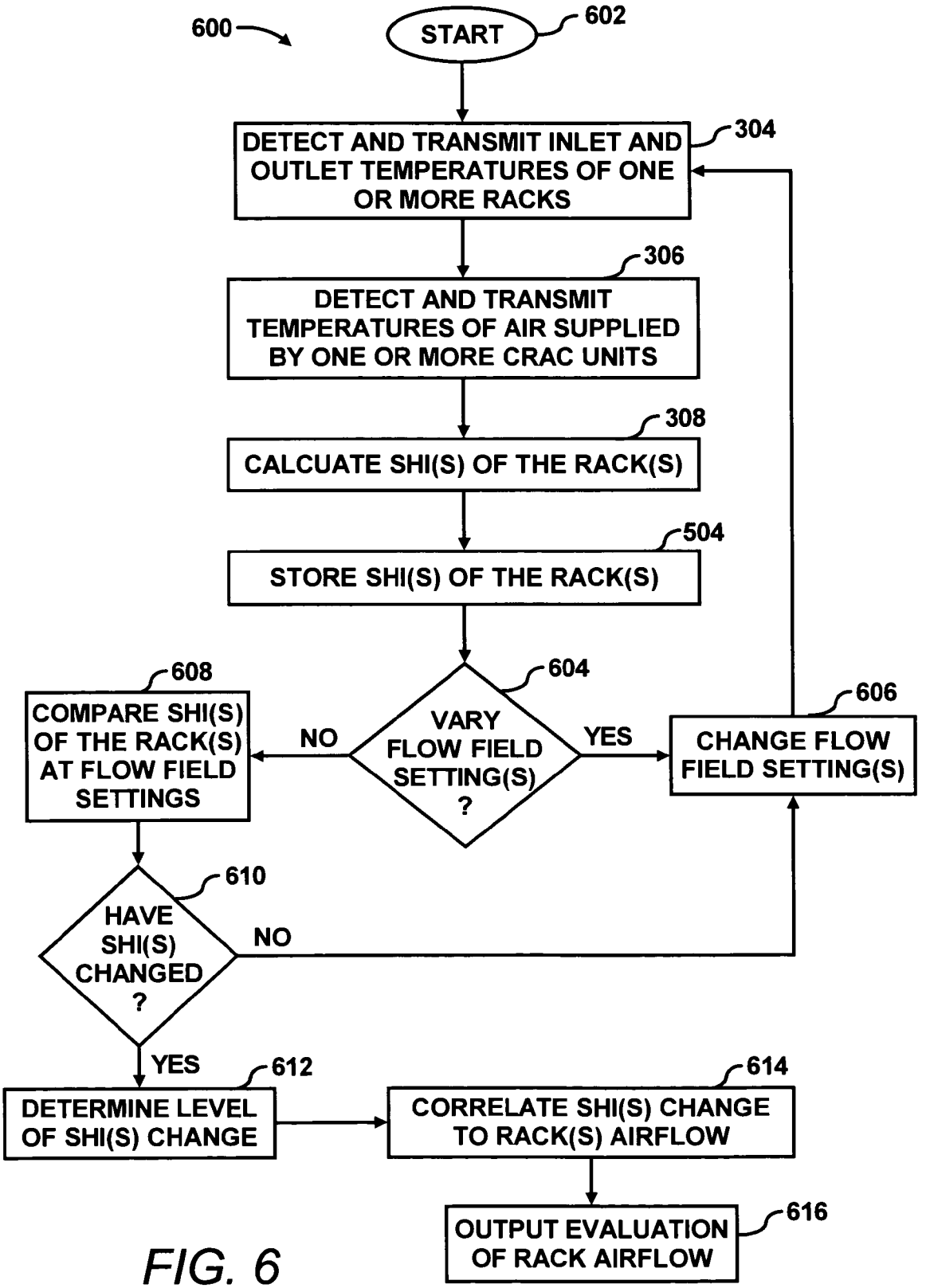
600
START
602
DETECT AND TRANSMIT INLET AND OUTLET TEMPERATURES OF ONE OR MORE RACKS
304
DETECT AND TRANSMIT TEMPERATURES OF AIR SUPPLIED BY ONE OR MORE CRAC UNITS
306
CALCUATE SHI(S) OF THE RACK(S)
308
STORE SHI(S) OF THE RACK(S)
504
VARY FLOW FIELD SETTING(S) ?
604
NO
YES
COMPARE SHI(S) OF THE RACK(S) AT FLOW FIELD SETTINGS
608
CHANGE FLOW FIELD SETTING(S)
606
HAVE SHI(S) CHANGED ?
610
NO
YES
DETERMINE LEVEL OF SHI(S) CHANGE
612
CORRELATE SHI(S) CHANGE TO RACK(S) AIRFLOW
614
OUTPUT EVALUATION OF RACK AIRFLOW
616

FIG. 6

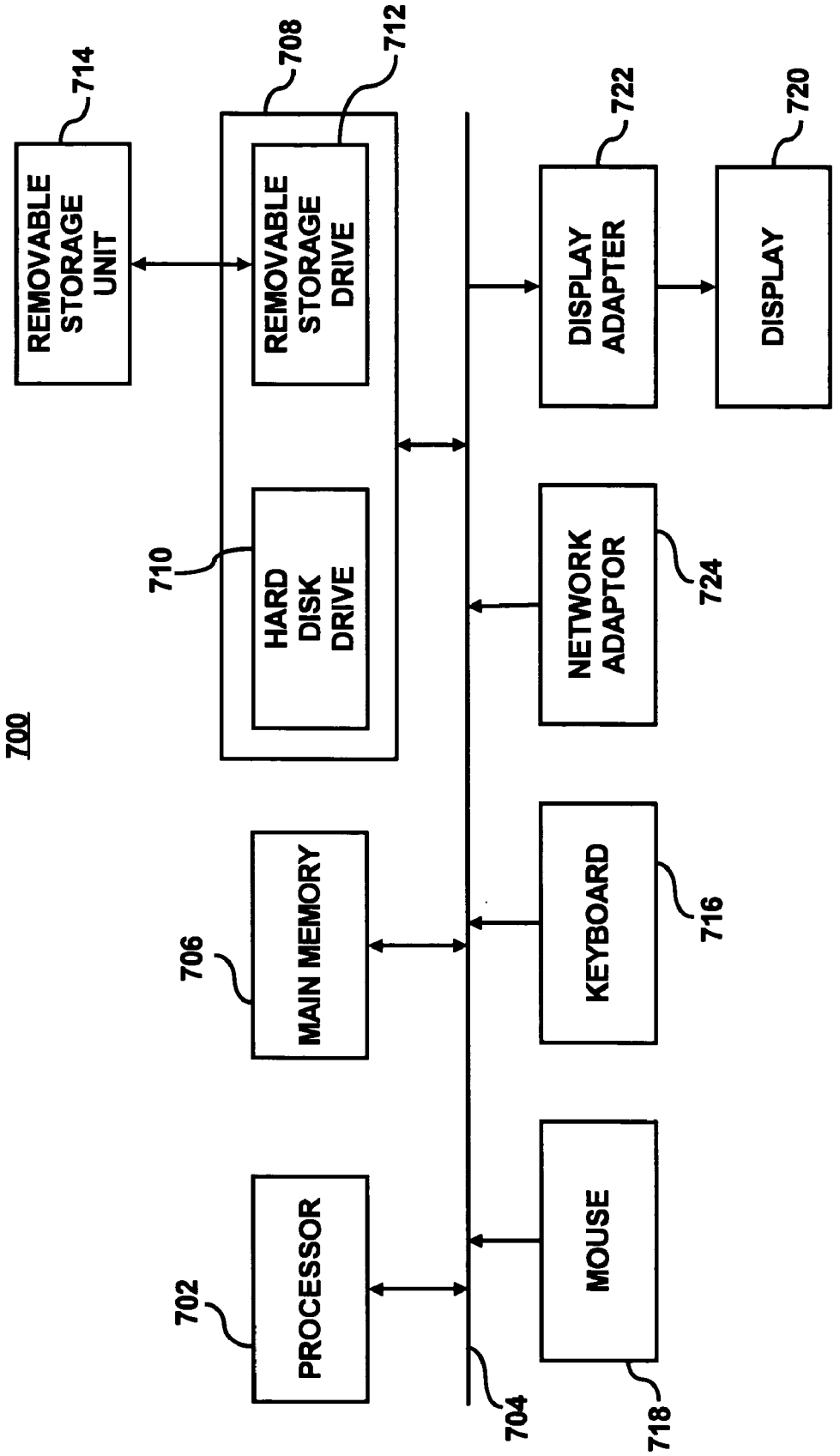
700
REMOVABLE STORAGE UNIT
714
REMOVABLE STORAGE DRIVE
708
712
HARD DISK DRIVE
710
MAIN MEMORY
706
PROCESSOR
702
704
DISPLAY ADAPTER
722
DISPLAY
720
NETWORK ADAPTOR
724
KEYBOARD
716
MOUSE
718

FIG. 7

DATA CENTER EVALUATION USING AN AIR RE-CIRCULATION INDEX

BACKGROUND OF THE INVENTION

A data center may be defined as a location, for instance, a room, that houses computer systems arranged in a number of racks. A standard rack, for example, an electronics cabinet, is defined as an Electronics Industry Association (EIA) enclosure, 78 in. (2 meters) high, 24 in. (0.61 meter) wide and 30 in. (0.76 meter) deep. These racks are configured to house a number of computer systems, about forty (40) systems, with future configurations of racks being designed to accommodate 200 or more systems. The computer systems typically include a number of printed circuit boards (PCBs), mass storage devices, power supplies, processors, micro-controllers, and semi-conductor devices, that dissipate relatively significant amounts of heat during their operation. For example, a typical computer system comprising multiple microprocessors dissipates approximately 250 W of power. Thus, a rack containing forty (40) computer systems of this type dissipates approximately 10 KW of power.

The power required to transfer the heat dissipated by the components in the racks to the cool air contained in the data center is generally equal to about 10 percent of the power needed to operate the components. However, the power required to remove the heat dissipated by a plurality of racks in a data center is generally equal to about 50 percent of the power needed to operate the components in the racks. The disparity in the amount of power required to dissipate the various heat loads between racks and data centers stems from, for example, the additional thermodynamic work needed in the data center to cool the air. In one respect, racks are typically cooled with fans that operate to move cooling air across the heat dissipating components; whereas, data centers often implement reverse power cycles to cool heated return air. The additional work required to achieve the temperature reduction, in addition to the work associated with moving the cooling fluid in the data center and the condenser, often add up to the 50 percent power requirement. As such, the cooling of data centers presents problems in addition to those faced with the cooling of the racks.

Conventional data centers are typically cooled by operation of one or more computer room air conditioning (CRAC) units. For example, compressors of CRAC units typically consume a minimum of about thirty (30) percent of the required operating energy to sufficiently cool the data centers. The other components, for example, condensers and air movers (fans), typically consume an additional twenty (20) percent of the required total operating energy. As an example, a high density data center with 100 racks, each rack having a maximum power dissipation of 10 KW, generally requires 1 MW of cooling capacity. CRAC units with a capacity of 1 MW of heat removal generally requires a minimum of 300 KW input compressor power in addition to the power needed to drive the air moving devices, for instance, fans and blowers. Conventional data center CRAC units do not vary their cooling fluid output based on the distributed needs of the data center. Instead, these CRAC units generally operate at or near a maximum compressor power level even when the heat load is reduced inside the data center.

The substantially continuous operation of the CRAC units is generally designed to operate according to a worst-case scenario. For example, CRAC units are typically designed around the maximum capacity and redundancies are utilized

so that the data center may remain on-line on a substantially continual basis. However, the computer systems in the data center may only utilize around 30–50% of the maximum cooling capacity. In this respect, conventional cooling systems often attempt to cool components that may not be operating at a level which may cause their temperatures to exceed a predetermined temperature range. Consequently, many conventional cooling systems often incur greater amounts of operating expenses than may be necessary to sufficiently cool the heat generating components contained in the racks of data centers.

Other types of conventional CRAC units are configured to vary the temperature of the cooling fluid as well as the volume flow rate of the cooling fluid supplied into the data center. These types of CRAC units often include cooling systems configured to vary the temperature of the received cooling fluid prior to delivery into the data center. The cooling systems include variable capacity compressors and chilled water systems. In addition, these CRAC units also include blowers with variable frequency drives configured to vary the volume flow rate of the cooling fluid delivered into the data center.

Conventionally, data centers are initially designed based upon uniform criteria for thermal management irrespective of rack configuration and power density. In this regard, data centers are typically designed without regard to the effects of heterogeneous heat loads and airflow. Instead, data centers are typically designed based upon intuition as the primary tool to guide the placement and re-arrangement of data center cooling infrastructures and resources. Consequently, conventional data centers oftentimes have infrastructures that are not efficiently designed for varying heat loads and airflows. In this regard, the energy required to cool the components contained in the racks is usually consumed in inefficient manners as additional energy is required to compensate for the non-optimized data center layouts.

SUMMARY OF THE INVENTION

In a method for evaluating one or more components in a data center, inlet and outlet temperatures of one or more heat dissipating devices are detected. In addition, the temperatures of air supplied by one or more computer room air conditioning (CRAC) units are also detected. Indices of air re-circulation for the one or more heat dissipating devices are calculated based upon the detected inlet temperatures, outlet temperatures and supplied air temperatures. The indices of air re-circulation are determined at various flow field settings of air delivered to the one or more heat dissipating devices and the one or more components are evaluated based upon changes in the indices of air re-circulation for the one or more heat dissipating devices at the various flow field settings.

BRIEF DESCRIPTION OF THE DRAWINGS

Features of the present invention will become apparent to those skilled in the art from the following description with reference to the figures, in which:

FIG. **1**A shows a simplified plan view of a data center, according to an embodiment;

FIG. **1**B shows a simplified cross-sectional side elevational view of FIG. **1**A taken along line IB—IB;

FIG. **2** illustrates a block diagram of a control system, which may be employed to perform various operations according to various embodiments;

FIG. **3** illustrates a flow diagram of an operational mode for determining whether substantially optimized airflow conditions exist in the data center based upon SHI determinations;

FIGS. **4**A and **4**B illustrate examples of respective graphs that may be generated based upon the SHI values and the inlet temperature values for various CRAC unit volume flow rate settings;

FIG. **5** shows a flow diagram of an operational mode for at least one of evaluating the influence of CRAC units and controlling the CRAC units based upon SHI determinations at various locations of a data center;

FIG. **6** shows a flow diagram of an operational mode for evaluating airflow through a rack based upon SHI determinations at various locations of a data center; and

FIG. **7** illustrates an exemplary computer system capable of performing various operations described hereinabove with respect to FIGS. **3**, **5**, and **6**.

DETAILED DESCRIPTION OF THE INVENTION

For simplicity and illustrative purposes, the present invention is described by referring mainly to an exemplary embodiment thereof. In the following description, numerous specific details are set forth in order to provide a thorough understanding of the present invention. It will be apparent however, to one of ordinary skill in the art, that the present invention may be practiced without limitation to these specific details. In other instances, well known methods and structures have not been described in detail so as not to unnecessarily obscure the present invention.

An index of air re-circulation is employed for various purposes in at least one of the layout design, deployment, and evaluation of data centers. In one respect, various air re-circulation indices are calculated for various flow field settings. The flow field settings may include, for instance, the volume flow rates of one or more CRAC units, the airflow characteristics through one or more vent tiles, the positions of adjustable panels or adjustable louvers configured to vary airflow into individual racks, the speeds of rack-mounted fans, etc. In addition, the one or more vent tiles may be positioned on a raised floor, a lowered ceiling, a delivery point of a ducted supply network, a return point of a ducted return network, etc. The calculated indices are plotted against inlet temperatures at various racks to determine how the indices vary with different flow field settings. In addition, the plotted relationships are examined to determine whether a linear relationship exists. Depending upon the linearity, or lack of linearity, airflow characteristics in a data center may be characterized. For instance, if it is determined that the airflow characteristics in the data center are substantially optimized, a determination that the data center infrastructure need not be modified may be made. Otherwise, if the airflow characteristics in the data center are not substantially optimized, a determination that the data center infrastructure requires modification may be made.

The index of air re-circulation may also be employed as a tool for evaluating CRAC unit influence to various areas of the data center. The various areas in the data center may include any reasonably suitable heat dissipating device or groups of heat dissipating devices, such as, for instance, racks, monitors, or other devices. In this example, correlations between air re-circulation indices and various flow rates of air supplied by one or more CRAC units may be employed to determine the influence of the one or more CRAC units to the various areas in the data center.

The index of air re-circulation may further be employed as a tool for evaluating air flow through various heat dissipating devices, such as, for instance, racks, monitors or other devices. In one regard, the manner in which the re-circulation of air varies at various racks in response to changing one or more flow field settings may be used to evaluate the airflow characteristics of the various racks.

Although reference is made throughout the present disclosure to racks, it should be understood that various aspects of the invention may be practiced with or on other types of heat dissipating devices. In this regard, it should be understood that the discussion of racks in the present disclosure is not meant to limit the invention, but that such discussion is made for purposes of simplicity of description.

With reference first to FIG. **1**A, there is shown a simplified plan view of a data center **100**, according to an embodiment. The terms "data center" are generally meant to denote a room or other space and are not meant to limit the invention to any specific type of room where data is communicated or processed, nor should it be construed that use of the terms "data center" limits the invention in any respect other than its definition hereinabove.

As shown in the FIG. **1**A, the data center **100** includes a plurality of rows of racks **102**–**114**, for instance, electronics cabinets, generally positioned in substantially parallel rows. Each of row of racks **102**–**114** is illustrated as containing five racks. With reference to the row of racks **102**, the racks forming the row of racks **102**–**114** are depicted as including racks **102***a*–**102***e*. The racks contained in each of the rows of racks **102**–**114** house one or more components (not shown). These components may include, for instance, computers, servers, monitors, hard drives, disk drives, etc., designed to perform various operations. Some operations of the components may include, for instance, computing, switching, routing, displaying, etc. These components may comprise subsystems (not shown), for example, processors, microcontrollers, high-speed video cards, memories, semiconductor devices, and the like to perform these functions. In the performance of these electronic functions, the components, and therefore the subsystems, generally dissipate relatively large amounts of heat. Because racks have been known to include upwards of forty (40) or more subsystems, they may dissipate substantially large amounts of heat. Cooled air, or other type of fluid for cooling the components, is therefore supplied to generally flow around and through the components to absorb the dissipated heat through convection, to maintain the subsystems and the components generally within predetermined operating temperature ranges.

The cooled air is illustrated as being supplied through vent tiles **116** in the floor **118** of the data center **100**. The vent tiles **116** are illustrated as being variously positioned to supply cooled air to the racks **102***a*–**114***e*. As will be seen in FIG. **1**B, the floor **118** is a raised floor with a space therebelow. The space generally enables power lines, communication lines, and other wires (not shown), to be located below the floor **118** such that the wires and communication lines are substantially positioned away from an upper surface of the floor **118**. The space may also function as a plenum for delivery of cooled air from variously positioned computer room air conditioner (CRAC) units **120***a*–**120***e* to the racks **102***a*–**114***e*.

As shown in FIG. **1**A, the CRAC units **120***a*–**120***e* are positioned to supply cooled air to various regions of the data center **100**. In addition, some of the cooled air delivered to certain sections of the data center **100** may include cooled air supplied by more than one CRAC unit **120***a*–**120***e*.

The aisles **122** between the racks **102***a*–**114***e* having vent tiles **116** located therebetween may be considered as cool aisles. These aisles **122** are considered "cool aisles" because they are configured to receive cooled air from the vent tiles **116**. The aisles **124** between the racks **102***a*–**114***e* that do not have vent tiles **116** may be considered as hot aisles because they are positioned to receive air that has been heated by the components in the racks **102***a*–**114***e*.

Also illustrated in FIG. **1**A is a computing device **126**. The computing device **126** may comprise a computer system, a controller, microprocessor, etc., configured to control operations of one or more of the CRAC units **120***a*–**120***e*. More particularly, the computing device **126** may be configured, for instance, to receive input from sensors (not shown) and to vary operations of the various variable controllable systems contained in one or more of the CRAC units **120***a*–**120***e*. The computing device **126** may also be configured to receive input from a user, for instance, data center personnel, an administrator, a manager, etc. The input received from a user may comprise various set points by which the computing device **126** may determine how and when to manipulate the operations of the variable controllable systems.

The computing device **126** may communicate with one or more of the CRAC units **120***a*–**120***e* via wired communication lines (not shown). However, it should be understood that communications between one or more of the CRAC units **120***a*–**120***e* and the computing device **126** may be effectuated through a wireless protocol, such as IEEE 802.11b, 802.11g, wireless serial connection, Bluetooth, etc., or combinations thereof, without departing from a scope of the invention. In addition, although a single computing device **126** is illustrated, each of the CRAC units **120***a*–**120***e* may include their own respective computing device **126**. Moreover, the computing device **126** may comprise controllers that are integrally formed or otherwise form part of each of the CRAC units **120***a*–**120***e*. Thus, although the data center **100** has been illustrated as containing a certain configuration, it should readily be understood that various other configurations are possible for the data center **100** without departing from a scope of the invention.

The data center **100** depicted in FIG. **1**A represents a generalized illustration and other components may be added or existing components may be removed or modified without departing from the scope of the invention. For example, the data center **100** may include any number of racks and various other apparatuses known to be housed in data centers. Thus, although the data center **100** is illustrated as containing seven rows of racks **102**–**114**, it should be understood that the data center **100** may include any number of racks, for instance, 100 or more racks, without departing from the scope of the invention. In addition, each of the rows of racks **102**–**114** may contain any number of racks. The depiction of the racks **102***a*–**114***e* is thus for illustrative and simplicity of description purposes only and is not intended to limit the invention in any respect. As another example, the data center **100** may include any number of CRAC units **120***a*–**120***e*, each having a number of different types of cooling systems.

The data center **100** may also include a lowered ceiling (not shown) configured with returns for receiving heated cooling fluid from within the data center **100**. The lowered ceiling may also include or form a plenum for directing the heated cooling fluid to the CRAC units **120***a*–**120***e*. An example of a data center **100** having a lowered ceiling may be found in co-pending and commonly assigned U.S. patent application Ser. No. 10/262,879, filed on Apr. 17, 2002, the disclosure of which is hereby incorporated by reference in its entirety.

With reference now to FIG. **1**B, there is shown a simplified cross-sectional side elevational view of FIG. **1**A taken along line IB—IB. FIG. **1**B represents a generalized illustration and other components may be added or existing components may be removed or modified without departing from the scope of the invention as described hereinabove. More particularly, FIG. **1**B shows the CRAC unit **120***d* and the racks, **102***b*, **104***b*, **106***b*, **108***b*, **110***b*.

In general, air or other cooling fluid is received by the CRAC units **120***a*–**120***e* and is cooled through heat transfer with coolant in the CRAC units **120***a*–**120***e*. In the example illustrated in FIG. **1**B, the CRAC unit **120***d* is configured as a chiller-type air conditioning unit. In this regard, the CRAC unit **120***d* includes a three-way valve **130** configured to control the flow of coolant through a cooling coil **132**. The three-way valve **130** as well as other components of the CRAC unit **120***d* may be operated in manners consistent with conventional chiller-type air conditioning units. Alternatively, the CRAC unit **120***d* may be configured as a conventional chiller-type air conditioning unit having a two-way valve. As a further alternative, the CRAC unit **120***d* may be configured as a vapor-compression type air conditioning unit in which a conventional vapor-compression cycle may be employed to cool air received into the CRAC unit **120***d*. In addition, the other CRAC units **120***a*–**120***c* and **120***e* may also be configured as chiller-type or vapor compression type of air conditioning units.

The CRAC unit **120***d* also includes a blower **134** that may be controlled to vary the volume flow rate of air delivered into a space **138** located beneath the raised floor **118**. The speed or the output of the blower **134** may be controlled through use of any reasonably suitable and commercially available variable frequency drive (VFD) **136**, which is shown as being positioned adjacent to the blower **134**. The VFD **136** generally operates to control the blower **134** to vary the volume flow rate of airflow into and out of the CRAC unit **120***d*.

The arrow **140** generally indicates the heated airflow path into the CRAC unit **120***d*. In general, through heat exchange with the coolant contained in the cooling coil **132**, heat is removed from the air received into the CRAC unit **120***d*. In addition, the cooled air is supplied into the data center **100** through operation of the blower **134**, as indicated by the arrow **142**. The computing device **126** may be configured to control the temperature of the coolant contained in the cooling coil **132** and speed of the blower **134** to thereby control the cooling of the air and the volume flow rate of the supplied air.

In certain instances, each of the CRAC units **120***a*–**120***e* may be operated in substantially independent manners. For example, one or both of the temperature and the volume flow rate of air delivered by each of the CRAC units **120***a*–**120***e* may differ for one or all of the CRAC units **120***a*–**120***e*. In one regard, one or both of the temperature and the volume flow rate of air delivered to various sections of the data center **100** may differ from one or both of the temperature and the volume flow rate of air supplied by any individual CRAC unit **120***a*–**120***e*.

The temperatures of the cooled air supplied by the CRAC units **120***a*–**120***e* may be detected by temperature sensors, for instance, the temperature sensor **144** depicted in FIG. **1**B. As shown, the temperature sensor **144**, hereinafter, supply temperature sensor **144**, is positioned to detect the temperature of the airflow supplied by the CRAC unit **120***d*.

Although the supply temperature sensor **144** is illustrated as being attached to a bottom surface of the raised floor **118** proximate the outlet of the CRAC unit **120***d*, the supply temperature sensor **144** may be positioned at any reasonably suitable location where the supply temperature sensor **144** may detect the temperature of the air supplied by the CRAC unit **120***d*. This is also true for the other CRAC units **120***a*–**120***d* and **120***e*.

Additional temperature sensors **146** and **148**, hereinafter inlet temperature sensors **146** and outlet temperature sensors **148**, are also illustrated in FIG. **1**B. As the name implies, the inlet temperature sensors **146** are configured to detect the temperatures of cooled air supplied through the vent tiles **116**. In addition, the outlet temperature sensors **148** are configured to detect the temperatures of the heated air exhausted from the racks **102***a*–**114***e*. Although not explicitly shown, some or all of the racks **102***a*–**114***e* may contain the inlet temperature sensors **146** and the outlet temperature sensors **148**. Through use of the inlet temperature sensors **146** and the outlet temperature sensors **148**, the changes in temperatures of the airflow through individual racks **102***a*–**114***e* equipped with the sensors **146**, **148** may be determined. The placements of the inlet temperature sensors **146** and the outlet temperature sensors **148** with respect to their associated racks **102***a*–**102***e* are for illustrative purposes only and are not meant to limit the data center **100** in any respect. Instead, the inlet temperature sensors **146** and the outlet temperature sensors **148** may be positioned at any reasonably suitable locations without departing from a scope of the data center **100**.

Although reference is made in FIG. **1**B to the use of the blower **134** to draw heated air from the data center **100**, it should be understood that any other reasonably suitable manner of heated air removal from the data center **100** may be implemented without departing from the scope of the invention. By way of example, a separate fan or blower (not shown) may be employed to draw the heated air from the data center **100**. In addition, the CRAC units **120***a*–**120***d* may include at least one of a humidifier and a dehumidifier as is known to those of ordinary skill in the art.

FIG. **2** illustrates a block diagram **200** of a control system **202** which may be employed to perform various operations according to various embodiments. The following description of the block diagram **200** is one manner of a variety of different manners in which such a control system **202**, may be configured. In addition, it should be understood that the block diagram **200** may include additional components and that some of the components described herein may be removed or modified without departing from the scope of the invention.

The control system **202** includes a controller **204** for controlling various operations of the control system **202**. The controller **204** may, for instance, comprise the computing device **126** and thus may also comprise a microprocessor, a micro-controller, an application specific integrated circuit (ASIC), and the like. The controller **204** may, alternatively, comprise a separate computing device.

As shown, the controller **204** is configured to receive temperature data from two racks, rack A **206** and rack B **208**, which may be configured as any of the racks **102***a*–**114***e* depicted in FIGS. **1**A and **1**B. Each of the racks **206** and **208** is configured with respective inlet temperature sensors **210** and **212** and respective outlet temperature sensors **214** and **216**. The temperature measurements obtained by the sensors **210**–**216** are sent to the controller **204**. Information from the sensors **210**–**216** may be sent to the controller **204** through, for instance, an Ethernet-type connection or through a wired protocol, such as IEEE 802.3, etc., or wireless protocols, such as IEEE 802.11b, 802.11g, wireless serial connection, Bluetooth, etc., or combinations thereof. Although two racks **206** and **208** are depicted in FIG. **2**, the controller **204** may be configured to receive temperature data from temperature sensors **146**, **148** positioned around any number of racks, including all of the racks **102***a*–**114***e* shown in FIGS. **1**A and **1**B.

The controller **204** may store these measurements in a memory **218**. The memory **218** may also store programs or other software, which the controller **204** may access in performing various operations as described in greater detail hereinbelow. In any regard, the memory **218** may comprise a traditional memory device, such as, volatile or non-volatile memory, such as DRAM, EEPROM, flash memory, combinations thereof, and the like.

As also shown in FIG. **2**, the controller **204** is configured to receive various data from two CRAC units, CRAC unit A **220** and CRAC unit B **222**, which may be configured as any of the CRAC units **120***a*–**120***e* shown in FIG. **1**A. Although two CRAC units **220** and **222** are depicted in FIG. **2**, the controller **204** may be configured to receive data from any number of CRAC units, including all of the CRAC units **120***a*–**120***e* shown in FIG. **1**A. In any regard, the CRAC units **220** and **222** are configured with respective supply temperature sensors **224** and **226**. The temperature measurements obtained by the supply temperature sensors **224** and **226** are sent to the controller **204**. The CRAC units **220** and **222** are also configured with respective VFDs **228** and **230**.

The controller **204** may be configured to operate the VFDs **228** and **230** to vary the volume flow rate of air supplied by each of the CRAC units **228** and **230**. In addition, the volume flow rates may be calculated by the controller **204** through a determination of the VFD **228** and **230** speeds. Alternatively, the volume flow rates may be detected through use of separate sensors, for instance, anemometers positioned to detect the velocities of the supply air. Information from the supply temperature sensors **224** and **226** and the VFDs **228** and **230** may be sent to the controller **204** through, for instance, an Ethernet-type connection or through a wired protocol, such as IEEE 802.3, etc., or wireless protocols, such as IEEE 802.11b, 802.11g, wireless serial connection, Bluetooth, etc., or combinations thereof. In addition, the controller **204** may be configured to store the information received from the supply temperature sensors **224** and **226** and the VFDs **228** and **230** in the memory **218**.

The memory **218** may also store an algorithm, for instance, in the form of software, configured to calculate an air re-circulation index based upon some of the information received from the inlet temperature sensors **210** and **212**, the outlet temperature sensors **214** and **216** and the supply temperature sensors **224** and **226**. The index of air re-circulation may be defined as a supply heat index (SHI). The SHI may be defined as a measure of the infiltration of heated air into the cooled air. The SHI of a particular rack (i) may be determined according to the following equation:

$$(SHI)_i = \frac{\delta Q}{Q + \delta Q} \qquad \text{Equation (1)}$$

Where Q represents the heat dissipation from all the components in the rack (i) and δQ represents the rise in enthalpy of the cooled air before entering the rack (i).

The heat dissipation Q and the rise in enthalpy of the air δQ of the rack (i) may be determined through the following equations:

$$Q_i = mC_p(T_{out} - T_{in}) \quad \text{Equation (2)}$$

$$\delta Q_i = mC_p(T_{in} - T_{ref}) \quad \text{Equation (3)}$$

Where m is the mass flow rate through the rack (i), C_p is the specific heat capacity of the air supplied to the rack (i), and (T_{in}) and (T_{out}) are the inlet and outlet temperatures of the rack (i). In addition, T_{ref} denotes the vent tile **116** air supply temperature, which may be equivalent to the supply air temperature of the CRAC unit **120***a*–**120***e* in closest proximity to the rack (i). Incidentally, and as discussed hereinabove, the supply air temperatures may differ due to differences in the supply air temperatures of the CRAC units **120***a*–**120***e*.

The numerator in equation 1 denotes the sensible heat gained by the air supplied by the CRAC units **120***a*–**120***e* before entering the rack (i), while the denominator represents the sensible heat gained by the air leaving the rack (i). Because the mass flow rates are equal for equations 2 and 3, SHI may be written as a function of rack inlet, rack outlet and CRAC unit **120***a*–**120***e* supply temperatures. Thus, SHI may be represented as follows:

$$SHI_i = \left(\frac{T_{in} - T_{ref}}{T_{out} - T_{ref}}\right) \quad \text{Equation 4}$$

A more detailed description of SHI may be found in co-pending and commonly assigned U.S. patent application Ser. No. 10/446,854, filed on May 29, 2003. The disclosure contained in that Application is incorporated herein by reference in its entirety.

Thus, for instance, the controller **204** may determine the SHIs for the racks **206** and **208** through implementation of the algorithm described hereinabove. As an example, the controller **204** may determine the SHI for rack A **206** based upon the inlet temperature measured by the inlet temperature sensor **210**, the outlet temperature measured by the outlet temperature sensor **214**, and the reference or supply temperatures of one or both of the CRAC units **220** and **222**. The reference or supply temperature used in the SHI calculations for the racks **206** and **208** may be determined in a variety of manners. For instance, if it is known that a particular rack **206** or **208** receives cooled air from a single CRAC unit **220** or **222**, the temperature of the cooled air supplied by that CRAC unit **220** or **222** may be used as the reference temperature in determining SHI. Thus, the reference or supply temperature used in the SHI calculations may be based upon historical data. Alternatively, a sensor may be positioned to detect the temperature of the cooled air supplied through a vent tile **116** arranged supply a particular rack **206** or **208** with the cooled air. In this example, the temperature detected by that sensor may be used as the reference or supply temperature.

As another example, a metric may be developed that describes the effect of any CRAC unit **220**, **222** on a rack **206**, **208**. In this example, the metric may be developed through perturbation of CRAC **220**, **222** air supply temperature by predefined amounts along with detection of temperatures at the inlets of the racks **206**, **208**. Based upon the supply air temperature and the detected inlet temperature, a sensitivity correlation may be developed with cooled air temperature and flow rate as variables. In addition, metrics from various CRAC units **220**, **222** may be combined to determined combined effects on inlet temperatures to various racks **206**, **208**. The sensitivity correlation may be used to determine the effects of various CRAC units **220**, **222** on particular racks **206**, **208** and the reference or supply temperature used in the SHI calculation may be determined through implementation of the sensitivity correlation.

The memory **218** may also store additional algorithms or software configured to perform various operations as will be described in greater detail with reference to the following operational modes.

FIG. **3** illustrates a flow diagram of an operational mode **300** for determining whether substantially optimizied airflow conditions exist in the data center **100** based upon SHI determinations. It is to be understood that the following description of the operational mode **300** is one manner of a variety of different manners in which the airflow in the data center **100** may substantially be optimized. It should also be apparent to those of ordinary skill in the art that the operational mode **300** represents a generalized illustration and that other steps may be added or existing steps may be removed, modified or rearranged without departing from a scope of the invention.

The description of the operational mode **300** is made with reference to the block diagram **200** illustrated in FIG. **2**, and thus makes reference to the elements cited therein. It should, however, be understood that the operational mode **300** is not limited to the elements set forth in the block diagram **200**. Instead, it should be understood that the operational mode **300** may be practiced by control systems having different configurations than the configuration set forth in the block diagram **200**.

The operational mode **300** may be initiated or started at step **302**, for instance, by activating one or more CRAC units **220**, **222**, activating one or more components in the data center **100**, etc. In addition, or alternatively, the operational mode **300** may be manually initiated, after a predetermined period of time, etc.

At step **304**, the temperatures of the airflow delivered into one or more racks **206**, **208** may be detected with respective inlet temperature sensors **210**, **212**. In addition, the temperatures of the airflow exhausted from one or more racks **206**, **208** may be detected with respective outlet temperature sensors **214**, **216**. These temperature measurements may be sent to the controller **204** as described hereinabove. In addition, the controller **204** may store the received information along with the associated rack **206**, **208** from which the information was received. In this regard, the inlet temperatures and the outlet temperatures of each rack **206**, **208** may be stored along with their associated rack **206**, **208**. This information may be stored, for instance, in the form of a look-up table that associates the racks **206**, **208** along with their inlet and outlet temperatures.

The controller **204** may also receive the temperatures of air supplied by one or more CRAC units **220**, **222** detected by respective supply temperature sensors **224**, **226**, at step **306**. The controller **204** may store this information in the memory **218** along with the identifications of the one or more CRAC units **220**, **222** associated with the temperature sensors **224**, **226**. Again, this information may be stored, for instance, in the form of a look-up table that associates the CRAC units **220**, **222** with the temperature measurements.

At step **308**, the controller **204** may calculate the SHIs of the one or more racks **206**, **208** in a manner as described hereinabove with respect to FIG. **2**. More particularly, for a particular rack, the controller **204** may calculate the difference in inlet temperature and reference temperature (supply

temperature) divided by the difference in outlet temperature and the reference temperature (supply temperature). The controller **204** may also store the calculated SHIs for the various racks **206**, **208** in the memory **218** in addition to the inlet temperatures of the various racks **206**, **208**, as indicated at step **310**.

At step **312**, the controller **204** may compare the SHI(s) of the various racks **206**, **208** with their associated inlet temperatures. The controller **204** may further store this comparison in the memory **218**. At step **314**, the controller **204** may also receive information pertaining to the volume flow rate of air supplied by one or more CRAC units **220**, **222**. The controller **204** may determine the volume flow rate through a correlation between the VFD **228**, **230** speed and the known volume flow rate of air at the detected VFD **228**, **230** speed. The correlation between the VFD **228**, **230** speed and the volume flow rate may be supplied by the VFD **228**, **230** manufacturer or it may determined through testing of the VFD **228**, **230**. Alternatively, a separate sensor (not shown), for instance, an anemometer, may be employed to detect the velocity of airflow and a volume flow rate may be calculated through any reasonably suitable known means. In any regard, the controller **204** may store the volume flow rate information of the one or more CRAC units **220**, **222** in the memory **218**.

The controller **204** may create a plot of the SHI(s) vs. the inlet temperature(s) of the various racks **206**, **208** for a given flow field setting, at step **316**. In addition, at step **318**, the controller **204** may determine whether additional plots should be obtained. If additional plots are to be obtained, the controller **204** may control or otherwise cause one or more flow field settings to be changed at step **320**. The flow field settings may include the volume flow rates of one or more CRAC units **220**, **222**, the airflow characteristics through one or more vent tiles **116**, the positions of adjustable panels or adjustable louvers configured to vary airflow into individual racks, the speeds of rack-mounted fans, etc. In addition, the one or more vent tiles may be positioned on a raised floor, a lowered ceiling, a delivery point of a ducted supply network, a return point of a ducted return network, etc. The adjustable panels were described in co-pending and commonly assigned U.S. patent application Ser. No. 10/425,624, and the adjustable louvers were described in co-pending and commonly assigned U.S. patent application Ser. No. 10/425,621, both of which were filed on Apr. 30, 2003. In addition, the disclosures of these applications are incorporated herein by reference in their entireties.

The changes to airflow characteristics through one or more vent tiles **116** may be performed either manually or through use of computer controlled vent tiles. An example of computer controlled vent tiles may be found in commonly assigned U.S. Pat. No. 6,574,104, the disclosure of which is incorporated herein by reference in its entirety. In addition, steps **304**–**320** may be repeated for the various flow field settings. In this regard, the SHI values and the inlet temperature values may be plotted for various CRAC unit **220**, **222** supply volume flow rates. FIGS. **4**A and **4**B illustrate examples of respective graphs **400** and **450** that may be generated by the controller **204** based upon the SHI values and the inlet temperature values for various flow field settings.

When the re-circulation heat load caused by hot air infiltration is negligible compared to the actual heat loads, equation (1) may be reduced to a linear equation in SHI, as follows:

$$SHI_i = \left(\frac{T_{in} - T_{ref}}{(T_{out} - T_{in}) + (T_{in} - T_{ref})}\right) \approx \frac{\delta Q}{Q} = \frac{T_{in} - T_{ref}}{X_i} \quad \text{Equation (5)}$$

Where $X_i=(T_{out}-T_{in})$ denotes the temperature difference due to actual heat load of the ith rack. FIG. **4**A shows the variation of SHI based upon equation (1) with rack inlet temperatures for racks in a row for different flow field settings. The linear dependence of the plots in FIG. **4**A follows the relationship shown in equation (2), thereby indicating that the re-circulation heat load is negligible relative to the actual heat loads in the racks.

For the plots in graphs **400** and **450**, the racks were held under constant heat loads for the various CRAC unit **220**, **222** flow settings. In addition, a reference straight line **402** is illustrated to show, for instance, that the SHI vs. inlet temperature plots for the rack(s) having 10 kW heat loads is nearly linear in the graph **400**. More particularly, at the various CRAC unit **220**, **222** flow settings as indicated by the different symbols, the SHI values vs. the inlet temperatures are nearly linear for the racks.

The graphs **400** and **450** show respective relationships between SHI values and rack inlet temperatures for a plurality of racks at various flow field settings. Each of the different symbols represents a different flow field setting. In addition, each of the symbols may represent one or more racks at the different flow field settings. Thus, for instance, one circle in the graph **400** may represent a first rack or racks and another circle may represent a second rack or racks at a first flow field setting. In addition, a square may represent the first rack(s) at and another square may represent the second rack(s) at a second flow field setting.

In comparing the graphs **400** and **450**, it is clearly evident that the plots in graph **400** are nearly linear whereas the plots in graph **450** are not arranged in a linear relationship. Thus, the graph **450** generally denotes that the re-circulation heat load caused by hot air infiltration is significant compared to the actual heat loads. Therefore, the graph **450** generally indicates that there may be adverse airflow patterns in the data center **100** which may lead to, for instance, inefficient CRAC unit **220**, **222** operations as well as inefficient heat removal from the racks.

Referring back to FIG. **3**, particularly to step **318**, if no additional plots are to be obtained, for instance, a predetermined number of SHI and inlet temperature values have been obtained, the graph, for instance, as illustrated in the graphs **400** and **450**, may be analyzed to determine whether the relationships between the SHI values and the inlet temperatures are nearly linear at step **322**. As shown in FIG. **4**A, the plots of the SHI values and the inlet temperatures for various racks at various supply volume airflow rates are nearly linear for racks having different heat loads. Thus, linearity may be determined through a visual inspection of the graph.

Alternatively, the degree of linearity among the plots may be computed according to the square of the correlation coefficient (R). The correlation coefficient (R) defines the degree of linear relationship between variables measured from an original data and can range from 0, which is completely non-linear to 1, which is completely linear. Based upon the plots in the graph, either graph **400** or **450**, a correlation coefficient may be calculated. In addition, an error factor may be considered in determining whether the plots are nearly linear. Thus, for instance, even if the square

of the correlation coefficient (R) does not equal 1, if it is nearly equal to one, for instance, if $R^2>0.9$, the plots may be considered as being nearly linear. The determination of the acceptable level of deviation from $R^2=1$ while still considering the plots to be nearly linear may be based upon a number of factors.

By way of example, a relatively arbitrary correlation coefficient, for instance, 0.9, may be selected as a lower boundary for considering the plots as being nearly linear. As another example, the lower boundary for the correlation coefficient may be determined through testing configured to indicate correlations between acceptable SHI levels and correlation coefficients. As a further example, the lower boundary for the correlation coefficient may be based upon known uncertainties in the determination of the SHI values inputted into the graph. In this example, for instance, the degree of uncertainty in measuring one or more of the inlet temperatures, the outlet temperatures, and the supply air temperatures may be used to determine the lower boundary for the correlation coefficient.

Regardless of the manner in which the lower boundary for the correlation coefficient is defined, the correlation coefficients for plots obtained for various locations in the data center **100** need not be the same for the various locations.

If, at step **322**, it is determined that the relationship between the SHI(s) vs. the inlet temperatures of the racks is nearly linear, for instance, as shown in FIG. **4**A, the controller **204** may be configured to output an indication that the data center **100** infrastructure need not be changed as step **324**. The data center **100** infrastructure may include the positioning of the CRAC units **220**, **222**, the vent tiles **116**, the racks **206**, **208**, etc. In any regard, as described hereinabove with respect to FIG. **4**A, nearly linear SHI vs. inlet temperature values is an indication that the re-circulation heat load caused by hot air infiltration is negligible compared to the actual heat loads. In other words, the data center **100** layout may be considered as being nearly optimized in terms of airflow optimization.

Alternatively, if at step **322**, it is determined that the relationship between the SHI(s) vs. the inlet temperatures of the racks is not nearly linear, for instance, as shown in FIG. **4**B, the controller **204** may output an indication that the data center **100** infrastructure requires changes at step **326**. As described hereinabove with respect to FIG. **4**B, this situation is indicative of re-circulation heat load due to hot air infiltration being significant compared with the actual heat loads in the racks. In one regard, the infrastructure changes may be made to substantially reduce SHI values as well as to obtain plots having nearly linear SHI vs. inlet temperature values to thus substantially optimize airflow in the data center **100**.

Through implementation of the operational mode **300**, airflow characteristics in the data center **100** may be determined and substantially optimized to reduce or minimize, for instance, hot air re-circulation into the racks.

A computational fluid dynamics (CFD) tool programmed to model airflow patterns for various data center configurations may be employed to perform the operational mode **300**. More particularly, the CFD tool may be programmed to calculate the SHI values for various areas in the variously configured data centers based upon different CRAC flow settings and to plot the calculated SHI values as shown in FIGS. **4**A and **4**B. By way of example, some or all of the inputs, for instance, heat loads in the racks, volume flow rates of air supplied by one or more CRAC units, the layout of the data center, etc., may be manually inputted into the CFD tool. In this regard, the CFD tool may be configured to determine various variables, such as, rack inlet and outlet temperatures, volume flow rates, SHI values, etc., based upon calculated airflow characteristics in the data center **100** and the inputted information.

In addition, the CFD tool may be programmed to determine whether the plots denote a nearly linear relationship. In one regard, if the plots do not denote a nearly linear relationship, the CFD tool may be programmed to substantially continuously re-configure the data center infrastructure until a nearly linear relationship is established. Consequently, a CFD tool employing the operational mode **300** may be used as a tool for designing the layout of the data center, such that, for instance, airflow in the data center may be substantially optimized.

With reference now to FIG. **5**, there is shown a flow diagram of an operational mode **500** for at least one of evaluating the influence of CRAC units **220**, **222** and controlling the CRAC units **220**, **222** based upon SHI determinations at various locations of a data center **100**. It is to be understood that the following description of the operational mode **500** is one manner of a variety of different manners in which the airflow in the data center **100** may substantially be optimized. It should also be apparent to those of ordinary skill in the art that the operational mode **500** represents a generalized illustration and that other steps may be added or existing steps may be removed, modified or rearranged without departing from a scope of the invention.

The description of the operational mode **500** is made with reference to the block diagram **200** illustrated in FIG. **2**, and thus makes reference to the elements cited therein. It should, however, be understood that the operational mode **500** is not limited to the elements set forth in the block diagram **200**. Instead, it should be understood that the operational mode **500** may be practiced by control systems having different configurations than the configuration set forth in the block diagram **200**.

The operational mode **500** may be initiated or started at step **502**, for instance, by activating one or more CRAC units **220**, **222**, activating one or more components in the data center **100**, etc. In addition, or alternatively, the operational mode **500** may be manually initiated, after a predetermined period of time, etc.

Steps **304**–**308** are the same as those steps described hereinabove with respect to FIG. **3**. Therefore, a detailed description of these steps is not reproduced. Instead, the description of steps **304**–**308** set forth hereinabove is relied upon as providing sufficient disclosure of these steps.

At step **504**, the SHI value(s) of one or more racks **206**, **208** calculated at step **308** are stored in the memory **218**. At step **506**, it is determined whether the volume flow rates of one or more CRAC units **220**, **222** is to be varied. The volume flow rate of air supplied by at least one CRAC unit **220**, **222** is varied during a first iteration of the operational mode **500**. However, the volume flow rates of one or more CRAC units **220**, **222** may not necessarily be changed during further iterations of the operational mode **500**. For instance, a "no" condition at step **506** may be reached after a predetermined number of iterations, or more particularly, when a predetermined number of SHI calculations have been obtained. The predetermined number of iterations may be based upon, for instance, the level of accuracy desired in determining whether certain racks **206**, **208** are influenced by certain CRAC units **220**, **222**. Thus, for instance, a greater number of iterations may be performed to obtain greater accuracy.

It may be beneficial to vary the volume flow rates of air supplied by one or more CRAC units **220**, **222** without varying the temperatures of the air. In one regard, CRAC units **220**, **222** are typically configured to dehumidify or humidify the air based in conjunction with varying airflow temperatures. Therefore, by limiting the changes to volume flow rates of air supplied by the one or more CRAC units **220**, **222**, dehumidifying and humidifying operations may substantially be avoided.

If it is the first iteration of the operational mode **500** or if it is determined that the volume flow rate of at least one CRAC unit **220**, **222** is to be varied, the volume flow rates of one or more CRAC units **220**, **222** may be varied at step **508**. The determination of the volume flow rate of which CRAC unit **220**, **222** to vary may be based upon whether it is desired to know which of the CRAC units **220**, **222** has influence over a particular area or particular racks **206**, **208**. Thus, for instance, if it is desired to determine whether the CRAC unit **220** has influence over the rack **206**, the volume flow rate of air supplied by that CRAC unit **220** may be varied and the SHI of that rack **206** may be determined and stored as indicated at steps **304**–**308** and **504**. Steps **506** and **508** may be performed any number of times as indicated hereinabove. In addition, the flow rates of at least one of the CRAC units **220**, **222** may be changed to perturb existing airflow patterns in relatively small amounts. In other words, the perturbation caused by the changes in the flow rates of at least one of the CRAC units **220**, **222** may be performed, not to create a different flow pattern but to alter the extent and magnitude of existing flow patterns.

If, at step **506**, it is determined that the volume flow rates of air supplied by one or more CRAC units **220**, **222** is not to be varied, the controller **204** may compare the stored SHI values of the areas or one or more racks **206**, **208** at the various CRAC unit **220**, **222** flow settings, as indicated at step **510**. The determination to not vary the volume flow rates of the one or more CRAC units **220**, **222** may be reached when, for instance, sufficient SHI values have been calculated to achieve a predetermined level of accuracy in determining the influence of the CRAC units **220**, **222** on the various areas or racks **206**, **208**.

At step **512**, the controller **204** may determine whether the SHI levels for one or more areas have changed for at least two different CRAC unit **220**, **222** flow settings. If no change is detected at step **512**, the controller **204** may output an indication that the one or more areas are not influenced by the one or more CRAC units **220**, **222** whose flow settings were changed, at step **514**. Thus, for instance, if the SHI levels in a particular area have not changed in response to a change in the volume flow rate of at least one CRAC unit **220**, **222**, it may be assumed that one or more of the CRAC units **220**, **222** do not influence the one or more areas. In addition, it may be assumed that changes in the outputs of these one or more CRAC units **220**, **222** will not affect the cooling of these one or more areas. Therefore, as these one or more areas undergo varying heat load conditions, these one or more CRAC units **220**, **222** do not necessarily have to be manipulated to compensate for these changing heat load conditions.

If, at step **512**, the controller **204** determines that the SHI levels for the one or more areas have changed, the controller **204** may output an indication that the one or more areas are influenced by the one or more CRAC units **220**, **222** whose flow settings were changed, at step **516**. Thus, for instance, if the SHI levels in a particular area have changed in response to a change in the volume flow rate of at least one CRAC unit **220**, **222**, it may be assumed that one or more of the CRAC units **220**, **222** have influence over the one or more areas. In addition, it may be assumed that changes in the outputs of these one or more CRAC units **220**, **222** will affect the cooling of these one or more areas. Therefore, as these one or more areas undergo varying heat load conditions, these one or more CRAC units **220**, **222** may be manipulated to compensate for these changing heat load conditions.

In addition to step **516**, the controller **204** may determine the level of influence over the one or more areas by the one or more CRAC units **220**, **222** at step **518**. Moreover, the controller **204** may output an indication of the level of influence over one or more areas by one or more CRAC units **220**, **222** at step **520**. Thus, for instance, the controller **204** may determine the levels of SHI level changes and correlate that to the level of influence of the one or more CRAC units **220**, **222**. By way of example, the controller **204** may determine that one or more of the CRAC units **220**, **222** have greater levels of influence if the changes in SHI levels are greater in response to changes in the volume flow rates of air supplied by those one or more CRAC units **220**, **222**. In contrast, if the changes in SHI levels are smaller in response to changes in the volume flow rates of air supplied by those one or more CRAC units **220**, **222**, the level of influence by those one or more CRAC units **220**, **222** may be considered as being smaller. Through knowledge of the varying levels of influence over one or more areas by the one or more CRAC units **220**, **222**, individual operations of the CRAC units **220**, **222** may substantially be tailored to, for instance, maximize efficiency and energy utilization in response to changing conditions in the data center **100**.

In another regard, the operational mode **500** may be implemented to detect problems in the cooling infrastructure of the data center **100**. By way of example, if it is known that one or more CRAC units **220**, **222** should influence a particular area of the data center **100**, but that variations in the volume flow rates of air supplied by the one or more CRAC units **220**, **222** do not result in variations in SHI levels in that particular area, it may be assumed that a problem exists with either the CRAC units **220**, **222** or the configuration of the vent tiles **116**. Based upon this information, the CRAC units **220**, **222** or the vent tiles **116** may be more closely examined to determine whether they are malfunctioning.

As with the operational mode **300** in FIG. **3**, a computational fluid dynamics (CFD) tool programmed to model airflow patterns for various data center configurations may be employed to perform the operational mode **500**. By way of example, some or all of the inputs, for instance, heat loads in the racks, volume flow rates of air supplied by one or more CRAC units, the layout of the data center, etc., may be manually inputted into the CFD tool. More particularly, the CFD tool may be programmed to calculate the SHI values for various areas in the variously configured data centers based upon different CRAC flow settings and to calculate SHI values based upon the different CRAC flow settings.

The CFD tool may also be programmed to determine if the SHI levels for particular areas vary in response to the different CRAC flow settings and to therefore determine whether one or more of the CRAC units influence the particular areas of the data center. In addition, the CFD tool may be further programmed to determine the level of influence one or more CRAC units have over the particular areas based upon the levels of SHI level changes described hereinabove. Consequently, a CFD tool employing the operational mode **500** may be used as a tool for evaluating the influence of one or more CRAC units over various areas

in a data center. The influences of the one or more CRAC units may be used, for instance, to substantially optimize provisioning of cooling to the various areas of the data center. In one respect, the influences of the one or more CRAC units may be used as a means for selecting appropriately configured CRAC units capable of supplying sufficient cooling resources to the areas they are positioned to influence.

Turning now to FIG. **6**, there is shown a flow diagram of an operational mode **600** for evaluating airflow through a rack based upon SHI determinations at various locations of a data center **100**. It is to be understood that the following description of the operational mode **600** is one manner of a variety of different manners in which the airflow in the data center **100** may substantially be optimized. It should also be apparent to those of ordinary skill in the art that the operational mode **600** represents a generalized illustration and that other steps may be added or existing steps may be removed, modified or rearranged without departing from a scope of the invention.

The description of the operational mode **600** is made with reference to the block diagram **200** illustrated in FIG. **2**, and thus makes reference to the elements cited therein. It should, however, be understood that the operational mode **500** is not limited to the elements set forth in the block diagram **200**. Instead, it should be understood that the operational mode **500** may be practiced by control systems having different configurations than the configuration set forth in the block diagram **200**.

The operational mode **600** may be initiated or started at step **602**, for instance, by activating one or more CRAC units **220**, **222**, activating one or more components in the data center **100**, etc. In addition, or alternatively, the operational mode **600** may be manually initiated, after a predetermined period of time, etc.

Steps **304**–**308** are the same as those steps described hereinabove with respect to FIG. **3**. In addition, step **504** is the same as step **504** described hereinabove with respect to FIG. **5**. Therefore, a detailed description of these steps is not reproduced. Instead, the description of steps **304**–**308** and step **504** set forth hereinabove is relied upon as providing sufficient disclosure of these steps.

At step **604**, it is determined whether flow field settings affecting one or more areas of the data center **100** is to be varied. The flow field settings may include one or more of the volume flow rates of one or more CRAC units **220**, **222**, the layouts of one or more vent tiles **116**, the positions of adjustable panels or adjustable louvers configured to vary airflow into individual racks, the speeds of rack-mounted fans, etc. In addition, the one or more vent tiles may be positioned on a raised floor, a lowered ceiling, a delivery point of a ducted supply network, a return point of a ducted return network, etc. The flow field setting may be varied during a first iteration of the operational mode **600**. However, one or more of the flow field settings may not necessarily be changed during further iterations of the operational mode **600**. For instance, a "no" condition at step **604** may be reached after a predetermined number of iterations, or more particularly, when a predetermined number of SHI calculations have been obtained. The predetermined number of iterations may be based upon, for instance, the level of accuracy desired in determining airflow characteristics through one or more racks **206**, **208**. Thus, for instance, a greater number of iterations may be performed to obtain greater accuracy.

If it is the first iteration of the operational mode **600** or if it is determined that one or more of the flow field settings are to be varied, one or more of the flow field settings may be changed at step **606**. The determination of which of the flow field settings to manipulate may be based upon, for instance, historically known effects of the changes, an iterative process in which various changes in one or more of the flow field settings are performed to determine various outcomes, etc. In addition, the one or more of the flow field settings may be changed to perturb existing airflow patterns in relatively small amounts. In other words, the perturbation caused by the changes in one or more of the flow field settings may be performed, not to create a different flow pattern but to alter the extent and magnitude of existing flow patterns.

If, at step **604**, it is determined that one or more of the flow field settings are not to be varied, the controller **204** may compare the stored SHI values of the areas or one or more racks **206**, **208** at the various flow field settings, as indicated at step **608**. The determination to not vary one or more of the flow field settings may be reached when, for instance, sufficient SHI values have been calculated to achieve a predetermined level of accuracy in determining the airflow characteristics through one or more of the racks **206**, **208**.

At step **610**, the respective SHI levels for one or more racks at various flow field settings are compared to determine whether the SHI levels have changed at the different flow field settings. If the SHI levels have not changed for a particular rack, one or more of the flow field settings may be varied as indicated at step **606** and the SHI may be recalculated. For a particular rack, if the SHI levels have changed for different flow field settings, the controller **204** may determine the level to which the SHI has changed at step **612**. In addition, the controller **204** may correlate the change in SHI levels to the rack airflow at step **614**. By way of example, the controller **204** may access a database that is stored, for instance, in the memory **218**, that correlates various SHI level changes to rack airflows. The database may be configured, for instance, in the form of a look-up table.

At step **616**, based upon the correlation at step **614**, the controller **204** may output an evaluation of the airflows of one or more racks. In one regard, through knowledge of the airflows through the one or more racks, the racks may be reconfigured to generally enable better airflow through the one or more racks, which may yield greater optimization in the provisioning of cooling to those one or more racks.

As with the operational mode **300** in FIG. **3** and the operational mode **500** in FIG. **4**, a computational fluid dynamics (CFD) tool programmed to model airflow patterns for various data center configurations may be employed to perform the operational mode **600**. By way of example, some or all of the inputs, for instance, heat loads in the racks, volume flow rates of air supplied by one or more CRAC units, the layout of the data center, etc., may be manually inputted into the CFD tool. More particularly, the CFD tool may be programmed to calculate the SHI values for one or more racks based upon different CRAC flow settings and to calculate SHI values of the one or more racks based upon the different CRAC flow settings.

The CFD tool may also be programmed to determine variations in the SHI levels for the one or more racks in response to the different CRAC flow settings. The CFD tool may also be configured to evaluate the airflows through the one or more racks based upon the variations in the SHI levels. Consequently, a CFD tool employing the operational mode **600** may be used as a tool for evaluating the airflow characteristics through one or more racks. The airflow characteristics may be used, for instance, to substantially

optimize provisioning of cooling to the one or more racks. In one respect, the influences of the one or more CRAC units may be used as a means for configuring the one or more racks such that airflow through the one or more racks is substantially optimized.

The operations set forth in the operational modes **300**, **500**, and **600** may be contained as utilities, programs, or subprograms, in any desired computer accessible medium. In addition, the operational modes **300**, **500**, and **600** may be embodied by computer programs, which can exist in a variety of forms both active and inactive. For example, it can exist as software program(s) comprised of program instructions in source code, object code, executable code or other formats. Any of the above can be embodied on a computer readable medium, which include storage devices and signals, in compressed or uncompressed form.

Exemplary computer readable storage devices include conventional computer system RAM, ROM, EPROM, EEPROM, and magnetic or optical disks or tapes. Exemplary computer readable signals, whether modulated using a carrier or not, are signals that a computer system hosting or running the computer program can be configured to access, including signals downloaded through the Internet or other networks. Concrete examples of the foregoing include distribution of the programs on a CD ROM or via Internet download. In a sense, the Internet itself, as an abstract entity, is a computer readable medium. The same is true of computer networks in general. It is therefore to be understood that any electronic device capable of executing the above-described functions may perform those functions enumerated above.

FIG. **7** illustrates an exemplary computer system **700** capable of performing various operations described hereinabove with respect to FIGS. **3**, **5**, and **6**. The computer system **700** may include, for example, the controller **204** and/or the computing device **126**. In this respect, the computer system **700** may be used as a platform for executing one or more of the functions described hereinabove.

The computer system **700** includes one or more controllers, such as a processor **702**. The processor **702** may be used to execute some or all of the steps described in the operational modes **300**, **500**, and **600**. Commands and data from the processor **702** are communicated over a communication bus **704**. The computer system **700** also includes a main memory **706**, such as a random access memory (RAM), where the program code for, for instance, the controller **204** and/or the controller of the computing device **126**, may be executed during runtime, and a secondary memory **708**. The secondary memory **708** includes, for example, one or more hard disk drives **710** and/or a removable storage drive **712**, representing a floppy diskette drive, a magnetic tape drive, a compact disk drive, etc., where a copy of the program code for the provisioning system may be stored.

The removable storage drive **710** reads from and/or writes to a removable storage unit **714** in a well-known manner. User input and output devices may include a keyboard **716**, a mouse **718**, and a display **720**. A display adaptor **722** may interface with the communication bus **704** and the display **720** and may receive display data from the processor **702** and convert the display data into display commands for the display **720**. In addition, the processor **702** may communicate over a network, e.g., the Internet, LAN, etc., through a network adaptor **724**.

It will be apparent to one of ordinary skill in the art that other known electronic components may be added or substituted in the computer system **700**. In addition, the computer system **700** may include a system board or blade used in a rack in a data center, a conventional "white box" server or computing device, etc. Also, one or more of the components in FIG. **7** may be optional (e.g., user input devices, secondary memory, etc.).

What has been described and illustrated herein is a preferred embodiment of the invention along with some of its variations. The terms, descriptions and figures used herein are set forth by way of illustration only and are not meant as limitations. Those skilled in the art will recognize that many variations are possible within the spirit and scope of the invention, which is intended to be defined by the following claims—and their equivalents—in which all terms are meant in their broadest reasonable sense unless otherwise indicated.

What is claimed is:

1. A method for evaluating one or more components in a data center, the method comprising:

detecting inlet and outlet temperatures of one or more heat dissipating devices;

detecting temperatures of air supplied by one or more computer room air conditioning (CRAC) units;

calculating indices of air re-circulation for the one or more heat dissipating devices based upon the detected inlet temperatures, outlet temperatures and supplied air temperatures;

varying a flow field setting of air delivered to the one or more heat dissipating devices;

determining whether the indices of air re-circulation has changed in response to the varied flow field settings; and

evaluating the one or more components based upon changes in the indices of air re-circulation for the one or more heat dissipating devices at the various flow field settings.

2. The method according to claim **1**, wherein the step of varying a flow field setting comprises varying at least one of a volume flow rate of air supplied by one or more CRAC units, at least one characteristic of air supplied through one or more vent tiles, and at least one characteristic of air returned through one or more return vent tiles.

3. The method according to claim **1**, further comprising:

comparing the indices of air re-circulation with respective inlet temperatures of the one or more heat dissipating devices; and

determining relationships between the indices of air re-circulation and the respective inlet temperatures of the one or more heat dissipating devices at the varied volume flow field settings.

4. The method according to claim **3**, further comprising:

plotting the indices of air re-circulation with respective inlet temperatures of the one or more heat dissipating devices based upon differing levels of flow field settings, wherein the step of determining relationships comprises determining whether the plots indicate that a nearly linear relationship exists between the plotted indices of air re-circulation and respective inlet temperatures of the one or more heat dissipating devices.

5. The method according to claim **4**, further comprising:

indicating that an infrastructure of the data center is substantially optimized in response to the plots indicating that a nearly linear relationship exists; and

indicating that the infrastructure of the data center is not substantially optimized in response to the plots indicating that a nearly linear relationship does not exist.

6. The method according to claim **1**, wherein the indices of air re-circulation are supply heat indices and are defined by the following equation:

$$SHI = \left(\frac{T_{in} - T_{ref}}{T_{out} - T_{ref}}\right)$$

wherein, T_{in} and T_{out} are the inlet and outlet temperatures of one of the one or more heat dissipating devices, and T_{ref} denotes the supply air temperatures of one or more of the CRAC units.

7. The method according to claim **1**, further comprising:

designing a substantially optimized layout of the data center based upon the step of evaluating the one or more components.

8. The method according to claim **1**, further comprising:

determining various flow field settings;

comparing the indices of air re-circulation at the various flow field settings for at least one of the one or more heat dissipating devices; and

determining whether the indices of air re-circulation have changed for the various flow field settings for the at least one of the one or more heat dissipating devices.

9. The method according to claim **8**, wherein the flow field settings comprise volume flow rates of one or more CRAC units, and wherein the step of evaluating the one or more components comprises outputting an indication that the at least one of the one or more heat dissipating devices is not influenced by at least one of the one or more CRAC units in response to the indices of air re-circulation being substantially the same for the various volume flow rates for the at least one of the one or more heat dissipating devices; and

wherein the step of evaluating the one or more components comprises outputting an indication that the at least one of the one or more heat dissipating devices is influenced by at least one of the one or more CRAC units in response to the indices of air re-circulation changing for the various volume flow rates for the at least one of the one or more heat dissipating devices.

10. The method according to claim **9**, further comprising:

determining a level of influence of at least one of the one or more CRAC units in response to a determination that the at least one of the one or more heat dissipating devices is influenced by at least one of the one or more CRAC units.

11. The method according to claim **8**, further comprising:

varying one or more of the flow field settings in response to the indices of air re-circulation being substantially the same for the various one or more flow field settings for the at least one of the one or more heat dissipating devices;

determining the air re-circulation index of the at least one of the one or more heat dissipating devices; and

determining whether the indices of air re-circulation have changed for the various flow field settings for the at least one of the one or more heat dissipating devices.

12. The method according to claim **11**, further comprising:

determining the level of change in the air re-circulation index of at least one of the one or more heat dissipating devices in response to a determination that the air re-circulation index of the at least one of the one or more heat dissipating devices has changed;

correlating the level of change in the air re-circulation index of the at least one of the one or more heat dissipating devices to an airflow characteristic of the at least one of the one or more heat dissipating devices.

13. A computational fluid dynamics (CFD) tool for evaluating one or more components in a data center, said CFD tool comprising:

a modeling program configured to obtain inlet and outlet temperatures of one or more heat dissipating devices and temperatures of air supplied by one or more computer room air conditioning (CRAC) units based upon at least one of input by a user and through a calculation of airflow characteristics in the data center;

wherein the modeling program is further configured to calculate indices of air re-circulation of the one or more heat dissipating devices based upon the inlet and outlet temperatures of one or more heat dissipating devices and temperatures of air supplied by one or more CRAC units, the modeling program being further configured to calculate the indices of air re-circulation of the one or more heat dissipating devices at various flow field settings of air delivered to the one or more heat dissipating devices; and

wherein the modeling program is further configured to evaluate the one or more components based upon changes in the indices of air re-circulation of the one or more heat dissipating devices.

14. The CFD tool according to claim **13**, wherein the modeling program is further configured to compare the indices of air re-circulation with respective inlet temperatures of the one or more heat dissipating devices and to determine relationships between the indices of air re-circulation and the respective inlet temperatures of the one or more heat dissipating devices at the various flow field settings, said modeling program being further configured to plot the indices of air re-circulation with respective inlet temperatures of the one or more heat dissipating devices based upon the various flow field settings.

15. The CFD tool according to claim **14**, wherein the modeling program is further configured to determine whether a near linear relationship exists between the plotted indices of air re-circulation and respective inlet temperatures of the one or more heat dissipating devices at the various flow field setting, and wherein the modeling program is further configured to indicate that an infrastructure of the data center is substantially optimized in response to a determination that a near linear relationship exists and to indicate that the infrastructure of the data center is not substantially optimized in response to a determination that a nearly linear relationship does not exist.

16. The CFD tool according to claim **13**, wherein the modeling program is further configured to design a substantially optimized layout of the data center.

17. The CFD tool according to claim **13**, wherein the modeling program is further configured to determine various flow field settings, to compare the indices of air re-circulation at the various flow field settings for at least one of the one or more heat dissipating devices, and to determine whether the indices of air re-circulation have changed for the various volume flow field settings for the at least one of the one or more heat dissipating devices.

18. The CFD tool according to claim **17**, wherein the various flow field settings comprise various volume flow settings of one or more CRAC units, and wherein the modeling program is further configured to output an indication that the at least one of the one or more heat dissipating devices is not influenced by at least one of the one or more CRAC units in response to the indices of air re-circulation being substantially the same for the various volume flow rates for the at least one of the one or more heat dissipating devices, and to output an indication that the at least one of

the one or more heat dissipating devices is influenced by at least one of the one or more CRAC units in response to the indices of air re-circulation changing for the various volume flow rates for the at least one of the one or more heat dissipating devices.

19. The CFD tool according to claim **18**, wherein the modeling program is further configured to determine a level of influence of at least one of the one or more CRAC units in response to a determination that the at least one of the one or more heat dissipating devices is influenced by at least one of the one or more CRAC units.

20. The CFD tool according to claim **17**, wherein the modeling program is further configured to varying one or more of the flow field settings in response to the indices of air re-circulation being substantially the same for the various flow field settings for the at least one of the one or more heat dissipating devices, to determine the air re-circulation index of the at least one of the one or more heat dissipating devices; and to determine whether the indices of air re-circulation have changed for the various flow field settings for the at least one of the one or more heat dissipating devices.

21. The CFD tool according to claim **20**, wherein the modeling program is further configured to determine the level of change in the air re-circulation index of at least one of the one or more heat dissipating devices in response to a determination that the air re-circulation index of the at least one of the one or more heat dissipating devices has changed and to correlate the level of change in the air re-circulation index of the at least one of the one or more heat dissipating devices to an airflow characteristic of the at least one of the one or more heat dissipating devices.

22. A system for evaluating one or more components in a data center, said system comprising:

one or more heat dissipating devices having respective inlet and outlet temperature sensors;

one or more computer room air conditioning (CRAC) units having respective supply air temperature sensors; and

a controller configured to calculate indices of air re-circulation for the one or more heat dissipating devices based upon temperatures detected by the inlet and outlet temperature sensors and the supply air temperature sensors at various volume flow field settings of air delivered to the one or more heat dissipating devices, wherein the controller is further configured to evaluate the one or more components in the data center based upon changes in the air re-circulation indices.

23. The system according to claim **22**, wherein the controller is further configured to compare the indices of air re-circulation with respective inlet temperatures of the one or more heat dissipating devices and to determine relationships between the indices of air re-circulation and the respective inlet temperatures of the one or more heat dissipating devices at the various flow field settings, said controller being further configured to plot the indices of air re-circulation with respective inlet temperatures of the one or more heat dissipating devices based upon the various flow field settings.

24. The system according to claim **23**, wherein the controller is further configured to determine whether a near linear relationship exists between the plotted indices of air re-circulation and respective inlet temperatures of the one or more heat dissipating devices at the various flow field settings, and wherein the controller is further configured to indicate that an infrastructure of the data center is substantially optimized in response to a determination that a near linear relationship exists and to indicate that the infrastructure of the data center is not substantially optimized in response to a determination that a nearly linear relationship does not exist.

25. The system according to claim **22**, wherein controller is further configured to design a substantially optimized layout of the data center.

26. The system according to claim **22**, wherein the controller is configured to calculate the indices of air re-circulation through the following equation:

$$SHI = \left(\frac{T_{in} - T_{ref}}{T_{out} - T_{ref}}\right)$$

wherein, SHI is defined as a supply heat index, T_{in} and T_{out} are the inlet and outlet temperatures of one of the one or more heat dissipating devices, and T_{ref} denotes the supply air temperatures of one or more of the CRAC units.

27. The system according to claim **22**, wherein the controller is further configured to determine various flow field settings, to compare the indices of air re-circulation at the various flow field settings for at least one of the one or more heat dissipating devices, and to determine whether the indices of air re-circulation have changed for the various flow field settings for the at least one of the one or more heat dissipating devices.

28. The system according to claim **27**, wherein the various flow field settings comprise various volume flow rates of air supplied by one or more CRAC units, and wherein the controller is further configured to output an indication that the at least one of the one or more heat dissipating devices is not influenced by at least one of the one or more CRAC units in response to the indices of air re-circulation being substantially the same for the various volume flow rates for the at least one of the one or more heat dissipating devices, and to output an indication that the at least one of the one or more heat dissipating devices is influenced by at least one of the one or more CRAC units in response to the indices of air re-circulation changing for the various volume flow rates for the at least one of the one or more heat dissipating devices.

29. The system according to claim **28**, wherein the controller is further configured to determine a level of influence of at least one of the one or more CRAC units in response to a determination that the at least one of the one or more heat dissipating devices is influenced by at least one of the one or more CRAC units.

30. The system according to claim **27**, wherein the controller is further configured to varying one or more of the flow field settings in response to the indices of air re-circulation being substantially the same for the various flow field settings for the at least one of the one or more heat dissipating devices, to determine the air re-circulation index of the at least one of the one or more heat dissipating devices; and to determine whether the indices of air re-circulation have changed for the various flow field settings for the at least one of the one or more heat dissipating devices.

31. The system according to claim **30**, wherein the controller is further configured to determine the level of change in the air re-circulation index of at least one of the one or more heat dissipating devices in response to a determination that the air re-circulation index of the at least one of the one or more heat dissipating devices has changed and to correlate the level of change in the air re-circulation index of the

at least one of the one or more heat dissipating devices to an airflow characteristic of the at least one of the one or more heat dissipating devices.

32. A system for evaluating one or more components in a data center, said system comprising:

means for detecting inlet and outlet temperatures of one or more heat dissipating devices;

means for detecting temperatures of air supplied by one or more computer room air conditioning (CRAC) units;

means for calculating indices of air re-circulation for the one or more heat dissipating devices at various flow field settings of air delivered to the one or more heat dissipating devices; and

means for evaluating the one or more components based upon the calculated indices of air re-circulation at the various flow field settings.

33. The system according to claim **32**, wherein the means for calculating comprises means for comparing the indices of air re-circulation with respective inlet temperatures of the one or more heat dissipating devices and means for determining relationships between the indices of air re-circulation and the respective inlet temperatures of the one or more heat dissipating devices at the varied flow field settings.

34. The system according to claim **32**, further comprising:

means for designing a substantially optimized layout of the data center based upon the step of evaluating the one or more components.

35. The system according to claim **32**, further comprising:

means for determining volume flow rates of air supplied by the one or more CRAC units;

means for comparing the indices of air re-circulation at the various volume flow rates of air supplied by the one or more CRAC units for at least one of the one or more heat dissipating devices;

means for determining whether the indices of air re-circulation have changed for the various volume flow rates for the at least one of the one or more heat dissipating devices; and

means for outputting at least one of an indication and a level of influence of at least one of the one or more CRAC units over at least one of the one or more racks.

36. The system according to claim **32**, further comprising:

means for varying one or more of the flow field settings in response to the indices of air re-circulation being substantially the same for the various flow field settings for the at least one of the one or more heat dissipating devices;

means for determining the air re-circulation index of the at least one of the one or more heat dissipating devices;

means for determining whether the indices of air re-circulation have changed for the various flow field settings for the at least one of the one or more heat dissipating devices;

means for determining the level of change in the air re-circulation index of at least one of the one or more heat dissipating devices in response to a determination that the air re-circulation index of the at least one of the one or more heat dissipating devices has changed; and

means for correlating the level of change in the air re-circulation index of the at least one of the one or more heat dissipating devices to an airflow characteristic of the at least one of the one or more heat dissipating devices.

37. A computer readable storage medium on which is embedded one or more computer programs, said one or more computer programs implementing a method for evaluating one or more components in a data center, said one or more computer programs comprising a set of instructions for:

detecting inlet and outlet temperatures of one or more heat dissipating devices;

detecting temperatures of air supplied by one or more computer room air conditioning (CRAC) units;

calculating indices of air re-circulation for the one or more racks at various flow field settings of air delivered to the one or more heat dissipating devices; and

evaluating the one or more components based upon the calculated indices of air re-circulation at the various flow field settings.

38. The computer readable storage medium according to claim **37**, said one or more computer programs further comprising a set of instructions for:

comparing the indices of air re-circulation with respective inlet temperatures of the one or more heat dissipating devices; and

determining relationships between the indices of air re-circulation and the respective inlet temperatures of the one or more heat dissipating devices at the varied flow field settings.

39. The computer readable storage medium according to claim **37**, said one or more computer programs further comprising a set of instructions for:

designing a substantially optimized layout of the data center based upon the step of evaluating the one or more components.

40. The computer readable storage medium according to claim **37**, said one or more computer programs further comprising a set of instructions for:

determining volume flow rates of air supplied by the one or more CRAC units;

comparing the indices of air re-circulation at the various volume flow rates of air supplied by the one or more CRAC units for at least one of the one or more heat dissipating devices;

determining whether the indices of air re-circulation have changed for the various volume flow rates for the at least one of the one or more heat dissipating devices; and

outputting at least one of an indication and a level of influence of at least one of the one or more CRAC units over at least one of the one or more heat dissipating devices.

41. The computer readable storage medium according to claim **37**, said one or more computer programs further comprising a set of instructions for:

varying one or more of the flow field settings in response to the indices of air re-circulation being substantially the same for the various flow field settings for the at least one of the one or more heat dissipating devices;

determining the air re-circulation index of the at least one of the one or more heat dissipating devices;

determining whether the indices of air re-circulation have changed for the various flow field settings for the at least one of the one or more heat dissipating devices;

determining the level of change in the air re-circulation index of at least one of the one or more heat dissipating devices in response to a determination that the air re-circulation index of the at least one of the one or more heat dissipating devices has changed; and

correlating the level of change in the air re-circulation index of the at least one of the one or more heat dissipating devices to an airflow characteristic of the at least one of the one or more heat dissipating devices.

* * * * *

Exhibit 8

U.S. Patent No. 6,718,277 – Infringement Claim Chart

Claim 1	Exemplary Evidence of Infringement by DataBank
[1pre] A method of controlling atmospheric conditions within a building, said method comprising the steps of:	DataBank's data centers use a method of controlling atmospheric conditions within a building. DataBank uses Vertiv and Liebert cooling in its U.S. data centers to control atmospheric conditions. Liebert's cooling units are controlled, for example, by Liebert's iCOM and/or iCOM-S Intelligent Communication and Monitoring System, which uses a method for evaluating one or more components in a data center. 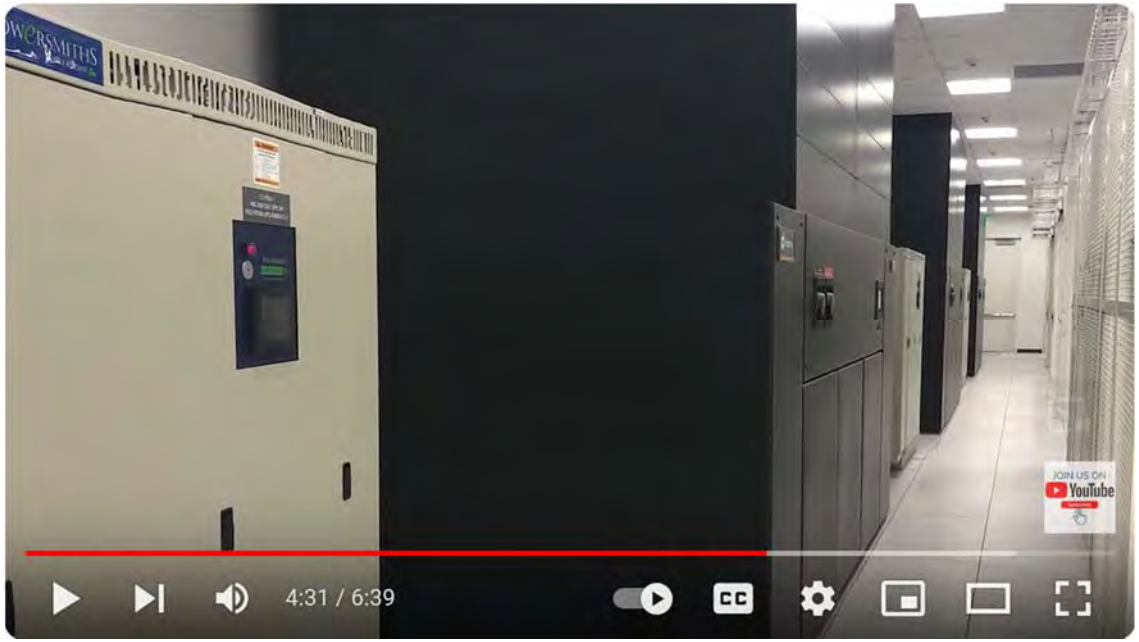 https://www.youtube.com/watch?v=YJbtLEFI6t0, at 4:31.

Claim 1	Exemplary Evidence of Infringement by DataBank
	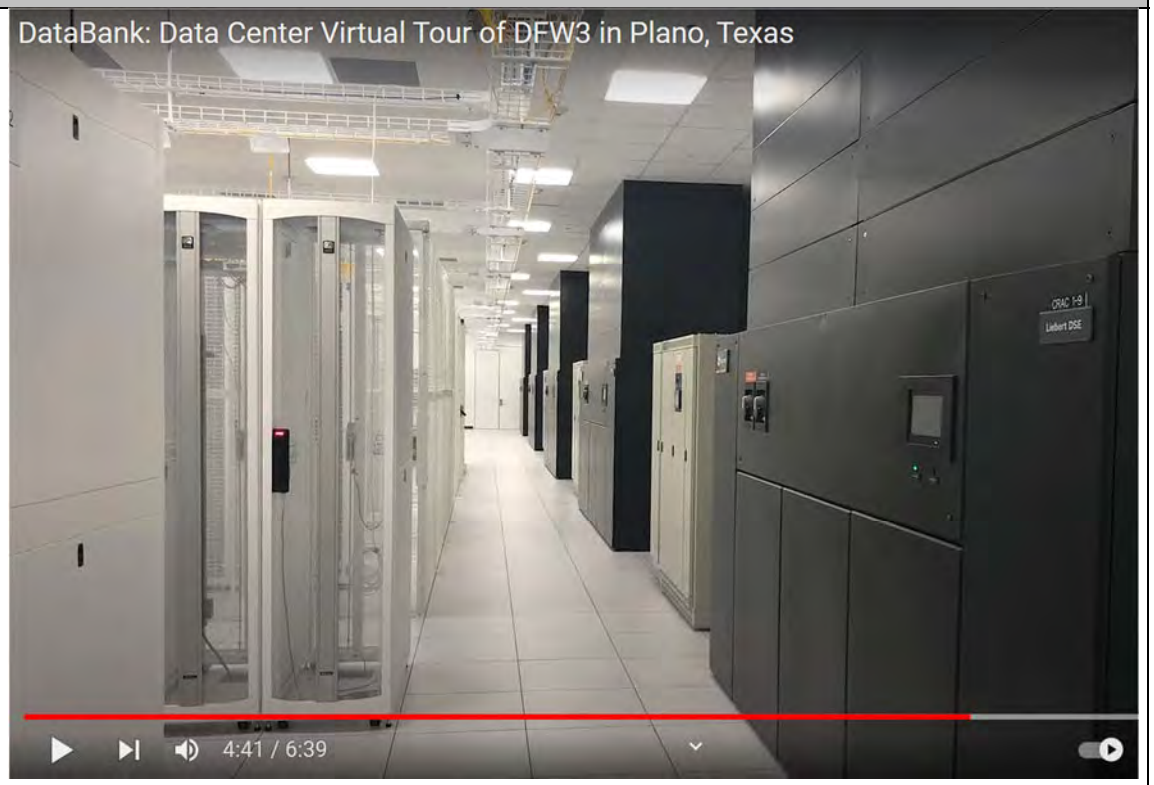 https://www.youtube.com/watch?v=YJbtLEFI6t0, at 4:41. DataBank also acquired Zayo's data centers in 2020. https://www.databank.com/resources/press-releases/databank-closes-acquisition-of-zcolo-us-and-uk-data-center-assets/ Zayo also uses Vertiv and Liebert CRAC units in their data centers, which are controlled by Liebert's iCOM system.

Claim 1	Exemplary Evidence of Infringement by DataBank
	Zayo – Mt. Prospect Data Center Zayo's Chicago data center is located at 800 E Business Center Dr., Mount Prospect, IL 60056. The facility is standalone building located in 5.4 acres of land having data center space, conference rooms, enclosed & secured loading docks and drive-in door, and 166 parking spaces. The data center is ideally situated, close to O'Hare international airport, and is approximately 25 miles from downtown Chicago. The facility is located outside the flood plain, and outside all flight paths of Chicago airport. https://cloudandcolocation.com/datacenters/zayo-mt-prospect-data-center/ Mt. Prospect data center is a 2N redundant power infrastructure facility. The data center has 16,000 kW of utility power, and provides 200 watts per square feet of usable UPS power density. The immediate power failure is protected by 10,000 kW UPS in 2N configuration, and automatic transfer of load to 16,000 kw diesel generators in N+1 redundancy. The diesel generators have fuel storage for 48 hours runtime at full load with fuel supply refuel. Zayo has standby emergency refueling contracts with local fuel providers, and test generators weekly with non-load exercise to make them up and running. The multiple 30 tons Liebert CRAC units effectively moderate the cooling and humidity in the data center in N+1 configuration. The data center has alarms installed that are attached to building management system (BMS), local police, and fire department. https://cloudandcolocation.com/datacenters/zayo-mt-prospect-data-center/

Claim 1	Exemplary Evidence of Infringement by DataBank
	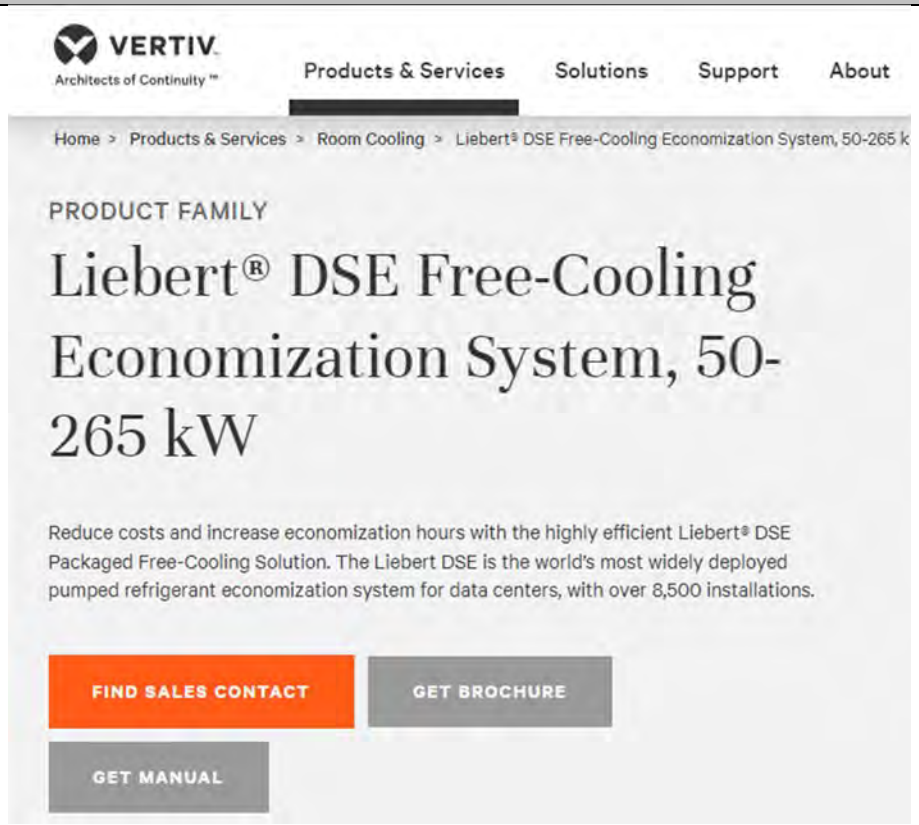 https://www.vertiv.com/en-in/products-catalog/thermal-management/room-cooling/liebert-dse-free-cooling-system-50-165kw/

Claim 1	Exemplary Evidence of Infringement by DataBank
	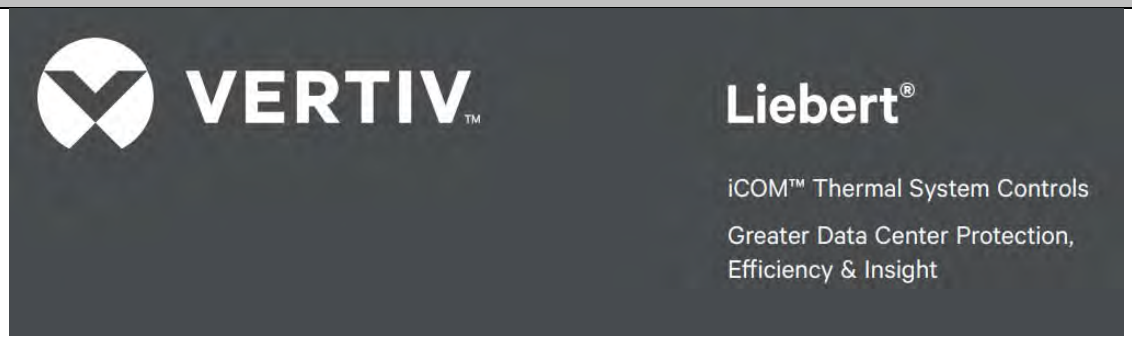 https://www.vertiv.com/49d637/globalassets/shared/liebert-icom-thermal-system-controls-brochure.pdf ("iCOM Brochure").

Claim 1	Exemplary Evidence of Infringement by DataBank
	At the cooling unit level, the Liebert iCOM unit control provides the highest protection available and optimal performance. • Monitors 380 unit and component points to eliminate single points of failure • Self-healing features avoid passing unsafe operating thresholds • Highly intuitive, full-color, touch screen simplifies operations to save time and reduce human error • Multiple, automated unit protection routines, including lead/lag, cascade, rapid restart, refrigerant protection and valve calibration **At the supervisory level,** the Liebert iCOM-S system control offers a revolutionary way to harmonize and optimize thermal system performance to optimize capacity across the data center, gain quick access to actionable data, and automate system diagnostics and trending. • Advanced monitoring and at-a-glance reporting on performance metrics and trends for efficiency, capacity and adverse events • Up to 50% system efficiency gains • 30% lower deployment costs • Teamwork modes that prevent conflict between units and allow them to adapt to changes in facility and IT demand to improve efficiency and availability and reduce system wear and tear – saving more than $10,000 per unit per year in energy costs • Simple and easy to deploy — auto-configuration to detect and configure up to 4,800 sensors, eliminating the need for custom integration to building management systems and cutting sensor deployment times in half Liebert iCOM unit control and Liebert iCOM-S system control are available for new Vertiv™ data center cooling units or as retrofits. iCOM Brochure at p. 3. DataBank also uses Automated Logic's WebCtrl Building Automation System to measure, monitor, and manage atmospheric conditions in its data centers.

Claim 1	Exemplary Evidence of Infringement by DataBank
	The DataBank data centers offer facilities and infrastructure to provide colocation services for its customers. Each facility is designed with multiple data halls within where customer equipment resides. Single racks, cabinets, and / or isolated cages are offered to customers within the several thousand square feet of data hall space at each facilities. The following describes the in-scope components supporting the Data Center Services system: **System / Application** — **Description** — **Infrastructure** Nagios — Network monitoring — GNU / Linux (Nagios Core) WebCTRL 5.5 — Environmental monitoring (Dallas and Richardson) — Automated Logic TrendPoint — Environmental monitoring (Edina only) — Automated Logic https://www.westmont.illinois.gov/AgendaCenter/ViewFile/Item/4176?fileID=3983, p11; The WebCTRL® system **Every smart building needs a cornerstone.** A proven, industry-leading system from the original name in building analytics, WebCTRL® gives you the ability to fully understand your operations and analyze the results with tools that make sense to you. **The Power of Simplicity provides analytical tools that help you achieve all areas of building optimization.** • Maintain comfort and productivity • Deliver operating efficiencies • Balance occupant needs and operating costs • Anticipate system issues • Maintain sustainability • Document your successful results Look at your building automation system as the gathering place, the repository of all operating data and information related to your building. Whether it is temperature history, utility metering, trend data, or comfort measurement, your WebCTRL system effectively packages the information you need for management of your facilities.

Claim 1	Exemplary Evidence of Infringement by DataBank
	https://www.automatedlogic.com/en/media/WebCTRL_Building_Analytics_Brochure_April_2015_tcm702-100204.pdf, p. 2. 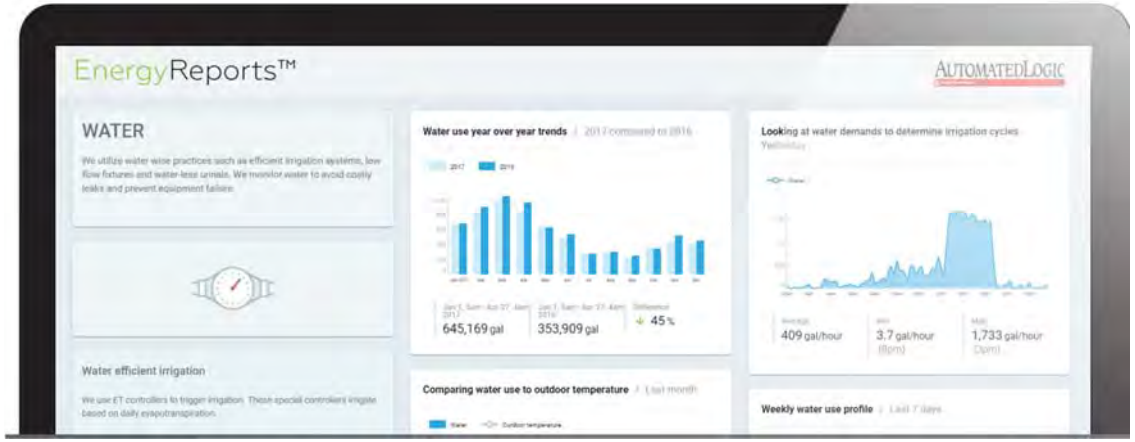 https://www.automatedlogic.com/en/media/WebCTRL_Building_Analytics_Brochure_April_2015_tcm702-100204.pdf, p. 7. Versatile and easy to use, EnergyReports generates data on the fly or automatically sends it in the format you specify. Leveraging WebCTRL's extensive and scalable trending capabilities*, it provides a fully integrated solution, easily installed and deployed. And unlike any other management tool, EnergyReports can display the Environmental Index alongside energy usage data for a graphic comparison of efficiency and comfort. Accessed through a standard browser, EnergyReports offers a variety of colorful graphical formats as well as spreadsheet-style data. Reports include occupied/ unoccupied usage, Cooling Degree Days (CDD), Heating https://ecsi-alc.com/products/profile/energyreports
[1a] supplying a conditioned fluid inside said building;	DataBank supplies a conditioned fluid inside said building. For example, DataBank uses cooling units inside its data centers to supply conditioned fluid. DataBank uses Liebert to control atmospheric conditions in the data center with its cooling units.

Claim 1	Exemplary Evidence of Infringement by DataBank
	DataBank supplies refrigerant (conditioned fluid) through the coil of its Liebert cooling units. The Liebert cooling unit receives the "return air" from the room and delivers cool conditioned "supply air" to the room (supplying conditioned fluid), by transferring heat from the air to the cooling fluid within the coil. 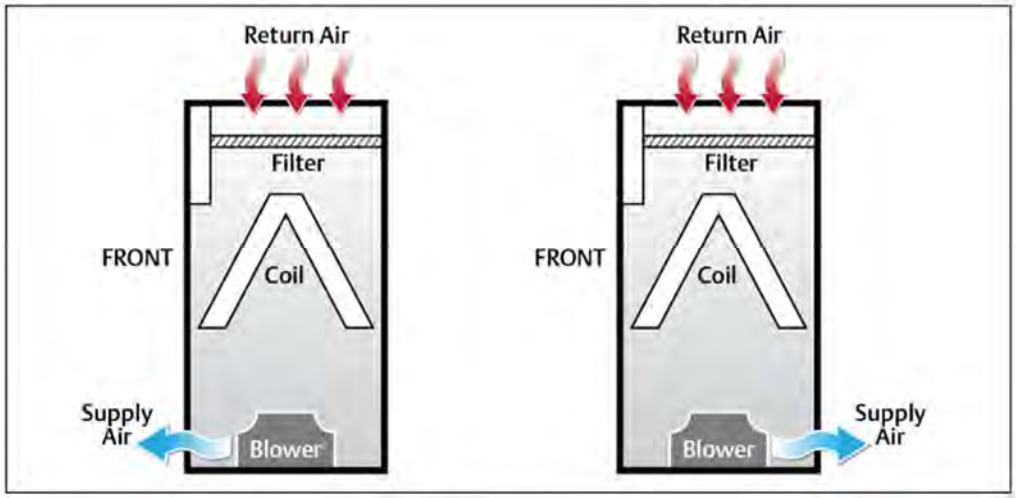 https://www.vertiv.com/4afe7d/globalassets/products/thermal-management/room-cooling/liebert-dse-80-165kw-23-43-tons-downflow-system-design-manual.pdf, at p. 6. Regardless of which type of cooling units or which method of controlling atmospheric conditions are used (Liebert, Automated Logic, or others), DataBank supplies a conditioned fluid inside each of its data centers.
[1b] sensing at least one atmospheric parameter in a plurality of locations inside said building;	DataBank senses at least one atmospheric parameter in a plurality of locations inside said building. For example, DataBank uses Liebert iCOM. Liebert iCOM senses temperatures and humidity at locations throughout the data center.

Claim 1	Exemplary Evidence of Infringement by DataBank
	User Temperature Setpoint Options **2nd Temperature Setpoint** Alternate setpoint activated by customer input (remote alarm device). When customer input connection is 2nd Setpoint, this value becomes the active temperature setpoint. **BMS Backup Temp Setpoint** Selects a temperature setpoint that activates in the event of a BMS timeout. The BMS timer must be configured for this setpoint to activate. See Setting BMS Backup Setpoints on page 117 . **Optimized Aisle Enabled** Read-only. Indicates that iCOM™ is configured for optimized-aisle operation. See Teamwork Mode 3—Optimized Aisle Operation on page 102 . **Temperature Control Sensor** Selects sensor that controls cooling. Values are: • Supply Sensor: Temperature control is based on maintaining the temperature of the discharge air from the cooling unit. See Supply Sensors on page 158 . • Remote Sensor: Temperature control is based on the temperature reading(s) from wired remote sensor(s). See Wired Remote Sensors on page 156 . • Return Sensor: Temperature control is based on maintaining the temperature of the air returning to the cooling unit.

Claim 1	Exemplary Evidence of Infringement by DataBank
	User Humidity Setpoint Options **Dew Point Setpoint** Desired dew point (based on actual return air temperature and humidity) by adding moisture to or removing moisture from the air. **Humidity Control Sensor** Selects sensor used when calculating relative humidity. **Humidity Control Type** Control when staging humidification operations. Valid values: • Relative: Percent of humidification/dehumidification is determined by the difference between the humidity-sensor reading and the humidity setpoint. • Compensated: Percent of humidification/dehumidification is determined by considering the actual deviation from the temperature setpoint and adjusts the humidity setpoint accordingly. The recalculated humidity setpoint displays on the screen. • Predictive: Percent of humidification/dehumidification is determined by considering the actual deviation from the temperature setpoint and adjusts the humidity sensor reading accordingly. The adjusted humidity sensor reading displays on the screen. • Dew point: Percent of humidification/dehumidification is determined by the difference between the dew point calculated from the humidity sensor reading and the dew point setpoint. https://www.vertiv.com/49b8b2/globalassets/shared/liebert-icom-user-manual_sl-31075.pdf ("iCOM Manual") at pp. 15-16. DataBank also uses Automated Logic which senses temperatures in a plurality of locations in the data center.

Claim 1	Exemplary Evidence of Infringement by DataBank
	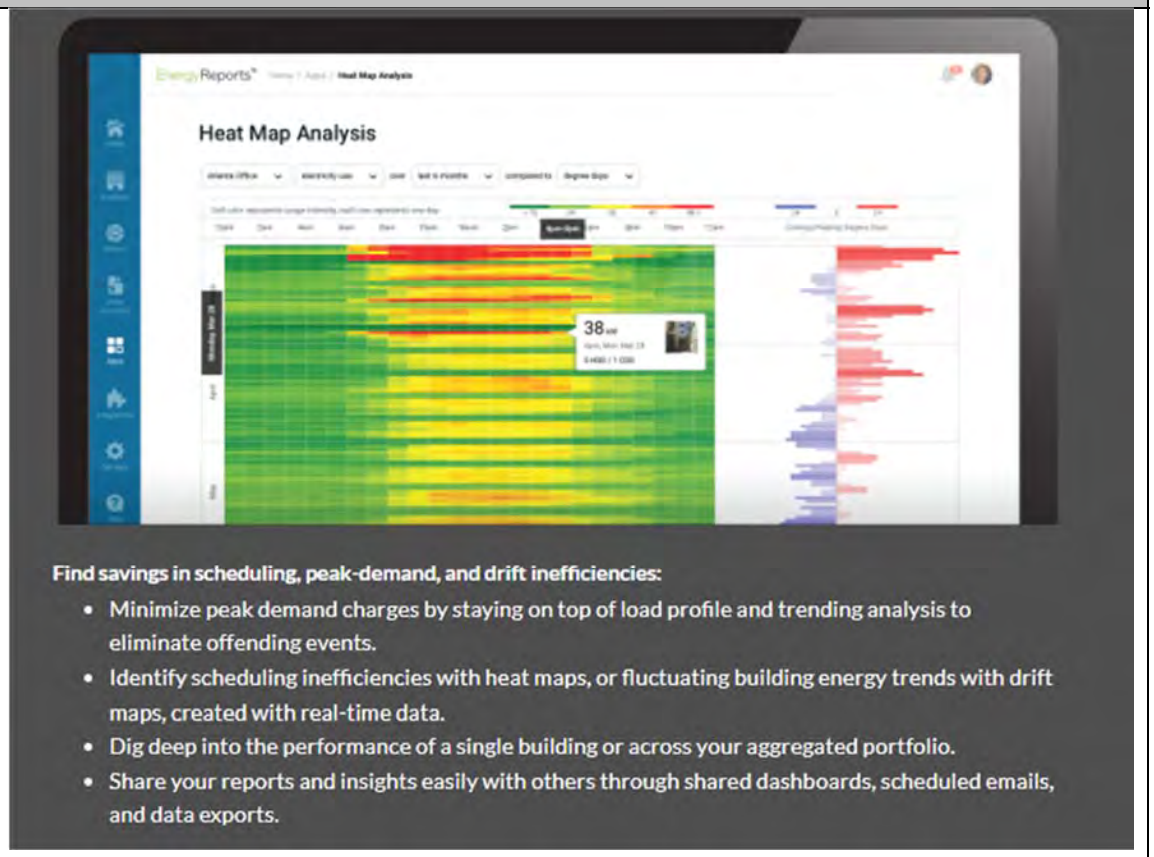 https://ecsi-alc.com/products/profile/energyreports
[1c] generating an empirical atmospheric map from the results of said sensing step using software for processing input from said sensing step and for producing	DataBank an empirical atmospheric map from the results of said sensing step using software for processing input from said sensing step and for producing output in the form of said empirical atmospheric map. For example, DataBank uses Liebert iCOM. Liebert iCOM generates an empirical atmospheric map from the results of sensing temperature at individual racks. Liebert

Claim 1	Exemplary Evidence of Infringement by DataBank
output in the form of said empirical atmospheric map;	iCOM uses software for processing temperature inputs from the sensing step and produces output in the form of a data center temperature map. 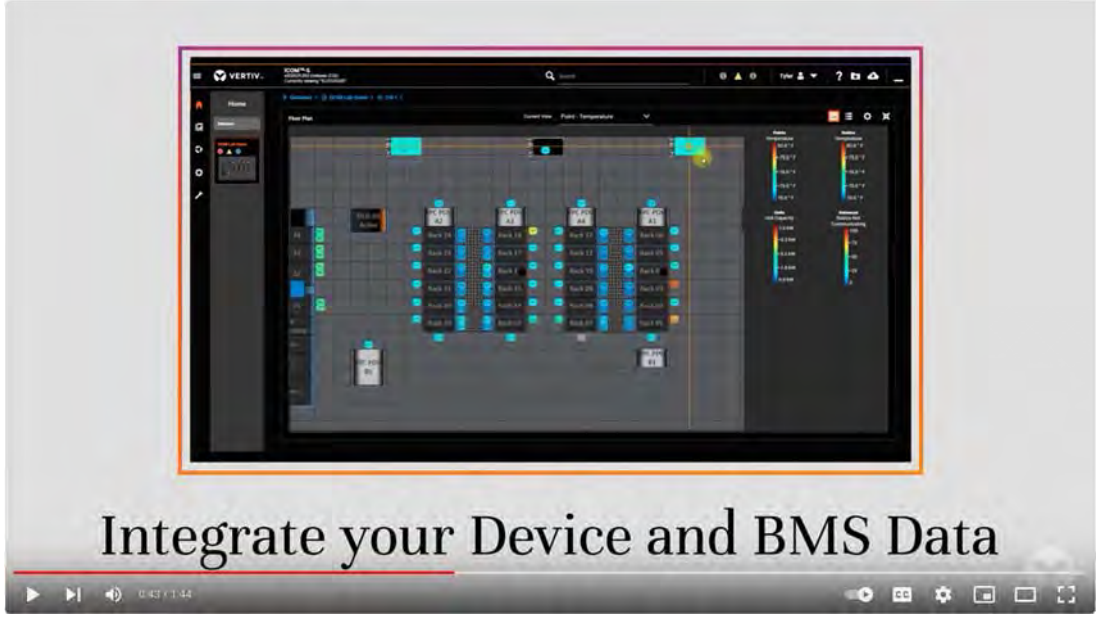 https://www.youtube.com/watch?v=pJutGw7rrF0, at 0:43.

Claim 1	Exemplary Evidence of Infringement by DataBank
	5.1 Preparing for U2U Group Set Up Cooling units in the network will be assigned to groups, which affects how units function in teamwork, standby, rotation, and cascading operations. Especially in large rooms, it is important to consider several factors before setting up groups to balance cooling unit operation with room conditions. **NOTE: For ease of set-up and use, we recommend using only one group unless you have multiple rooms, differing software versions, or different types of cooling units.** 1. Make a map of the room and indicate the location of all heat-generating devices and cooling units to plan for proper heat load management and cooling-air distribution. 2. Note the type of units by product/model, size, etc. 3. Determine the number of units to network together to ensure proper air flow and environmental control, up to 32 units. 4. Determine number of standby units. iCOM Manual at p. 94. DataBank also uses Automated Logic to generate an empirical atmospheric map from the results of the sensed temperatures using software for processing input from the temperature readings and for producing output in the form of an empirical atmospheric map.

Claim 1	Exemplary Evidence of Infringement by DataBank
	The WebCTRL® system **Every smart building needs a cornerstone.** A proven, industry-leading system from the original name in building analytics, WebCTRL® gives you the ability to fully understand your operations and analyze the results with tools that make sense to you. **The Power of Simplicity provides analytical tools that help you achieve all areas of building optimization.** • Maintain comfort and productivity • Deliver operating efficiencies • Balance occupant needs and operating costs • Anticipate system issues • Maintain sustainability • Document your successful results Look at your building automation system as the gathering place, the repository of all operating data and information related to your building. Whether it is temperature history, utility metering, trend data, or comfort measurement, your WebCTRL system effectively packages the information you need for management of your facilities. https://www.automatedlogic.com/en/media/WebCTRL_Building_Analytics_Brochure_April_2015_tcm702-100204.pdf, p. 2.

Claim 1	Exemplary Evidence of Infringement by DataBank
	 Dynamic color floor plans provide an immediate understanding of conditions in your building in a single glance. https://www.automatedlogic.com/en/media/WebCTRL_Building_Analytics_Brochure_April_2015_tcm702-100204.pdf, p. 5.

Claim 1	Exemplary Evidence of Infringement by DataBank
	Thermographic Floor Plan Displays **See your building in living color.** Few operators have the time to sit in front of the computer comparing actual space temperatures with their set points – and with Automated Logic, they don't have to. A timeless and unmatched assessment tool, thermographic floor plan displays allow instantaneous recognition of building and zone conditions. A quick analysis of colors allows the operator to determine if there is an issue. By displaying information using colors rather than numerical data, we eliminate the need for human calculation and interpretation of set point and actual temperature difference, and help resolve whether there is a normal circumstance or an anomaly to be investigated. https://www.automatedlogic.com/en/media/WebCTRL_Building_Analytics_Brochure_April_2015_tcm702-100204.pdf, p. 5.
[1d] comparing said empirical atmospheric map to a template atmospheric map; and	DataBank compares said empirical atmospheric map to a template atmospheric map. For example, DataBank uses Liebert iCOM. Liebert iCOM compares an empirical atmospheric map to a template atmospheric map, for instance by comparing current temperatures to template setpoints.

Claim 1	Exemplary Evidence of Infringement by DataBank
	2.4 Viewing Sensor Data The Sensor Data panel lists the standard and optional sensors monitored by iCOM™and the current reading of each sensor. • Touch , then > *Sensor Data*. The SENSOR DATA panel opens. A secondary panel displays the DAILY SENSOR READING SUMMARY, which shows temperature, humidity and dew-point readings for the cooling unit. iCOM Manual at p. 20. 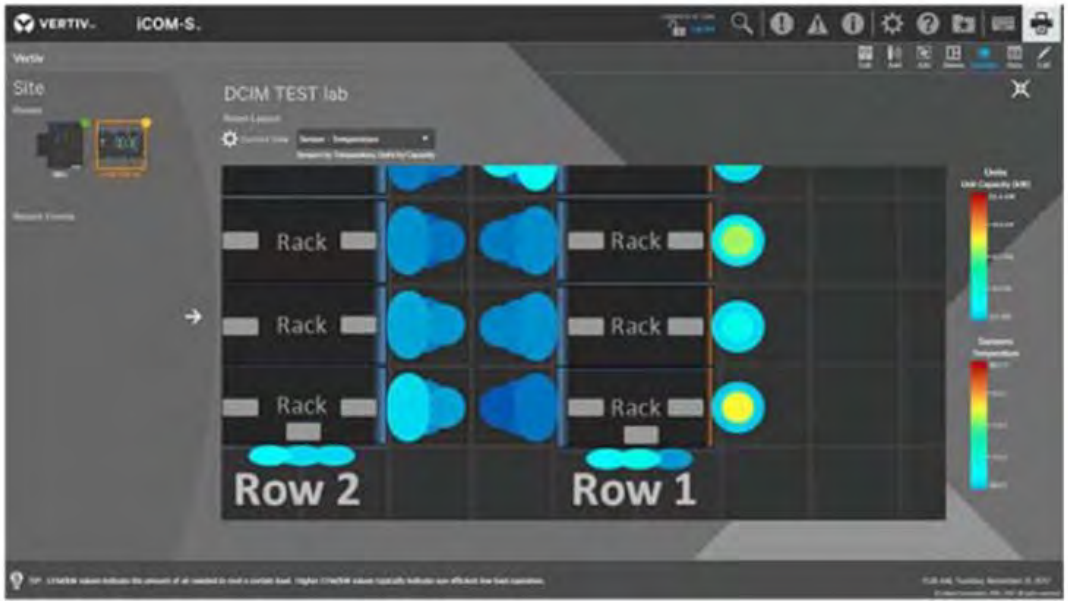 https://www.dksh.com/global-en/products/iot/vertiv-thermal-control-and-monitoring DataBank also uses Automated Logic to compare the atmospheric empirical map to a template empirical map.

Claim 1	Exemplary Evidence of Infringement by DataBank
	https://www.automatedlogic.com/en/media/WebCTRL_Building_Analytics_Brochure_April_2015_tcm702-100204.pdf, p. 2. Dynamic color floor plans provide an immediate understanding of conditions in your building in a single glance. https://www.automatedlogic.com/en/media/WebCTRL_Building_Analytics_Brochure_April_2015_tcm702-100204.pdf, p. 5.

Claim 1	Exemplary Evidence of Infringement by DataBank
	Thermographic Floor Plan Displays **See your building in living color.** Few operators have the time to sit in front of the computer comparing actual space temperatures with their set points – and with Automated Logic, they don't have to. A timeless and unmatched assessment tool, thermographic floor plan displays allow instantaneous recognition of building and zone conditions. A quick analysis of colors allows the operator to determine if there is an issue. By displaying information using colors rather than numerical data, we eliminate the need for human calculation and interpretation of set point and actual temperature difference, and help resolve whether there is a normal circumstance or an anomaly to be investigated. https://www.automatedlogic.com/en/media/WebCTRL_Building_Analytics_Brochure_April_2015_tcm702-100204.pdf, p. 5.
[1e] identifying pattern differentials between said empirical and template atmospheric maps.	DataBank identifies pattern differentials between said empirical and template atmospheric maps. DataBank uses Liebert iCOM. Liebert iCOM identifies pattern differentials between the empirical and template maps, for example, by identifying when sensors are reporting conditions that exceed template conditions.

Claim 1	Exemplary Evidence of Infringement by DataBank
	4.2 Enabling Events and Editing Event Settings In the ALARMS & EVENTS panel, events are grouped into categories for easier management, for example, the factory set remote sensor alarms and humidification/dehumidification events. In some cases, touch the group heading provides edit options for the entire group, like thresholds, delays and enable/disable. Each event includes settings specific for that event and the notification option where event type and alarm notifications are selected (See Selecting Event Type and Setting Alarm/Warning Notification on the facing page). 1. Touch SERVICE, then ☰ > *Alarm/Event Setup*. The ALARMS & EVENTS panel opens. 2. Scroll or search to find the event, touch the set's heading to display theproperties and values for the entire set in the EDIT panel. – or – Touch an individual alarm or event to display it's specific values in the EDIT panel. iCOM Manual at p. 80. 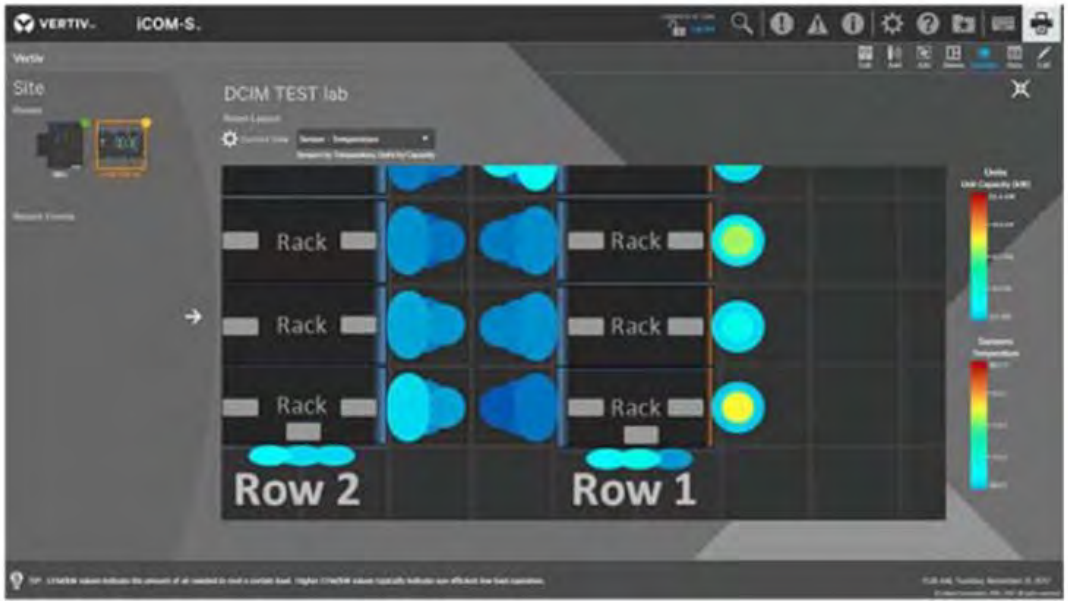

Claim 1	Exemplary Evidence of Infringement by DataBank
	https://www.dksh.com/global-en/products/iot/vertiv-thermal-control-and-monitoring DataBank also uses Automated Logic to identify pattern differentials between said empirical and template atmospheric maps. https://www.automatedlogic.com/en/media/WebCTRL_Building_Analytics_Brochure_April_2015_tcm702-100204.pdf, p. 2. Dynamic color floor plans provide an immediate understanding of conditions in your building in a single glance. https://www.automatedlogic.com/en/media/WebCTRL_Building_Analytics_Brochure_April_2015_tcm702-100204.pdf, p. 5.

Claim 1	Exemplary Evidence of Infringement by DataBank
	Thermographic Floor Plan Displays **See your building in living color.** Few operators have the time to sit in front of the computer comparing actual space temperatures with their set points – and with Automated Logic, they don't have to. A timeless and unmatched assessment tool, thermographic floor plan displays allow instantaneous recognition of building and zone conditions. A quick analysis of colors allows the operator to determine if there is an issue. By displaying information using colors rather than numerical data, we eliminate the need for human calculation and interpretation of set point and actual temperature difference, and help resolve whether there is a normal circumstance or an anomaly to be investigated. https://www.automatedlogic.com/en/media/WebCTRL_Building_Analytics_Brochure_April_2015_tcm702-100204.pdf, p. 5.

Exhibit 9

Infringement Claim Chart for U.S. Patent No. 6,854,284

Claim Language	Exemplary Evidence of Infringement by DataBank
[10pre] A method of cooling a plurality of racks in a data center, said method comprising:	DataBank uses a method of cooling a plurality of racks in a data center. For example, DataBank uses Schneider Electric's Uniflair perimeter cooling system for cooling a plurality of racks in its datacenter. DataBank established their relationship with Schneider Electric during the construction of their downtown Dallas facility. DataBank was impressed with the performance of the Schneider Electric PDUs and switchgear that were installed and moved forward with those products for their Northern Dallas facility as well. When reviewing their cooling infrastructure for the new facility, particularly the CRAC (computer room air conditioner) units, they turned to Schneider Electric as a trusted partner to provide an alternative solution. Schneider introduced DataBank to the Uniflair line of products that provides perimeter, chilled cooling for data centers. Uniflair Chilled Water products offer flexible cooling solutions perfect for lower density racked and non-racked IT loads. https://it-resource.schneider-electric.com/customer-testimonials/databank-case-study

	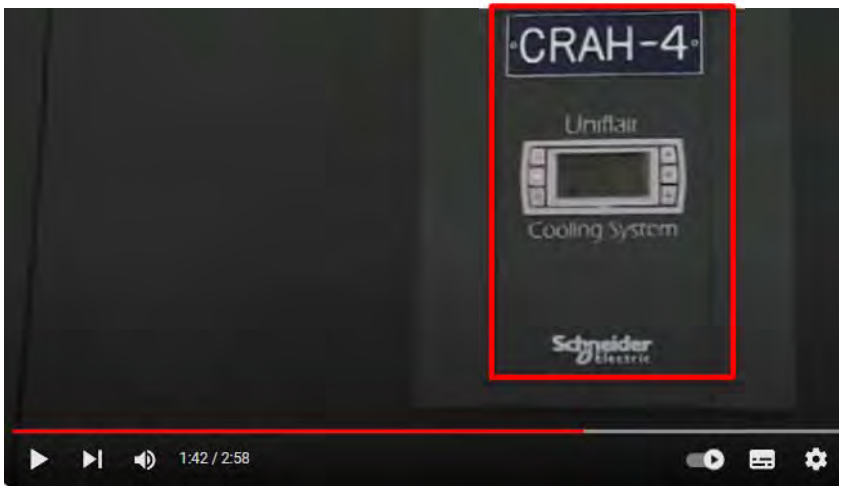 https://www.youtube.com/watch?app=desktop&v=p8pZapFAgn8, at 1:42. https://www.youtube.com/watch?app=desktop&v=p8pZapFAgn8, at 2:10.

	3 Ways to Leverage Liquid Cooling • One common cooling approach is **liquid-to-the-rack**, which uses cooling coils inserted into the rear doors of rack cabinets connected to the data center's chilled water loop. This advances the technique of running chilled water through a Computer Room Air Handler (CRAH) on the perimeter and blowing cold air into a data hall. The chilled liquid goes directly to the back of the cabinet doors. The hot air is cooled as it comes out the back of the cabinet—instead of having to travel all the way to a CRAH to get cooled. • For additional cooling capacity, some enterprises are turning to servers with **direct-to-chip cooling**. Inside the servers, tubes filled with liquid connect to cold plates sitting on top of the chips. https://www.databank.com/resources/blogs/balancing-efficiency-and-sustainability-the-role-of-liquid-cooling-in-data-centers/ **DataBank Chooses Schneider Electric's Uniflair Perimeter Cooling Solution for North Dallas Colocation Facility** https://finance.yahoo.com/news/databank-chooses-schneider-electrics-uniflair-140605904.html

	WEST KINGSTON, RI--(Marketwired - May 29, 2013) - Schneider Electric, a global specialist in energy management, today announced the installation of eighteen Uniflair perimeter cooling units into DataBank's North Dallas data center, a premier multi-tenant colocation facility located in Richardson, TX. DataBank, a leading provider of custom colocation solutions and services, chose Schneider Electric's Uniflair solution for its ability to offer more flexibility, increased air flow, serviceability and noise reduction to cool their new Tier III+, sixty-thousand square foot facility. DataBank's selection of the Uniflair perimeter cooling solution marks the largest installation Schneider Electric's Uniflair line in North America to date. https://finance.yahoo.com/news/databank-chooses-schneider-electrics-uniflair-140605904.html
[10a] activating a cooling system and opening a plurality of returns, said plurality of returns being configured to remove cooling fluid from various locations of said data center, said plurality of returns also being in fluid communication with a plenum, wherein cooling fluid is configured to flow through the plurality of returns through the plenum and into the cooling system;	Databank activates a cooling system and opening a plurality of returns, plurality of returns being configured to remove cooling fluid from various locations of said data center, the plurality of returns also being in fluid communication with a plenum, wherein cooling fluid is configured to flow through the plurality of returns through the plenum and into the cooling system. Databank uses multiple return-air plenums. For example, Databank's data center has an overhead return-air plenum. DataBank's East Twin Cities facility offers clients a top-tier data center environment in a highly secure office park setting. • **Southeast Twin Cities Location -** Eagan, MN strategic location offers utmost power & connectivity • **Large Footprint -** Over 50,000 square feet of customizable raised-floor data center space • **Highly Secure -** Layers of physical security & hardened-construction (FM150 Roofing, K-Rated fencing & bollards) • **Unsurpassed Design -** Uptime Institute Tier-III designed & built offers the premier MTDC environment in the region • **Robust Power -** True 2N Design delivers 20MW (10MW A & 10MW B) of power into the facility from diverse substations • **Advanced Cooling -** Tri-mode cooling units and large return-air plenum enable high-densities and the utmost efficiency • **On-Site Power Generation -** Dedicated A side & B side diesel power generators backup utility power to each data hall • **Carrier-Hotel Design -** Dual MMRs with multiple top-tier carriers & network providers offer unmatched connectivity • **Business Environment -** Eagan, MN offers a business-friendly location with AccessEagan fiber and office-ready space • **Tax Incentives -** Tax credits from the State of MN allow our clients to receive substantial savings on equipment & software

	https://ww1.prweb.com/prfiles/2017/08/17/14610507/DB_Properties-MSP2.pdf, at p. 1. For example, DataBank uses Schneider's Uniflair Cooling System which give each rack precision cooling. DataBank established their relationship with Schneider Electric during the construction of their downtown Dallas facility. DataBank was impressed with the performance of the Schneider Electric PDUs and switchgear that were installed and moved forward with those products for their Northern Dallas facility as well. When reviewing their cooling infrastructure for the new facility, particularly the CRAC (computer room air conditioner) units, they turned to Schneider Electric as a trusted partner to provide an alternative solution. Schneider introduced DataBank to the Uniflair line of products that provides perimeter, chilled cooling for data centers. Uniflair Chilled Water products offer flexible cooling solutions perfect for lower density racked and non-racked IT loads. https://it-resource.schneider-electric.com/customer-testimonials/databank-case-study Further, Schneider's cooling units include a duct for removal of hot air which is connected to a plenum. All the below displayed orange-colored arrows are returns configured to discharge hot air.

	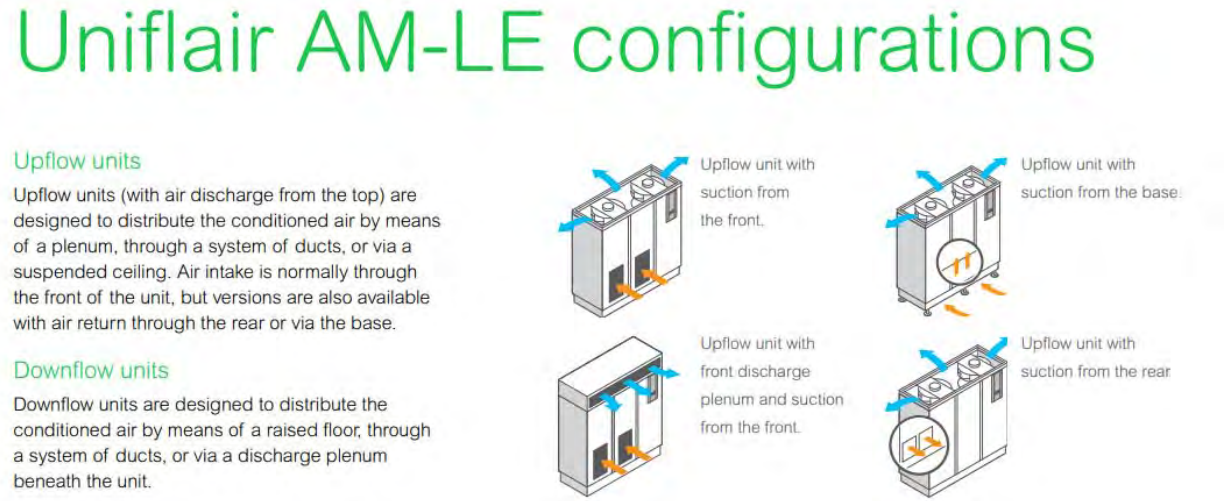 http://www.uniflair.co.uk/pdfs/CRAC-brochure-2017.pdf, p. 16 DataBank also uses overhead return plenums which are connected to return ducts to remove cooling fluid from various locations of said data center. The air in the plenum is then cooled.

	DataBank-richardson-cracs The air handler units at the perimeter of the new data hall in the North Dallas data center. The return ducts connect to an overhead return plenum. The air is then cooled and distributed via the three-foot raised floor. (Photo: DataBank) https://www.datacenterknowledge.com/business/databank-grows-beyond-its-dallas-digital-fortress
[10b] sensing a pressure of said cooling fluid in the plenum;	Databank senses pressure of the cooling fluid in the plenum For example, Databank uses Schneider Electric's EcoStruxture software for data structure infrastructure management in which plenum pressure is sensed.

	DATABANK Data Centers Solutions Compliance About Us • Hurricane-rated, steel wall, hardened exterior • 325+ sq. ft. of colocation space • Full, Half, 1/3, and 1/4 cabinet configurations • Electrical: 100kW, 600AMP 120/240 Volt single-phase or three-phase w/400 or 800 AMP • Generators: 175kW 600 or 800 AMP • Fuel Storage: 48 hour/415 gallon • UPS: Smart-UPS, 5kVA-240VAC • Cooling: (4) 11 Ton 2-stage units • Security: Dual-factor biometric authentication, mantraps, and indoor/outdoor security cameras • Power Monitoring: Schneider EcoStruxture, DCIM environmental, power monitoring & control https://www.databank.com/solutions/colocation/modular-edge-datacenters/

	Life Is On Schneider Electric Search products, documents & more Products Software Services Solutions Homeowner Support Company For Your Business > Solutions > EcoStruxure for your Business > Data Centers and Networks > DCIM Software **Data centre management** DCIM stands for data centre infrastructure management. DCIM software is used to monitor, measure, and manage data centres, covering both IT equipment and supporting infrastructure such as power and cooling systems. It is intended to help managers achieve maximum energy efficiency and to help prevent equipment problems that lead to downtime. https://www.se.com/au/en/work/solutions/for-business/data-centers-and-networks/dcim-software/

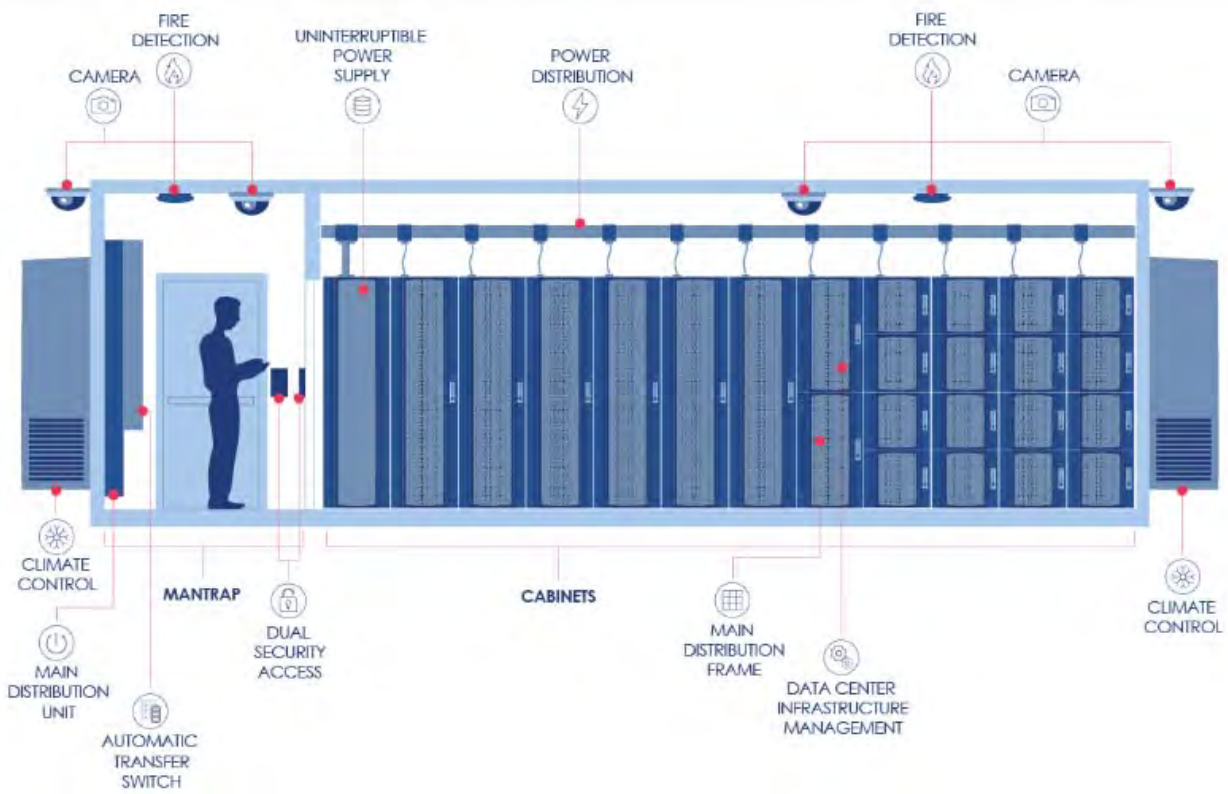

- Power Monitoring: Schneider EcoStruxture, DCIM environmental, power monitoring & control
- Security Monitoring: 7x24x365 NOC monitoring of security cameras

https://www.databank.com/solutions/colocation/modular-edge-datacenters/

https://www.capital.bg/getatt.php?filename=oo_3171693.pdf, at p. 32.

Plenum

A pocket of space used for air distribution below a raised floor or above a suspended ceiling.

https://www.se.com/in/en/download/document/998-19885906_GMA-US_ESX/, at p. 92.

	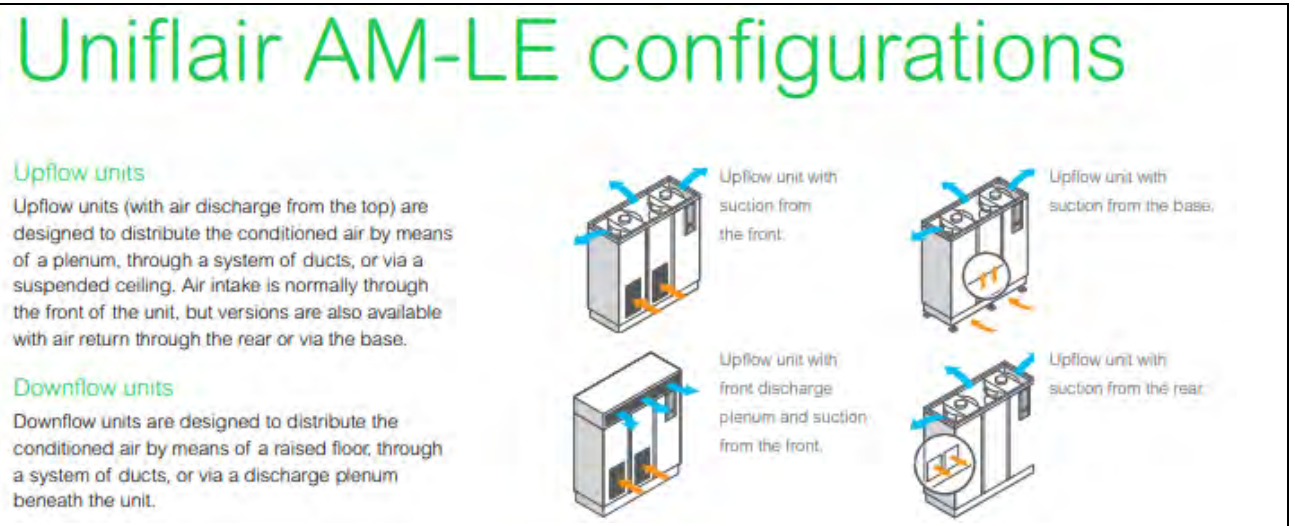 http://www.uniflair.co.uk/pdfs/CRAC-brochure-2017.pdf, at p. 16. Databank has an overhead return plenum.

	The air handler units at the perimeter of the new data hall in the North Dallas data center. The return ducts connect to an overhead return plenum. The air is then cooled and distributed via the three-foot raised floor. (Photo: DataBank) DataBank-richardson-datahal https://www.datacenterknowledge.com/business/databank-grows-beyond-its-dallas-digital-fortress

	UNIFLAIR™ The solution is particularly applicable for Chilled Water installations where the air flow can be adjusted to a very low minimum level (20% on cooling only units). AFPS can also be used on installations for DX systems (air or water cooled) which include multiple Uniflair units. AFPS also includes the following additional features; • Adjustable constant under-floor pressurisation from each unit • Control to the average pressure as measured by any group of Uniflair units connected in LAN. • Revert to independent control should any Uniflair unit measure excessive ΔP. • Each Uniflair unit operates at maximum speed should its microprocessor fail (all others in LAN will reduce speed automatically). • Each Uniflair unit will operate at maximum speed should any sensor be damaged (all others in LAN will reduce speed automatically). • Revert to independent control should the LAN fail. • Up to 10 units on one LAN http://www.uniflair.co.uk/pdfs/AFPS.pdf
[10c] determining whether said sensed pressure is within a predetermined pressure range; and	Databank determines whether sensed pressure is within a predetermined pressure range. For example, Databank's Uniflair systems maintain a constant predetermined floor pressure range.

	UNIFLAIR™ The solution is particularly applicable for Chilled Water installations where the air flow can be adjusted to a very low minimum level (20% on cooling only units). AFPS can also be used on installations for DX systems (air or water cooled) which include multiple Uniflair units. AFPS also includes the following additional features; • Adjustable constant under-floor pressurisation from each unit • Control to the average pressure as measured by any group of Uniflair units connected in LAN. • Revert to independent control should any Uniflair unit measure excessive ΔP. • Each Uniflair unit operates at maximum speed should its microprocessor fail (all others in LAN will reduce speed automatically). • Each Uniflair unit will operate at maximum speed should any sensor be damaged (all others in LAN will reduce speed automatically). • Revert to independent control should the LAN fail. • Up to 10 units on one LAN http://www.uniflair.co.uk/pdfs/AFPS.pdf
[10d] varying an intake of said cooling system through the plurality of returns in response to said sensed pressure	Databank varies the intake of cooling system through the plurality of returns in response to sensed pressure falling outside of said predetermined pressure range. For example, DCIM changes the CRAH fan speed in order to change the pressure of air flow.

falling outside of said predetermined pressure range.	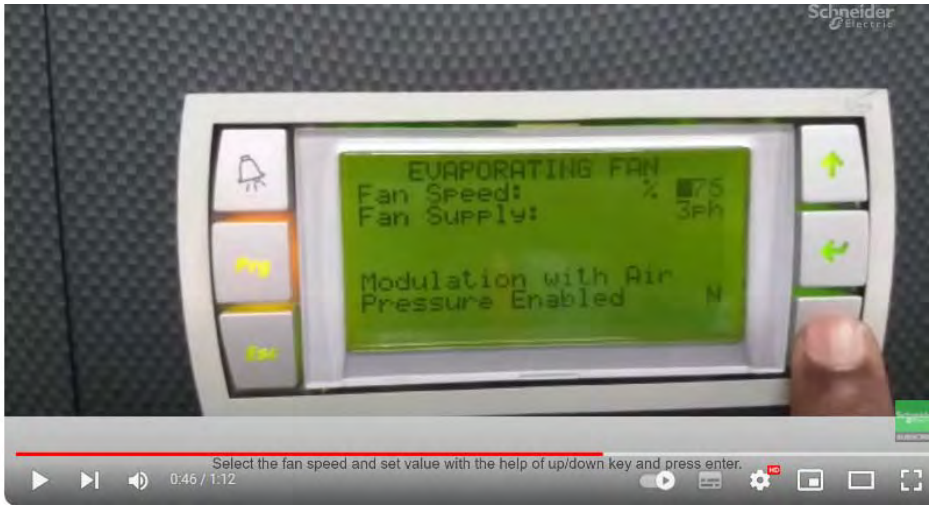 https://www.youtube.com/watch?v=wcPOrsrblUM, at 0:46.

UNIFLAIR™

The solution is particularly applicable for Chilled Water installations where the air flow can be adjusted to a very low minimum level (20% on cooling only units). AFPS can also be used on installations for DX systems (air or water cooled) which include multiple Uniflair units.

AFPS also includes the following additional features;

- Adjustable constant under-floor pressurisation from each unit
- Control to the average pressure as measured by any group of Uniflair units connected in LAN.
- Revert to independent control should any Uniflair unit measure excessive ΔP.
- Each Uniflair unit operates at maximum speed should its microprocessor fail (all others in LAN will reduce speed automatically).
- Each Uniflair unit will operate at maximum speed should any sensor be damaged (all others in LAN will reduce speed automatically).
- Revert to independent control should the LAN fail.
- Up to 10 units on one LAN

http://www.uniflair.co.uk/pdfs/AFPS.pdf

Exhibit 10

Infringement Claim Chart for U.S. Patent No. 6,868,682

Claim Language	Exemplary Evidence of Infringement by DataBank
[1pre] A method of controlling the temperature in a data center comprising:	DataBank uses Trane's RTAC chillers to implement a method for controlling the temperature in a data center comprising the limitations below. For example, DataBank's Houston Data Center uses Trane's RTAC chillers to implement a method for controlling the temperature in a data center, as shown below. 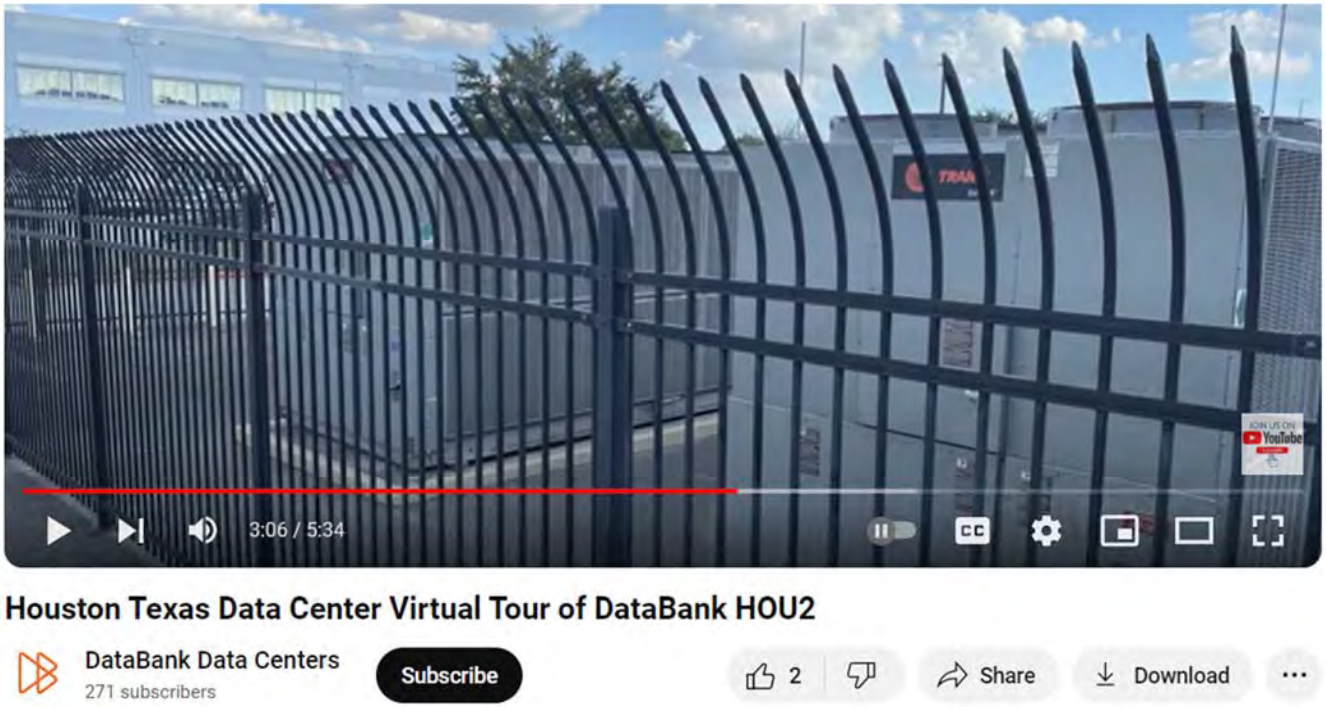 https://www.youtube.com/watch?v=o5Yg3bq1Utk, at 3:06.

Infringement Claim Chart for U.S. Patent No. 6,868,682

Claim Language	Exemplary Evidence of Infringement by DataBank
	TRANE® Product Catalog **Air-Cooled Series R® Chillers** **Model RTAC** 140 to 500 nominal tons (60 Hz)

Infringement Claim Chart for U.S. Patent No. 6,868,682

Claim Language	Exemplary Evidence of Infringement by DataBank

Infringement Claim Chart for U.S. Patent No. 6,868,682

Claim Language	Exemplary Evidence of Infringement by DataBank
	Precise Capacity Control Trane's patented unloading system allows the compressor to modulate infinitely and exactly match building loads. At the same time chilled water temperatures will be maintained within +/- 1/2°F (0.28°C) of setpoint. Screw or scroll chillers with stepped capacity control do well to maintain chilled water temperatures within 2°F (1.1°C) of setpoint. Stepped control also results in over cooling because rarely does the capacity of the machine match the building load. The result can be 10% higher energy bills. Trane's RTAC optimizes the part load performance of your machine for energy efficiency, precise control for process applications, and your personal comfort regardless of the weather outside. **Integrated Rapid Restart** • Bringing a chiller back online rapidly after a loss of power is critical to operations in mission critical environments like data centers and hospitals which demand the highest levels of reliability. • A loss of cooling capacity can be costly, which is why Trane chillers are designed and engineered for Rapid Restart. This not only helps the chiller get back online faster, but it also provides a simple and reliable solution to minimize the risks of financially devastating damage to assets caused by overheating due to a power loss. • Of course, the truest test of a chiller's restart capabilities is the amount of time it takes to resume full-load cooling, and this is where the Trane chiller really shines. An 80 percent cooling load can be achieved in less than 2.5 minutes after power restoration—your assurance that the cooling capacity your equipment requires is just a few minutes away. https://www.trane.com/content/dam/Trane/Commercial/global/products-systems/equipment/chillers/air-cooled/RLC-PRC006T-EN_04242020.pdf
[1a] receiving sensory data corresponding to a temperature from a subsystem in a data center;	Trane's RTAC chillers at DataBank facilities receive sensory data corresponding to a temperature from a subsystem in a data center, as illustrated below.

Infringement Claim Chart for U.S. Patent No. 6,868,682

Claim Language	Exemplary Evidence of Infringement by DataBank
	Evaporator The evaporator is a tube-in-shell heat exchanger design with internally and externally finned copper tubes roller expanded into the tube sheet. The evaporator is designed, tested and stamped in accordance with ASME for a refrigerant side working pressure of 200 psig. The evaporator is designed for a water side working pressure of 150 psig. Water connections are grooved pipe. Each shell includes a vent, a drain and fittings for temperature control sensors and is insulated with 3/4 inch equal insulation (K=0.28). Evaporator heaters with thermostat are provided to help protect the evaporator from freezing at ambient temperatures down to -20°F (-29°C). Factory installed flow switch is installed on a pipe stub in the evaporator inlet. **Chilled Water Reset** This provides the control logic and factory installed sensors to reset leaving chilled water temperature. The setpoint can be reset based on ambient temperature or return evaporator water temperature. **Flow Control** The factory installed flow switch is provided with the control logic and relays to turn the chilled water flow on and off as the chiller requires for operation and protection. This function is a requirement on the air-cooled Series R® chiller. https://www.trane.com/content/dam/Trane/Commercial/global/products-systems/equipment/chillers/air-cooled/RLC-PRC006T-EN_04242020.pdf

Infringement Claim Chart for U.S. Patent No. 6,868,682

Claim Language	Exemplary Evidence of Infringement by DataBank
	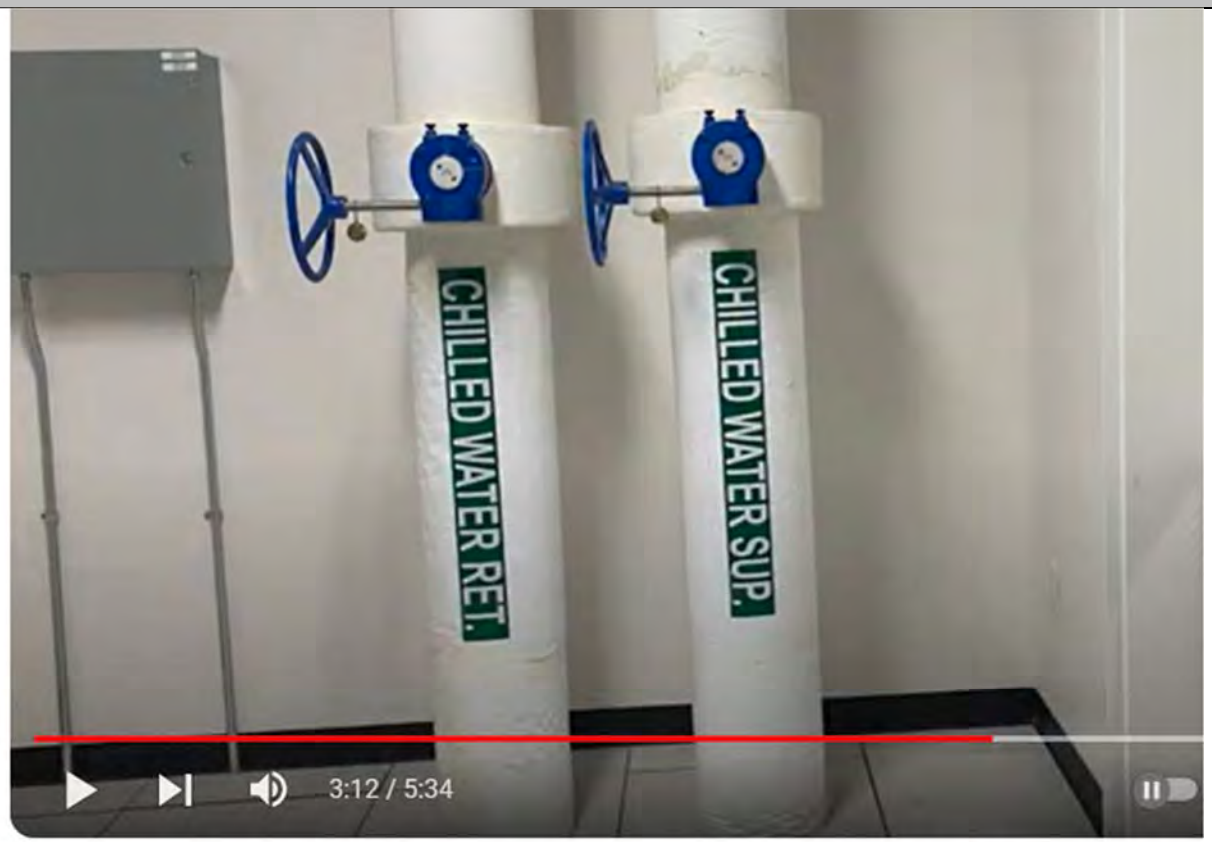 Houston Texas Data Center Virtual Tour of DataBank HOU2 DataBank Data Centers 271 subscribers Subscribe 2 https://www.youtube.com/watch?v=o5Yg3bq1Utk, at 3:12.

Infringement Claim Chart for U.S. Patent No. 6,868,682

Claim Language	Exemplary Evidence of Infringement by DataBank
[1b] processing the sensory data by a first agent in a hierarchy of agents to determine if the subsystems in the data center is operating within a predetermined temperature range;	Trane's RTAC chillers at DataBank facilities process the sensory data by a first agent in a hierarchy of agents to determine if the subsystems in the data center are operating within a predetermined temperature range, as illustrated below. The "first agent" corresponds to Chiller 2 and the "second agent" corresponds to Chiller 1, as shown below. **Figure 3. Typical series chiller arrangement** 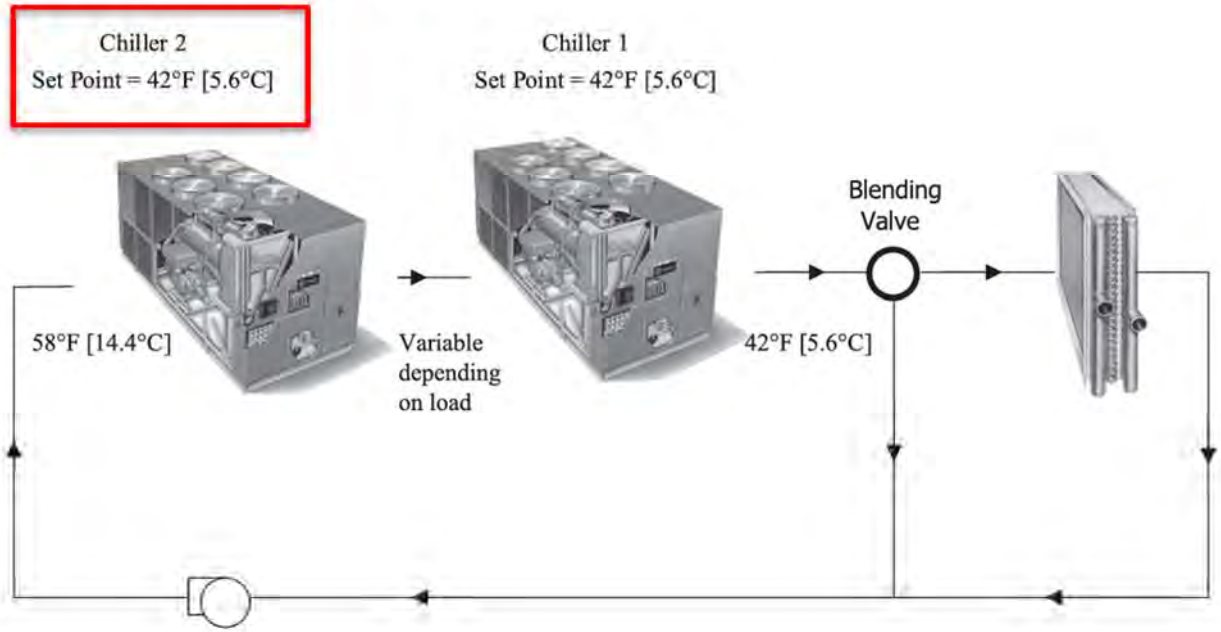

Infringement Claim Chart for U.S. Patent No. 6,868,682

Claim Language	Exemplary Evidence of Infringement by DataBank
	Series Chiller Arrangements Another energy saving strategy is to design the system around chillers arranged in series. The actual savings possible with such strategies depends on the application dynamics and should be researched by consulting your Trane Systems Solutions Representative and applying an analysis tool from the Trace software family. It is possible to operate a pair of chillers more efficiently in a series chiller arrangement than in a parallel arrangement. It is also possible to achieve higher entering to leaving chiller differentials, which may, in turn, provide the opportunity for lower chilled water design temperature, lower design flow, and resulting installation and operational cost savings. The Trane screw compressor also has excellent capabilities for "lift," which affords an opportunity for "lift," which affords an opportunity for savings on the evaporator water loop. Series chiller arrangements can be controlled in several ways. Figure A3 shows a strategy where each chiller is trying to achieve the system design set point. If the cooling load is less than 50 percent of the systems capabilities, either chiller can fulfill the demand. As system loads increase, the Chiller 2 becomes preferentially loaded as it attempts to meet the leaving chilled water setpoint. Chiller 1 will finish cooling the leaving water from Chiller 2 down to the system design setpoint. https://www.trane.com/content/dam/Trane/Commercial/global/products-systems/equipment/chillers/air-cooled/RLC-PRC006T-EN_04242020.pdf
[1c] adjusting a delivery rate for a cooling fluid using the first agent to keep the temperature range of the subsystem within the predetermined temperature range; and	Trane's RTAC chillers at DataBank facilities adjust a delivery rate for a cooling fluid using the first agent to keep the temperature range of the subsystem within the predetermined temperature range, as illustrated below.

Infringement Claim Chart for U.S. Patent No. 6,868,682

Claim Language	Exemplary Evidence of Infringement by DataBank
	Series Chiller Arrangements Another energy saving strategy is to design the system around chillers arranged in series. The actual savings possible with such strategies depends on the application dynamics and should be researched by consulting your Trane Systems Solutions Representative and applying an analysis tool from the Trace software family. It is possible to operate a pair of chillers more efficiently in a series chiller arrangement than in a parallel arrangement. It is also possible to achieve higher entering to leaving chiller differentials, which may, in turn, provide the opportunity for lower chilled water design temperature, lower design flow, and resulting installation and operational cost savings. The Trane screw compressor also has excellent capabilities for "lift," which affords an opportunity for "lift," which affords an opportunity for savings on the evaporator water loop. Series chiller arrangements can be controlled in several ways. Figure A3 shows a strategy where each chiller is trying to achieve the system design set point. If the cooling load is less than 50 percent of the systems capabilities, either chiller can fulfill the demand. As system loads increase, the Chiller 2 becomes preferentially loaded as it attempts to meet the leaving chilled water setpoint. Chiller 1 will finish cooling the leaving water from Chiller 2 down to the system design setpoint. **Adaptive Controls** Adaptive Controls directly sense the control variables that govern the operation of the chiller: evaporator pressure and condenser pressure. When any one of these variables approaches a limit condition when damage may occur to the unit or shutdown on a safety, Adaptive Controls takes corrective action to avoid shutdown and keep the chiller operating. This happens through combined actions of compressor and/or fan staging. Whenever possible, the chiller is allowed to continue making chilled water. This keeps cooling capacity available until the problem can be solved. Overall, the safety controls help keep the building or process running and out of trouble. https://www.trane.com/content/dam/Trane/Commercial/global/products-systems/equipment/chillers/air-cooled/RLC-PRC006T-EN_04242020.pdf

Infringement Claim Chart for U.S. Patent No. 6,868,682

Claim Language	Exemplary Evidence of Infringement by DataBank
	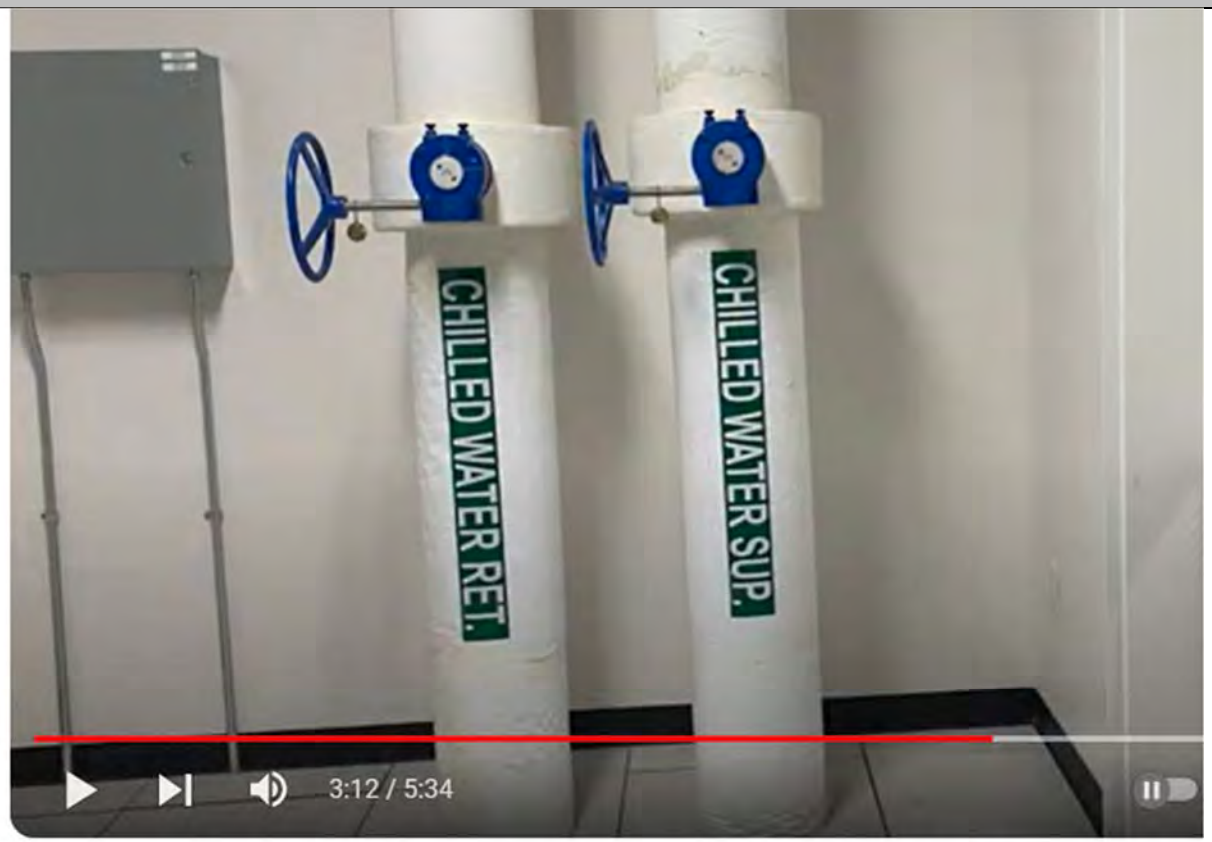 Houston Texas Data Center Virtual Tour of DataBank HOU2 DataBank Data Centers 271 subscribers Subscribe 2 https://www.youtube.com/watch?v=o5Yg3bq1Utk, at 3:12.

Infringement Claim Chart for U.S. Patent No. 6,868,682

Claim Language	Exemplary Evidence of Infringement by DataBank
[1d] requesting a second agent from the hierarchy of agents to process the sensory data when the first agent cannot keep the temperature range within the predetermined temperature range unless the second agent redistributes the cooling fluid being delivered to one or more areas in the data center.	Trane's RTAC chillers at DataBank facilities request a second agent from the hierarchy of agents to process the sensory data when the first agent cannot keep the temperature range within the predetermined temperature range unless the second agent redistributes the cooling fluid being delivered to one or more areas in the data center, as illustrated below. "Chiller 1" corresponds to the "second agent" claimed. **Series Chiller Arrangements** Another energy saving strategy is to design the system around chillers arranged in series. The actual savings possible with such strategies depends on the application dynamics and should be researched by consulting your Trane Systems Solutions Representative and applying an analysis tool from the Trace software family. It is possible to operate a pair of chillers more efficiently in a series chiller arrangement than in a parallel arrangement. It is also possible to achieve higher entering to leaving chiller differentials, which may, in turn, provide the opportunity for lower chilled water design temperature, lower design flow, and resulting installation and operational cost savings. The Trane screw compressor also has excellent capabilities for "lift," which affords an opportunity for "lift," which affords an opportunity for savings on the evaporator water loop. Series chiller arrangements can be controlled in several ways. Figure A3 shows a strategy where each chiller is trying to achieve the system design set point. If the cooling load is less than 50 percent of the systems capabilities, either chiller can fulfill the demand. As system loads increase, the Chiller 2 becomes preferentially loaded as it attempts to meet the leaving chilled water setpoint. Chiller 1 will finish cooling the leaving water from Chiller 2 down to the system design setpoint.

Infringement Claim Chart for U.S. Patent No. 6,868,682

Claim Language	Exemplary Evidence of Infringement by DataBank
	Adaptive Controls Adaptive Controls directly sense the control variables that govern the operation of the chiller: evaporator pressure and condenser pressure. When any one of these variables approaches a limit condition when damage may occur to the unit or shutdown on a safety, Adaptive Controls takes corrective action to avoid shutdown and keep the chiller operating. This happens through combined actions of compressor and/or fan staging. Whenever possible, the chiller is allowed to continue making chilled water. This keeps cooling capacity available until the problem can be solved. Overall, the safety controls help keep the building or process running and out of trouble. **Figure 3. Typical series chiller arrangement** 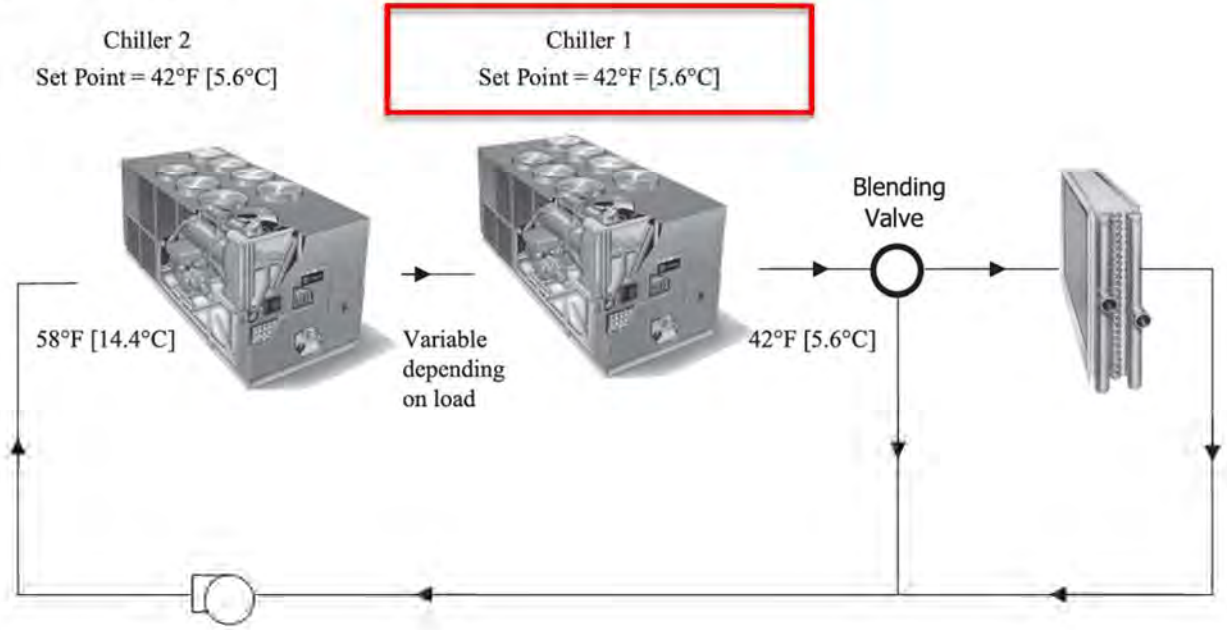 https://www.trane.com/content/dam/Trane/Commercial/global/products-systems/equipment/chillers/air-cooled/RLC-PRC006T-EN_04242020.pdf

Infringement Claim Chart for U.S. Patent No. 6,868,682

Claim Language	Exemplary Evidence of Infringement by DataBank
	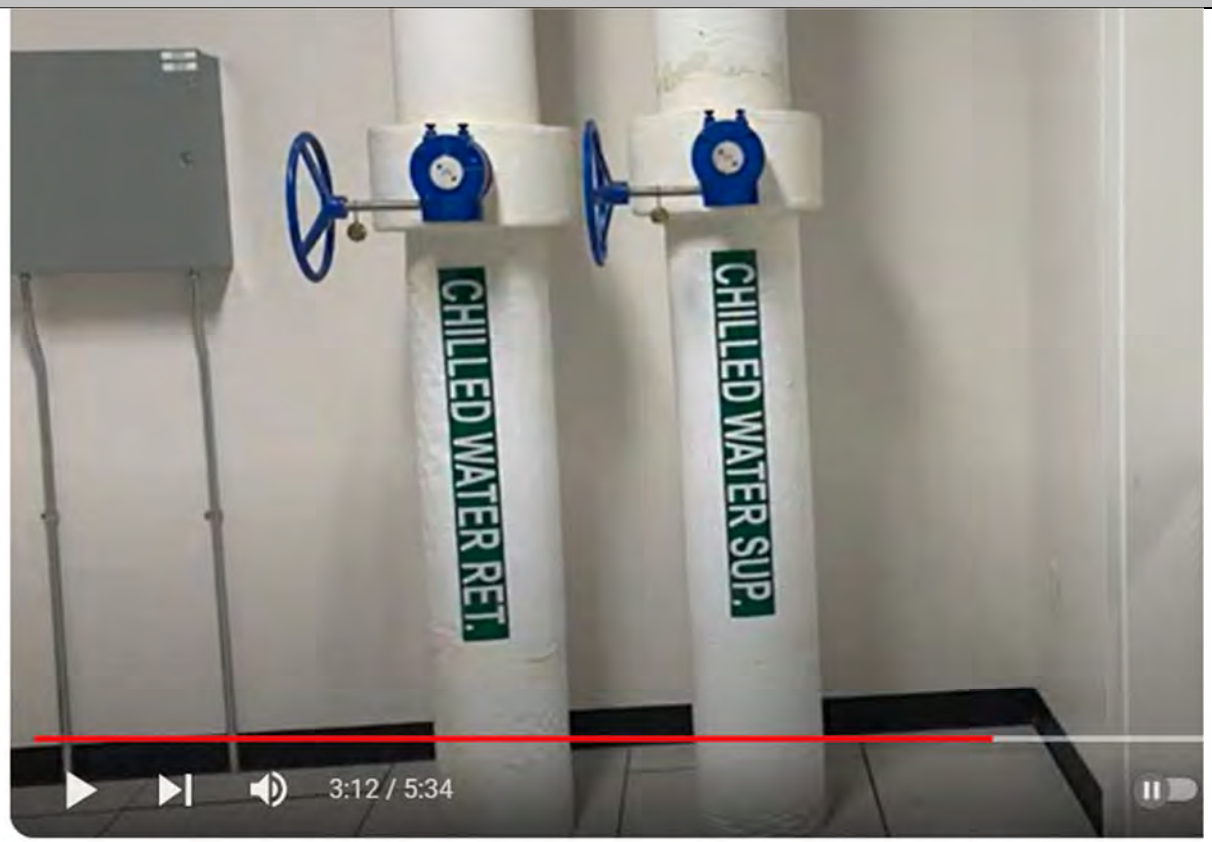 Houston Texas Data Center Virtual Tour of DataBank HOU2 DataBank Data Centers 271 subscribers Subscribe 2 https://www.youtube.com/watch?v=o5Yg3bq1Utk, at 3:12.

Exhibit 11

U.S. Patent No. 6,868,683– Infringement Claim Chart

Claim Language	Exemplary Evidence of Infringement by DataBank
[10pre] A method of cooling a plurality of racks in a data center, said method comprising:	DataBank uses a method of cooling a plurality of racks in a data center. For example, DataBank uses Schneider Electric's Uniflair perimeter cooling system for cooling a plurality of racks in its data center. DataBank established their relationship with Schneider Electric during the construction of their downtown Dallas facility. DataBank was impressed with the performance of the Schneider Electric PDUs and switchgear that were installed and moved forward with those products for their Northern Dallas facility as well. When reviewing their cooling infrastructure for the new facility, particularly the CRAC (computer room air conditioner) units, they turned to Schneider Electric as a trusted partner to provide an alternative solution. Schneider introduced DataBank to the Uniflair line of products that provides perimeter, chilled cooling for data centers. Uniflair Chilled Water products offer flexible cooling solutions perfect for lower density racked and non-racked IT loads. https://it-resource.schneider-electric.com/customer-testimonials/databank-case-study

	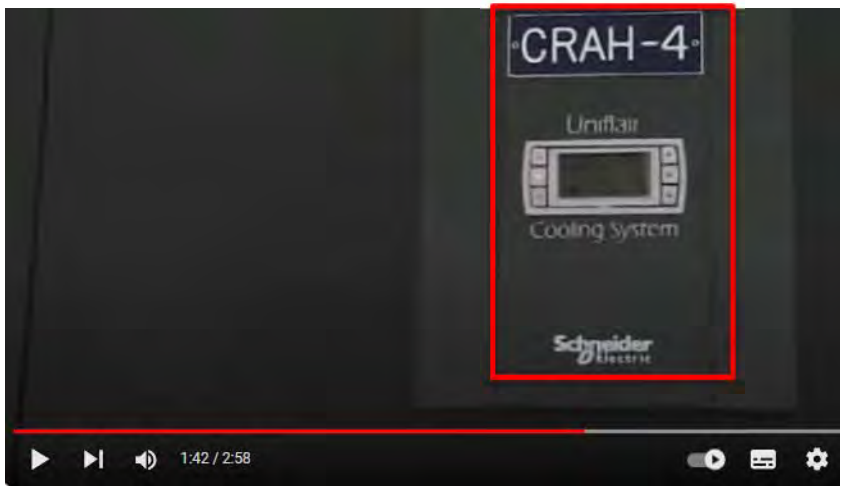 https://www.youtube.com/watch?app=desktop&v=p8pZapFAgn8, at 1:42. https://www.youtube.com/watch?app=desktop&v=p8pZapFAgn8, at 2:10.

	3 Ways to Leverage Liquid Cooling • One common cooling approach is **liquid-to-the-rack**, which uses cooling coils inserted into the rear doors of rack cabinets connected to the data center's chilled water loop. This advances the technique of running chilled water through a Computer Room Air Handler (CRAH) on the perimeter and blowing cold air into a data hall. The chilled liquid goes directly to the back of the cabinet doors. The hot air is cooled as it comes out the back of the cabinet—instead of having to travel all the way to a CRAH to get cooled. • For additional cooling capacity, some enterprises are turning to servers with **direct-to-chip cooling**. Inside the servers, tubes filled with liquid connect to cold plates sitting on top of the chips. https://www.databank.com/resources/blogs/balancing-efficiency-and-sustainability-the-role-of-liquid-cooling-in-data-centers/ **DataBank Chooses Schneider Electric's Uniflair Perimeter Cooling Solution for North Dallas Colocation Facility** https://finance.yahoo.com/news/databank-chooses-schneider-electrics-uniflair-140605904.html

	WEST KINGSTON, RI--(Marketwired - May 29, 2013) - Schneider Electric, a global specialist in energy management, today announced the installation of eighteen Uniflair perimeter cooling units into DataBank's North Dallas data center, a premier multi-tenant colocation facility located in Richardson, TX. DataBank, a leading provider of custom colocation solutions and services, chose Schneider Electric's Uniflair solution for its ability to offer more flexibility, increased air flow, serviceability and noise reduction to cool their new Tier III+, sixty-thousand square foot facility. DataBank's selection of the Uniflair perimeter cooling solution marks the largest installation Schneider Electric's Uniflair line in North America to date. https://finance.yahoo.com/news/databank-chooses-schneider-electrics-uniflair-140605904.html For example, Uniflair line of products also "offer flexible cooling solutions perfect for lower density racked and non-racked IT loads."

	DataBank Case Study DataBank established their relationship with Schneider Electric during the construction of their downtown Dallas facility. DataBank was impressed with the performance of the Schneider Electric PDUs and switchgear that were installed and moved forward with those products for their Northern Dallas facility as well. When reviewing their cooling infrastructure for the new facility, particularly the CRAC (computer room air conditioner) units, they turned to Schneider Electric as a trusted partner to provide an alternative solution. Schneider introduced DataBank to the Uniflair line of products that provides perimeter, chilled cooling for data centers. Uniflair Chilled Water products offer flexible cooling solutions perfect for lower density racked and non-racked IT loads. Watch Now! https://it-resource.schneider-electric.com/customer-testimonials/databank-case-study
[10a] activating a cooling system and opening a plurality of returns, said returns being configured to remove cooling fluid from various locations of said data center;	DataBank uses a method for activating a cooling system and opening a plurality of returns, said returns being configured to remove cooling fluid from various locations of said data center. For example, DataBank uses Schneider's Uniflair Cooling System which is configured to remove cooling fluid from various locations of the data center.

DataBank established their relationship with Schneider Electric during the construction of their downtown Dallas facility. DataBank was impressed with the performance of the Schneider Electric PDUs and switchgear that were installed and moved forward with those products for their Northern Dallas facility as well. When reviewing their cooling infrastructure for the new facility, particularly the CRAC (computer room air conditioner) units, they turned to Schneider Electric as a trusted partner to provide an alternative solution.

Schneider introduced DataBank to the Uniflair line of products that provides perimeter, chilled cooling for data centers. Uniflair Chilled Water products offer flexible cooling solutions perfect for lower density racked and non-racked IT loads.

https://it-resource.schneider-electric.com/customer-testimonials/databank-case-study

Further, Schneider's cooling units include a duct for removal of hot air which are connected to a plenum. All the above displayed orange-colored arrows are returns configured to discharge hot air.

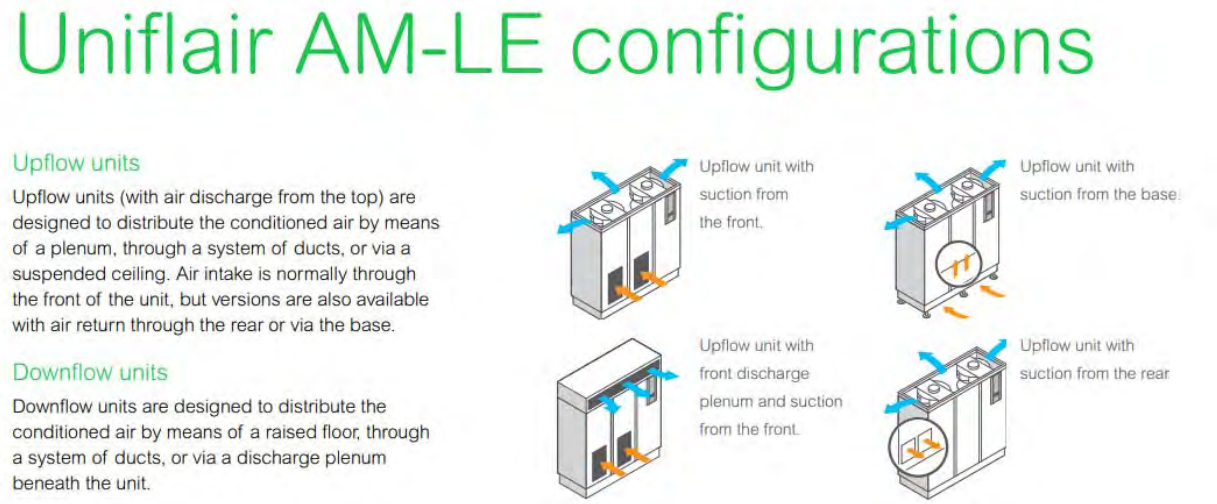

http://www.uniflair.co.uk/pdfs/CRAC-brochure-2017.pdf, p. 16.

	DataBank also uses overhead return plenums which are connected to return ducts to remove cooling fluid from various locations of said data center. DataBank-richardson-cracs The air handler units at the perimeter of the new data hall in the North Dallas data center. The return ducts connect to an overhead return plenum. The air is then cooled and distributed via the three-foot raised floor. (Photo: DataBank) https://www.datacenterknowledge.com/business/databank-grows-beyond-its-dallas-digital-fortress
[10b] supplying cooling fluid to various locations of the data center;	DataBank uses a method for supplying cooling fluid to various locations of the data center. For example, DataBank uses Uniflair Cooling system which delivers consistent air supply to various locations, such as racks, of the data centers. The arrows shown in blue depict the direction of flow of cooling fluid.

Uniflair AM-LE configurations

Upflow units

Upflow units (with air discharge from the top) are designed to distribute the conditioned air by means of a plenum, through a system of ducts, or via a suspended ceiling. Air intake is normally through the front of the unit, but versions are also available with air return through the rear or via the base.

Downflow units

Downflow units are designed to distribute the conditioned air by means of a raised floor, through a system of ducts, or via a discharge plenum beneath the unit.

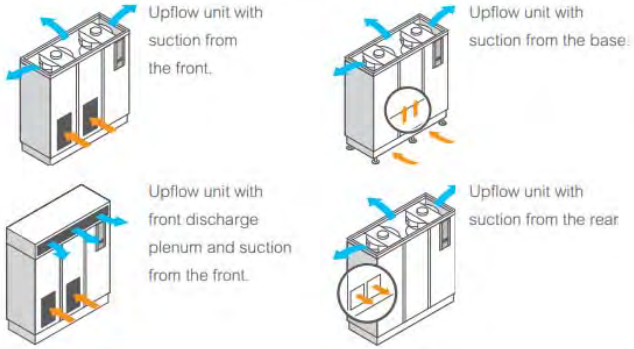

http://www.uniflair.co.uk/pdfs/CRAC-brochure-2017.pdf, p. 16.

The air is cooled and then distributed to the racks via a three-foot raised floor.

DataBank-richardson-cracs

The air handler units at the perimeter of the new data hall in the North Dallas data center. The return ducts connect to an overhead return plenum. The air is then cooled and distributed via the three-foot raised floor. (Photo: DataBank)

	https://www.datacenterknowledge.com/business/databank-grows-beyond-its-dallas-digital-fortress
[10c] sensing the temperatures of said racks;	DataBank senses the temperature of the racks. For example, Databank senses temperature of the racks via sensors installed throughout the data centers. DATABANK Data Centers Solutions Compliance About Us • Hurricane-rated, steel wall, hardened exterior • 325+ sq. ft. of colocation space • Full, Half, 1/3, and 1/4 cabinet configurations • Electrical: 100kW, 600AMP 120/240 Volt single-phase or three-phase w/400 or 800 AMP • Generators: 175kW 600 or 800 AMP • Fuel Storage: 48 hour/415 gallon • UPS: Smart-UPS, 5kVA-240VAC • Cooling: (4) 11 Ton 2-stage units • Security: Dual-factor biometric authentication, mantraps, and indoor/outdoor security cameras • Power Monitoring: Schneider EcoStruxture, DCIM environmental, power monitoring & control https://www.databank.com/solutions/colocation/modular-edge-datacenters/

	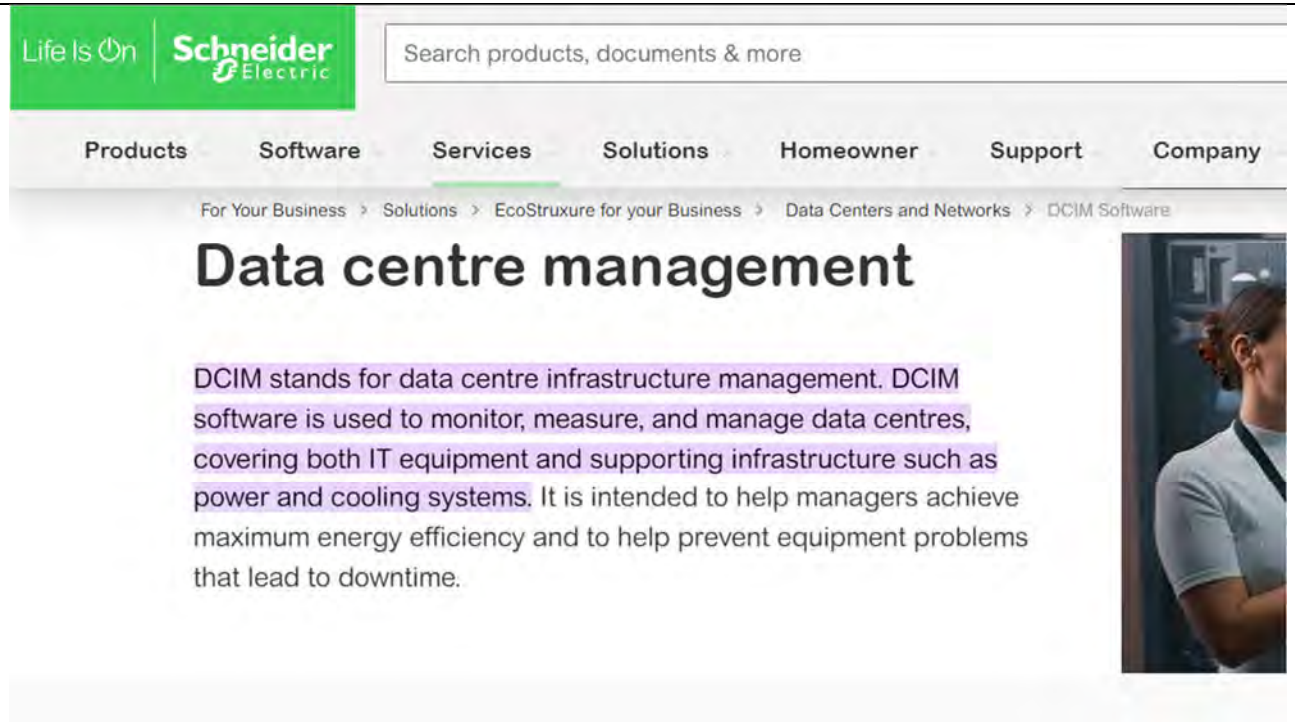 https://www.se.com/au/en/work/solutions/for-business/data-centers-and-networks/dcim-software/

	DATABANK Data Centers Solutions Compliance About Us **Maintenance and monitoring** Regular maintenance and continuous monitoring are crucial for the long-term success of hot and cold aisle containment. Physical barriers should be inspected regularly for damage or gaps that could compromise the containment system's integrity. Any detected issues should be promptly repaired or replaced. Airflow management requires ongoing adjustments to maintain optimal cooling efficiency; this includes checking and cleaning filters and ducts to ensure unobstructed airflow. Temperature sensors should be installed throughout the data center to provide real-time monitoring of conditions. These sensors should be placed in both hot and cold aisles to track temperature variations accurately. Monitoring software can analyze this data to identify trends and potential issues, enabling proactive adjustments to maintain optimal performance. Regularly reviewing the collected data ensures that the containment system continues to operate efficiently, maximizing its energy-saving benefits.

[10d] determining whether said sensed temperatures are within a predetermined temperature range;	Databank determines whether said sensed temperatures are within a predetermined temperature range. For example, in the Uniflair cooling system there is an option for setting a temperature threshold and determining whether the sensed temperatures are within in a predetermined temperature range. For example, Databank collects sensed temperature from the sensor, analyzes it and scales it with respect to the high/low temp set points. 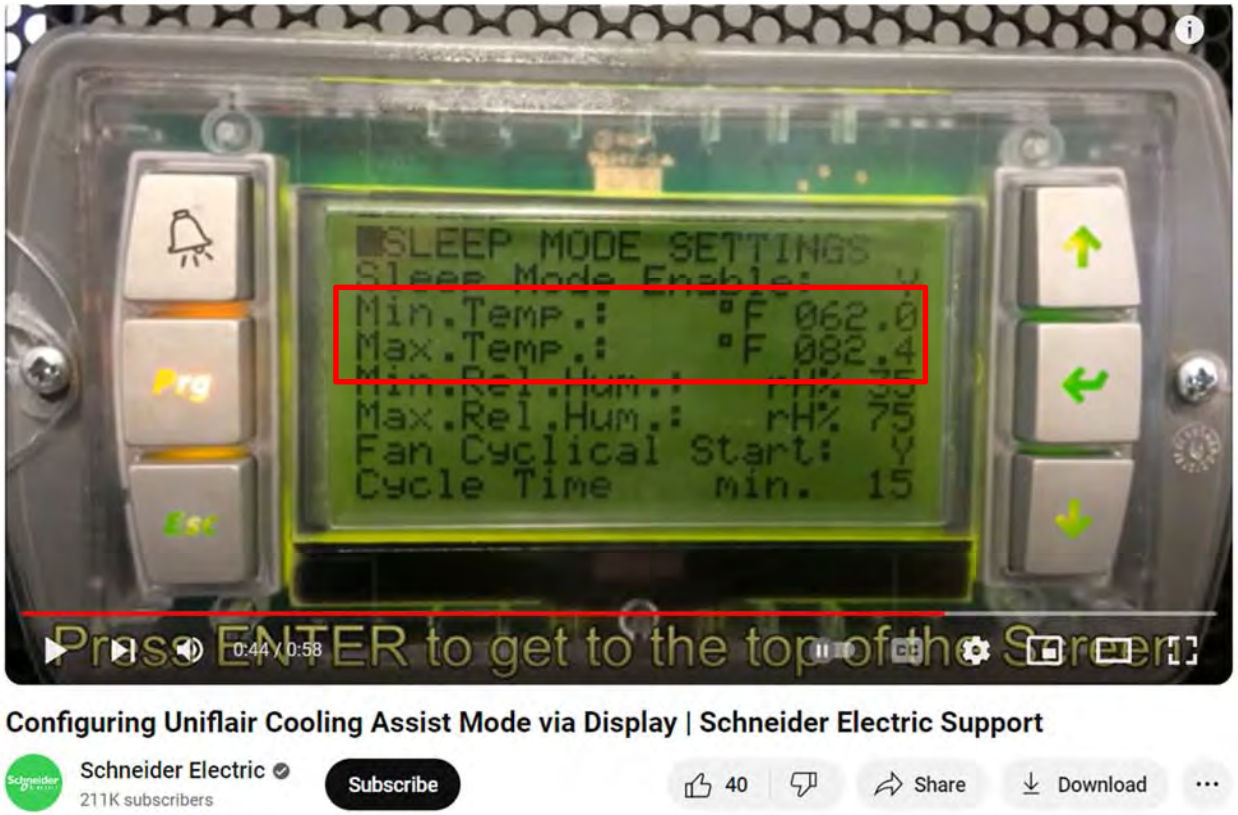 https://www.youtube.com/watch?v=5Z-J9xj-anI, at 0:44.

	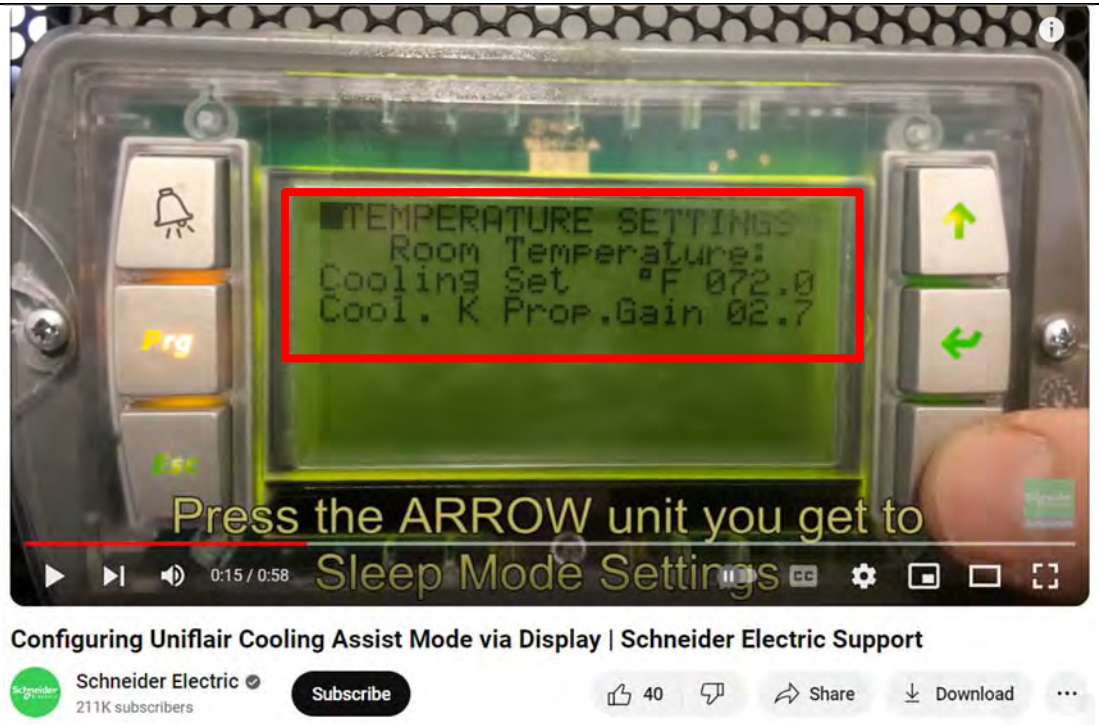 https://www.youtube.com/watch?v=5Z-J9xj-anI, at 0:15.
[10e] varying said removal of said cooling fluid from said racks in response to said sensed temperatures being outside said predetermined temperature range; and	Databank uses a method for varying removal of cooling fluid from racks in response to sensed temperatures being outside predetermined temperature range. In the Uniflair cooling system used by DataBank, the air removal unit removes the cooling fluid if the predetermined temperature range isn't met.

	 Configuring Uniflair Cooling Assist Mode via Display | Schneider Electric Support Schneider Electric 211K subscribers Subscribe 40 Share Download https://www.youtube.com/watch?v=5Z-J9xj-anI, , at 0:44. The Air Removal Unit captures exhaust heat, ducting it to the return air plenum and eliminating hot spots. Through automatic fan speed adjustment based on temperature or power consumption, a desired temperature can be set and fans will self-adjust for optimal energy efficiency. https://www.se.com/in/en/product-range/62437-rack-air-removal-unit-vx/#overview
[10f] varying the supply of cooling fluid in response to varying said removal of said cooling fluid.	DataBank varies the supply of cooling fluid in response to varying removal of cooling fluid. For example, Uniflair cooling systems have the feature of varying the output of cooling fluid according to the change in the temperature.

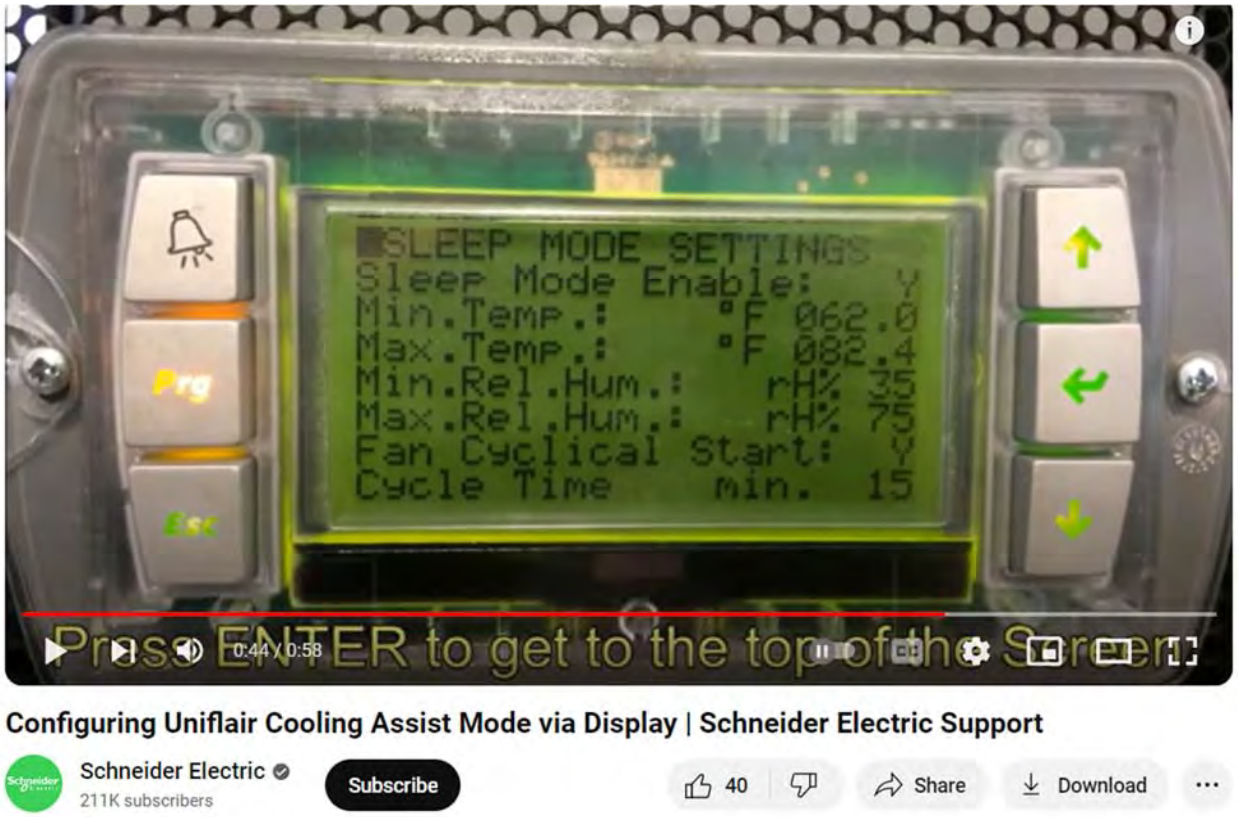

https://www.youtube.com/watch?v=5Z-J9xj-anI, at 0:44.

UNIFLAIR™

The solution is particularly applicable for Chilled Water installations where the air flow can be adjusted to a very low minimum level (20% on cooling only units). AFPS can also be used on installations for DX systems (air or water cooled) which include multiple Uniflair units.

AFPS also includes the following additional features;

- Adjustable constant under-floor pressurisation from each unit
- Control to the average pressure as measured by any group of Uniflair units connected in LAN.
- Revert to independent control should any Uniflair unit measure excessive ΔP.
- Each Uniflair unit operates at maximum speed should its microprocessor fail (all others in LAN will reduce speed automatically).
- Each Uniflair unit will operate at maximum speed should any sensor be damaged (all others in LAN will reduce speed automatically).
- Revert to independent control should the LAN fail.
- Up to 10 units on one LAN

http://www.uniflair.co.uk/pdfs/AFPS.pdf

Exhibit 12

U.S. Patent No. 6,854,287 – Infringement Claim Chart

Claim 1	Exemplary Evidence of Infringement by DataBank
[1pre] A method for cooling a room configured to house a plurality of computer systems, said method comprising:	DataBank's data centers use a method for cooling a room configured to house a plurality of computer systems. For example, DataBank uses Vertiv (Liebert) cooling units in each colocation data center. Liebert cooling units are controlled by Liebert's iCOM Intelligent Communication and Monitoring system. https://www.youtube.com/watch?v=YJbtLEFI6t0, at 4:31.

Claim 1	Exemplary Evidence of Infringement by DataBank
	 https://www.youtube.com/watch?v=YJbtLEFI6t0, at 4:41. DataBank also acquired Zayo's data centers in 2020. https://www.databank.com/resources/press-releases/databank-closes-acquisition-of-zcolo-us-and-uk-data-center-assets/ Zayo also uses Vertiv and Liebert CRAC units in their data centers, which are controlled by Liebert's iCOM system.

Claim 1	Exemplary Evidence of Infringement by DataBank
	Zayo – Mt. Prospect Data Center Zayo's Chicago data center is located at 800 E Business Center Dr., Mount Prospect, IL 60056. The facility is standalone building located in 5.4 acres of land having data center space, conference rooms, enclosed & secured loading docks and drive-in door, and 166 parking spaces. The data center is ideally situated, close to O'Hare international airport, and is approximately 25 miles from downtown Chicago. The facility is located outside the flood plain, and outside all flight paths of Chicago airport. https://cloudandcolocation.com/datacenters/zayo-mt-prospect-data-center/ Mt. Prospect data center is a 2N redundant power infrastructure facility. The data center has 16,000 kW of utility power, and provides 200 watts per square feet of usable UPS power density. The immediate power failure is protected by 10,000 kW UPS in 2N configuration, and automatic transfer of load to 16,000 kw diesel generators in N+1 redundancy. The diesel generators have fuel storage for 48 hours runtime at full load with fuel supply refuel. Zayo has standby emergency refueling contracts with local fuel providers, and test generators weekly with non-load exercise to make them up and running. The multiple 30 tons Liebert CRAC units effectively moderate the cooling and humidity in the data center in N+1 configuration. The data center has alarms installed that are attached to building management system (BMS), local police, and fire department. https://cloudandcolocation.com/datacenters/zayo-mt-prospect-data-center/

Claim 1	Exemplary Evidence of Infringement by DataBank
	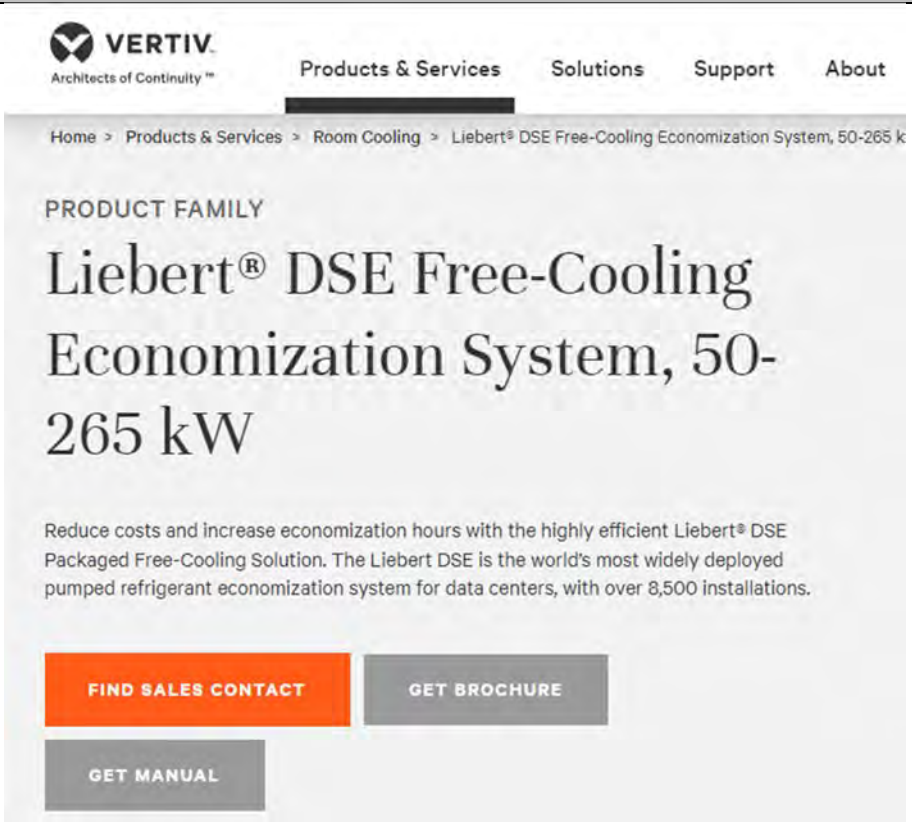 https://www.vertiv.com/en-in/products-catalog/thermal-management/room-cooling/liebert-dse-free-cooling-system-50-165kw/

Claim 1	Exemplary Evidence of Infringement by DataBank
	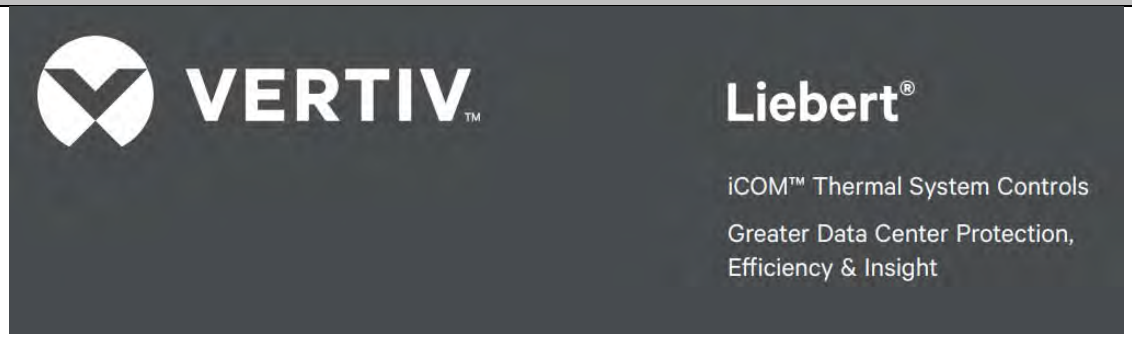 https://www.vertiv.com/49d637/globalassets/shared/liebert-icom-thermal-system-controls-brochure.pdf ("iCOM Brochure").

Claim 1	Exemplary Evidence of Infringement by DataBank
	At the cooling unit level, the Liebert iCOM unit control provides the highest protection available and optimal performance. • Monitors 380 unit and component points to eliminate single points of failure • Self-healing features avoid passing unsafe operating thresholds • Highly intuitive, full-color, touch screen simplifies operations to save time and reduce human error • Multiple, automated unit protection routines, including lead/lag, cascade, rapid restart, refrigerant protection and valve calibration **At the supervisory level,** the Liebert iCOM-S system control offers a revolutionary way to harmonize and optimize thermal system performance to optimize capacity across the data center, gain quick access to actionable data, and automate system diagnostics and trending. • Advanced monitoring and at-a-glance reporting on performance metrics and trends for efficiency, capacity and adverse events • Up to 50% system efficiency gains • 30% lower deployment costs • Teamwork modes that prevent conflict between units and allow them to adapt to changes in facility and IT demand to improve efficiency and availability and reduce system wear and tear – saving more than $10,000 per unit per year in energy costs • Simple and easy to deploy — auto-configuration to detect and configure up to 4,800 sensors, eliminating the need for custom integration to building management systems and cutting sensor deployment times in half Liebert iCOM unit control and Liebert iCOM-S system control are available for new Vertiv™ data center cooling units or as retrofits. iCOM Brochure at p. 3.
[1a] providing a plurality of heat exchanger units configured to receive air from said room and to deliver air to said room;	DataBank provides a plurality of heat exchanger units configured to receive air from said room and to deliver air to said room. For example, DataBank uses Liebert cooling units which are heat exchangers that receive air from the room and deliver cool conditioned air to the room by transferring heat from the air to a fluid.

Claim 1	Exemplary Evidence of Infringement by DataBank
	 https://www.youtube.com/watch?v=YJbtLEFI6t0, at 4:31.

Claim 1	Exemplary Evidence of Infringement by DataBank
	 https://www.youtube.com/watch?v=YJbtLEFI6t0, at 4:41. DataBanks's former Zayo data centers also have Liebert cooling units which are heat exchangers that receive air from the room and deliver cool conditioned air to the room by transferring heat from the air to a fluid.

Claim 1	Exemplary Evidence of Infringement by DataBank
	Zayo – Mt. Prospect Data Center Zayo's Chicago data center is located at 800 E Business Center Dr., Mount Prospect, IL 60056. The facility is standalone building located in 5.4 acres of land having data center space, conference rooms, enclosed & secured loading docks and drive-in door, and 166 parking spaces. The data center is ideally situated, close to O'Hare international airport, and is approximately 25 miles from downtown Chicago. The facility is located outside the flood plain, and outside all flight paths of Chicago airport. https://cloudandcolocation.com/datacenters/zayo-mt-prospect-data-center/ Mt. Prospect data center is a 2N redundant power infrastructure facility. The data center has 16,000 kW of utility power, and provides 200 watts per square feet of usable UPS power density. The immediate power failure is protected by 10,000 kW UPS in 2N configuration, and automatic transfer of load to 16,000 kw diesel generators in N+1 redundancy. The diesel generators have fuel storage for 48 hours runtime at full load with fuel supply refuel. Zayo has standby emergency refueling contracts with local fuel providers, and test generators weekly with non-load exercise to make them up and running. The multiple 30 tons Liebert CRAC units effectively moderate the cooling and humidity in the data center in N+1 configuration. The data center has alarms installed that are attached to building management system (BMS), local police, and fire department. https://cloudandcolocation.com/datacenters/zayo-mt-prospect-data-center/
[1b] supplying said plurality of heat exchanger units with cooling fluid from an air conditioning unit;	DataBank supplies said plurality of heat exchanger units with cooling fluid from an air conditioning unit. For example, DataBank uses Liebert's cooling units which have an evaporator. Refrigerant cooling fluid flows through heat exchanger coils in evaporator.

Claim 1	Exemplary Evidence of Infringement by DataBank
	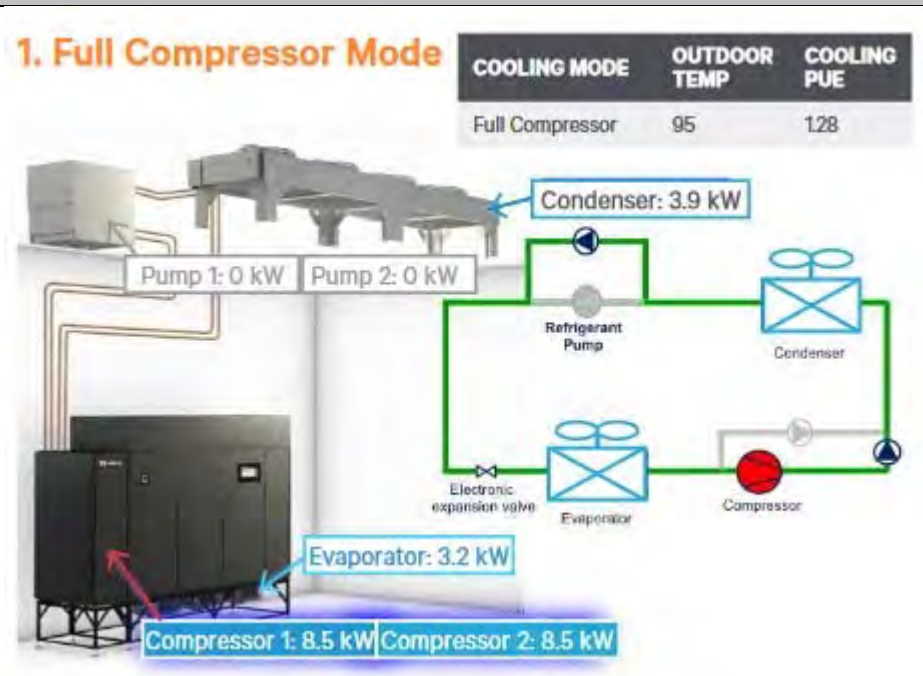 https://www.vertiv.com/49f1fd/globalassets/products/thermal-management/room-cooling/liebert-dse-sales-brochure-sl-18927_00.pdf DataBank uses Liebert cooling units which have a chilled water control valve. Chilled water cooling fluid flows through heat exchanger coils in evaporator.

chilled water
COM
l controls to
erature and
the cooling
and built for
ee operation.

cities

g capacities,

ns.

Chilled Water Control Valve

The chilled water valve provides proportional control action in response to room temperature and humidity as sensed by the microprocessor control. It includes operating linkage and electronic motor. Unlike other systems of this nature it requires no over-travel linkage or end switches to be adjusted. The control uses "intelligent logic" to eliminate valve hunting, thus greatly increasing the life of the valve. The valve can be a 3-way or 2-way to meet the appropriate requirements of the installed system.

Claim 1	Exemplary Evidence of Infringement by DataBank
	https://www.vertiv.com/491dda/globalassets/products/thermal-management/room-cooling/liebert-cw-brochure.pdf.
[1c] cooling said received air through heat exchange with the cooling fluid in the plurality of heat exchanger units;	DataBank cools said received air through heat exchange with the cooling fluid in the plurality of heat exchanger units. For example, DataBank uses Liebert cooling units to cool fluid (refrigerant) through the coil. The cooling fluid through the coil is chilled water/glycol. Liebert cooling units receive the "return air" from the room and deliver cool conditioned "supply air" to the room, by transferring heat from the air to the cooling fluid within the coil. 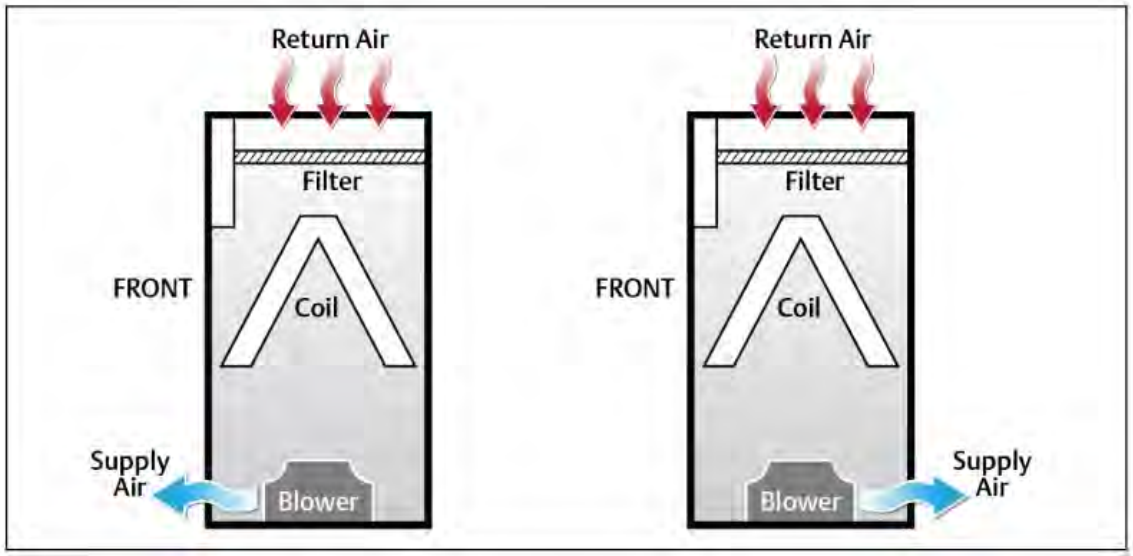 https://www.vertiv.com/4afe7d/globalassets/products/thermal-management/room-cooling/liebert-dse-80-165kw-23-43-tons-downflow-system-design-manual.pdf, pp. 3. 6.

Claim 1	Exemplary Evidence of Infringement by DataBank
[1d] sensing temperatures at one or more locations in said room;	DataBank senses temperatures at one or more locations in said room. For example, DataBank uses Liebert cooling units and the Liebert cooling unit control system senses temperatures at the supply sensor, remote sensor, or return sensor locations. **3.1.12 Automatic Fan Speed Control** Temperature sensors can control fan speed using one of three modes based on the type of sensor selected as the fan-control sensor: supply, return, or remote, see **Table 3.2** below. Control is based on the selected sensor for both fan control and temperature control and their setpoints as follows: • Coupled: The fan control and temperature control sensor selection is the same. When coupled, fan speed is determined by the temperature setpoints. • Decoupled: The fan control and temperature control sensor selection is different. When decoupled, fan speed is determined by the fan setpoints. **Table 3.2 Fan Speed Controlling Sensor Options** Temperature Control Sensor Selected: Supply Sensor / Remote Sensor / Return Sensor Fan Control Sensor Selected: Supply Sensor — Coupled / N/A / N/A Fan Control Sensor Selected: Remote Sensor — Decoupled (Recommended) / Coupled / N/A Fan Control Sensor Selected: Return Sensor — Decoupled / Decoupled / Coupled https://www.vertiv.com/49b8b2/globalassets/shared/liebert-icom-user-manual_sl-31075.pdf, p. 45.
[1e] controlling at least one of the temperature of said cooling fluid and said air delivery by said plurality of heat exchanger units to said room in response	DataBank controls at least one of the temperature of said cooling fluid and said air delivery by said plurality of heat exchanger units to said room in response to said sensed temperatures at said one or more locations.

Claim 1	Exemplary Evidence of Infringement by DataBank
to said sensed temperatures at said one or more locations; and	For example, DataBank uses Liebert cooling units which have temperate sensors that control fan speed in response to sensed temperatures. **3.1.12 Automatic Fan Speed Control** Temperature sensors can control fan speed using one of three modes based on the type of sensor selected as the fan-control sensor: supply, return, or remote, see **Table 3.2** below . Control is based on the selected sensor for both fan control and temperature control and their setpoints as follows: • Coupled: The fan control and temperature control sensor selection is the same. When coupled, fan speed is determined by the temperature setpoints. • Decoupled: The fan control and temperature control sensor selection is different. When decoupled, fan speed is determined by the fan setpoints. **Table 3.2 Fan Speed Controlling Sensor Options** [table below] https://www.vertiv.com/49b8b2/globalassets/shared/liebert-icom-user-manual_sl-31075.pdf, p. 45. The Liebert cooling unit controls activates the flow of chilled water/glycol, and varies cooling capacity by adjusting a motorized ball valve. **7.1.4 Temperature Control with a Fluid Economizer** When an economizer is installed, the cooling requirement (determined by the temperature proportional band) is addressed first by the economizer's secondary cooling, if the economizer cooling capacity is insufficient, the compressor(s) begin cooling to bring the room air temperature down to the temperature setpoint. The fluid economizer employs a motorized ball valve that controls the flow of chilled water/glycol to provide a cooling capacity from 0% to 100%.

		Temperature Control Sensor Selected		
		Supply Sensor	Remote Sensor	Return Sensor
Fan Control Sensor Selected	Supply Sensor	Coupled	N/A	N/A
	Remote Sensor	Decoupled (Recommended)	Coupled	N/A
	Return Sensor	Decoupled	Decoupled	Coupled

Claim 1	Exemplary Evidence of Infringement by DataBank
	https://www.vertiv.com/49b8b2/globalassets/shared/liebert-icom-user-manual_sl-31075.pdf, p. 110.
[1f] wherein the step of controlling said air delivery by said plurality of heat exchanger units comprises individually manipulating a mass flow rate of the cooling fluid supplied to each of the plurality of heat exchanger units.	DataBank controls said air delivery by said plurality of heat exchanger units comprises individually manipulating a mass flow rate of the cooling fluid supplied to each of the plurality of heat exchanger units. For example, Liebert cooling units have a motorized ball valve to control flow of chilled water/glycol to each of the plurality of the heat exchange units. **7.1.4 Temperature Control with a Fluid Economizer** When an economizer is installed, the cooling requirement (determined by the temperature proportional band) is addressed first by the economizer's secondary cooling, if the economizer cooling capacity is insufficient, the compressor(s) begin cooling to bring the room air temperature down to the temperature setpoint. The fluid economizer employs a motorized ball valve that controls the flow of chilled water/glycol to provide a cooling capacity from 0% to 100%. **Simultaneous Operation, Partial Economizer Operation, and Staging Cooling Sources** When simultaneous operation of the compressor(s) and secondary cooling is enabled, the portion of the proportional band assigned to the fluid capacity valve may be reduced by the comparator circuit based on the DT settings. When this occurs, the compressor control proportional band moves closer to the setpoint, and compressorized cooling begins before secondary cooling reaches 100% (as shown in the example Secondary Cooling Temperature Control with Two Step Compressor on the facing page) or shuts off. https://www.vertiv.com/49b8b2/globalassets/shared/liebert-icom-user-manual_sl-31075.pdf, p. 118.

Claim 1	Exemplary Evidence of Infringement by DataBank
	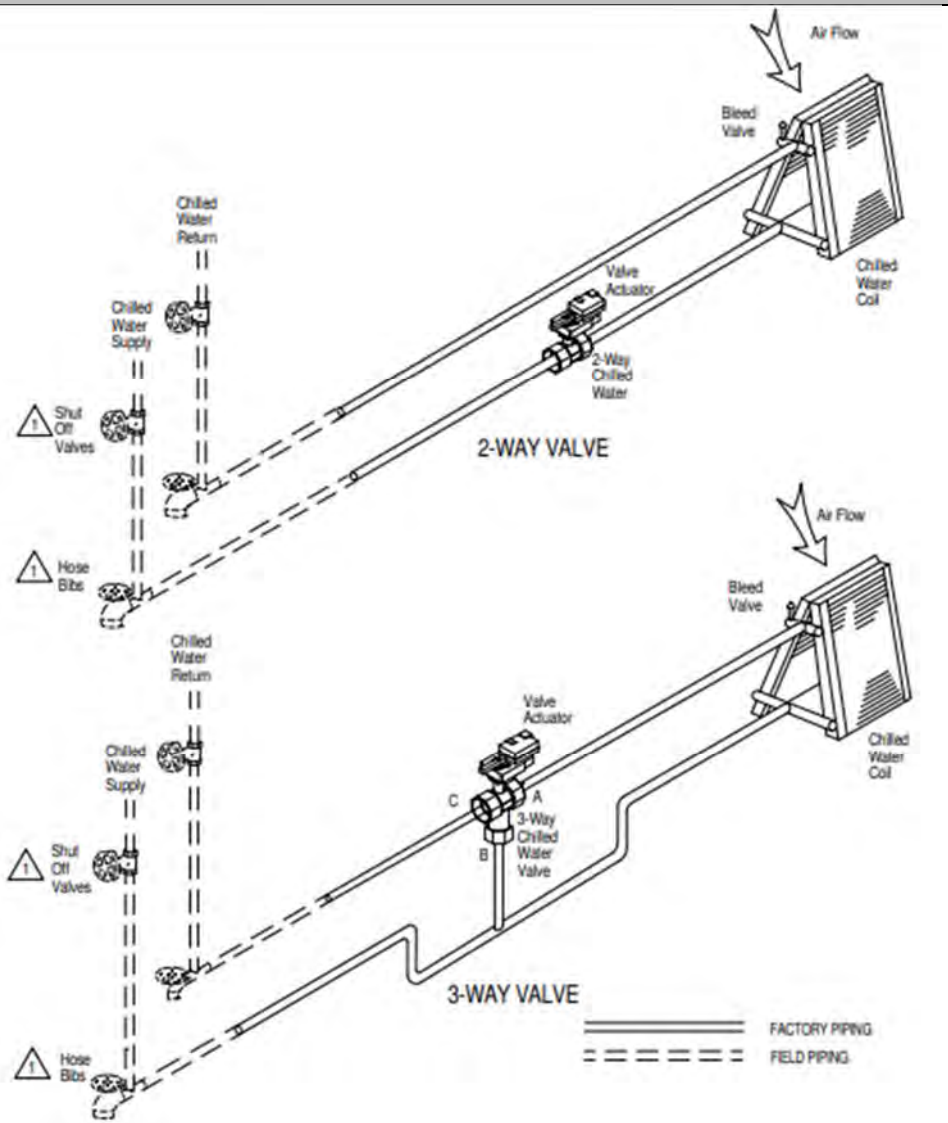 https://www.vertiv.com/4ae381/globalassets/products/thermal-management/room-

Claim 1	Exemplary Evidence of Infringement by DataBank
	cooling/liebert-cw-26-400kw-upflow-and-downflow-50-60hz-user-manual_00.pdf, p. 135. For example, DataBank uses Liebert cooling units which have Teamwork mode. Teamwork mode evaluates changes in the air temperature of the inlet, outlet, or supply temperature of the heat dissipating devices and adjusts one or more cooling unit controls to provide the required cooling capacity. **6 Teamwork, Standby and Rotation for Cooling Units** U2U communication via private network and additional hardware (see U2U Networking on page 95) allows the following operating features for the cooling units: • Teamwork • Standby (Rotation) • Cascade https://www.vertiv.com/49b8b2/globalassets/shared/liebert-icom-user-manual_sl-31075.pdf, p. 101.

Claim 1	Exemplary Evidence of Infringement by DataBank
	MULTI-UNIT COORDINATION Vertiv™ Liebert® iCOM™ teamwork shall save energy by preventing multiple units in an area from operating in opposing modes. Teamwork shall allow the control to optimize a group of connected cooling units equipped with Liebert® iCOM™ using the U2U (Unit to Unit) network. There shall be three modes of teamwork operation: • **Teamwork Mode 1 (Parallel)**: Is best in small rooms with balanced heat loads. The controlling temperature and humidity sensor readings of all units in operation (fan on) are collected to be used for an average or worst-case sensor reading (user selectable). The master unit shall send the operating requirements to all operating units in the group. The control band (temperature, fan and humidity) is divided and shared among the units in the group. Each unit will receive instructions on how to operate from the Master unit based on how far the system deviates from the setpoints. Evaporator fans and cooling capacity are ramped in parallel. • **Teamwork Mode 2 (Independent)**: Is best applied in large rooms with unbalanced heat loads. The Liebert® iCOM™ calculates the worse-case demand for heating, cooling humidification and dehumidification. Based on the greatest demand within the group, each unit operates independently, meaning that the unit may respond to the thermal load and humidity conditions based on the unit's controlling sensors. All sensor readings are shared. • **Teamwork Mode 3 (Optimized Aisle)**: May be employed in large and small rooms with varying heat loads. Optimized Aisle is the most efficient teamwork mode that allows the unit to match cooling capacity with heat load. In the Optimized Aisle mode, the fans operate in parallel. Fans can be controlled exclusively by remote temperature or using static pressure with a secondary remote temperature sensor(s) as an override to ensure the inlet rack temperature is being met. Cooling (Chilled Water Valve or Economizer) is controlled through unit supply air conditions. The Liebert® iCOM™ calculates the average or worst-case sensor reading (user-selectable) for heating, cooling humidification and dehumidification. Based on the demand within the group, units will be allowed to operate within that mode until room conditions are satisfied. This is the best form of control for a room with an unbalanced load. https://www.vertiv.com/4ab84c/globalassets/products/thermal-management/room-cooling/liebert-cw-control-system-guide-specifications.pdf, p. 9. The Liebert cooling units also have standby mode. Standby mode evaluates changes in the air temperature of the inlet, outlet, or supply temperature of the heat dissipating

Claim 1	Exemplary Evidence of Infringement by DataBank
	devices and actives/de-actives one or more cooling units to provide the required cooling capacity. **Standby Lead-Lag** The Liebert® iCOM™ shall allow planned rotation to keep equal run time on units and provide automated emergency rotation of operating and standby units. **Standby Unit Cascading** The Liebert® iCOM™ cascade option shall allow the units to turn On and Off based on heat load when utilizing Teamwork Mode 1, Independent mode or Teamwork Mode 3, Optimized Aisle mode with remote temperature sensors. In Teamwork Mode 1, Cascade mode will stage units on based on the temperature and humidity readings and their deviation from setpoint. In Teamwork 3 Mode, Cascade mode dynamically coordinates the fan speed to save energy and to meet the cooling demands. For instance, with a Liebert® iCOM™ group of six units and only 50% of the heat load, the Liebert® iCOM™ shall operate only four units at 80% fan speed and leave the other two units in standby. As the heat load increases, the Liebert® iCOM™ shall automatically respond to the new load and bring on another unit, increasing the units in operation to five. As the heat load shifts up or down, the control shall meet the need by cascading units On or putting them into standby. https://www.vertiv.com/4ab84c/globalassets/products/thermal-management/room-cooling/liebert-cw-control-system-guide-specifications.pdf, p. 9.

Exhibit 13

U.S. Patent No. 6,862,179 – Infringement Claim Chart

Claim 1	Exemplary Evidence of Infringement by DataBank
[1pre] A method of cooling a plurality of racks in a data center, said method comprising:	DataBank's data centers use a method of cooling a plurality of racks in a data center. For example, DataBank uses Vertiv (Liebert) cooling units in the colocation data center. Liebert cooling units are controlled by Liebert's iCOM Intelligent Communication and Monitoring system. https://www.youtube.com/watch?v=YJbtLEFI6t0, at 4:31.

	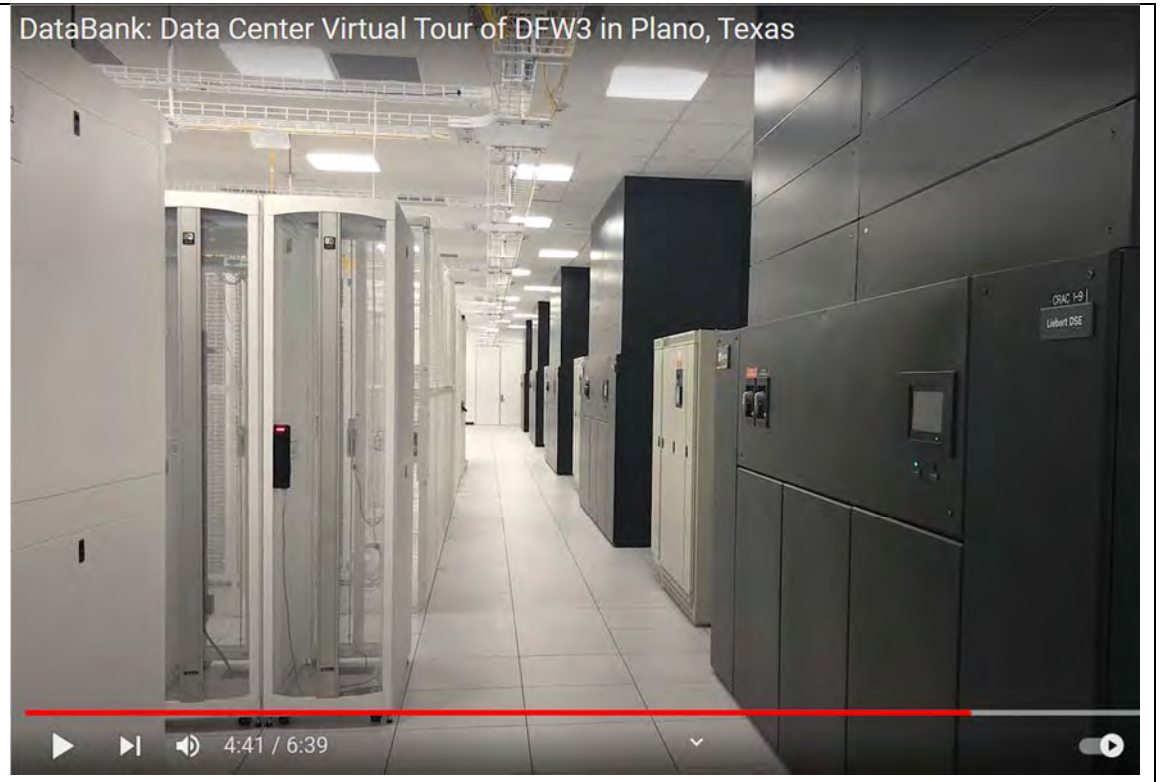 https://www.youtube.com/watch?v=YJbtLEFI6t0, at 4:41. DataBank also acquired Zayo's data centers in 2020. https://www.databank.com/resources/press-releases/databank-closes-acquisition-of-zcolo-us-and-uk-data-center-assets/ Zayo also uses Vertiv and Liebert CRAC units in their data centers, which are controlled by Liebert's iCOM system.

	Zayo – Mt. Prospect Data Center Zayo's Chicago data center is located at 800 E Business Center Dr., Mount Prospect, IL 60056. The facility is standalone building located in 5.4 acres of land having data center space, conference rooms, enclosed & secured loading docks and drive-in door, and 166 parking spaces. The data center is ideally situated, close to O'Hare international airport, and is approximately 25 miles from downtown Chicago. The facility is located outside the flood plain, and outside all flight paths of Chicago airport. https://cloudandcolocation.com/datacenters/zayo-mt-prospect-data-center/ Mt. Prospect data center is a 2N redundant power infrastructure facility. The data center has 16,000 kW of utility power, and provides 200 watts per square feet of usable UPS power density. The immediate power failure is protected by 10,000 kW UPS in 2N configuration, and automatic transfer of load to 16,000 kw diesel generators in N+1 redundancy. The diesel generators have fuel storage for 48 hours runtime at full load with fuel supply refuel. Zayo has standby emergency refueling contracts with local fuel providers, and test generators weekly with non-load exercise to make them up and running. The multiple 30 tons Liebert CRAC units effectively moderate the cooling and humidity in the data center in N+1 configuration. The data center has alarms installed that are attached to building management system (BMS), local police, and fire department. https://cloudandcolocation.com/datacenters/zayo-mt-prospect-data-center/

	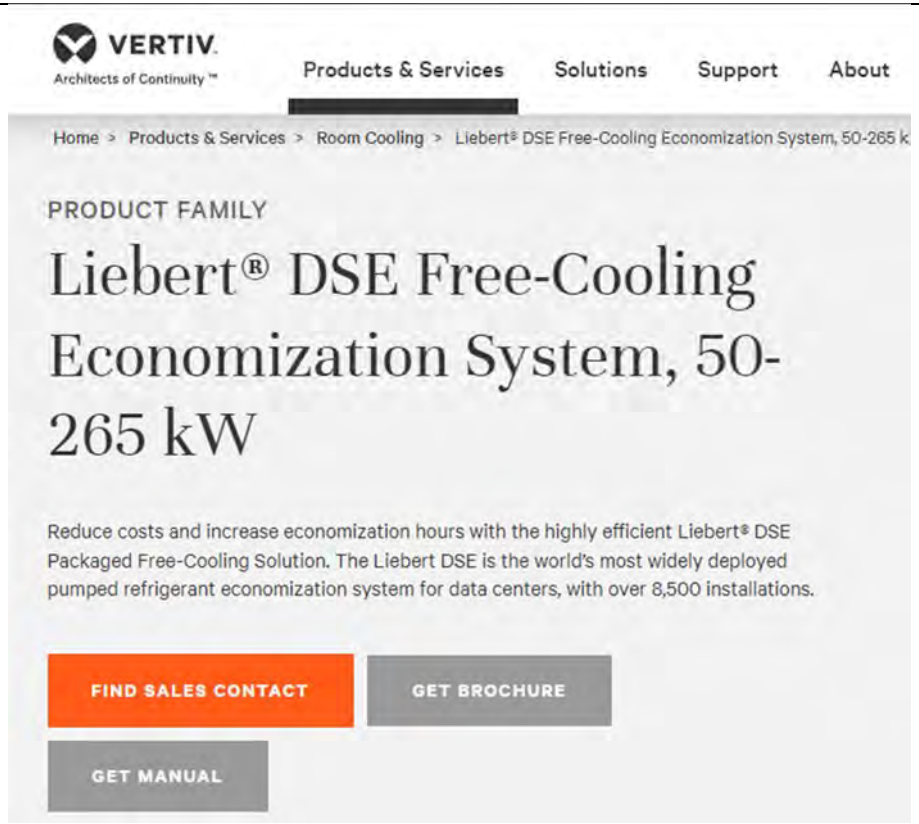 https://www.vertiv.com/en-in/products-catalog/thermal-management/room-cooling/liebert-dse-free-cooling-system-50-165kw/

	 https://www.vertiv.com/49d637/globalassets/shared/liebert-icom-thermal-system-controls-brochure.pdf ("iCOM Brochure").

	At the cooling unit level, the Liebert iCOM unit control provides the highest protection available and optimal performance. • Monitors 380 unit and component points to eliminate single points of failure • Self-healing features avoid passing unsafe operating thresholds • Highly intuitive, full-color, touch screen simplifies operations to save time and reduce human error • Multiple, automated unit protection routines, including lead/lag, cascade, rapid restart, refrigerant protection and valve calibration **At the supervisory level,** the Liebert iCOM-S system control offers a revolutionary way to harmonize and optimize thermal system performance to optimize capacity across the data center, gain quick access to actionable data, and automate system diagnostics and trending. • Advanced monitoring and at-a-glance reporting on performance metrics and trends for efficiency, capacity and adverse events • Up to 50% system efficiency gains • 30% lower deployment costs • Teamwork modes that prevent conflict between units and allow them to adapt to changes in facility and IT demand to improve efficiency and availability and reduce system wear and tear – saving more than $10,000 per unit per year in energy costs • Simple and easy to deploy — auto-configuration to detect and configure up to 4,800 sensors, eliminating the need for custom integration to building management systems and cutting sensor deployment times in half Liebert iCOM unit control and Liebert iCOM-S system control are available for new Vertiv™ data center cooling units or as retrofits. iCOM Brochure at p. 3.
[1a] activating a cooling device and opening a controllable partition configured to vary a supply of cooling fluid within a zone of said data center, said zone including at least one associated rack of said plurality of racks;	DataBank activates a cooling device and opening a controllable partition configured to vary a supply of cooling fluid within a zone of said data center, said zone including at least one associated rack of said plurality of racks. For example, Liebert's iCOM Intelligent Communication and Monitoring fluid economizer system activates the flow of chilled water/glycol, and varies cooling capacity by adjusting a motorized ball valve (controllable partition).

	7.1.4 Temperature Control with a Fluid Economizer When an economizer is installed, the cooling requirement (determined by the temperature proportional band) is addressed first by the economizer's secondary cooling, if the economizer cooling capacity is insufficient, the compressor(s) begin cooling to bring the room air temperature down to the temperature setpoint. The fluid economizer employs a motorized ball valve that controls the flow of chilled water/glycol to provide a cooling capacity from 0% to 100%. https://www.vertiv.com/49b8b2/globalassets/shared/liebert-icom-user-manual_sl-31075.pdf, p. 110.
[1b] sensing the temperature of said at least one associated rack;	DataBank senses the temperature of said at least one associated rack. For example, DataBank uses Liebert cooling units and the Liebert cooling unit control system senses temperatures. **13.2 Installing Wired Remote Sensors** Up to 10 remote sensor modules, installed in the monitored racks and connected to the cooling unit, provide control and reference input to iCOM and building-management systems. Using remote, rack sensors combats cooling problems related to recirculation air, uneven rack loading, and air distribution. https://www.vertiv.com/49b8b2/globalassets/shared/liebert-icom-user-manual_sl-31075.pdf, p. 180.
[1c] determining whether said sensed temperature is within a predetermined temperature range; and	DataBank determines whether said sensed temperature is within a predetermined temperature range. For example, DataBank uses the Liebert iCOM system which is able to identify if the temperature is at the setpoint value, and change the response to the varied flow field based on length of time temperature has deviated, and amount of deviation from setpoint.

	Temperature Integration Time Adjusts amount of cooling/heating based on the length of time the temperature has deviated from the setpoint. The time selected is the amount of time it will take cooling capacity to reach 100%. For example, if three minutes is selected, cooling capacity will increase to 100% in three minutes. NOTE: Three to five minutes of integration time is adequate for most applications. See Considerations when Using PI Temperature Control on page 28 . NOTE: Only used when Temperature Control Type is PI. **Temperature Proportional Band** Adjusts the activation point of cooling/heating components based on deviation from setpoint by placing half of the selected value on each side of the temperature control setpoint. A smaller number causes faster reaction to temperature changes. NOTE: Setting this too low causes short cycling of compressors. https://www.vertiv.com/49b8b2/globalassets/shared/liebert-icom-user-manual_sl-31075.pdf, p. 25.
[1d] manipulating said controllable partition to vary said supply of said cooling fluid to said zone in response to said sensed temperature being outside said predetermined temperature range.	DataBank manipulates said controllable partition to vary said supply of said cooling fluid to said zone in response to said sensed temperature being outside said predetermined temperature range. DataBank uses Liebert's iCOM system to manipulate the motorized ball valve (controllable partition) from 0% to 100% flow of chilled water/glycol. **7.1.4 Temperature Control with a Fluid Economizer** When an economizer is installed, the cooling requirement (determined by the temperature proportional band) is addressed first by the economizer's secondary cooling, if the economizer cooling capacity is insufficient, the compressor(s) begin cooling to bring the room air temperature down to the temperature setpoint. The fluid economizer employs a motorized ball valve that controls the flow of chilled water/glycol to provide a cooling capacity from 0% to 100%. https://www.vertiv.com/49b8b2/globalassets/shared/liebert-icom-user-manual_sl-31075.pdf, p. 110.

	Figure 3.17 Second Cooling Source and Two-Step Compressorized Cooling 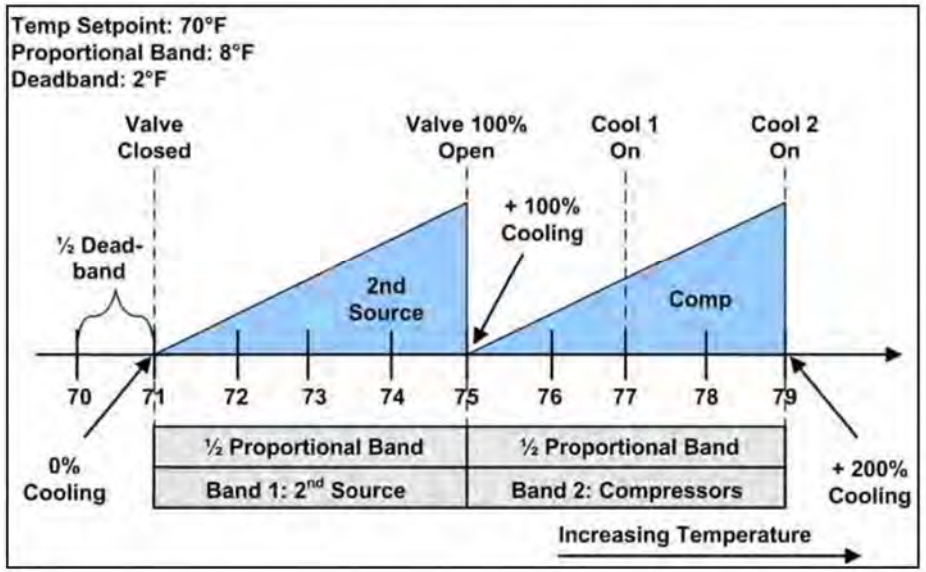 https://www.vertiv.com/49b8b2/globalassets/shared/liebert-icom-user-manual_sl-31075.pdf, p. 69, Fig. 3.17.

	Figure 3.18 Freecooling and Compressorized Operation 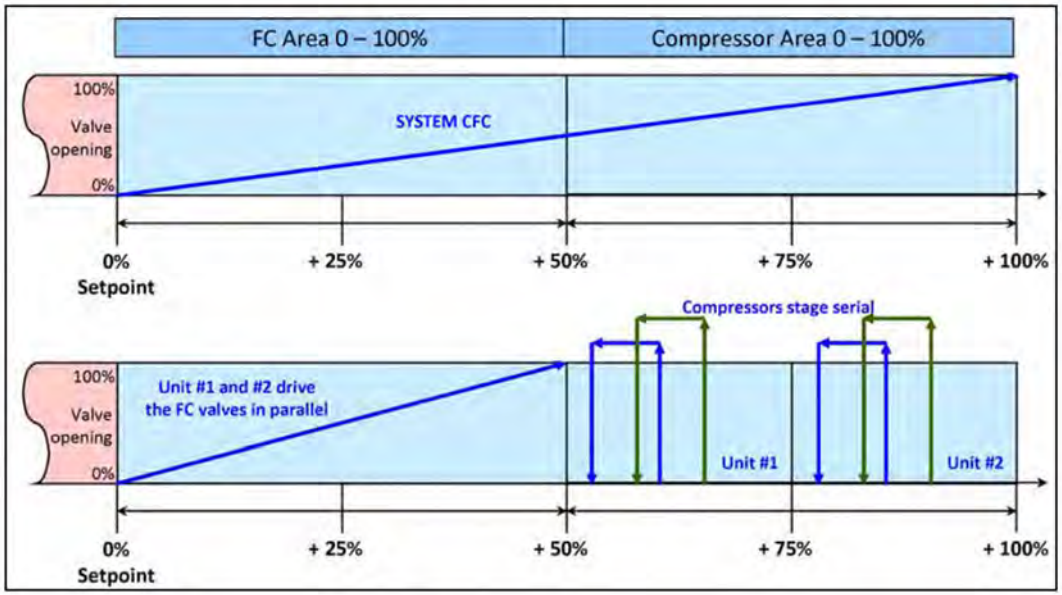 https://www.vertiv.com/49b8b2/globalassets/shared/liebert-icom-user-manual_sl-31075.pdf, p. 70, Fig. 3.18.

Exhibit 14

U.S. Patent No. 7,031,870 – Infringement Claim Chart

Claim 1	Exemplary Evidence of Infringement by DataBank
[1pre] A method for evaluating one or more components in a data center, the method comprising:	DataBank's data centers use a method for evaluating one or more components in a data center. For example, DataBank uses Vertiv and Liebert cooling in its U.S. data centers to control atmospheric conditions. Liebert's cooling units are controlled, for example, by Liebert's iCOM and/or iCOM-S Intelligent Communication and Monitoring System, which uses a method for evaluating one or more components in a data center. https://www.youtube.com/watch?v=YJbtLEFI6t0, at 4:31.

Claim 1	Exemplary Evidence of Infringement by DataBank
	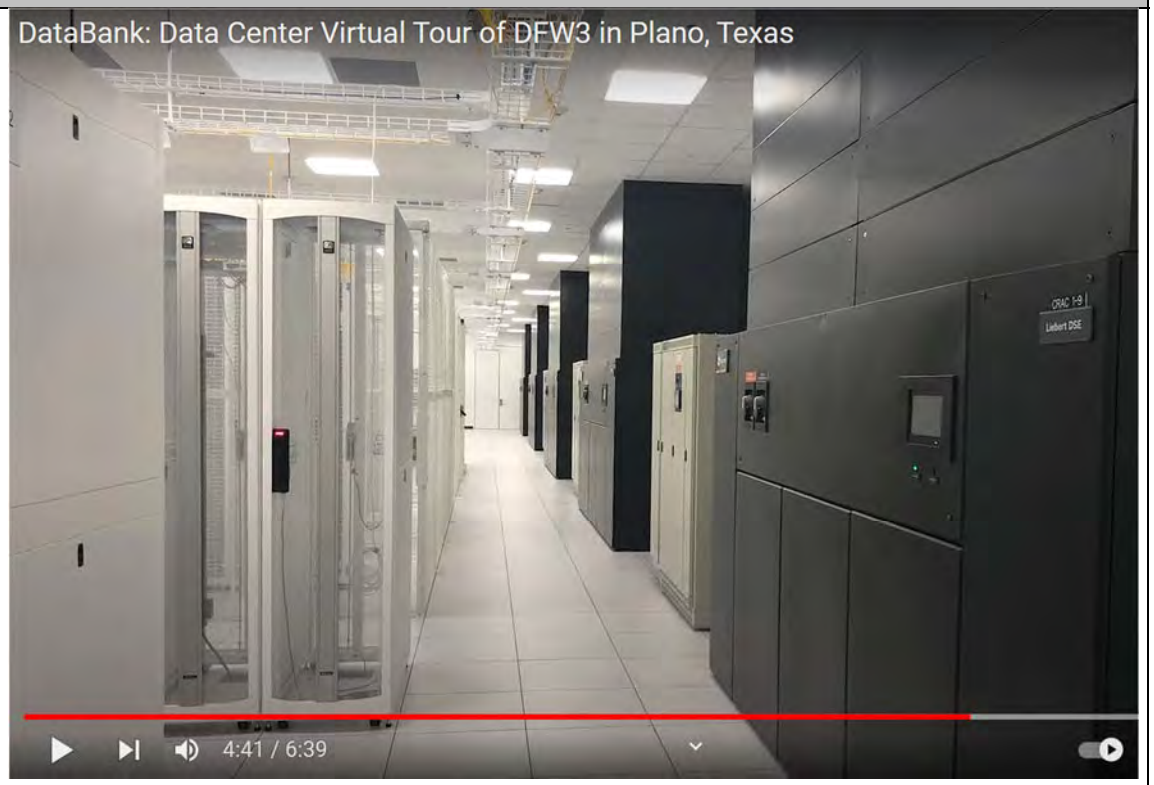 https://www.youtube.com/watch?v=YJbtLEFI6t0, at 4:41. DataBank also acquired Zayo's data centers in 2020. https://www.databank.com/resources/press-releases/databank-closes-acquisition-of-zcolo-us-and-uk-data-center-assets/ Zayo also uses Vertiv and Liebert CRAC units in their data centers, which are controlled by Liebert's iCOM system.

Claim 1	Exemplary Evidence of Infringement by DataBank
	Zayo – Mt. Prospect Data Center Zayo's Chicago data center is located at 800 E Business Center Dr., Mount Prospect, IL 60056. The facility is standalone building located in 5.4 acres of land having data center space, conference rooms, enclosed & secured loading docks and drive-in door, and 166 parking spaces. The data center is ideally situated, close to O'Hare international airport, and is approximately 25 miles from downtown Chicago. The facility is located outside the flood plain, and outside all flight paths of Chicago airport. https://cloudandcolocation.com/datacenters/zayo-mt-prospect-data-center/ Mt. Prospect data center is a 2N redundant power infrastructure facility. The data center has 16,000 kW of utility power, and provides 200 watts per square feet of usable UPS power density. The immediate power failure is protected by 10,000 kW UPS in 2N configuration, and automatic transfer of load to 16,000 kw diesel generators in N+1 redundancy. The diesel generators have fuel storage for 48 hours runtime at full load with fuel supply refuel. Zayo has standby emergency refueling contracts with local fuel providers, and test generators weekly with non-load exercise to make them up and running. The multiple 30 tons Liebert CRAC units effectively moderate the cooling and humidity in the data center in N+1 configuration. The data center has alarms installed that are attached to building management system (BMS), local police, and fire department. https://cloudandcolocation.com/datacenters/zayo-mt-prospect-data-center/

Claim 1	Exemplary Evidence of Infringement by DataBank
	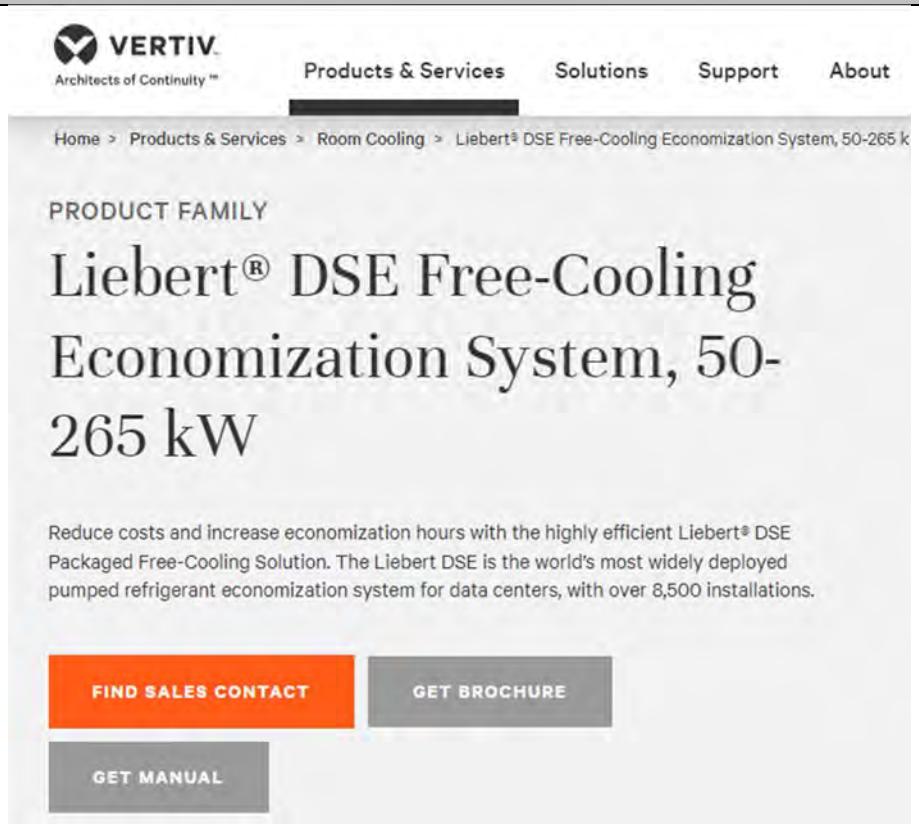 https://www.vertiv.com/en-in/products-catalog/thermal-management/room-cooling/liebert-dse-free-cooling-system-50-165kw/

Claim 1	Exemplary Evidence of Infringement by DataBank
	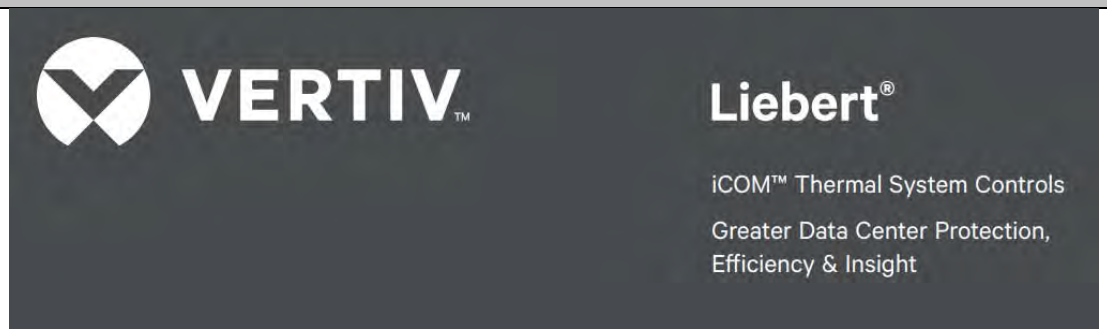 https://www.vertiv.com/49d637/globalassets/shared/liebert-icom-thermal-system-controls-brochure.pdf ("iCOM Brochure").

Claim 1	Exemplary Evidence of Infringement by DataBank
	At the cooling unit level, the Liebert iCOM unit control provides the highest protection available and optimal performance. • Monitors 380 unit and component points to eliminate single points of failure • Self-healing features avoid passing unsafe operating thresholds • Highly intuitive, full-color, touch screen simplifies operations to save time and reduce human error • Multiple, automated unit protection routines, including lead/lag, cascade, rapid restart, refrigerant protection and valve calibration **At the supervisory level,** the Liebert iCOM-S system control offers a revolutionary way to harmonize and optimize thermal system performance to optimize capacity across the data center, gain quick access to actionable data, and automate system diagnostics and trending. • Advanced monitoring and at-a-glance reporting on performance metrics and trends for efficiency, capacity and adverse events • Up to 50% system efficiency gains • 30% lower deployment costs • Teamwork modes that prevent conflict between units and allow them to adapt to changes in facility and IT demand to improve efficiency and availability and reduce system wear and tear – saving more than $10,000 per unit per year in energy costs • Simple and easy to deploy — auto-configuration to detect and configure up to 4,800 sensors, eliminating the need for custom integration to building management systems and cutting sensor deployment times in half Liebert iCOM unit control and Liebert iCOM-S system control are available for new Vertiv™ data center cooling units or as retrofits. iCOM Brochure at p. 3.
[1a] detecting inlet and outlet temperatures of one or more heat dissipating devices;	DataBank detects inlet and outlet temperatures of one or more heat dissipating devices. DataBank uses Liebert iCOM. Liebert iCOM detects inlet and outlet temperatures at server racks using wired, remote rack sensors.

Claim 1	Exemplary Evidence of Infringement by DataBank
	9.4 Wired Remote Sensors Wired, remote, rack sensors can function as control sensors and subsequently, provide input individually at the unit level or at the system level for temperature control and teamwork functions. Each wired remote rack sensor has two thermistors/probes. In Individual Sensor mode, the higher temperature reading or the average temperature reading of the two probes can be used. In Unit Sensors mode, some or all of the rack sensor's temperature readings are considered for higher (maximum) or average calculation. For example, setting three sensors as control and average for unit mode, averages the three highest temperature readings. https://www.vertiv.com/49b8b2/globalassets/shared/liebert-icom-user-manual_sl-31075.pdf ("iCOM Manual") at p. 156. **13.2 Installing Wired Remote Sensors** Up to 10 remote sensor modules, installed in the monitored racks and connected to the cooling unit, provide control and reference input to iCOM and building-management systems. Using remote, rack sensors combats cooling problems related to recirculation air, uneven rack loading, and air distribution. iCOM Manual at p. 180. **13.1 Return Air Temperature/Humidity Sensor** The return temperature/humidity sensor is located in the unit return air section and is supplied on all Liebert®systems with iCOM™ controls. The assembly connects to plug connection P67 on the iCOM internal control board on all CRV systems. iCOM Manual at p. 179.
[1b] detecting temperatures of air supplied by one or more computer room air conditioning (CRAC) units;	DataBank detects temperatures of air supplied by one or more computer room air conditioning (CRAC) units. DataBank uses Liebert iCOM. Liebert iCOM detects temperatures of air supplied by one or more CRAC units.

Claim 1	Exemplary Evidence of Infringement by DataBank
	13.4 Installing Supply Control Sensors **13.4.1 Installing the Supply Air Temperature Sensor** The supply temperature sensor is connected to P8, Pins 1 and 2 at the factory and requires no configuration. 1. Place the sensor in an area that is influenced only by the unit to which it is connected to provide an accurate reading: 5 ft. to 15 ft. (1.5 m to 4.5 m) from the cooling unit, **Figure 13.16** below. iCOM Manual at p. 191.
[1c] calculating indices of air re-circulation for the one or more heat dissipating devices based upon the detected inlet temperatures, outlet temperatures and supplied air temperatures;	DataBank calculates indices of air re-circulation for the one or more heat dissipating devices based upon the detected inlet temperatures, outlet temperatures and supplied air temperatures. DataBank uses Liebert iCOM. Liebert iCOM calculates indices of air recirculation for server racks based on detected inlet, outlet, and supplied air temperatures. **13.2 Installing Wired Remote Sensors** Up to 10 remote sensor modules, installed in the monitored racks and connected to the cooling unit, provide control and reference input to iCOM and building-management systems. Using remote, rack sensors combats cooling problems related to recirculation air, uneven rack loading, and air distribution. iCOM Manual at p. 180. **13.1 Return Air Temperature/Humidity Sensor** The return temperature/humidity sensor is located in the unit return air section and is supplied on all Liebert®systems with iCOM™ controls. The assembly connects to plug connection P67 on the iCOM internal control board on all CRV systems. iCOM Manual at p. 179.

Claim 1	Exemplary Evidence of Infringement by DataBank
	13.4 Installing Supply Control Sensors **13.4.1 Installing the Supply Air Temperature Sensor** The supply temperature sensor is connected to P8, Pins 1 and 2 at the factory and requires no configuration. 1. Place the sensor in an area that is influenced only by the unit to which it is connected to provide an accurate reading: 5 ft. to 15 ft. (1.5 m to 4.5 m) from the cooling unit, **Figure 13.16** below. iCOM Manual at p. 191. **Temperature Control Sensor** Selects sensor that controls cooling. Values are: • Supply Sensor: Temperature control is based on maintaining the temperature of the discharge air from the cooling unit. See Supply Sensors on page 158. • Remote Sensor: Temperature control is based on the temperature reading(s) from wired remote/rack sensor(s). See Wired Remote Sensors on page 156. • Return Sensor: Temperature control is based on maintaining the temperature of the room air. • Customer input setpoint (remote alarm device) iCOM Manual at p. 25.
[1d] varying a flow field setting of air delivered to the one or more heat dissipating devices;	DataBank varies a flow field setting of air delivered to the one or more heat dissipating devices. DataBank uses Liebert iCOM. Liebert iCOM varies the flow field setting of air delivered to server racks by, for example, controlling fan speed.

<table>
<tr><th>Claim 1</th><th>Exemplary Evidence of Infringement by DataBank</th></tr>
<tr><td></td><td>

3.1.12 Automatic Fan Speed Control

Temperature sensors can control fan speed using one of three modes based on the type of sensor selected as the fan-control sensor: supply, return, or remote, see **Table 3.2** below . Control is based on the selected sensor for both fan control and temperature control and their setpoints as follows:

- Coupled: The fan control and temperature control sensor selection is the same. When coupled, fan speed is determined by the temperature setpoints.
- Decoupled: The fan control and temperature control sensor selection is different. When decoupled, fan speed is determined by the fan setpoints.

Table 3.2 Fan Speed Controlling Sensor Options

<table>
<tr><th colspan="2" rowspan="2"></th><th colspan="3">Temperature Control Sensor Selected</th></tr>
<tr><th>Supply Sensor</th><th>Remote Sensor</th><th>Return Sensor</th></tr>
<tr><td rowspan="3">Fan Control Sensor Selected</td><td>Supply Sensor</td><td>Coupled</td><td>N/A</td><td>N/A</td></tr>
<tr><td>Remote Sensor</td><td>Decoupled (Recommended)</td><td>Coupled</td><td>N/A</td></tr>
<tr><td>Return Sensor</td><td>Decoupled</td><td>Decoupled</td><td>Coupled</td></tr>
</table>

iCOM Manual at p. 45.

</td></tr>
<tr><td>[1e] determining whether the indices of air re-circulation has changed in response to the varied flow field settings; and</td><td>DataBank determines whether the indices of air re-circulation has changed in response to the varied flow field settings.

DataBank uses Liebert iCOM. Liebert iCOM determines whether the indices of air re-circulation have changed in response to varied flow field settings, by for example changing the response to varying fan speeds based on the length of time temperature has deviated and the amount of deviation from the setpoint.</td></tr>
</table>

Claim 1	Exemplary Evidence of Infringement by DataBank
	Temperature Integration Time Adjusts amount of cooling/heating based on the length of time the temperature has deviated from the setpoint. The time selected is the amount of time it will take cooling capacity to reach 100%. For example, if three minutes is selected, cooling capacity will increase to 100% in three minutes. NOTE: Three to five minutes of integration time is adequate for most applications. See Considerations when Using PI Temperature Control on page 28 . NOTE: Only used when Temperature Control Type is **PI**. **Temperature Proportional Band** Adjusts the activation point of cooling/heating components based on deviation from setpoint by placing half of the selected value on each side of the temperature control setpoint. A smaller number causes faster reaction to temperature changes. NOTE: Setting this too low causes short cycling of compressors. iCOM Manual at p. 25.
[1f] evaluating the one or more components based upon changes in the indices of air re-circulation for the one or more heat dissipating devices at the various flow field settings.	DataBank evaluates the one or more components based upon changes in the indices of air re-circulation for the one or more heat dissipating devices at the various flow field settings. DataBank uses Liebert iCOM. Liebert iCOM evaluates the components based on changed in the indices of air re-circulation for the server racks at various flow field settings. For example, Teamwork Mode evaluates changes in the air temperature of the inlet, outlet, or supply temperature of the heat dissipating devices and adjusts one or more cooling units controls to provide the required cooling capacity, and Standby Mode evaluates these changes and activates/deactivates one or more cooling units to provide required cooling capacity.

Claim 1	Exemplary Evidence of Infringement by DataBank
	6 Teamwork, Standby and Rotation for Cooling Units U2U communication via private network and additional hardware (see U2U Networking on page 95) allows the following operating features for the cooling units: • Teamwork • Standby (Rotation) • Cascade iCOM Manual at p. 99.

Claim 1	Exemplary Evidence of Infringement by DataBank
	6.2.3 Teamwork Mode 1—Parallel Operation In Teamwork mode 1, fan speed and cooling capacity are ramped up in parallel, which means that all units operate identically. Teamwork mode 1 is best for small rooms with balanced heat loads. A master unit collects the controlling readings for temperature and humidity from all the operating (fan on) units in the group, then determines the average or worst-case reading, and sends operating instructions to efficiently distribute cooling capacity across available units. In Teamwork mode 1, most parameters are shared and, when set in any unit, are set in all units in the group. **6.2.4 Teamwork Mode 2—Independent Operation** Teamwork mode 2 works well for most applications, and best in large rooms with un-balanced heat loads by preventing units in a group from operating in opposing modes, some cooling and some heating. All temperature and humidity parameters are shared by the group. The master unit monitors all available unit-sensor readings and determines the demand for cooling, heating, humidification and dehumidification, then sends operating instructions to address the greatest demand. In Teamwork mode 2, the setpoints for all units must be identical. The proportional band, deadband, and related settings may differ by unit. Fan speed is modulated per unit. Rotation and cascading is not available, so expect uneven distribution of work hours. **6.2.5 Teamwork Mode 3—Optimized Aisle Operation** In Teamwork Mode 3, the fan speed for all units operates in parallel, which means fan speed operation is identical at each unit. However, cooling capacity operates independently for each unit. Teamwork mode 3 takes advantage of variable speed fan options and variable capacity component options to maintain rooms with an unbalanced load and to prevent units in a group from operating in opposing modes. All units operate in the same mode based on the average or worst case (maximum) readings from the unit sensors. A local control (cooling capacity supply sensor) provides input to manage and maintain the discharge-air temperature at each unit. In addition, fan speed and operation are controlled based on readings from the unit temperature or static pressure sensors to control air delivery to the cold aisle. iCOM Manual at p. 102.

Claim 1	Exemplary Evidence of Infringement by DataBank
	6.3 Assigning Cooling Units to Standby (Lead/Lag) Standby assigns some units to operate while others are on standby, meaning a unit is idle but ready to become active in the event of an alarm condition in one of the operating units or based on a rotation schedule. When a unit is in standby mode, fan(s) are off and no cooling occurs. In multiple cooling unit systems, assigning units to standby lets you: • Configure redundancy in case of failure scenarios (standby). • Manage cooling unit run time (lead/lag). See Setting a Rotation Schedule on the next page . • Modulate for very low loads to full design load (to be temperature reactive) by cascading activation of standby units (configured when setting up teamwork mode). iCOM Manual at p. 103.

JS 44 (Rev. 03/24)

CIVIL COVER SHEET

The JS 44 civil cover sheet and the information contained herein neither replace nor supplement the filing and service of pleadings or other papers as required by law, except as provided by local rules of court. This form, approved by the Judicial Conference of the United States in September 1974, is required for the use of the Clerk of Court for the purpose of initiating the civil docket sheet. *(SEE INSTRUCTIONS ON NEXT PAGE OF THIS FORM.)*

I. (a) PLAINTIFFS

VALTRUS INNOVATIONS LTD. and KEY PATENT INNOVATIONS LTD.

(b) County of Residence of First Listed Plaintiff _____
(EXCEPT IN U.S. PLAINTIFF CASES)

(c) Attorneys *(Firm Name, Address, and Telephone Number)*

Eric H. Findlay; Findlay Craft, P.C., 7270 Crosswater Avenue, Suite B, Tyler, Texas 75703; 903-534-1100

DEFENDANTS

DataBank Holdings, Ltd.

County of Residence of First Listed Defendant _____
(IN U.S. PLAINTIFF CASES ONLY)

NOTE: IN LAND CONDEMNATION CASES, USE THE LOCATION OF THE TRACT OF LAND INVOLVED.

Attorneys *(If Known)*

II. BASIS OF JURISDICTION *(Place an "X" in One Box Only)*

- ☐ 1 U.S. Government Plaintiff
- ☐ 3 Federal Question *(U.S. Government Not a Party)*
- ☐ 2 U.S. Government Defendant
- ☐ 4 Diversity *(Indicate Citizenship of Parties in Item III)*

III. CITIZENSHIP OF PRINCIPAL PARTIES *(Place an "X" in One Box for Plaintiff and One Box for Defendant)*

(For Diversity Cases Only)

	PTF	DEF		PTF	DEF
Citizen of This State	☐ 1	☐ 1	Incorporated *or* Principal Place of Business In This State	☐ 4	☐ 4
Citizen of Another State	☐ 2	☐ 2	Incorporated *and* Principal Place of Business In Another State	☐ 5	☐ 5
Citizen or Subject of a Foreign Country	☐ 3	☐ 3	Foreign Nation	☐ 6	☐ 6

IV. NATURE OF SUIT *(Place an "X" in One Box Only)*

Click here for: Nature of Suit Code Descriptions.

CONTRACT
- ☐ 110 Insurance
- ☐ 120 Marine
- ☐ 130 Miller Act
- ☐ 140 Negotiable Instrument
- ☐ 150 Recovery of Overpayment & Enforcement of Judgment
- ☐ 151 Medicare Act
- ☐ 152 Recovery of Defaulted Student Loans (Excludes Veterans)
- ☐ 153 Recovery of Overpayment of Veteran's Benefits
- ☐ 160 Stockholders' Suits
- ☐ 190 Other Contract
- ☐ 195 Contract Product Liability
- ☐ 196 Franchise

REAL PROPERTY
- ☐ 210 Land Condemnation
- ☐ 220 Foreclosure
- ☐ 230 Rent Lease & Ejectment
- ☐ 240 Torts to Land
- ☐ 245 Tort Product Liability
- ☐ 290 All Other Real Property

TORTS

PERSONAL INJURY
- ☐ 310 Airplane
- ☐ 315 Airplane Product Liability
- ☐ 320 Assault, Libel & Slander
- ☐ 330 Federal Employers' Liability
- ☐ 340 Marine
- ☐ 345 Marine Product Liability
- ☐ 350 Motor Vehicle
- ☐ 355 Motor Vehicle Product Liability
- ☐ 360 Other Personal Injury
- ☐ 362 Personal Injury - Medical Malpractice

PERSONAL INJURY
- ☐ 365 Personal Injury - Product Liability
- ☐ 367 Health Care/ Pharmaceutical Personal Injury Product Liability
- ☐ 368 Asbestos Personal Injury Product Liability

PERSONAL PROPERTY
- ☐ 370 Other Fraud
- ☐ 371 Truth in Lending
- ☐ 380 Other Personal Property Damage
- ☐ 385 Property Damage Product Liability

CIVIL RIGHTS
- ☐ 440 Other Civil Rights
- ☐ 441 Voting
- ☐ 442 Employment
- ☐ 443 Housing/ Accommodations
- ☐ 445 Amer. w/Disabilities - Employment
- ☐ 446 Amer. w/Disabilities - Other
- ☐ 448 Education

PRISONER PETITIONS

Habeas Corpus:
- ☐ 463 Alien Detainee
- ☐ 510 Motions to Vacate Sentence
- ☐ 530 General
- ☐ 535 Death Penalty

Other:
- ☐ 540 Mandamus & Other
- ☐ 550 Civil Rights
- ☐ 555 Prison Condition
- ☐ 560 Civil Detainee - Conditions of Confinement

FORFEITURE/PENALTY
- ☐ 625 Drug Related Seizure of Property 21 USC 881
- ☐ 690 Other

LABOR
- ☐ 710 Fair Labor Standards Act
- ☐ 720 Labor/Management Relations
- ☐ 740 Railway Labor Act
- ☐ 751 Family and Medical Leave Act
- ☐ 790 Other Labor Litigation
- ☐ 791 Employee Retirement Income Security Act

IMMIGRATION
- ☐ 462 Naturalization Application
- ☐ 465 Other Immigration Actions

BANKRUPTCY
- ☐ 422 Appeal 28 USC 158
- ☐ 423 Withdrawal 28 USC 157

INTELLECTUAL PROPERTY RIGHTS
- ☐ 820 Copyrights
- ☐ 830 Patent
- ☐ 835 Patent - Abbreviated New Drug Application
- ☐ 840 Trademark
- ☐ 880 Defend Trade Secrets Act of 2016

SOCIAL SECURITY
- ☐ 861 HIA (1395ff)
- ☐ 862 Black Lung (923)
- ☐ 863 DIWC/DIWW (405(g))
- ☐ 864 SSID Title XVI
- ☐ 865 RSI (405(g))

FEDERAL TAX SUITS
- ☐ 870 Taxes (U.S. Plaintiff or Defendant)
- ☐ 871 IRS—Third Party 26 USC 7609

OTHER STATUTES
- ☐ 375 False Claims Act
- ☐ 376 Qui Tam (31 USC 3729(a))
- ☐ 400 State Reapportionment
- ☐ 410 Antitrust
- ☐ 430 Banks and Banking
- ☐ 450 Commerce
- ☐ 460 Deportation
- ☐ 470 Racketeer Influenced and Corrupt Organizations
- ☐ 480 Consumer Credit (15 USC 1681 or 1692)
- ☐ 485 Telephone Consumer Protection Act
- ☐ 490 Cable/Sat TV
- ☐ 850 Securities/Commodities/ Exchange
- ☐ 890 Other Statutory Actions
- ☐ 891 Agricultural Acts
- ☐ 893 Environmental Matters
- ☐ 895 Freedom of Information Act
- ☐ 896 Arbitration
- ☐ 899 Administrative Procedure Act/Review or Appeal of Agency Decision
- ☐ 950 Constitutionality of State Statutes

V. ORIGIN *(Place an "X" in One Box Only)*

- ☐ 1 Original Proceeding
- ☐ 2 Removed from State Court
- ☐ 3 Remanded from Appellate Court
- ☐ 4 Reinstated or Reopened
- ☐ 5 Transferred from Another District *(specify)*
- ☐ 6 Multidistrict Litigation - Transfer
- ☐ 8 Multidistrict Litigation - Direct File

VI. CAUSE OF ACTION

Cite the U.S. Civil Statute under which you are filing ***(Do not cite jurisdictional statutes unless diversity)***:
35 U.S.C. §§ 271, 281, 283, 284, and 285

Brief description of cause:
Patent infringement

VII. REQUESTED IN COMPLAINT:

☐ CHECK IF THIS IS A **CLASS ACTION** UNDER RULE 23, F.R.Cv.P.

DEMAND $

CHECK YES only if demanded in complaint:
JURY DEMAND: ☐ Yes ☐ No

VIII. RELATED CASE(S) IF ANY

(See instructions): JUDGE Judge Gilstrap DOCKET NUMBER 2:24-cv-00776-JRG

DATE 9/25/2024

SIGNATURE OF ATTORNEY OF RECORD /s/ Eric H. Findlay

FOR OFFICE USE ONLY

RECEIPT # _____ AMOUNT _____ APPLYING IFP _____ JUDGE _____ MAG. JUDGE _____

INSTRUCTIONS FOR ATTORNEYS COMPLETING CIVIL COVER SHEET FORM JS 44

Authority For Civil Cover Sheet

The JS 44 civil cover sheet and the information contained herein neither replaces nor supplements the filings and service of pleading or other papers as required by law, except as provided by local rules of court. This form, approved by the Judicial Conference of the United States in September 1974, is required for the use of the Clerk of Court for the purpose of initiating the civil docket sheet. Consequently, a civil cover sheet is submitted to the Clerk of Court for each civil complaint filed. The attorney filing a case should complete the form as follows:

I.(a) **Plaintiffs-Defendants.** Enter names (last, first, middle initial) of plaintiff and defendant. If the plaintiff or defendant is a government agency, use only the full name or standard abbreviations. If the plaintiff or defendant is an official within a government agency, identify first the agency and then the official, giving both name and title.

(b) **County of Residence.** For each civil case filed, except U.S. plaintiff cases, enter the name of the county where the first listed plaintiff resides at the time of filing. In U.S. plaintiff cases, enter the name of the county in which the first listed defendant resides at the time of filing. (NOTE: In land condemnation cases, the county of residence of the "defendant" is the location of the tract of land involved.)

(c) **Attorneys.** Enter the firm name, address, telephone number, and attorney of record. If there are several attorneys, list them on an attachment, noting in this section "(see attachment)".

II. **Jurisdiction.** The basis of jurisdiction is set forth under Rule 8(a), F.R.Cv.P., which requires that jurisdictions be shown in pleadings. Place an "X" in one of the boxes. If there is more than one basis of jurisdiction, precedence is given in the order shown below.
United States plaintiff. (1) Jurisdiction based on 28 U.S.C. 1345 and 1348. Suits by agencies and officers of the United States are included here.
United States defendant. (2) When the plaintiff is suing the United States, its officers or agencies, place an "X" in this box.
Federal question. (3) This refers to suits under 28 U.S.C. 1331, where jurisdiction arises under the Constitution of the United States, an amendment to the Constitution, an act of Congress or a treaty of the United States. In cases where the U.S. is a party, the U.S. plaintiff or defendant code takes precedence, and box 1 or 2 should be marked.
Diversity of citizenship. (4) This refers to suits under 28 U.S.C. 1332, where parties are citizens of different states. When Box 4 is checked, the citizenship of the different parties must be checked. (See Section III below**; NOTE: federal question actions take precedence over diversity cases.**)

III. **Residence (citizenship) of Principal Parties.** This section of the JS 44 is to be completed if diversity of citizenship was indicated above. Mark this section for each principal party.

IV. **Nature of Suit.** Place an "X" in the appropriate box. If there are multiple nature of suit codes associated with the case, pick the nature of suit code that is most applicable. Click here for: Nature of Suit Code Descriptions.

V. **Origin.** Place an "X" in one of the seven boxes.
Original Proceedings. (1) Cases which originate in the United States district courts.
Removed from State Court. (2) Proceedings initiated in state courts may be removed to the district courts under Title 28 U.S.C., Section 1441.
Remanded from Appellate Court. (3) Check this box for cases remanded to the district court for further action. Use the date of remand as the filing date.
Reinstated or Reopened. (4) Check this box for cases reinstated or reopened in the district court. Use the reopening date as the filing date.
Transferred from Another District. (5) For cases transferred under Title 28 U.S.C. Section 1404(a). Do not use this for within district transfers or multidistrict litigation transfers.
Multidistrict Litigation – Transfer. (6) Check this box when a multidistrict case is transferred into the district under authority of Title 28 U.S.C. Section 1407.
Multidistrict Litigation – Direct File. (8) Check this box when a multidistrict case is filed in the same district as the Master MDL docket.
PLEASE NOTE THAT THERE IS NOT AN ORIGIN CODE 7. Origin Code 7 was used for historical records and is no longer relevant due to changes in statute.

VI. **Cause of Action.** Report the civil statute directly related to the cause of action and give a brief description of the cause. **Do not cite jurisdictional statutes unless diversity.** Example: U.S. Civil Statute: 47 USC 553 Brief Description: Unauthorized reception of cable service.

VII. **Requested in Complaint.** Class Action. Place an "X" in this box if you are filing a class action under Rule 23, F.R.Cv.P.
Demand. In this space enter the actual dollar amount being demanded or indicate other demand, such as a preliminary injunction.
Jury Demand. Check the appropriate box to indicate whether or not a jury is being demanded.

VIII. **Related Cases.** This section of the JS 44 is used to reference related cases, if any. If there are related cases, insert the docket numbers and the corresponding judge names for such cases.

Date and Attorney Signature. Date and sign the civil cover sheet.