US005979167A

United States Patent [19]

Kochavi et al.

[11] **Patent Number: 5,979,167**

[45] **Date of Patent: Nov. 9, 1999**

[54] **CENTRAL AIR CONDITIONING SYSTEM**

[75] Inventors: **Dov Kochavi**; **Andre Golan**, both of Raanana, Israel

[73] Assignee: **Acclim-Line Ltd.**, Raanana, Israel

[21] Appl. No.: **08/783,761**

[22] Filed: **Jan. 15, 1997**

[30] **Foreign Application Priority Data**

Jan. 15, 1996 [IL] Israel 116764

[51] **Int. Cl.**[6] **F25D 17/04**

[52] **U.S. Cl.** **62/186**; 62/187; 62/203; 62/510

[58] **Field of Search** 62/186, 187, 160, 62/203, 204, 510

[56] **References Cited**

U.S. PATENT DOCUMENTS

2,259,780	10/1941	Seid	62/186
4,201,065	5/1980	Griffin	62/510
4,406,397	9/1983	Kamata et al. .	
4,635,445	1/1987	Otsuka et al. .	
4,635,455	1/1987	Oliver .	
4,976,116	12/1990	Hayama et al.	62/510 X
4,997,030	3/1991	Goto et al. .	
5,076,344	12/1991	Fields et al. .	
5,247,806	9/1993	Ebisu et al. .	
5,413,165	5/1995	Wylie	62/186 X

FOREIGN PATENT DOCUMENTS

37306 3/1995 Israel .

OTHER PUBLICATIONS

VVT System, Carrier Publication No. 13301, Aug. 20, 1990.

Primary Examiner—Henry Bennett
Assistant Examiner—Marc Norman
Attorney, Agent, or Firm—Abelman, Frayne & Schwab

[57] **ABSTRACT**

The present invention discloses an air conditioning system including at least first and second compressors, at least first and second heat exchangers associated respectively with the at least first and second compressors, at least third and fourth heat exchangers in refrigerant fluid communication respectively with the at least first and second heat exchangers, the at least third and fourth heat exchangers also being in heat exchange communication with a stream of air to be conditioned, an air flow pathway arranged to receive the stream of air downstream of the third and fourth heat exchangers and to direct it to a plurality of enclosures via a plurality of air outlets, and a control system operative to selectably operate the at least first and second compressors, such that none, all or some of the at least first and second compressors operate at a given time.

11 Claims, 12 Drawing Sheets

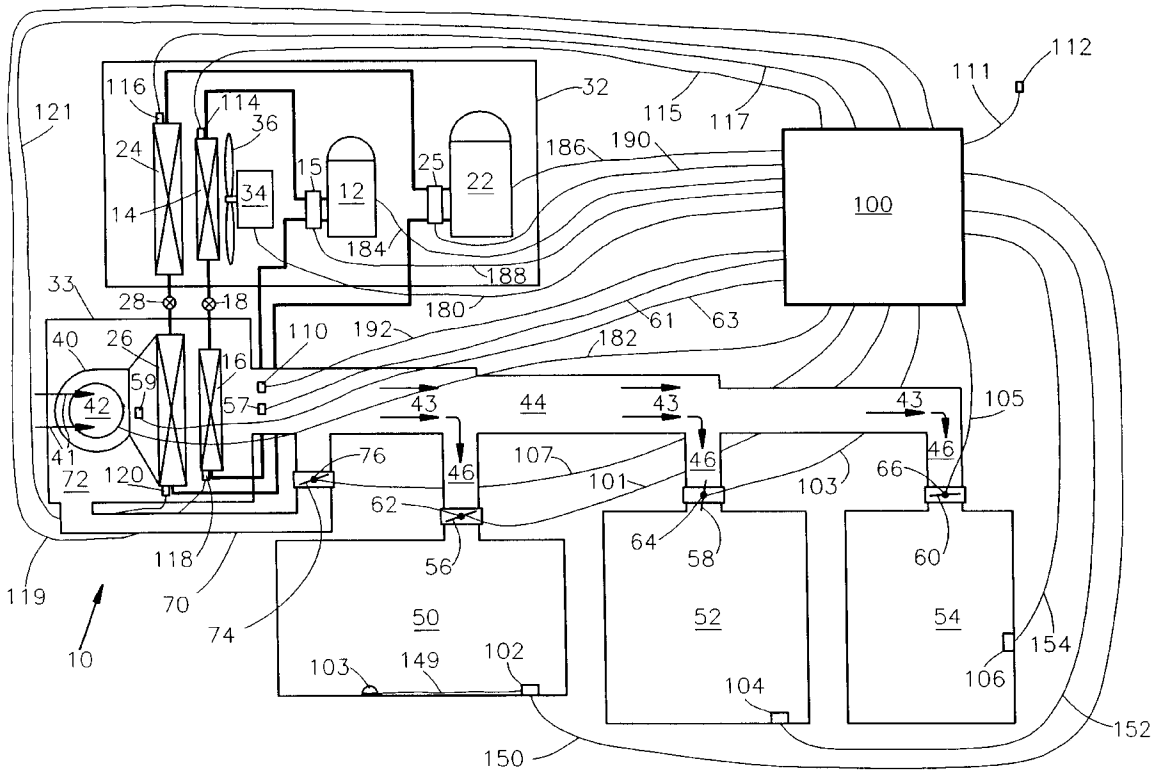

Vertiv Ex. 1011
Vertiv v. Valtrus

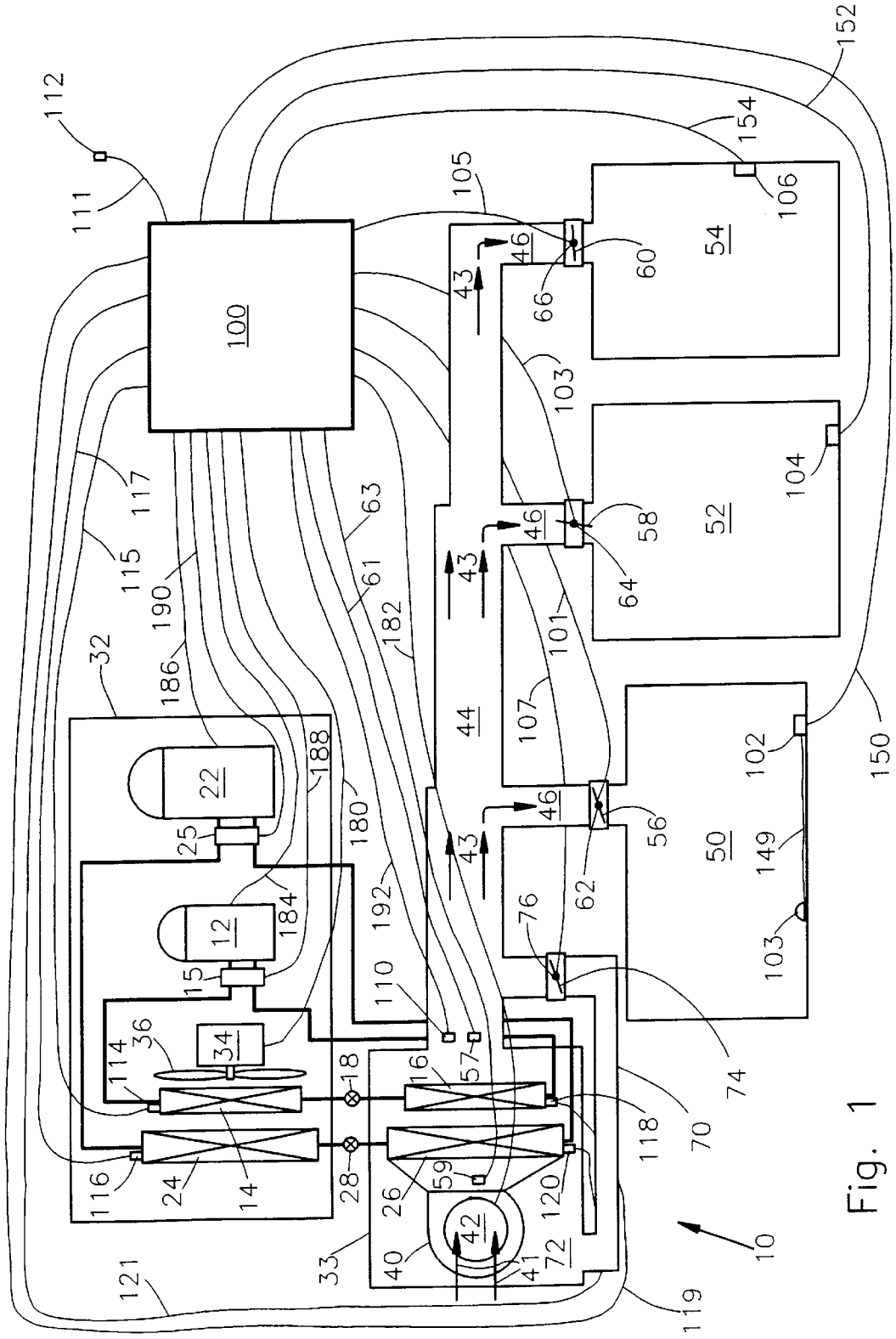

Fig. 1

Vertiv Ex. 1011
Vertiv v. Valtrus

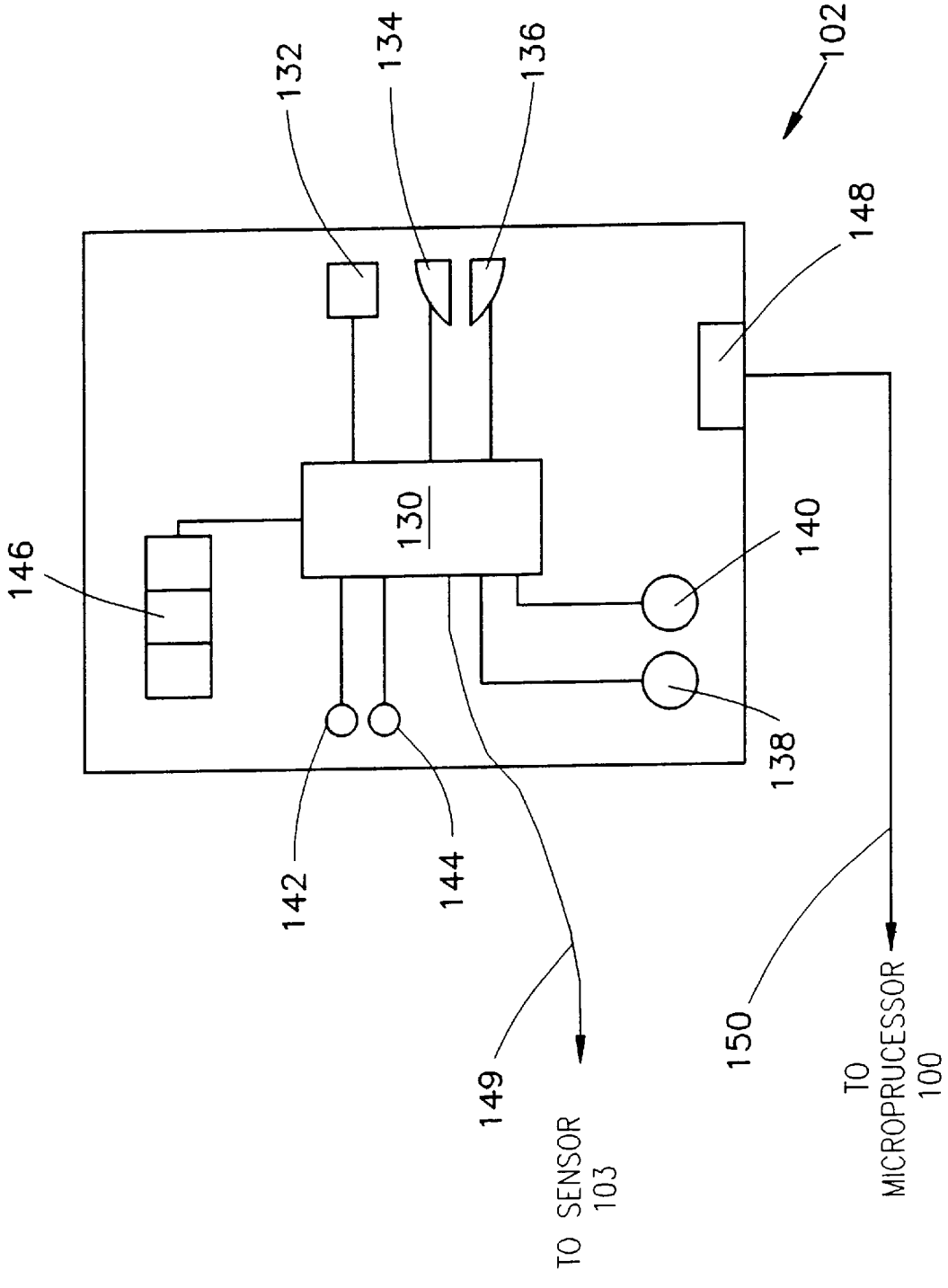
132
134
136
102
148
130
146
140
138
142
144
149
150
TO SENSOR 103
TO MICROPRUCESSOR 100

Fig. 2

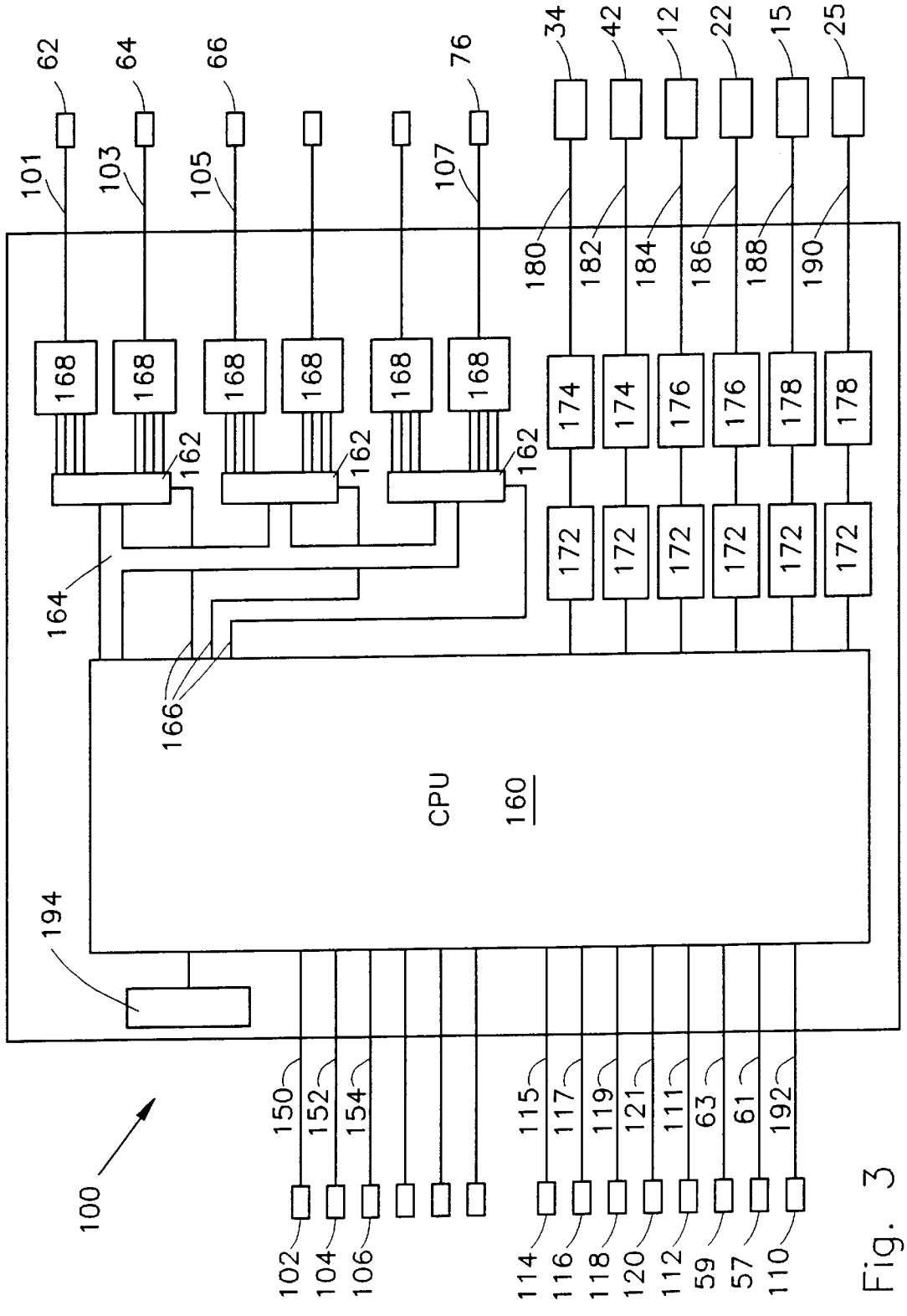
CPU
160
100
101
103
105
107
62
64
66
76
34
42
12
22
15
25
168
162
164
166
174
176
178
172
180
182
184
186
188
190
194
150
152
154
115
117
119
121
111
63
61
192
102
104
106
114
116
118
120
112
59
57
110

Fig. 3

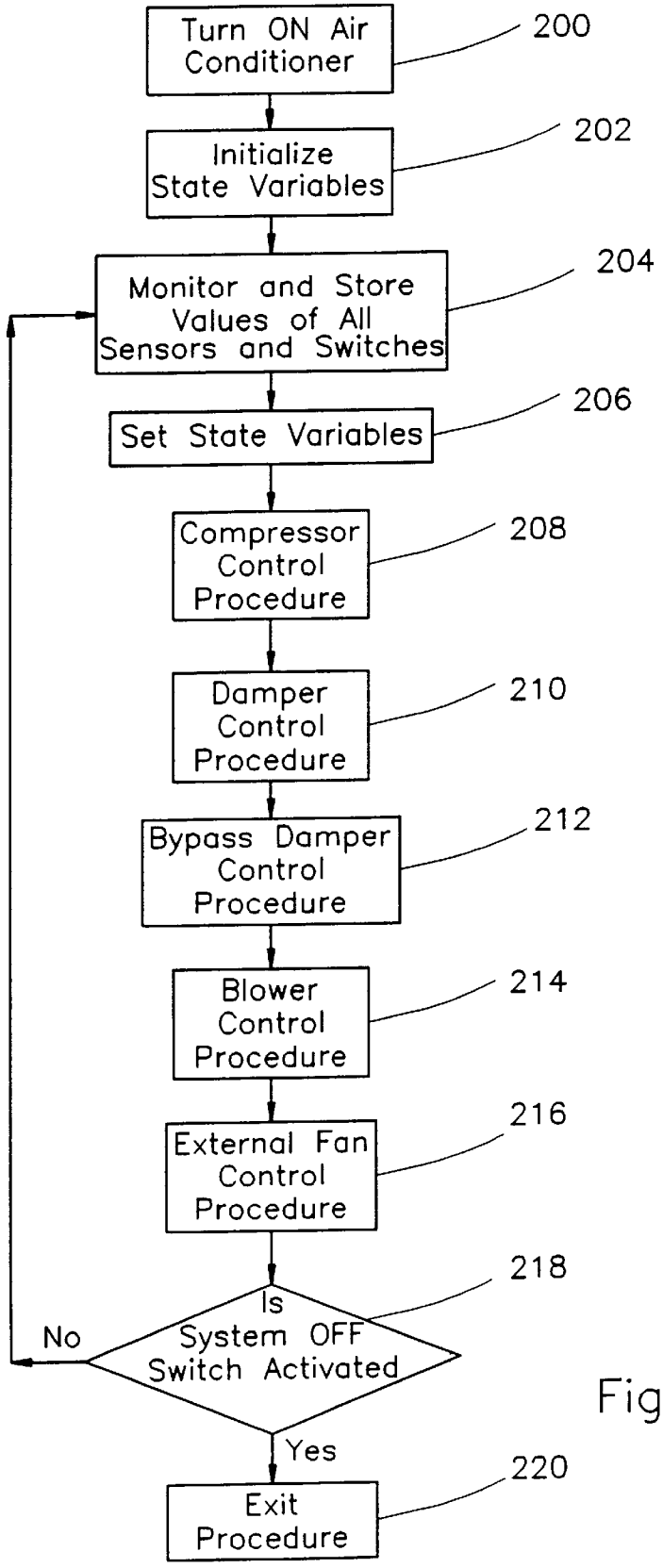
Turn ON Air Conditioner
200
Initialize State Variables
202
Monitor and Store Values of All Sensors and Switches
204
Set State Variables
206
Compressor Control Procedure
208
Damper Control Procedure
210
Bypass Damper Control Procedure
212
Blower Control Procedure
214
External Fan Control Procedure
216
Is System OFF Switch Activated
218
No
Yes
Exit Procedure
220

Fig. 4

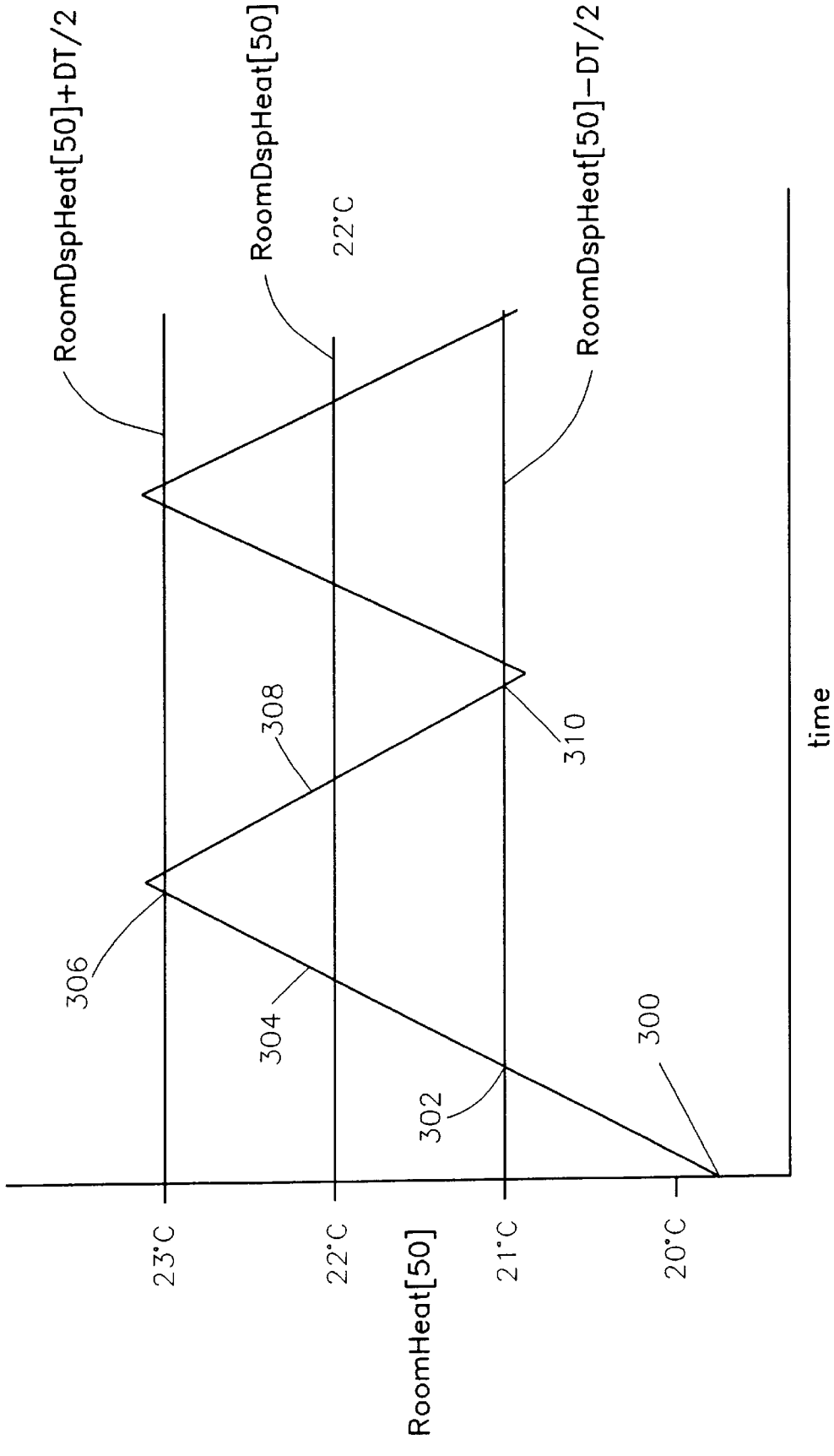
RoomDspHeat[50]+DT/2
RoomDspHeat[50]
22°C
RoomDspHeat[50]−DT/2
306
308
304
302
310
300
time
23°C
22°C
21°C
20°C
RoomHeat[50]

Fig. 5

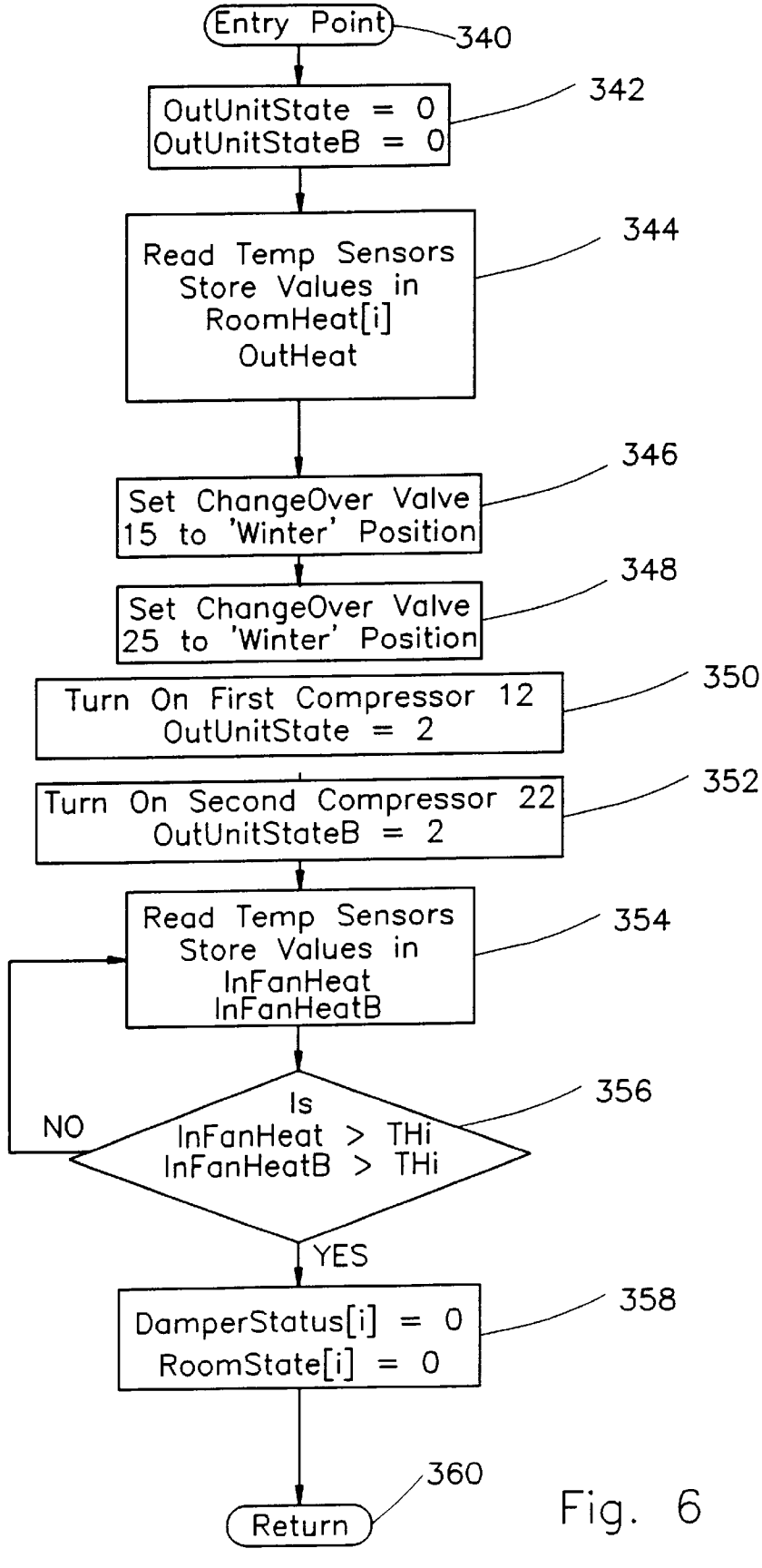
Entry Point
340
OutUnitState = 0
OutUnitStateB = 0
342
Read Temp Sensors
Store Values in
RoomHeat[i]
OutHeat
344
Set ChangeOver Valve
15 to 'Winter' Position
346
Set ChangeOver Valve
25 to 'Winter' Position
348
Turn On First Compressor 12
OutUnitState = 2
350
Turn On Second Compressor 22
OutUnitStateB = 2
352
Read Temp Sensors
Store Values in
InFanHeat
InFanHeatB
354
Is
InFanHeat > THi
InFanHeatB > THi
356
NO
YES
DamperStatus[i] = 0
RoomState[i] = 0
358
Return
360

Fig. 6

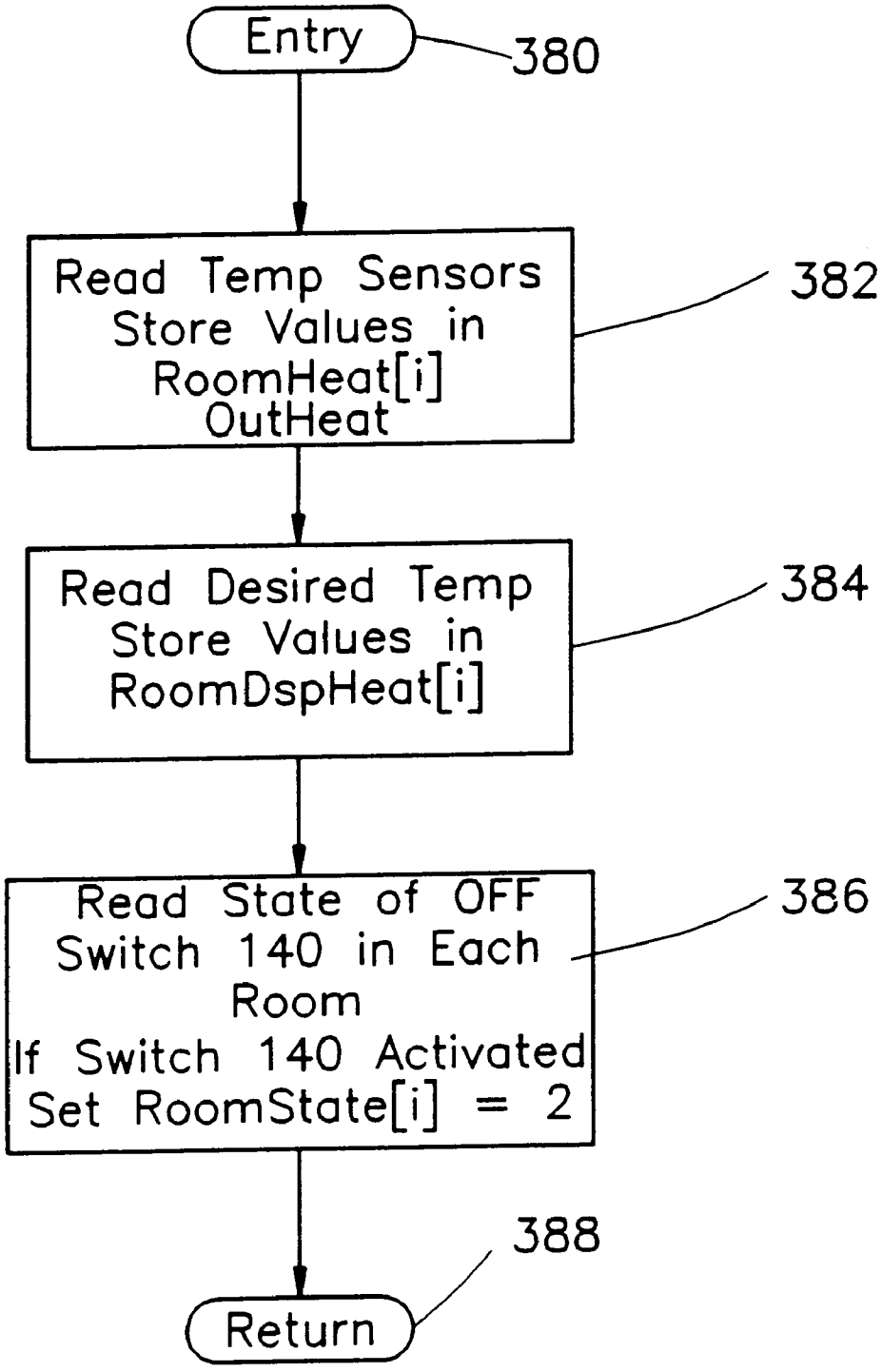
Entry
380
Read Temp Sensors
Store Values in
RoomHeat[i]
OutHeat
382
Read Desired Temp
Store Values in
RoomDspHeat[i]
384
Read State of OFF
Switch 140 in Each
Room
If Switch 140 Activated
Set RoomState[i] = 2
386
388
Return

Fig. 7

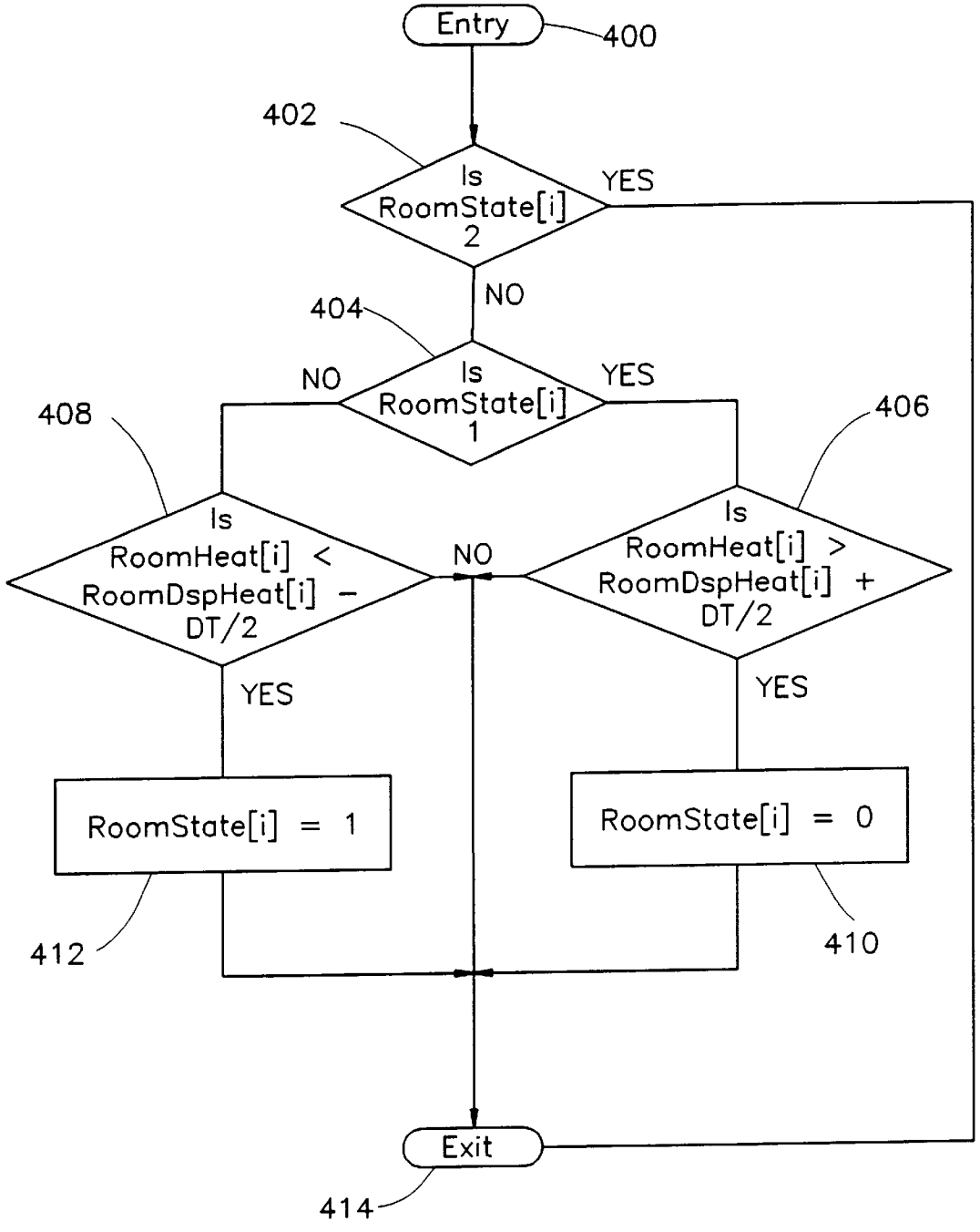
Entry
400
402
Is RoomState[i] 2
YES
NO
404
Is RoomState[i] 1
NO
YES
408
406
Is RoomHeat[i] < RoomDspHeat[i] − DT/2
NO
Is RoomHeat[i] > RoomDspHeat[i] + DT/2
YES
YES
RoomState[i] = 1
RoomState[i] = 0
412
410
Exit
414

Fig. 8

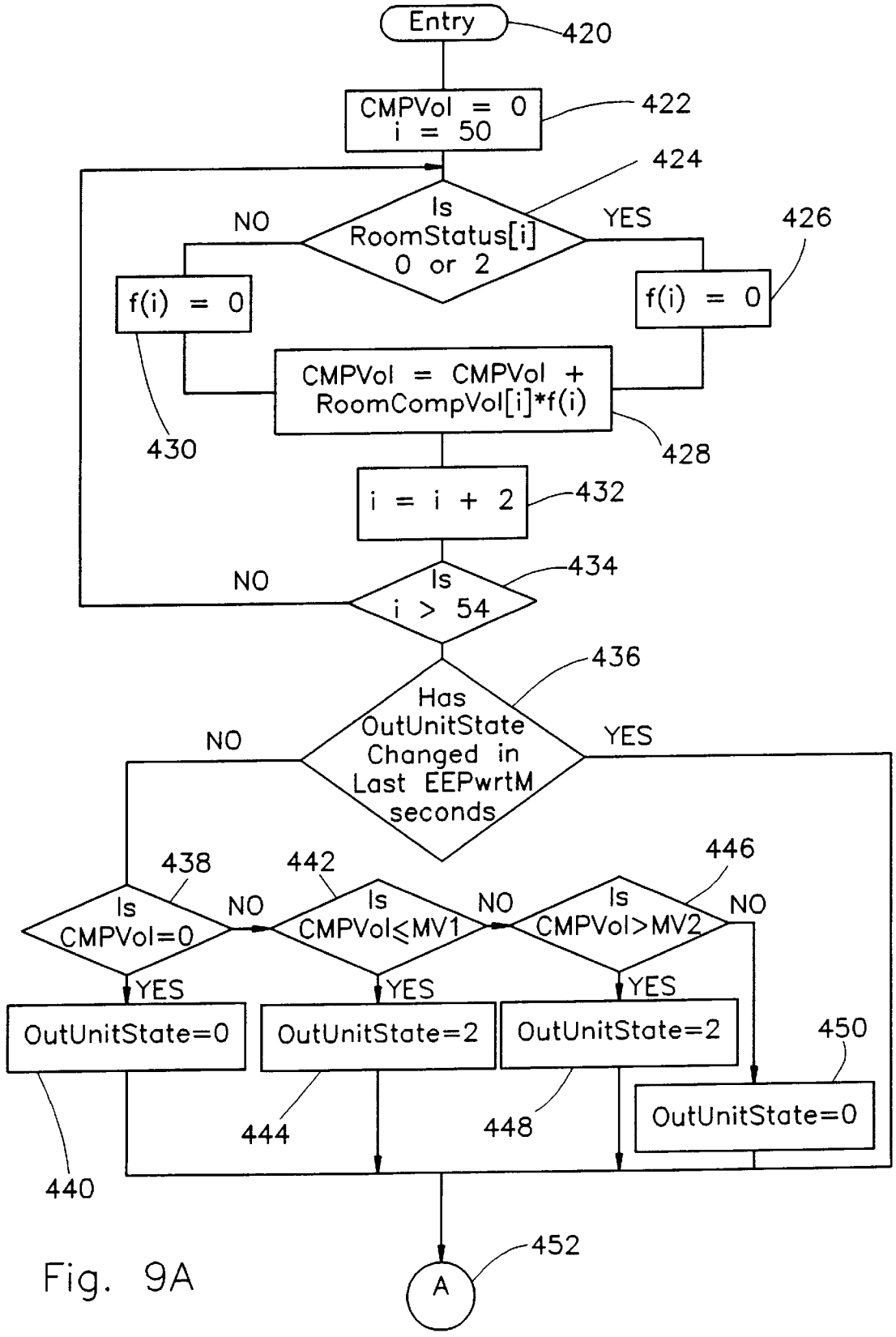

Fig. 9A

Vertiv Ex. 1011
Vertiv v. Valtrus

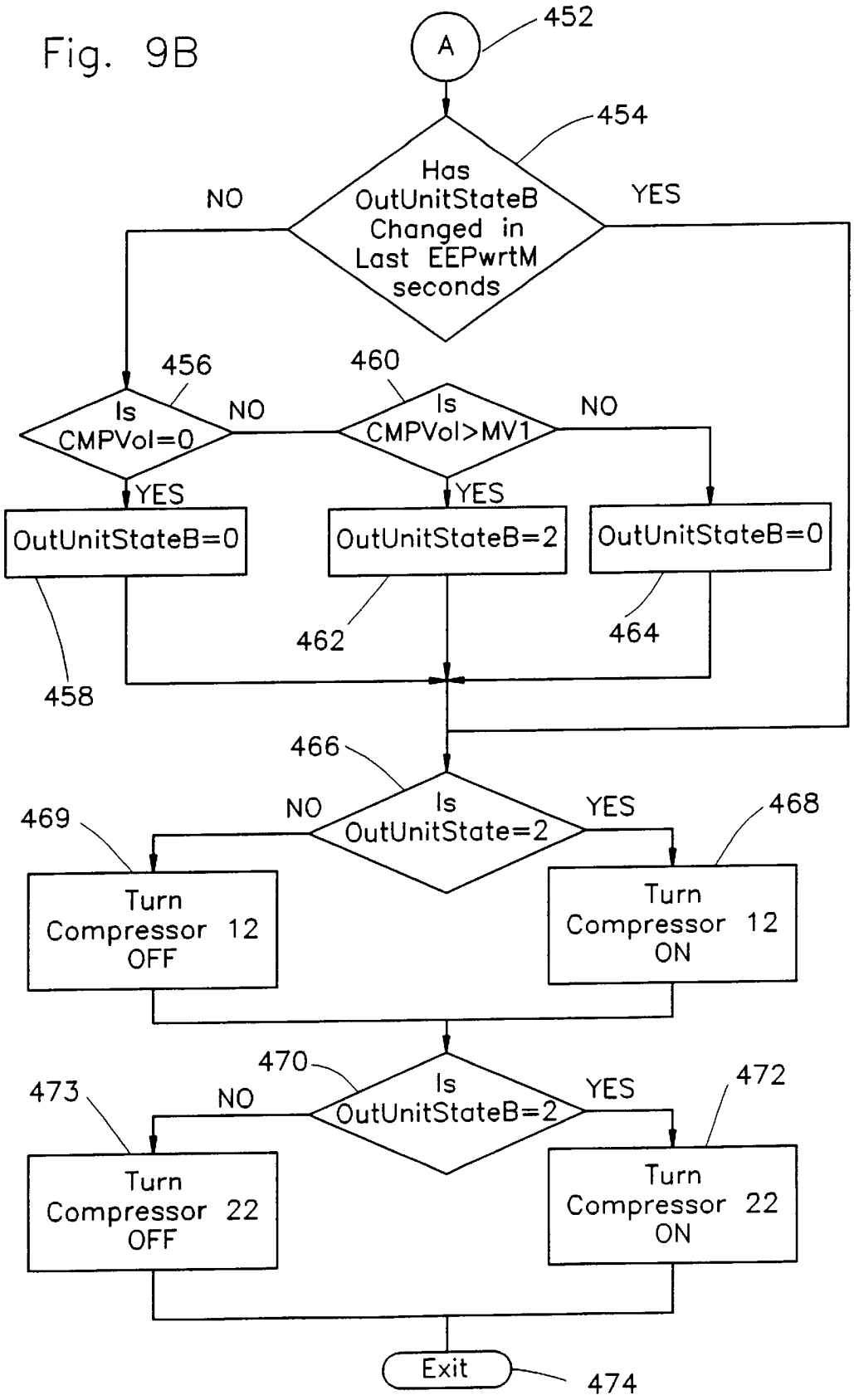
Fig. 9B
A
452
454
Has OutUnitStateB Changed in Last EEPwrtM seconds
NO
YES
456
Is CMPVol=0
NO
YES
460
Is CMPVol>MV1
NO
YES
OutUnitStateB=0
OutUnitStateB=2
OutUnitStateB=0
458
462
464
466
Is OutUnitState=2
NO
YES
469
468
Turn Compressor 12 OFF
Turn Compressor 12 ON
470
Is OutUnitStateB=2
NO
YES
473
472
Turn Compressor 22 OFF
Turn Compressor 22 ON
Exit
474

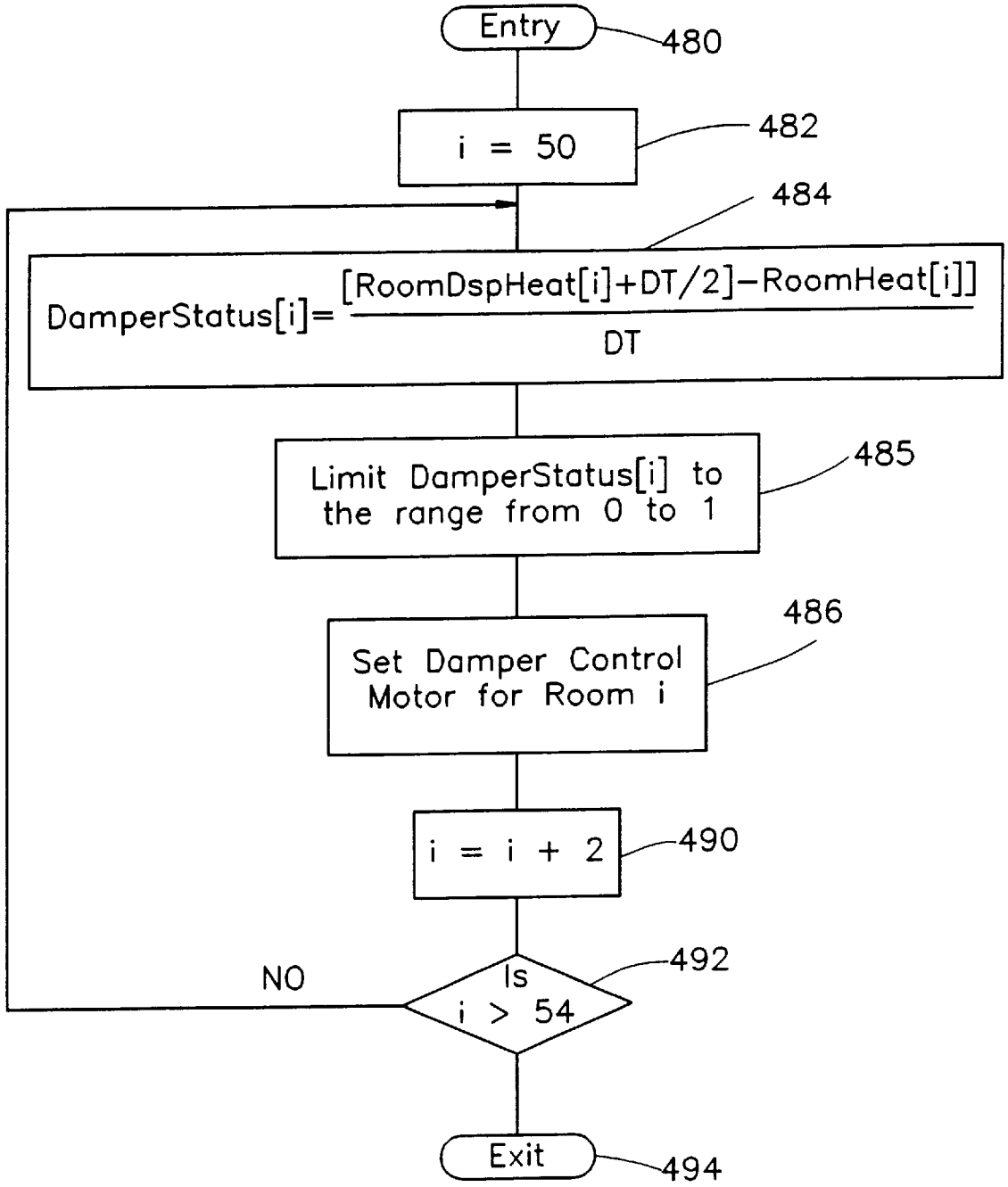
Entry
480
i = 50
482
484
DamperStatus[i]= [RoomDspHeat[i]+DT/2]−RoomHeat[i] / DT
Limit DamperStatus[i] to the range from 0 to 1
485
Set Damper Control Motor for Room i
486
i = i + 2
490
Is i > 54
492
NO
Exit
494

Fig. 10

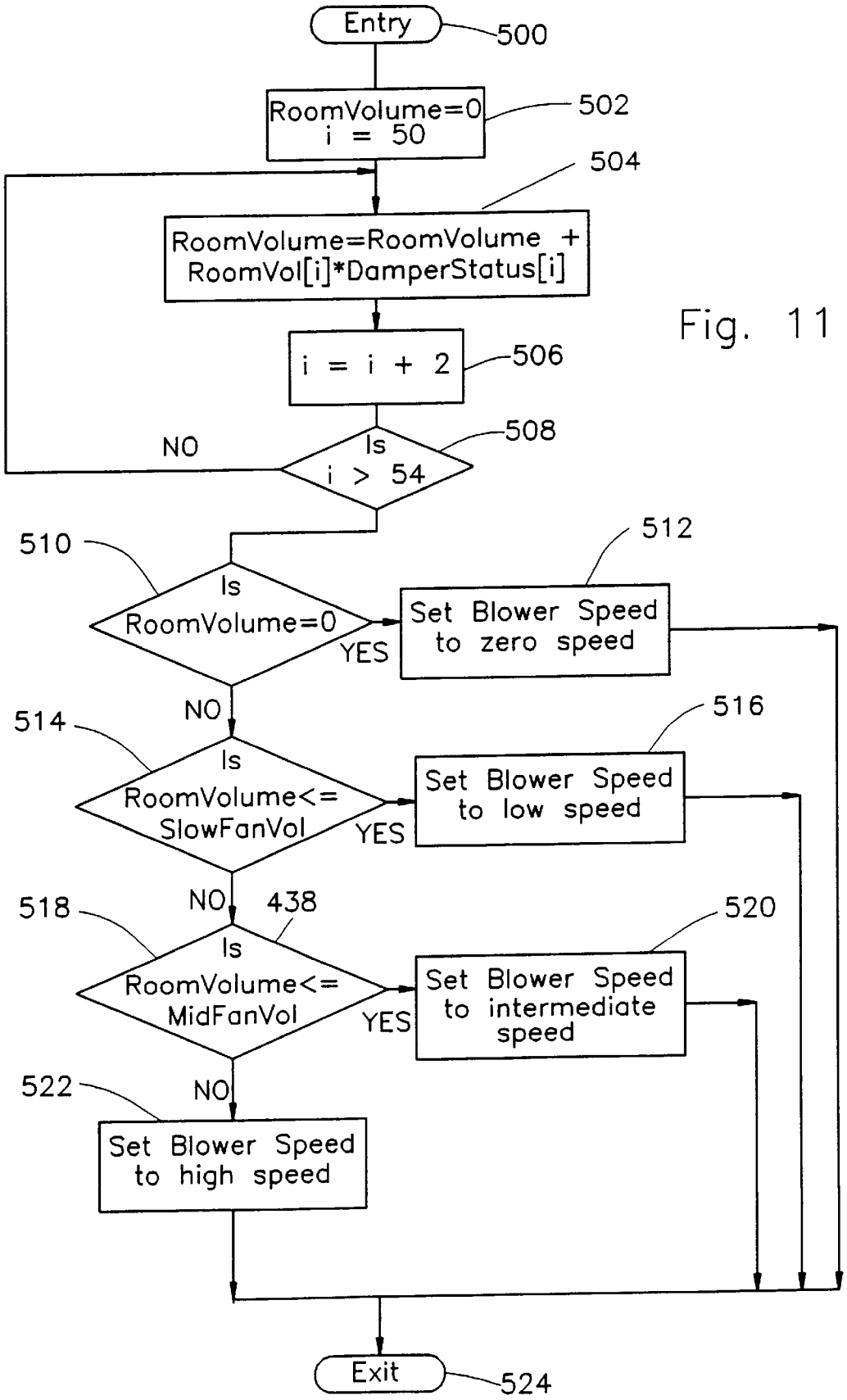
Entry
500
RoomVolume=0
i = 50
502
504
RoomVolume=RoomVolume +
RoomVol[i]*DamperStatus[i]
i = i + 2
506
NO
Is
i > 54
508
510
Is
RoomVolume=0
YES
512
Set Blower Speed
to zero speed
NO
514
Is
RoomVolume<=
SlowFanVol
YES
516
Set Blower Speed
to low speed
NO
438
518
Is
RoomVolume<=
MidFanVol
YES
520
Set Blower Speed
to intermediate
speed
522
NO
Set Blower Speed
to high speed
Exit
524

Fig. 11

CENTRAL AIR CONDITIONING SYSTEM

FIELD OF THE INVENTION

The present invention relates to air conditioning systems in general and to central air conditioning systems in particular.

BACKGROUND OF THE INVENTION

Various central air conditioning systems are known in the art which provide conditioned air to a plurality of rooms wherein the temperature of each of the rooms may be controlled independently.

One such prior art attempt is the VVT System marketed by the Carrier Corporation of Minnville, Tenn. in the United States and described in the Carrier publication No. 13301 of Aug. 20, 1990. The VVT System divides the rooms to be air conditioned into a number of zones and controls the amount of conditioned air entering each zone by means of controllable dampers operating in response to the temperature in each of the zones.

As the temperature in each of the rooms changes, the dampers are opened or closed accordingly, thereby maintaining a desired temperature in each of the rooms or zones. If several of the rooms or zones are at the desired temperature, the dampers to these rooms are closed, thereby preventing the flow of conditioned air into these rooms. The dampers leading to the rooms which are not at the desired temperature are opened and the flow of conditioned air is directed to those rooms only. As long as there is a requirement for conditioned air from any of the rooms, the compressor of the heat pump must operate, thereby consuming substantial amounts of electrical energy. The excess thermal capacity of the compressor when operating under such part load conditions is wasted

Another such prior art device is described in U.S. Pat. No. 4,635,455 to Otsuka et al. The Otsuka prior art device measures the heat load in each room by means of temperature sensors and controls the quantity of air to be directed to each room by means of variable dampers. The pressure in the main air duct is also measured and the speed of the blower adjusted accordingly. Under part load conditions, the speed of the compressor is reduced so as to conserve energy.

As in know in the art, operation of a compressor at reduced speeds results in inefficient operation of the compressor as well as requiring an expensive speed controller for controlling the speed of the electric motor which drives the compressor. Furthermore, a compressor capable of operating at a number of different speeds or over a continuous speed range is more costly than a compressor designed to operate at a single speed.

SUMMARY OF THE INVENTION

The present invention seeks to provide an air conditioning system which overcomes the drawbacks of the prior art devices and provides effective control of the temperature in each of the air conditioned rooms.

There is thus provided in accordance with a preferred embodiment of the present invention, a central air conditioning system including

at least first and second compressors,

at least first and second heat exchangers associated respectively with the at least first and second compressors,

at least third and fourth heat exchangers in refrigerant fluid communication respectively with the at least first and second heat exchangers, the at least third and fourth heat exchangers also being in heat exchange communication with a stream of air to be conditioned,

an air flow pathway arranged to receive the stream of air downstream of the third and fourth heat exchangers and to direct it to a plurality of enclosures via a plurality of air outlets, and

a control system operative to selectably operate the first and second compressors, such that none, all or some of the at least first and second compressors operate at a given time.

Additionally in accordance with a preferred embodiment of the present invention, the plurality of outlets are equipped with individually controllable dampers and the control system also selectably operates the individually controllable dampers.

Still further in accordance with a preferred embodiment of the present invention, the control system operates the individually controllable dampers at least partially in response to the relationship between the heat loads in the plurality of enclosures.

Further in accordance with a preferred embodiment of the present invention, the control system selectably operates the at least first and second compressors at least partially responsive to the total heat load in the plurality of enclosures.

Still further in accordance with a preferred embodiment of the present invention, the central air conditioning system also includes a variable speed air blower assembly operative to force air past the at least third and fourth heat exchangers.

Further in accordance with a preferred embodiment of the present invention, the control system is operative to control the speed of operation of the first variable speed air blower at least partially in response to the total heat load in the plurality of enclosures.

Additionally in accordance with a preferred embodiment of the present invention, the central air conditioning system also includes a second variable speed air blower assembly operative to force air past the at least first and second heat exchangers.

Still further in accordance with a preferred embodiment of the present invention, the control system is operative to control the speed of operation of the second variable speed air blower at least partially in response to the total heat load in the plurality of enclosures.

There is also provided in accordance with another preferred embodiment of the present invention an air conditioning system including

at least one compressor,

at least one first heat exchanger associated with the at least one compressor,

at least one second heat exchanger in refrigerant fluid communication respectively with the at least first heat exchanger, the at least one second heat exchanger also being in heat exchange communication with a stream of air to be conditioned,

an air flow pathway arranged to receive the stream of air downstream of the at least second heat exchanger and to direct it to a plurality of enclosures via a plurality of air outlets equipped with individually controllable dampers, and

a control system operative to selectably operate the at least one compressor and said individually controllable dampers, at least partially in response to the relationship between the heat loads in the plurality of enclosures.

Vertiv Ex. 1011
Vertiv v. Valtrus

Additionally in accordance with a preferred embodiment of the present invention, the control system selectably operates the at least one compressor at least partially in responsive to the total heat load in the plurality of enclosures.

Still further in accordance with a preferred embodiment of the present invention, the central air conditioning system also includes a first variable speed air blower assembly operative to force air past the at least one second heat exchanger.

Still further in accordance with a preferred embodiment of the present invention, the control system also includes a data port communicating with the control system to permit external programming and monitoring of the operation thereof.

BRIEF DESCRIPTION OF THE DRAWINGS

The present invention will be understood and appreciated from the following detailed description, taken in conjunction with the drawings in which:

FIG. **1** is a schematic illustration of a central air conditioning system constructed and operative in accordance with a preferred embodiment of the present invention;

FIG. **2** is a schematic illustration of a room temperature controller useful in the central air conditioning system of FIG. **1**;

FIG. **3** is a schematic illustration of a control system useful in the central air conditioning system of FIG. **1**;

FIG. **4** is a simplified flow chart representing a portion of the main control program used to control operation of the air conditioning system of FIG. **1**;

FIG. **5** is a graphical illustration of the temperature in one of the rooms as a function of time;

FIG. **6** is a simplified flow chart of an Initialize State Variables Procedure useful in controlling the air conditioning system of FIG. **1**;

FIG. **7** is a simplified flow chart of a Monitor and Store Values Procedure useful in controlling the air conditioning system of FIG. **1**;

FIG. **8** is a simplified flow chart of a Set State Variables Procedure useful in controlling the air conditioning system of FIG. **1**;

FIGS. **9**A and **9**B taken together represent a simplified flow chart of a Compressor Control Procedure useful in controlling the air conditioning system of FIG. **1**;

FIG. **10** is a simplified flow chart of a Damper Control Procedure useful in controlling the air conditioning system of FIG. **1**; and

FIG. **11** is a simplified flow chart of a Blower Control Procedure useful in controlling the air conditioning system of FIG. **1**.

DETAILED DESCRIPTION OF PREFERRED EMBODIMENTS

Reference is now made to FIG. **1** which is an illustration of a central air conditioning system constructed and operative in accordance with a preferred embodiment of the present invention.

The air conditioning system **10** of the present invention comprises a first compressor **12** in fluid communication with a first heat exchanger **14**. A first changeover valve **15** is interposed between the first compressor **12** and the first heat exchanger **14** to allow operation of the air conditioning system **10** for 'summer operation' and 'winter operation' as is known in the art. A third heat exchanger **16** is in fluid communication with the first heat exchanger **14** and a first expansion valve **18** is interposed between the first heat exchanger **14** and the third heat exchanger **16**. The third heat exchanger **16** is in turn in fluid communication with the first changeover valve **15**. The first changeover valve **15** is in turn in fluid connection with the first compressor **12**, thereby establishing a first refrigeration circuit.

The air conditioning system **10** also comprises a second compressor **22** in fluid communication with a second heat exchanger **24**. A second changeover valve **25** is interposed between the second compressor **22** and the second heat exchanger **24** to allow operation of the air conditioning system **10** for 'summer operation' and 'winter operation'. A fourth heat exchanger **26** is in fluid communication with the second heat exchanger **24** and a second expansion valve **28** is interposed between the second heat exchanger **24** and the fourth heat exchanger **26**. The fourth heat exchanger **26** is in turn in fluid communication with the second changeover valve **25**. The second changeover valve **25** is in turn in fluid connection with the second compressor **22**, thereby establishing a second refrigeration circuit.

The first heat exchanger **14** and the third heat exchanger **24** are mounted in a case **32** which is generally located in a region accessible to the ambient air. Also mounted in case **32** is an external fan motor **34** drivingly connected to an external fan **36**. As may be seen in FIG. **1**, the first heat exchanger **14** and the third heat exchanger **24** are disposed so that the air flow generated by the external fan **32** passes through the first heat exchanger **14** and the third heat exchanger **24**.

The first compressor **12**, the second compressor **22**, the first changeover valve **15** and the second changeover valve **25** are also generally mounted in the case **32**. The first expansion valve **18** and the second expansion valve **28** may also be mounted in the case **32** but the expansion valves are shown external to the case **32** in FIG. **1** for the sake of clarity.

A blower **40**, drivingly connected to a blower motor **42**, is disposed to direct a flow of air to be conditioned so that the air flow generated by the blower **40** passes through the fourth heat exchanger **26** and the third heat exchanger **16** and into a main air distribution duct **44**. The main duct **44** in turn distributes the now conditioned air **43** through a plurality of branch ducts **46** to a plurality of rooms **50**, **52** and **54** via variable dampers **56**, **58** and **60** respectively. Each of the variable dampers **56**, **58** and **60** is drivingly connected to a damper motor **62**, **64** and **66** respectively.

It is apparent that the blower **40** may also be placed in proximity to and downstream of the fourth heat exchanger **26** and the third heat exchanger **16**.

The embodiment of FIG. **1** is described in terms of three rooms **50**, **52** and **54**. It is be apparent to one skilled in the art that this is by way of example only and the number of rooms to be provided with conditioned air is not limiting. It is also apparent that if additional rooms are to be provided with conditioned air, additional ducts and variable dampers are provided to these rooms as well.

The air conditioning system **10** also comprises an air flow pressure sensor **110** which may be located at the entrance to the main duct **44**. The air flow pressure sensor **110** may be an NT. 2322-640-56272 manufactured by the Philips Corporation of Holland or any other sensor suitable for measuring the air pressure at the entrance to the main duct **44**. The air flow sensor **110** is operative to send a duct pressure signal to the control system **100** which is substantially proportional to the air pressure at the entrance to the main duct **44**.

Vertiv Ex. 1011
Vertiv v. Valtrus

A bypass duct **70** may be disposed near the downstream end of the third heat exchanger **16** to provide a flow path for the conditioned air from the main duct **44** and return it to an entrance region **72** located in proximity to the upstream end of the blower **40**. A bypass damper **74** which is drivingly connected to a bypass damper motor **76** is interposed in the bypass duct **70**. The bypass damper **74** is operative, in response to signals from the control system **100**, to return some or all of the conditioned air to the entrance region **72** if the pressure sensed by air flow pressure sensor **110** exceeds a value which may be in the region of 16 to 19 psi and is preferably about 17 psi.

Return air ducts may also be provided between the rooms **50**, **52** and **54** and the entrance region **72**. The return air ducts are not shown in FIG. **1**.

A control system **100**, which may be a conventional microprocessor based controller, is electrically connected to the first compressor **12** by a first compressor control wire **184**. The control system **100** is also electrically connected to the second compressor **22** by a second compressor control wire **186**.

The control system **100** is also electrically connected to the blower motor **42** by blower motor control wire **182** and to the external fan motor **34** by a fan control wire **180**.

The control system **100** is also electrically connected to the first changeover valve **15** by a first changeover valve control wire **188** and to the second changeover valve **25** by a second changeover valve control wire **190**.

The control system is also electrically connected to the damper motors **62**, **64** and **66** via damper motor control wires **101**, **103** and **105** respectively. The control system **100** may also be electrically connected to the bypass damper motor **76** via bypass damper motor control wire **107**.

The control system **100** is operative to activate the first compressor **12**, the second compressor **22**, the first changeover valve **15**, the second changeover valve **25**, the external fan motor **34**, the blower motor **42**, the damper motors **62**, **64** and **66** and the bypass damper motor **76** in response to input signals as will be described hereinbelow.

The control system **100** is also electrically connected to room temperature controllers **102**, **104** and **106** in each of the rooms **50**, **52** and **54** via room controller wires **150**, **152** and **154** respectively. The room temperature controllers **102**, **104** and **106** may also be electrically connected to a conventional motion sensor **103**, such as a conventional IR sensor for detecting movement in the rooms **50**, **52** and **54**, via motion sensor wire **149**. The motion sensor **103** is shown in FIG. **1** in room **50** but it is apparent that the motion sensor **103** may be installed in the other rooms as well. The motion sensor **103** is operative to provide a signal to the room controller **102** depending on the existence or absence of an individual in the room **50**.

The control system **100** is also electrically connected to the air flow pressure sensor **110** via air flow pressure wire **192**.

The control system **100** is also electrically connected to a duct temperature sensor **57** via duct temperature sensor wire **61**. The duct temperature sensor **57** may be placed in the main duct **44** in proximity to and downstream of the second heat exchanger **16**. The duct temperature sensor **57** is operative to send a signal to the control system **100** substantially proportional to the temperature of the air in the main duct **44**.

The control system **100** is also electrically connected to an entrance region temperature sensor **59** via an entrance region temperature sensor wire **63**. The entrance region temperature sensor **59** may be placed in the proximity to and downstream of the blower **40**. The entrance region temperature sensor **59** is operative to send a signal to the control system **100** substantially proportional to the temperature of the air immediately downstream of the blower **40**.

It is be apparent that the entrance region temperature sensor **59** measures the temperature of the air flow before it passes through the fourth heat exchanger **26** and the third heat exchanger **16** and that the duct temperature sensor **57** measures the temperature of the air flow after it has passed through the fourth heat exchanger **26** and the second heat exchanger **16**.

The control system **100** may also be electrically connected to an outside temperature sensor **112** via an outside temperature sensor wire **111**. The outside temperature sensor **112** may be located in any convenient location where it is exposed to the ambient air and is operative to send an outside temperature signal to control system **100** substantially proportional to the temperature of the ambient air.

The control system **100** may also be electrically connected to a first temperature sensor **114** via a first temperature sensor wire **115**. The first temperature sensor **114** may be located in proximity to the entrance of refrigerant into the first heat exchanger **14** and is operative to send a first heat exchanger temperature signal to the control system substantially proportional to the temperature of the refrigerant as it enters the first heat exchanger **14**.

The control system **100** may also be electrically connected to a second temperature sensor **116** via a second temperature sensor wire **117**. The second temperature sensor **116** may be located in proximity to the entrance of refrigerant into the second heat exchanger **24** and is operative to send a second heat exchanger temperature signal to the control system substantially proportional to the temperature of the refrigerant as it enters the second heat exchanger **24**.

The control system **100** may also be electrically connected to a third temperature sensor **118** via a third temperature sensor wire **119**. The third temperature sensor **118** may be located in proximity to the exit of refrigerant from the third heat exchanger **16** and is operative to send a third heat exchanger temperature signal to the control system substantially proportional to the temperature of the refrigerant as it leaves the third heat exchanger **16**.

The control system **100** may also be electrically connected to a fourth temperature sensor **120** via a fourth temperature sensor wire **119**. The fourth temperature sensor **120** may be located in proximity to the exit of refrigerant from the fourth heat exchanger **26** and is operative to send a fourth heat exchanger temperature signal to the control system substantially proportional to the temperature of the refrigerant as it leaves the fourth heat exchanger **16**.

It is understood that the reference to entrance and exit of refrigerant from the first, second, third and fourth heat exchangers pertains to operation of the air conditioning system **10** for providing cooling air during 'summer operation' and that the flow of refrigerant is reversed when the air conditioning system **10** is operative to provide heated air during 'winter operation'.

Reference is now made to FIG. **2** which is a schematic illustration of a room temperature controller **102** useful in the central air conditioning system of FIG. **1**. Room temperature controllers **104** and **106** are substantially identical to room controller **102** and reference is made to room controller **102** by way of example only.

Room temperature controller **102** comprises a first microprocessor **130** which may be a Motorola 6085 P9 micro-

processor or any other suitable microprocessor. Room temperature controller **102** also comprises a first control switch **138** operative to send an ON/Enter signal to the microprocessor **130** and a second control switch **140** operative to send an OFF signal to the microprocessor **130**. Room temperature controller **102** also comprises an increasing switch **134** and a decreasing switch **136**. Switches **134** and **136** are operative to send an increasing and a decreasing temperature signal respectively to the microprocessor **130**.

The increasing switch **134**, the decreasing switch **136**, the first and second control switches **138** and **140** are connected to input ports of the microprocessor **130** as is known in the art.

The first control switch **138**, the second control switch **140**, the increasing and decreasing switches **134** and **136** may also be operative to send programming signals to the microprocessor **130** as is known in the art.

Room temperature controller **102** also comprises a room temperature sensor **132**. Room temperature sensor **132** may be a conventional thermistor sensor such as model TRMF001A manufactured by Morate of Kyoto, Japan or any other suitable temperature sensing device. Room temperature sensor **132** is operative to send a temperature signal RoomHeat[50] to the first microprocessor **130** which is substantially proportional to the temperature in the room **50**.

The motion sensor wire **149** may also be connected to an input port of the first microprocessor **130**.

Electrically connected to output ports of microprocessor **130** is a first bi-color LED **142** and a second bi-color LED **144**. The first and second bi-color LED's are operative to display a red or green color in response to output signals from the first microprocessor **130**.

A triad of seven segment LED displays **146** are also electrically connected to output ports of the first microprocessor **130** as is know in the art. The seven segment LED's are operative, in response to signals from the first microprocessor **130**, to display information to the user, such information including the actual room temperature, the desired room temperature and various status signals. The seven segment LED's may also operative to display programming information as is well known in the art.

The room thermostat **102** is electrically connected to the +5 V power supply and to the ground of the control system **100**. The +5 V and ground connections are not shown in FIG. **2**. A room controller communications line **150** is electrically connected to the control system **100** and is operative to transmit information collected by the room controller **102** and provide this information to the control system **100**.

The first microprocessor **130** is operative to process information received from the room temperature sensor **132**, increasing switch **134**, decreasing switch **136**, the first and second control switches **138** and **140** and the motion sensor **103** and encode this information in a conventional pulse width modulated (PWM) room controller signal and to transmit this room controller signal to the control system **100** via room controller communications line **150**. Pulse Width Modulated communications techniques are well known in the art and are described in the data sheet LXT **305** published by the Level One Communication Corporation of Folsom, Calif., the contents of which are hereby incorporated by reference.

It is appreciated that room controllers **104** and **106** are operative to send a similar PWM encoded signal regarding conditions in the room **52** and **54** to the control system **100**, including the temperature signals RoomHeat[**52**] and RoomHeat[**54**].

Reference is now made to FIG. **3** which is a schematic illustration of the control system **100** useful in the central air conditioning system of FIG. **1**. The control system **100** comprises a second microprocessor **160** which may be a Motorola 6805 B16 microprocessor or any other suitable microprocessor.

The room controllers **102**, **104** and **106** are electrically connected to input ports of the second microprocessor **160** via room controller communications lines **150**, **152** and **154** respectively. The second microprocessor **160** is operative to decode the pulse width modulated signals sent by the room controllers **102**, **104** and **106** by conventional PWM decoding techniques as described in the data sheet LXT **305**, referenced hereinabove.

The second microprocessor **160** is also operative to decode the increasing signals and the decreasing signals received from each of the room controllers **102**, **104** and **106**, and to accumulate the increasing and decreasing signals in memory locations RoomDspHeat[**50**], RoomDspHeat[**52**] and RoomDspHeat[**54**].

It is apparent to one skilled in the art that the increasing signals and the decreasing signals may be accumulated in the first microprocessor **130** and interpreted as the desired temperature in each of the rooms **50**, **52** and **54**. It is also be apparent to one skilled in the art that the first microprocessor is operative to transmit the desired temperature to the control system **100**.

The second microprocessor **160** is also operative to decode the temperature signals received from the room controllers **102**, **104** and **106** and to store these values in memory locations RoomHeat[**50**], RoomHeat[**52**] and RoomHeat[**54**].

It is apparent to one skilled in the art that applying names to locations in memory that are indicative of the contents of the memory location is well known. Thus for example, the memory location identified by RoomHeat [**50**] contains a numerical value which is substantially equal to the temperature of room **50**.

It is appreciated that the memory locations RoomsDispHeat[**50**], RoomsDispHeat[**52**] and RoomsDispHeat[**54**] contain values which represent the desired temperature of the rooms **50**, **52** and **54**. It is also appreciated that the memory locations RoomHeal[**50**], RoomHeat[**52**] and RoomHeat[**54**] represent the actual temperature of room **50**, **52** and **54**, respectively.

In addition to the above devices connected to input ports of the second microprocessor **160**, the first temperature sensor **114** is connected to an analog input port of the second microprocessor **160** via first temperature sensor wire **115**. The second temperature sensor **116** is also connected to an analog input port of the second microprocessor **160** via the second temperature sensor wire **117**. The third temperature sensor **118** is also connected to an analog input port of the second microprocessor **160** via the third temperature sensor wire **119**. The fourth temperature sensor **120** is also connected to an analog input port of the second microprocessor **160** via the fourth temperature sensor wire **121**. The outside temperature sensor **112** is also connected to an analog input port of the second microprocessor **160** via the outside temperature sensor wire **111**. The entrance region temperature sensor **59** is also connected to an analog input port of the second microprocessor **160** via the entrance region temperature sensor wire **63**. The duct temperature sensor **57** is also connected to an analog input port of the second microprocessor **160** via the duct temperature sensor wire **61**. The air flow pressure sensor **110** is also connected to an analog input

port of the second microprocessor **160** via the air flow pressure sensor wire **192**.

The second microprocessor **160** is operative to convert the analog signals received from the first temperature sensor **114**, the second temperature sensor **116**, the third temperature sensor **118**, the fourth temperature sensor **120**, the outside temperature sensor **112**, the duct temperature sensor **57**, the entrance region temperature sensor **59** and the air flow pressure sensor **110** into digital values suitable for digital processing by the second microprocessor **160**.

The control system **100** also comprises a data bus **164** electrically connected to output ports of the second microprocessor **160** and to a plurality of output circuits **162**. Each output circuit **162** is also electrically connected to a chip select wire **166** which is in turn electrically connected to an output port of the second microprocessor **160**. Each output circuit **162** is also electrically connected to a pair of bi-polar damper motor controllers **168**. Each damper motor controller **168** is also electrically connected to a damper control motor. As seen in FIG. **3**, the damper motor **62** is electrically connected to one of the bi-polar damper motor controllers **168** via the damper control wire **101**. Similarly, the damper motors **64**, **66** and the bypass damper motor **76** are electrically connected to one of the bi-polar damper motor controllers **168** via the damper control wires **103**, **105** and the bypass damper control wire **107**, respectively.

The second microprocessor **160** is operative to selectively open or close the dampers **56**, **58**, **60** and the bypass damper **74** via the damper motors **62**, **64**, **66** and the bypass damper motor **76**, the damper control wires **101**, **103**, **105** and the bypass damper motor control wire **107**, the bi-polar damper motor controllers **168** and the output circuits **162** in response to data generated by the second microprocessor **160** and placed on the data bus **164** and by data generated by the second microprocessor **160** and placed on the chip select wires **166**.

It is appreciated that the method of controlling the dampers **56**, **58**, **60** and the bypass damper **74** are based on conventional techniques well known in the art. It is also appreciated that the control system **100** may be operative to control any number of dampers.

The control system **100** also comprises a plurality of opto-couplers **172** each connected to an output port of the second microprocessor **160**. The opto-couplers **172** may be conventional opto-couplers such as the Motorola MOC 3041 or any other suitable opto-coupler.

The control system **100** also comprises a pair of conventional triacs **174** each of which is electrically connected to one of the opto-couplers **172**. As seen in FIG. **3**, one of the triacs **174** is also electrically connected to the external fan motor **34** via external fan motor wire **180** and the second of the pair of triacs **174** is electrically connected to the blower motor **42** via blower motor wire **182**.

The control system **100** is operative to control speed of rotation of the external fan motor **34** and the blower motor **42** in response to signals generated by the second microprocessor **160** via the opto-couplers **172**, the triacs **174**, the external fan motor wire **180** and the blower motor wire **182**.

The control system **100** also comprises a first pair of conventional contactors **176** each of which is electrically connected to one of the opto-couplers **172**. As seen in FIG. **3**, one of the first pair of contactors **176** is also electrically connected to the first compressor **12** via the first compressor control wire **184** and the second of the first pair of contactors **176** is electrically connected to the second compressor **22** via the second compressor wire **186**.

The control system **100** is operative to control the ON or OFF state of the first compressor **12** and the second compressor **22** in response to signals generated by the second microprocessor **160** via the opto-couplers **172**, the contactors **176**, the first compressor control wire **184** and the second compressor control wire **186**.

The control system **100** also comprises a second pair of conventional contactors **178** each of which is electrically connected to one of the opto-couplers **172**. As seen in FIG. **3**, one of the second pair of contactors **176** is also electrically connected to the first changeover valve **15** via the first change control wire **188** and the second of the second pair of contactors **178** is electrically connected to the second changeover valve **25** via the second changeover valve **190**.

The control system **100** is operative to control the state of the first changeover valve **15** and the second changeover valve **25** in response to signals generated by the second microprocessor **160** via the opto-couplers **172**, the second pair of contactors **178**, the first changeover valve control wire **188** and the second changeover valve control wire **190**.

Control system **100** also comprises a serial port **194** which is operative to provide serial communications between the second microcomputer **160** and an external computer. The serial port **194** may also be electrically connected to a modem (not shown in FIG. **3**) for remote communications to an external computer. Serial output port **194** may operate according to a standard serial communication protocol such as RS-**232** or any other suitable serial communications protocol.

The second microprocessor **160** is operative to receive control variables used in controlling operation of the air conditioning system **10** from the serial port **194** and to store these control variables in memory as is well known in the art.

Alternatively or in addition, the second microprocessor **160** may also be operative to store control variables generated by the room controllers **102**, **104** and **106** in memory as is well known in the art.

The following control variables used to control operation of the air conditioning system **10** of FIG. **1** are stored in non-volatile memory of the second microprocessor **160**:

RoomCmpVol[**50**] represents the thermal load of room **50** and includes the size, exposure, number of occupants, thermal properties of the walls, ceiling and floor as well as other factors normally used to determine the thermal load of room **50**. Similarly, RoomCmpVol[**52**] and RoomCmpVol[**54**] represents the thermal load of rooms **52** and **54** respectively.

The thermal loads of the rooms are normalized on a scale of 0 to 20. A value of 0 means that the room has no thermal load while a value of 20 means that the room has the highest thermal load. It is appreciated that small rooms with a small number of occupants is assigned low values of RoomCmpVol and large rooms with a large number of occupants is assigned large values of RoomCmpVol.

RoomVol[**50**] represents the air flow requirement of room **50** and includes the size, number of occupants and air leakage as well as other factors normally used to determine the air flow requirement of room **50**. Similarly, RoomVol [**52**] and RoomVol[**54**] represent the air flow requirement of rooms **52** and **54** respectively.

The air flow requirements of the rooms are normalized on a scale of 0 to 20. A value of 0 means that the room has no air flow requirement while a value of 20 means that the room has the highest air flow requirement. It is appreciated that small rooms with a small number of occupants is assigned

low values of Room Vol and large rooms with a large number of occupants is assigned large values of RoomVol.

MV1 represents a low compressor reference value used to determine if the first compressor **12** is turned ON and second compressor **22** is turned OFF. MV2 represents a high compressor reference value used to determine if both the first compressor **12** and the second compressor **22** are turned ON.

SlowFanVol represents a low blower reference value used to determine if the rotational speed of blower **40** is at a low blower speed. MidFanVol represents an intermediate blower reference value used to determine if the rotational speed of the blower **40** is at an intermediate blower speed.

DT represents a temperature hysteresis value for controlling the temperature in each of the rooms **50**, **52** and **54** and is may be in the range of 1° C. to about 4° C. and is preferably about 2° C. Thus, if the desired temperature in a room is 22° C., and DT has a preferred value of 2° C., the room temperature is allowed to vary between 21° C. and 23° C., as described hereinbelow.

THi represents a reference value for the lowest useable temperature of the refrigerant that enters the third heat exchanger **16** as determined by the third temperature signal. THi may be in the range of 35° C. to about 60° C. and is preferably about 50° C. The control system **100** is operative to stop operation of the blower motor **42** when the air conditioning system **10** is first turned on until the temperature of the refrigerant as sensed by the third temperature signal reaches THi, thereby preventing air that has not been heated from entering the rooms.

EPPwrtM represents the minimum hold time before the status of either the first compressor **12** or the second compressor **22** is changed. Thus, for example, if the first compressor **12** has just been turned ON, it remains ON for at least EPPwrtM seconds, no matter what changes may occur in the thermal load of the air conditioning system **10**. EPPwrtM may be in the range from 15 seconds to about 120 seconds and is preferably about 30 seconds.

The second microprocessor **160** is also operative to calculate and store the following variables in memory:

CMPVol represents the total thermal load of all the rooms and is calculated according to

$$CMPVol = \sum_{i=50,52,54} RoomCmpVol[i] * f(i)$$

The function f(i) has the value of 0 or 1 and is described hereinbelow with reference to FIG. **9**.

DamperStalus[**50**] represents the fraction opening of the damper **56**. Thus, a value of 0 for DamperStatus[**50**] indicates that the damper **56** is closed and no flow of conditioned air enters room **50**. A value of 1 for DamperStatus[**50**] indicates that the damper **56** is fully open thereby allowing a maximum flow of conditioned air into room **50**.

Similarly, DamperStatus[**52**] represents the fraction opening of the damper **58** which controls the low of conditioned air into room **52** and DamperStatus[**54**] represents the fraction opening of the damper **60** which controls the flow of conditioned air into room **54**.

RoomVolume represents the total air flow requirement of all the rooms and is calculated according to

$$RoomVolume = \sum_{i=50,52,54} RoomVol[i]DamperStatus[i]$$

The control system **100** is operative to turn the first compressor **12** OFF and the second compressor **22** OFF if

CMPVol=0

The control system **100** is also operative to turn the first compressor **12** ON and the second compressor **22** OFF if

0<CMPVol≦MV1

The control system **100** is also operative to turn the first compressor **12** OFF and the second compressor **22** ON if

MV1<CMPVol≦MV2

The control system **100** is also operative to turn the first compressor **12** ON and the second compressor **22** ON if

CMPVol>MV2

It is apparent that the control system **100** is operative to turn both compressors off when the thermal load of all the rooms is zero. It is also apparent that the control system **100** is operative to turn on the first compressor **12** when the total thermal load of all the rooms is greater than zero but less than the low compressor reference value MV1. It is also apparent that the control system **100** is operative to turn the second compressor **22** ON when the total thermal load is between the low compressor reference value MV1 and the high compressor reference value MV2. It is also apparent that the control system **100** is operative to turn on both the first compressor **12** and the second compressor **22** when the total thermal load of all the rooms is

It is apparent to one skilled in the art that the electrical energy consumed by the air conditioning system **10** is substantially minimized by matching operation of the first compressor **12** and the second compressor **22** to the total thermal load of all the rooms.

The control system **100** is also operative to turn the blower motor **42** OFF if

RoomVolume=0

The control system **100** is also operative to turn the blower motor **42** at a low blower speed if

0<RoomVolume≦SlowFanVol

The low blower speed may be in the range of about 55% to 75% of the rated blower speed and is preferably about 65% of the rated blower speed.

The control system **100** is also operative to turn the blower motor **42** at an intermediate blower speed if

SlowFatiVol<RoomVolume≦MidFanVol

The intermediate blower speed may be in the range of 76% to 85% of the rated blower speed and is preferably about 80% of the rated blower speed.

The control system **100** is also operative to turn the blower motor **42** at a high blower speed if

MidFanVol<Room Volume

The high blower speed of blower motor **42** is generally equal to the maximum rated speed of the blower motor **34**.

The maximum rated speed of the blower motor **34** depends on the type of fan **36** used and may be in the region of about 1000 rpm to 1500 rpm and is preferably about 1150 rpm.

It is apparent that the control system **100** is operative to turn blower motor **42** OFF if the total air flow requirement of all the rooms is zero. It is also apparent that the control system **100** is operative to rotate the blow motor at the low blower speed if the total air flow requirement of all the rooms is greater than zero but less than the low blower reference value SlowFanVol. It is also apparent that the control system **100** is operative to rotate the blower motor **42** at the intermediate blower speed if the total air flow requirement of all the rooms is greater than the low blower reference value SlowFanVol and less than the intermediate blower reference value MidFanVol. It is also apparent that the control system **100** is operative to rotate the blower motor **42** at the high blower speed if the total air flow requirement of all the rooms is greater than the intermediate blower reference value MidFanVol.

The control system **100** is also operative to control the fraction opening of the dampers **56**, **58** and **60** and to store the value of the fraction opening of each of the dampers **56**, **58** and **60** in memory locations DamperStatus[**50**], DamperStatus[**52**] and DamperStatus[**54**] corresponding to each of the rooms **50**, **52** and **54** respectively.

Operation of the control system **100** for controlling the fraction opening of the damper, DamperStatus[i], for each of the rooms is now described in terms of heating for 'winter operation'. It is apparent to one normally skilled in the art that the teachings of the present invention are equally applicable to cooling in 'summer operation'.

The fraction opening of each of the dampers **56**, **58** and **60** is given by

$$DamperStatus[i] = \frac{[RoomDspHeat[i] + DT/2] - RoomHeat[i]}{DT}$$

wherein the DamperStatus[i] is limited to values between 0 and 1 where 0 indicates that the damper is completely closed and 1 indicates that the damper is fully open.

For example, if the temperature hysteresis is DT=2° C. and the desired temperature of room **50** is RoomDspHeat [**50**]=of 22° C. and the measured temperature of room **50** is RoomHeat[**50**]=20° C. then DamperStatus[**50**]=1. It is apparent therefore that if the measured room temperature in room **50** is less than the desired temperature by more than DT/2 degrees, then the damper **56** is fully open, thereby allowing conditioned air to enter the room **50**, thereby raising the temperature of the air in room **50**.

When the temperature of the air in room **50** reaches the desired value of RoomDspHeat[**50**]=22° C., then DamperStalus[**50**] is given by

$$DamperStatus[50] = \frac{[22 + 2/2] - 22}{2} = \frac{1}{2}$$

in which case the control system **100** is operative to open the damper **56** to substantially 50% of its full opening, thereby decreasing the flow of conditioned air into room **50**.

When the temperature of the air in room **50** reaches the upper limit of the hysteresis range, that is RoomDspHeat [**50**]+DT/2=23° C., then

$$DamperStatus[50] = \frac{[22 + 2/2] - 23}{2} = 0$$

in which case control system **100** is operative to close the damper **56**, thereby preventing additional conditioned air from entering room **50**.

The control system **100** is also operative to adjust the speed of the external fan motor **34** in response to the third temperature signal received from the third heat exchanger **16** and the fourth temperature signal received from the fourth heat exchanger **26**, to maintain the temperature range of the refrigerant entering the third heat exchanger **16** and the fourth heat exchanger **26** substantially within the range of 50° C. to 55° C. The method of controlling the temperature of the refrigerant by adjusting the speed of the external fan is well known in the art.

It is apparent that in the case of 'summer operation', the speed of the external fan motor **34** is adjusted in response to the first temperature signal received from the first heat exchanger **14** and the second temperature signal received from the second heat exchanger **24**.

RoomState[i] represents the operational status of room i. RoomState[i] is assigned the following values:

$$\begin{aligned} RoomState[i] &= 0 \text{ if } Roomi \text{ is not currently being heated or} \\ &\quad \text{if there is no thermostat in } Roomi \\ &= 1 \text{ if } Roomi \text{ is being heated} \\ &= 2 \text{ if } Roomi \text{ has been set to OFF} \end{aligned}$$

The control system **100** is also operative to store the value of RoomState[i] for each of the rooms in response to the measured and desired temperature in the room i and the status of the ON/Enter switch **138** and the OFF switch **140** of the room controller for the room i.

Thus for example, if the measured temperature of room **50**, RoomHeat[**50**] is below the desired temperature RoomDspHeat[**50**] minus the hysteresis value DT/2, control system **100** is operative to set RoomState[**50**] to 1, indicating that room **50** is to receive conditioned air. When the measured temperature of room **50** reaches or exceeds the desired temperature RoomDspHeat[**50**] plus the hysteresis value DT/2, control system **100** is operative to set RoomState[**50**] to 0, indicating that delivery of conditioned air to room **50** is to stop. RoomState[**50**] remains 0 until the temperature of room **50** falls to RoomDspHeat[**50**] minus DT/2, whence the control system **100** is operative to set RoomState[**50**] to 1 again.

It is apparent to one skilled in the art that the control system **100** is operative to maintain the temperature of each of the rooms i within a band of DT degress around the desired temperature of each room.

Also by way of example, if the OFF switch **140** has been activated in room **52**, the control system **100** is operative to set RoomState[**52**]=2, indicating that room **52** is not to receive any conditioned air.

The control system **100** is also operative to decode and store the first temperature signal from the first temperature sensor **114** in memory location OutUHeat.

The control system **100** is also operative to decode and store the second temperature signal from the second temperature sensor **116** in memory location OutUHeatB.

The control system **100** is also operative to decode and store the third temperature signal from the third temperature sensor **118** in memory location InFanHeat.

The control system **100** is also operative to decode and store the fourth temperature signal from the fourth temperature sensor **120** in memory location InFanHeatB.

The control system **100** is also operative to decode and store the outside temperature signal from the outside temperature sensor **112** in memory location OutHeat.

The control system **100** is also operative to determine the desired ON or OFF state of the first compressor **12** and store the first compressor state in the variable OutUnitState. The variable OutUnitState may have one of the following values:

$$\begin{aligned} OutUnitState &= 0 \text{ if first compressor 12 is OFF} \\ &= 1 \text{ if first compressor 12 is in a WAIT state between OFF and ON} \\ &= 2 \text{ if first compressor 12 is operating} \end{aligned}$$

The control system **100** is also operative to determine the desired ON or OFF state of the second compressor **22** and store the second compressor state in the variable OutUnitStateB. The variable OutUnitStateB may have one of the following values:

$$\begin{aligned} OutUnitStateB &= 0 \text{ if second compressor 12 is OFF} \\ &= 1 \text{ if second compressor 12 is in a WAIT state between OFF and ON} \\ &= 2 \text{ if second compressor 12 is operating} \end{aligned}$$

It is appreciated that the term 'store in memory' and 'store a variable' are substantially the same.

Reference is now made to FIG. **4** which is a simplified flow chart representing a portion of the main control program used to control operation of the air conditioning system of FIG. **1**.

At step **200**, the air conditioning system has been turned ON and in step **202** the state variables are initialized, and the control system **100** enters the main control loop at step **204**. At step **204**, the signals from all of the sensors are read and the values stored in appropriate locations in memory. Similarly, the PWM encoded signals from the room controllers **102**, **104** and **116** are decoded and stored in appropriate locations in memory.

At step **206** the variable RoomState[i] is determined for each of the rooms **50**, **52** and **54**.

At step **208**, the Compressor Control Procedure is called. Depending on the total thermal load of the system and the various state variables, the Compressor Control procedure is operative to turn both compressors OFF, to turn first compressor **12** ON, to turn the second compressor **22** ON or to turn both the first compressor **12** and the second compressor **22** OFF, thereby adjusting the total thermal output of the air conditioning system **10**.

At step **210**, the Damper Control Procedure is called. Depending on the state variables for each room, the Damper Control Procedure is operative to increase or decrease the fraction open for the dampers in each of the rooms, thereby increasing or decreasing the flow of conditioned air to each of the rooms **50**, **52** and **54**.

At step **212**, the Bypass Damper procedure is called. Depending on the pressure in the main duct **44**, the Bypass Damper Procedure is operative to increase or decrease the fraction opening of the bypass damper **74**, thereby maintaining a substantially constant pressure in the main duct **44**.

At step **214**, the Blower Control Procedure is called. Depending on the total requirement for air flow, the Blower Control Procedure is operative to turn the blower motor **42** OFF, rotate the blower motor **42** at the low blower speed, rotate the blower motor **42** at the intermediate blower speed or rotate the blower motor **42** at the high blower speed.

At step **216**, the External Fan Control Procedure is called. Depending on the temperature of the refrigerant, the External Fan Control Procedure is operative to increase or decrease the speed of the external fan motor **34** so as to maintain a substantially constant temperature of the refrigerant as it enters the first heat exchanger **14** and the second heat exchanger **24**.

At step **218**, the room temperature controllers **102**, **104** and **106** are queried to determine if the system OFF switch **140** for any of the room controllers has been activated. If the answer is YES, the Exit Procedure, step **220**, is called. If the answer is NO, then the control program returns to step **204**, thereby starting the main control loop again.

Reference is also made to FIG. **5** which is a graphical illustration of the temperature variation in room **50** as a function of time, as described hereinbelow. The initial state of room **50** is at point **300**.

Reference is now also made to FIG. **6** which is a simplified flow chart of the Initialize State Variables Procedure useful in controlling the air conditioning system of FIG. **1**.

Step **340** represents the entry point to the Initialize State Variables Procedure. At this point, the control system **100** is operative to determine that the air conditioning system **10** must operate in heating for 'winter operation'. The logic used to determine whether the air conditioning system **10** is to operate in cooling for 'summer operation'and for heating in 'winter operation' is well known in the art and is not shown in the Initialize State Variables Procedure.

At step **342** the first and second compressor state variables OutUnitState and OutUnitSiateB are set to 0.

At step **344**, the control system **100** is operative to decode the temperatures in rooms **50**, **52** and **54** and to store these values in variables RoomHeat[i]. The control system **100** is also operative to read the temperature of the outside air and store this value in OutHeat.

At step **346**, control system **100** is operative to turn the first changeover valve **15** to the 'winter' position.

At step **348**, control system **100** is operative to turn the second changeover valve **25** to the 'winter' position.

At step **350**, the control system **100** is operative to turn the first compressor **12** ON and to set the first compressor state variable OutUnitState to 2, indicating that the first compressor **12** is operating to pump heat from the first heat exchanger **14** to the third heat exchanger **16**, thereby raising the temperature of the refrigerant as it enters the third heat exchanger **16**.

At step **352**, the control system **100** is operative to turn the second compressor **22** ON and to set the second compressor state variable OutUnitStateB to 2., indicating that the second compressor **22** is operating to pump heat from the second heat exchanger **24** to the fourth heat exchanger **26**, thereby raising the temperature of the refrigerant as it enters the fourth heat exchanger **26**.

At step **354**, the control system **100** is operative to read the third temperature signal from the third temperature sensor **118** located at the entrance to the third heat exchanger **16** and store this value in the variable InFanHeat. The control system **100** is also operative to read the fourth temperature signal from the fourth temperature sensor **120** located at the entrance to the fourth **26** heat exchanger **16** and store this value in the variable InFanHeatB.

At step **356**, the temperature variables InFanHeat and InFanHeatB are compared with the reference temperature

value THi. If InFanHeat and InFanHeatB are both less than THi, then the third heat exchanger **16** and the fourth heat exchanger **26** have not yet reached an appropriate operating point and the control system **100** is operative to return to step **354**.

If InFanHeat and InFanHeatB are both greater than THi, then control system **100** is operative to pass control to step **358**.

It is apparent that the control system **100** remains in the loop comprising steps **354** and steps **356** until the second and third heat exchangers reach the correct operating temperature as determined by THi.

At step **358**, the control system **100** is operative to set the DamperStatus[i] variable for the dampers **56**, **58** and **60** in each of the rooms **50**, **52** and **54** and for the bypass damper **74**. Since the air conditioning system **10** always starts with all of the dampers fully closed, the DamperStatus[i] variable are all set to 0. Control system **100** is also operative to set the RoomStatus[i] for each of the rooms **50**, **52**, **54** to **0**, indicating that that rooms are not at present receiving any conditioned air.

At step **360**, control returns to the main control program of FIG. **4**.

Reference is now also made to FIG. **7** which is a simplified flow chart of the Monitor and Store Values Procedure useful in controlling the air conditioning system of FIG. **1**.

Step **380** is the entry point into the Monitor and Store Values Procedure. At step **382**, the control system **100** is operative to sample the data from the room temperature controllers **102**, **104** and **106** and store the desired temperature of each room in RoomHeat[i]. Control system **100** is also operative to read the ambient temperature and from outside temperature sensor **112** and store the value in the variable OutHeat.

At step **384**, the control system **100** is operative to sample the data from the room temperature controllers **102**, **104** and **106** and store the desired temperature in each room in the variable RoomDspHeat[i].

At step **386**, the control system **100** is operative to sample the data from the room controllers **102**, **104** and **106** and store the status of the OFF switch **140** in each of the room rooms **50**, **52** and **54**. If the OFF switch **140** for room i has been activated, the variable RoomState[i] is set equal to 2, indicating that the room has been turned OFF and is not to receive any conditioned air.

At step **388**, the control returns to the main control program of FIG. **4**.

Reference is now also made to FIG. **8** which is a simplified flow chart of the Set State Variables Procedure useful in controlling the air conditioning system of FIG. **1**.

Step **400** is the entry point into the Set State Variables Procedure. The Set State Variables Procedure is executed for each of the rooms **50**, **52** and **54**. At state **402**, the value of RoomState[i] is determined. If RoomState[i]=2, then room i has been turned off and no conditioned air is to be supplied to that room and control is transferred to step **414**, the exit point of the Set State Variables Procedure.

If RoomState[i] is not equal to 2, then room i may receive conditioned air and control is transferred to step **404**.

At step **404**, if RoomState[i]=1, then conditioned air is already being provided to room i and control is transferred to step **406**. At step **406**, the measured room temperature RoomHeat[i] is compared with the desired temperature of room i, RoomDspHeat[i], plus the hysteresis DT/2. If the measured temperature of room i, RoomHeat[i], is greater than RoomDspHeat[i]+DT/2, then room i has reached the high value of the hysteresis range and the flow of conditioned air to room i may be stopped. Control is transferred to step **410** and RoomState[i] is set to 0. Control is then transferred to step **414**, the exit point of the Set State Variables Procedure.

If the answer to step **406** is NO, then room i has not yet reached the desired temperature and control is transferred to step **414**, the exit point of the Set State Variables Procedure. It is apparent that in this case, RoomState[i] remains equal to 1.

Returning now to step **404**, if RoomState[i] is not equal to 1, control is transferred to step **408**. The measured temperature of room i, RoomHeat[i], is compared with the desired temperature of room i, RoomDspHeat[i], minus the hysteresis DT/2. If the measured temperature of room i, RoomHeat [i], is less than RoomDspHeat[i]−DT/2, then room i has fallen to the low value of the hysteresis range. Control is then transferred to step **412** and RoomState[i] is set to 1.

If the answer to step **408** is NO, then the temperature of room i has not reached the low level of the hysteresis range. Control is transferred to step **414**, the exist point of the Set State Variables Procedure. It is apparent that in this case, RoomState[i] remains set to 0.

Reference is now also made to FIGS. **9**A and **9**B taken together represent a simplified flow chart of a Compressor Control Procedure useful in controlling the air conditioning system of FIG. **1**. The entry point of the Compressor Control Procedure is at step **420**. At step **422**, the variable CMPVol is set to 0 and the room counter i is set to 50.

At step **424**, a test is made on RoomStatus[i]. If RoomStatus[i] is 0 or 2, then room i does not require any conditioned air and the function f(i) is set to 0 at step **426**. If RoomStatus[i] is not 0 or 2, then room i does require conditioned air and the function f(i) is set to 1 at step **430**

At step **428**, the value of CMPVol is summed. At step **432**, the room counter i is incremented and at step **434**, a test is made to see if all CMPVol has been summed for all the rooms.

It is apparent that in steps **422** to **434**, the total room thermal load CMPVol is calculated.

At step **436**, a test is made to see if the first compressor **12** has changed its operating state in the last EEPwrtM seconds. If the first compressor has been turned ON or OFF in the last EEPwrtM seconds, then control transfers to step **452**. It is apparent that step **436** prevents rapid ON or OFF cycling of the first compressor **12**.

Returning now to step **436**, if the operating state of the first compressor **12** has not been changed in the last EEPwrtM seconds, control is transferred to step **438**. If the total room thermal load is 0, the OutUnitState is set to 0 at step **440**, indicating that the first compressor **12** is to be turned OFF.

Returning now to step **438**, if the total room thermal load is greater than 0, control is transferred to step **442**. At step **442**, if the total thermal load CMPVol is less than MV1, then the total thermal load of all the rooms is small and OutUnitState is set to 2 at step **444**, indicating that the first compressor **12** is to be turned ON.

Returning now to step **442**, if the total room thermal load is greater than MV1, control is transferred to step **446**. At step **446**, if the total thermal load is greater than MV2, then the total thermal load of all the rooms is high and OutUnitState is set to 2 at step **448**.

Returning now to step **446**, if the total thermal load of all the rooms is less than MV2, then the total thermal load of all the rooms is at an intermediate value and OutUnitState is set to 0 at step **450**.

After OutUnitState has been set at either of the steps **440**, **444**, **448** or **450**, control is transferred to step **452**, which represents a continuation step.

At step **454**, a test is made to see if the second compressor **22** has changed its operating state in the last EEPwrtM seconds. If the second compressor **22** has been turned ON or OFF in the last EEPwrtM seconds, then control transfers to step **466**. It is apparent that step **454** prevents rapid ON or OFF cycling of the second compressor **12**.

Returning now to step **454**, if the operating state of the second compressor **22** has not been changed in the last EEPwrtM seconds, control is transferred to step **456**. If the total room thermal load is 0, the OutUnitStateB is set to 0 at step **448**, indicating that the second compressor **22** is to be turned OFF.

Returning now to step **456**, if the total room thermal load is greater than 0, control is transferred to step **460**. At step **460**, if the total thermal load CMPVol is greater than MV1, then the total thermal load of all the rooms is at an intermediate value or a high value and OutUnitStateB set to 2 at step **462**, indicating that the second compressor **22** is to be turned ON.

Returning now to step **460**, if the total room thermal load is less than MV1, then the total thermal load of all the rooms is at a low value and OutUnitStateB is set to 0 at state **464**.

At step **466**, a test is made on OutUnitState. If OutUnitState=2, the control system **100** is operative to turn the first compressor **12** ON at step **468**. If OutUnitState=0, then control system **100** is operative to turn the first compressor **12** OFF at step **469**.

At step **470**, a test is made on OutUnitStateB. If OutUnitStateB=2, the control system **100** is operative to turn the second compressor **22** ON at step **472**. If OutUnitStateB=0, then control system **100** is operative to turn the second compressor **22** OFF at step **473**.

It is apparent that the Compressor Control Procedure is operative to turn the first compressor **12** ON if the total thermal load of all the rooms is low. It is also apparent that the Compressor Control Procedure is operative to turn the second compressor **22** ON if the total thermal load of all the rooms is at an intermediate value. It is also apparent that the Compressor Control Procedure is operative to turn both the first compressor **12** and the second compressor **22** ON if the total thermal load of all the rooms is at a high value.

After the operating state of the first compressor **12** and the second compressor **22** have been set, control is transferred to step **474**, which is the exit point of the Compressor Control Procedure.

Reference is now made to FIG. **10** which is a simplified flow chart of a Damper Control Procedure useful in controlling the air conditioning system of FIG. **1**. The entry point into the Damper Control Procedure is at step **480**.

At step **482**, the room counter i is set equal to **50**. At step **484**, the required opening of the damper for room i is calculated in terms of the measured room temperature RoomHeat[i], the desired temperature of room i, RoomDspHeat[i] and the hysteresis value DT as described hereinabove.

At step **485**, the value of the DamperStatus[i] is limited to the range from 0 to 1. Thus, if the result of the calculation of step **484** is less than 0, then DamperStatus[i] is set to 0. Similarly, if the result of the calculation of step **484** is greater than 1, then DamperStatus[i] is set to 1

At step **486**, the control system **100** is operative to adjust the fraction opening of the damper for room i according to the just calculated value of DamperStalus[i].

At step **490**, the room counter i is incremented and at step **492**, a test is made to determine if all of the rooms have been covered. If all the rooms have not been covered, control returns to step **484** where the damper for the next room is adjusted.

If all of the rooms have been covered, control transfers to step **494** which is the exit point of the Damper Control Procedure.

Reference is now made to FIG. **11** which is a simplified flow chart of a Blower Control Procedure useful in controlling the air conditioning system of FIG. **1**. The entry point into the Blower Control Procedure is at step **500**. In steps **502** to **508**, the total air flow requirement for all of the rooms, RoomVolume, is calculated by summing up the individual air flow requirement of all of the rooms.

In step **510**, a test is made to determine if the total air flow required is 0. If it is, the control system is operative to turn the blower motor **42** OFF at step **512**, in which case control is passed to step **524**, the exit point of the Blower Control Procedure.

If the total air flow required is greater than 0 but less than or equal to SlowFanVol, control is transferred to step **516** wherein control system **100** is operative to set the speed of the blower motor **42** to the low blower speed. Control is passed to step **524**, the exit point of the Blower Control Procedure.

If the total air flow required is greater than SlowFanVol but less than or equal to MidFanVol, control is transferred to step **520** wherein control system **100** is operative to set the speed of the blower motor **42** to the high blower speed. Control is passed to step **524**, the exit point of the Blower Control Procedure.

It is apparent that the Blow Control Procedure is operative to adjust the speed of the blower motor **42** in response to the total air flow requirement of all of the rooms.

It is also apparent that the Blow Control Procedure may be operative to adjust the speed of the blower motor **42** in a continuous manner.

It is also apparent that the air conditioning system **10** of FIG. **1** may also be implemented with a single compressor.

Operation of the central air conditioning system is now be described for 'winter operation'. In the following description, it is assumed, by way of example, that the initial temperature of each room is less than 20° C. and that the desired temperature of each room i, RoornDspHeat[i], is 22° C. The air conditioning system is OFF and the ON/Enter switch **138** has been activated on room thermostat **102** of room **50**. It is also assumed that the temperature hysteresis DT is set a 2° C. Referring once again to FIG. **5**, the starting point of operation is at point **300**.

Because the temperatures of all the rooms are below 21° C., the total thermal requirement of all of the rooms is at the highest value and both the first compressor **12** and the second compressor **22** are turned ON.

After the first and second compressors reach the desired operating conditions, the dampers motors **62**, **64** and **66** are set to the full open position to allow the maximum amount of conditioned air into each of the rooms. Since all of the dampers **56**, **58** and **60** are fully open, the total air flow requirement is at a high value and the speed of the blower motor **42** is set at its highest value. The speed of the external fan motor **34** is also set at its highest value.

As conditioned air enters each of the rooms, the temperature increases until point **302** is reached. Both compressors continue operating, thereby increasing the room temperature to point **304**. As the temperature in each room increases, the damper for that room is gradually closed until point **306** is reached, at which point the damper is fully closed.

As the dampers begin to close, the speed of the blower motor **42** may be decreased to match the air flow requirement of all of the rooms.

When point **306** is reached for a room, the damper for that room is fully closed and conditioned air is no longer required

for that room. The thermal load of the room is removed from the total thermal load of all of the rooms and the first compressor **12** may be turned OFF. As more of the rooms reach point **306**, the total thermal load of all the rooms decreases until the second compressor is turned ON and the first compressor **12** turned OFF. If the total thermal load decreases still further, only the first compressor **12** is turned ON.

If all of the rooms are at the desired temperature plus hysteresis of 23° C., the total thermal load of all the rooms is 0 and both compressors are turned OFF.

As the supply of conditioned air to each of the rooms stops after point **306** is reached, the temperature of each of the rooms begins to decrease and pass through points **308** and **310**. Once point **310** is reached, the supply of conditioned air must start once again and the thermal load of the room is then added to the total thermal load of all of the rooms.

It is appreciated that the air conditioning system **10** is operative to optimize the operation of both compressors, the blower motor **42**, the dampers **56**, **58** and **60** and the external fan **26** to minimize overall energy consumption while maintaining the temperature of all of the rooms within the desired operating range.

It is also appreciated that the air conditioning system **10** is operative to provide cooling air during 'summer operation'.

It is appreciated by persons skilled in the art that the present invention in not limited by what has been particularly shown and described hereinabove. Rather, the scope of the invention is defined only by the claims which follow:

We claim:

1. An air conditioning system comprising:

at least first and second compressors;

at least first and second heat exchangers associated respectively with said at least first and second compressors;

at least third and fourth heat exchangers in refrigerant fluid communication respectively with said at least first and second heat exchangers , said at least third and fourth heat exchangers also being in heat exchange communication with a stream of air to be conditioned;

an air flow pathway arranged to receive said stream of air downstream of said third and fourth heat exchangers and to direct it to a plurality of enclosures via a plurality of air outlets; and

a control system operative to selectably operate said at least first and second compressors, such that none, all or some of said at least first and second compressors operate at a given time, said control system being operative to control the speed of operation of said first variable speed air blower at least partially responsive to the total heat load in said plurality of enclosures.

2. An air conditioning system according to claim **1** and wherein:

said plurality of outlets are equipped with individually controllable dampers; and

said control system also selectably operates said individually controllable dampers.

3. An air conditioning system according to claim **2** and wherein said control system operates said individually controllable dampers at least partially responsive to a relationship between the heat loads in the plurality of enclosures.

4. An air conditioning system according to claim **1** and wherein said control system selectably operates said at least first and second compressors at least partially responsive to the total heat load in said plurality of enclosures.

5. An air conditioning system according to claim **1** and also comprising a first variable speed air blower assembly operative to force air past said at least third and fourth heat exchangers.

6. An air conditioning system according to claim **5** and also comprising a second variable speed air blower assembly operative to force air past said at least first and second heat exchangers.

7. An air conditioning system comprising:

at least one compressor;

at least one first exchanger associated respectively with said at least one first compressor;

at least one second heat exchanger in refrigerant fluid communication respectively with said at least first heat exchanger, said at least one second heat exchanger also being in heat exchange communication with a stream of air to be conditioned;

an air flow pathway arranged to receive said stream of air downstream of said at least second heat exchanger and to direct it to a plurality of enclosures via a plurality of air outlets equipped with individually controllable dampers; and

a control system operative to selectably operate said at least one first compressor and said individually controllable dampers, at least partially responsive to the relationship between the heat loads in the plurality of enclosures, said control system being operative to control the speed of operation of said first variable speed air blower at least partially responsive to the total heat load in said plurality of enclosures.

8. An air conditioning system according to claim **7** and wherein said control system selectably operates said at least one compressors at least partially responsive to the total heat load in said plurality of enclosures.

9. An air conditioning system according to claim **7** and also comprising a first variable speed air blower assembly operative to force air past said at least one second heat exchanger.

10. An air conditioning system according to claim **9** and also comprising a second variable speed air blower assembly operative to force air past said at least one first heat exchanger.

11. An air conditioning system according to claim **7** and also comprising a data port communicating with said control system to permit external programming and monitoring of the operation thereof.

* * * * *

Vertiv Ex. 1011
Vertiv v. Valtrus