US005467609A

United States Patent [19]

Feeney

[11] **Patent Number: 5,467,609**

[45] **Date of Patent: * Nov. 21, 1995**

[54] **MODULAR FLOOR SUB-STRUCTURE FOR THE OPERATIONAL SUPPORT OF COMPUTER SYSTEMS**

[75] Inventor: **Edward K. Feeney**, Worthington, Ohio

[73] Assignee: **Liebert Corporation**, Columbus, Ohio

[*] Notice: The portion of the term of this patent subsequent to Sep. 13, 2011, has been disclaimed.

[21] Appl. No.: **201,587**

[22] Filed: **Mar. 3, 1994**

Related U.S. Application Data

[63] Continuation-in-part of Ser. No. 51,534, Apr. 23, 1993, Pat. No. 5,345,779.

[51] **Int. Cl.**[6] **F25D 17/06**

[52] **U.S. Cl.** **62/259.2**; 52/220.2

[58] **Field of Search** 62/259.2, 265; 454/184, 186; 52/126.1, 220.2

[56] **References Cited**

U.S. PATENT DOCUMENTS

2,579,447	12/1951	Boucher	52/126.1
3,007,212	11/1961	Gazin	52/126.1
3,348,345	10/1967	Byers et al.	52/126.1
3,643,389	2/1972	Sheppley	52/220.2
4,368,869	1/1983	Gelvezon et al.	248/656
4,558,544	12/1985	Albrecht et al.	52/126.2
4,862,654	9/1989	Macias	52/126.1
5,345,779	9/1994	Feeney	62/259.2

Primary Examiner—Henry A. Bennet
Attorney, Agent, or Firm—Mueller and Smith

[57] **ABSTRACT**

A modular floor sub-structure is provided wherein discrete floor modules having bottom surfaces and sides extending upwardly to support paired floor tile are interconnected to sit upon a floor surface and, in turn, support rack-mounted computer components. Select ones of the floor modules contain air cooling coils and blowers, while others are provided with uninterrupted power supplies and still others retain power distribution networks. The cooling system of a given module as well as the UPS components of another given module are provided having a capacity for supporting one computer component. Where more than one computer component is to be supported by the system, then additional modules are provided to develop an expanded elevated floor surface with power and heat removal servicing specific to each computer component. A step arrangement is provided, the interior of which is utilized to retain flexible chilled water conduits for servicing the cooling coils within adjacently disposed floor modules as well as for providing servicing access to the cooling coils, thh UPS system and a poer distribution console. The step structure pivots from a seated to an open position to provide service access.

26 Claims, 11 Drawing Sheets

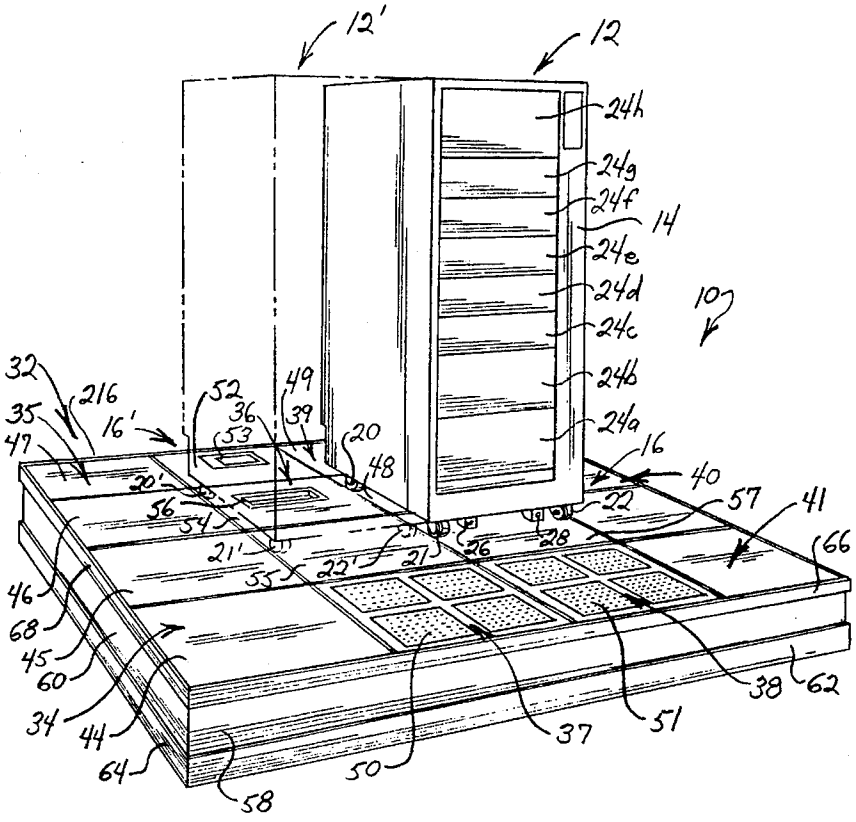

Vertiv Ex. 1013
Vertiv v. Valtrus

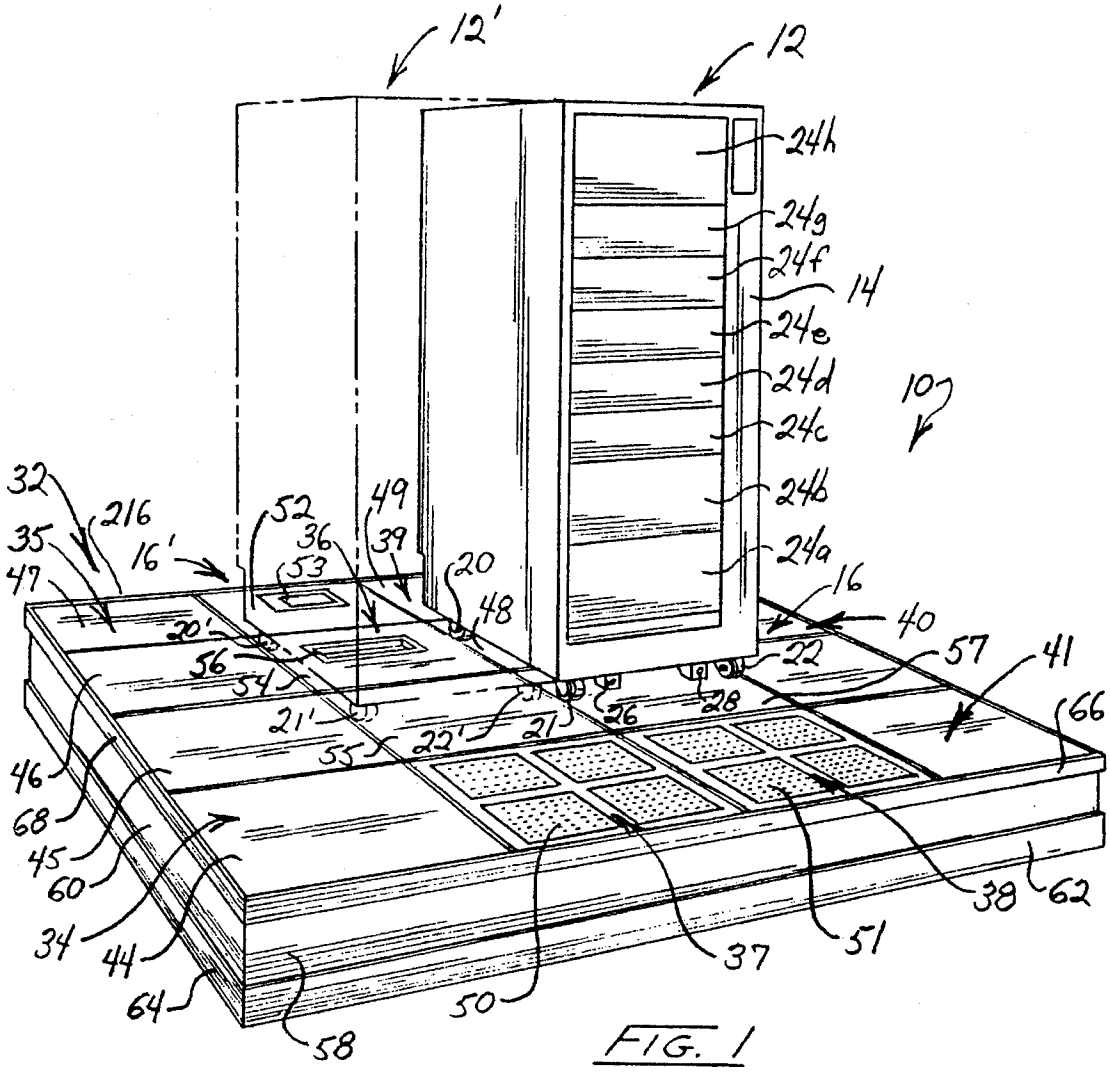
12'
12
24h
24g
24f
14
24e
24d
10
24c
24b
24a
32
216
35
16'
47
52
36
49
39
53
20
48
16
40
20'
56
54
22
57
41
21'
22'
21
26
28
66
55
46
68
45
60
34
44
64
58
50
37
51
38
62

FIG. 1

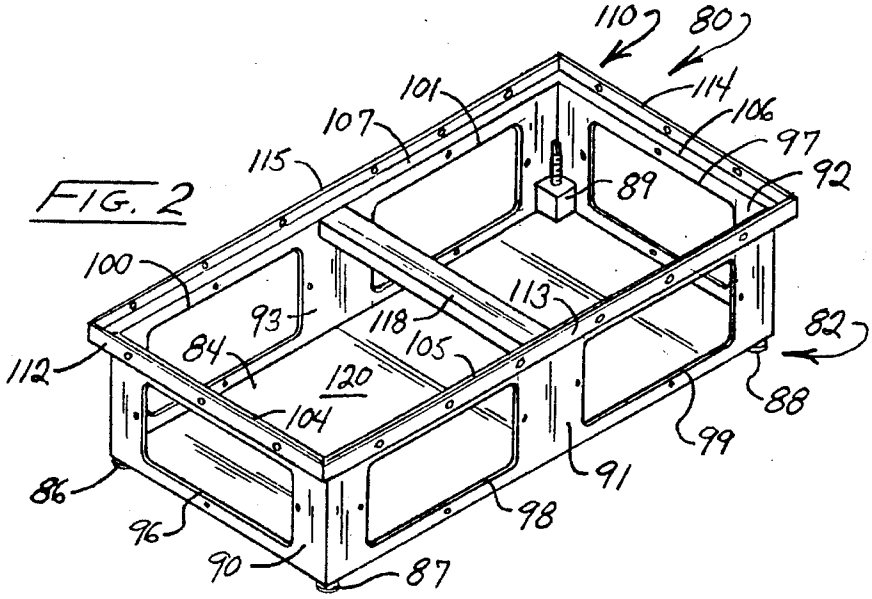
110
80
101
114
107
106
97
115
89
92
100
113
93
118
105
82
112
84
120
104
88
99
91
86
96
98
90
87

FIG. 2

FIG. 3

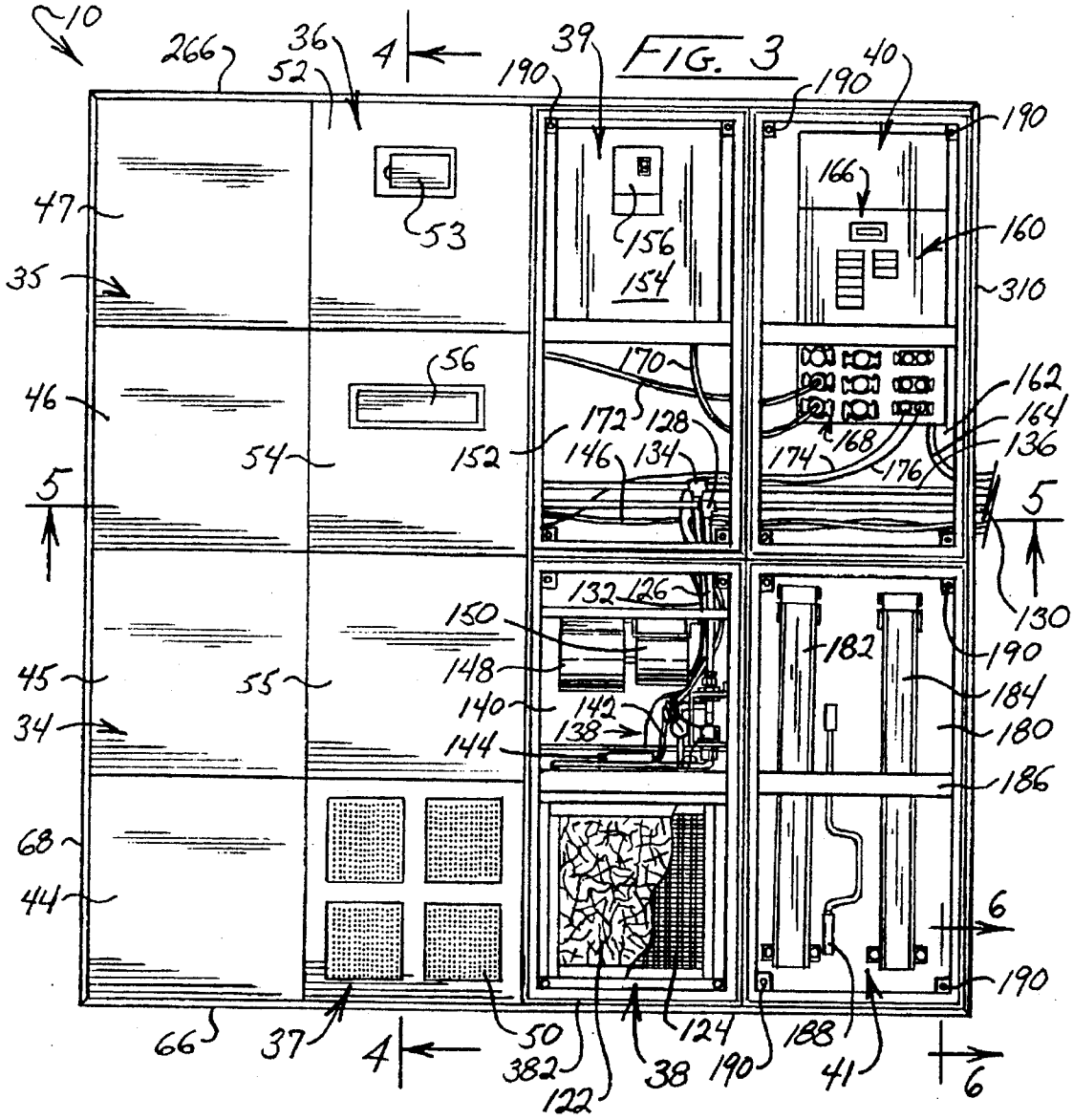

FIG. 6

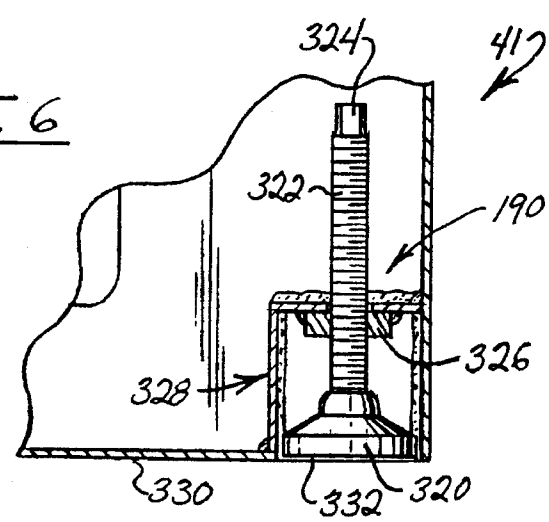

Vertiv Ex. 1013
Vertiv v. Valtrus

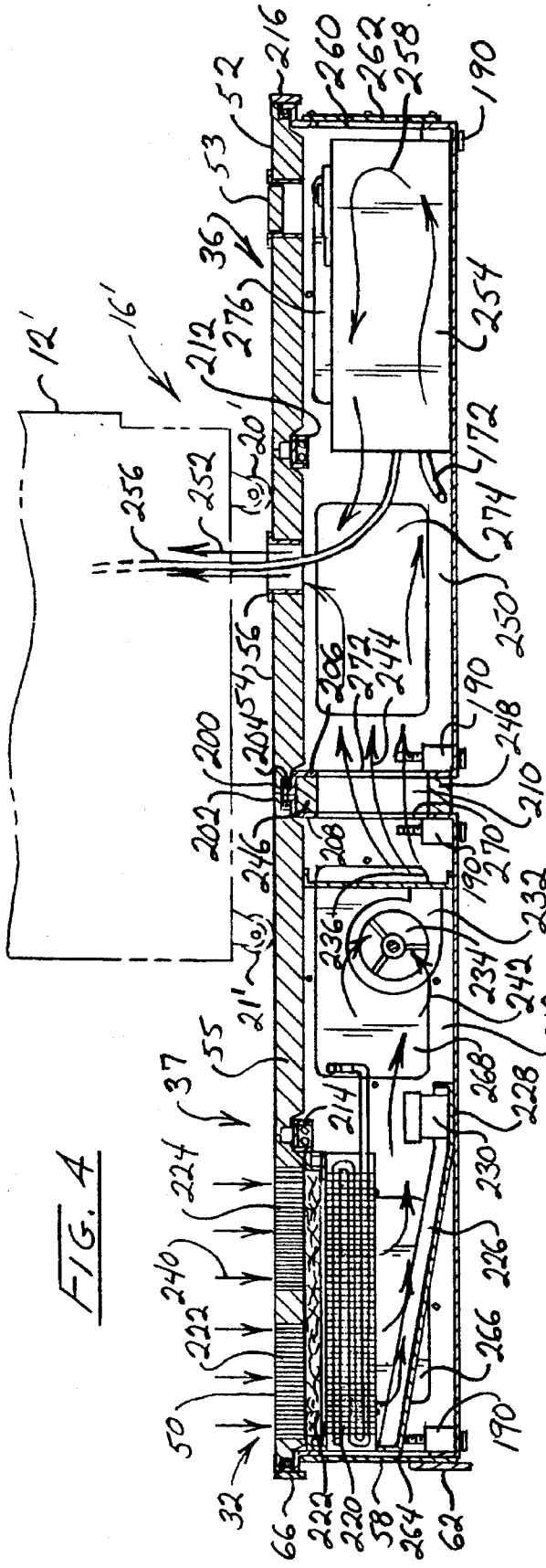

FIG. 4

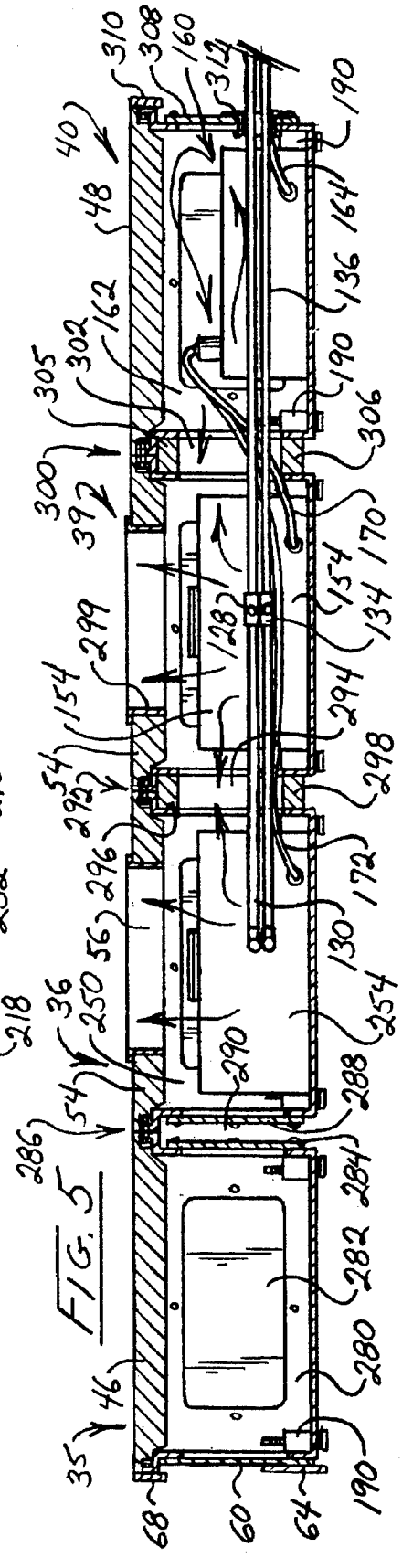

FIG. 5

Vertiv Ex. 1013
Vertiv v. Valtrus

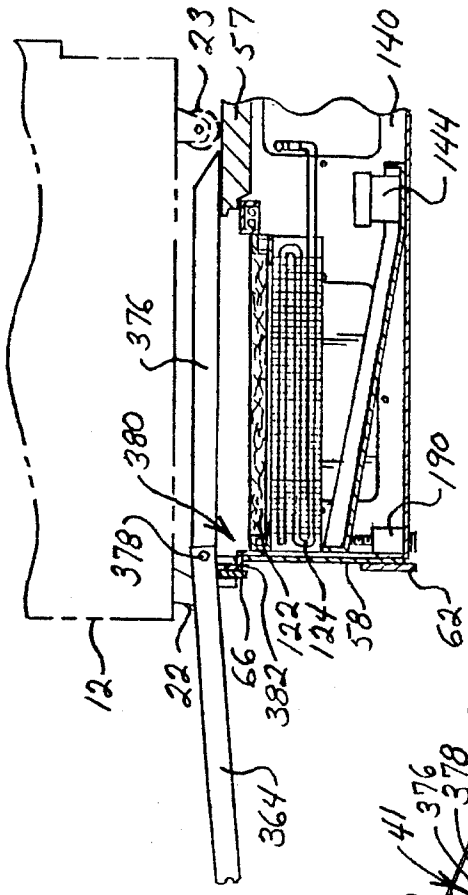

FIG. 8

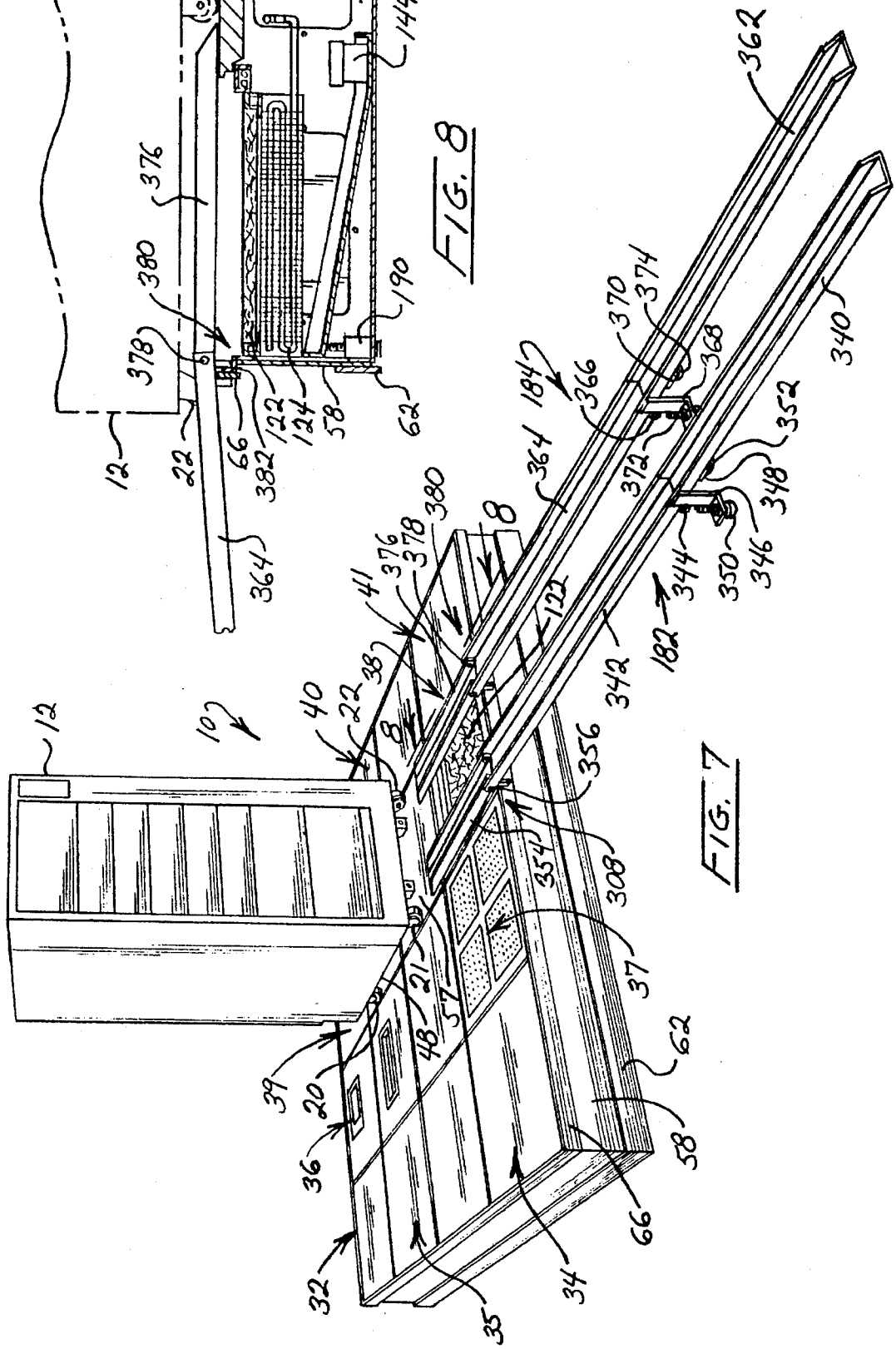

FIG. 7

Vertiv Ex. 1013
Vertiv v. Valtrus

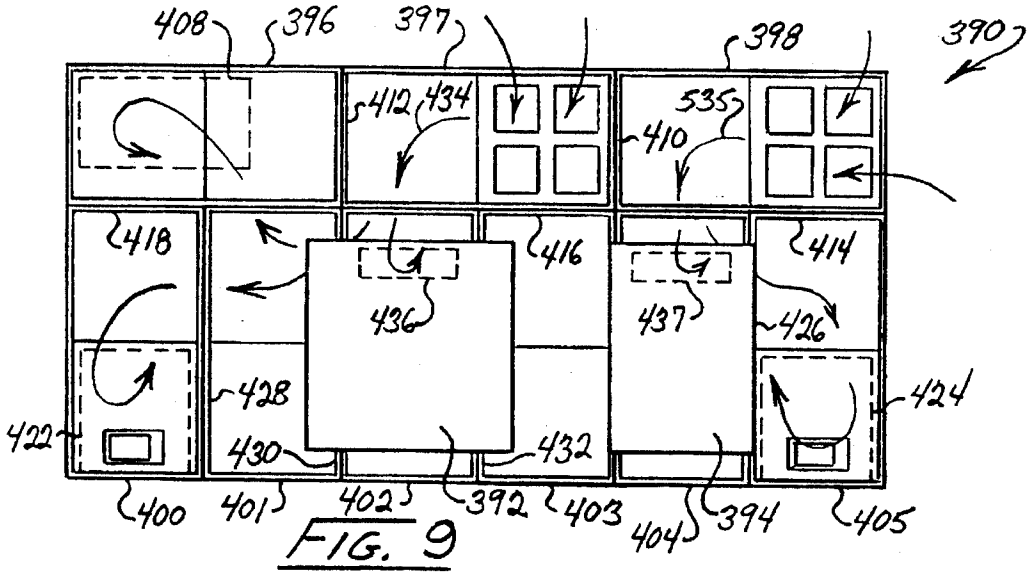
408
396
397
398
390
412
434
535
410
418
416
414
436
437
426
428
424
422
430
432
400
401
402
392
403
404
394
405

FIG. 9

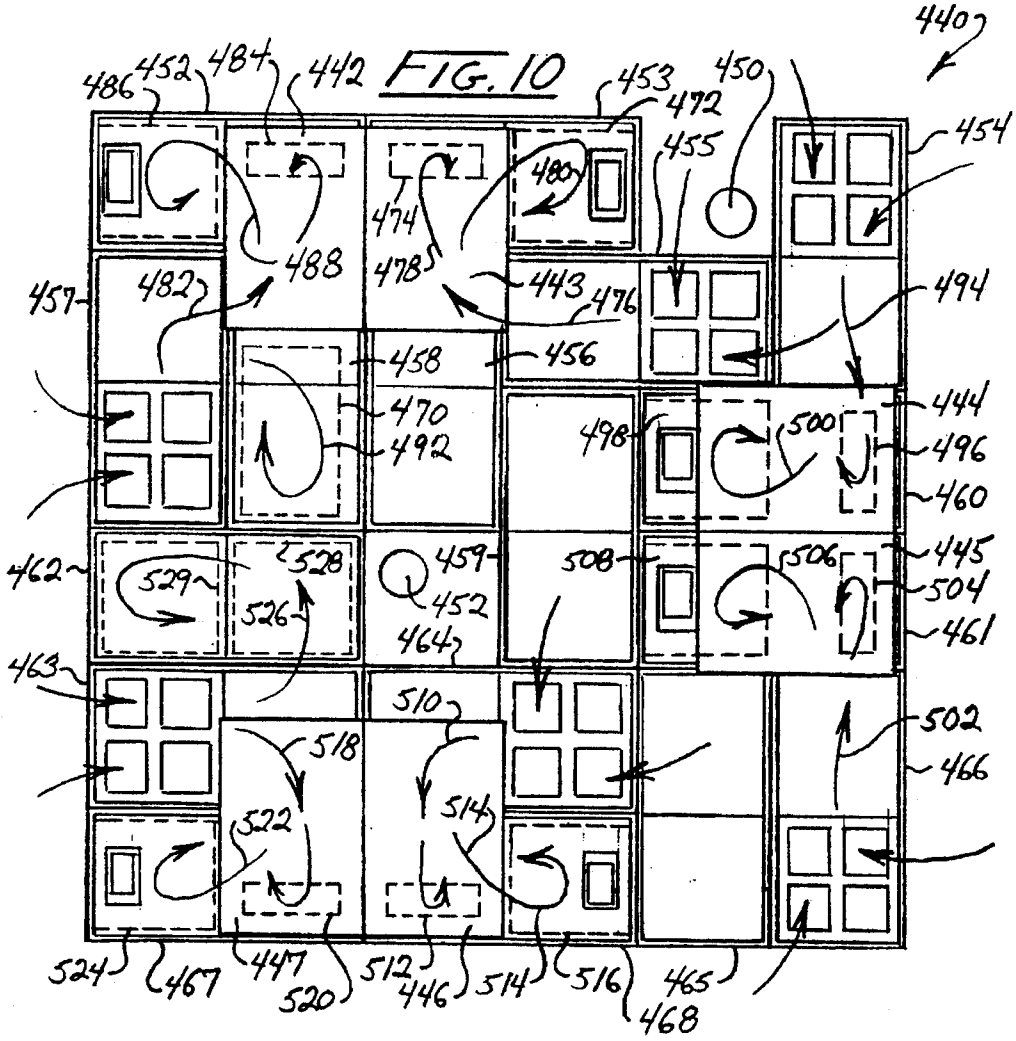
440
486
452
484
442
453
450
472
454
455
480
474
488
478
443
476
457
482
494
458
456
470
492
498
500
444
496
460
462
529
528
459
508
506
445
504
526
452
464
461
463
510
502
518
466
514
522
524
467
447
520
512
446
514
516
465
468

FIG. 10

FIG. 11

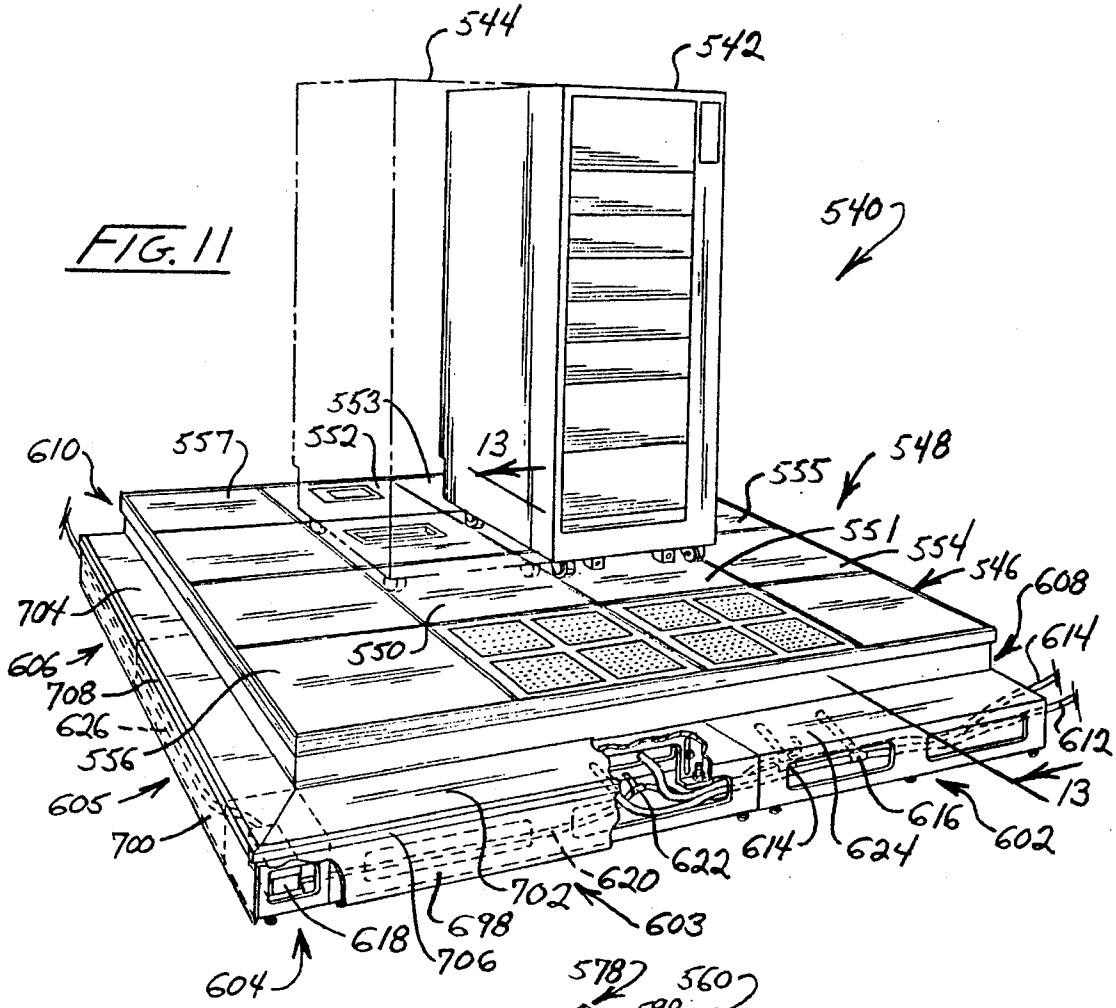

FIG. 12

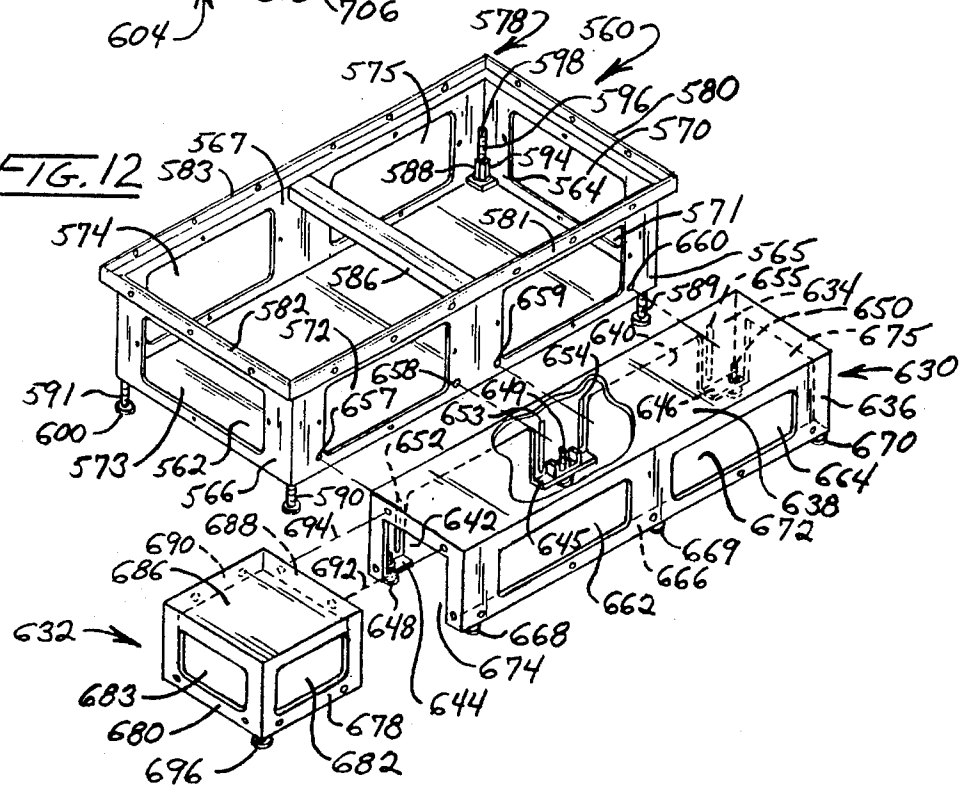

Vertiv Ex. 1013
Vertiv v. Valtrus

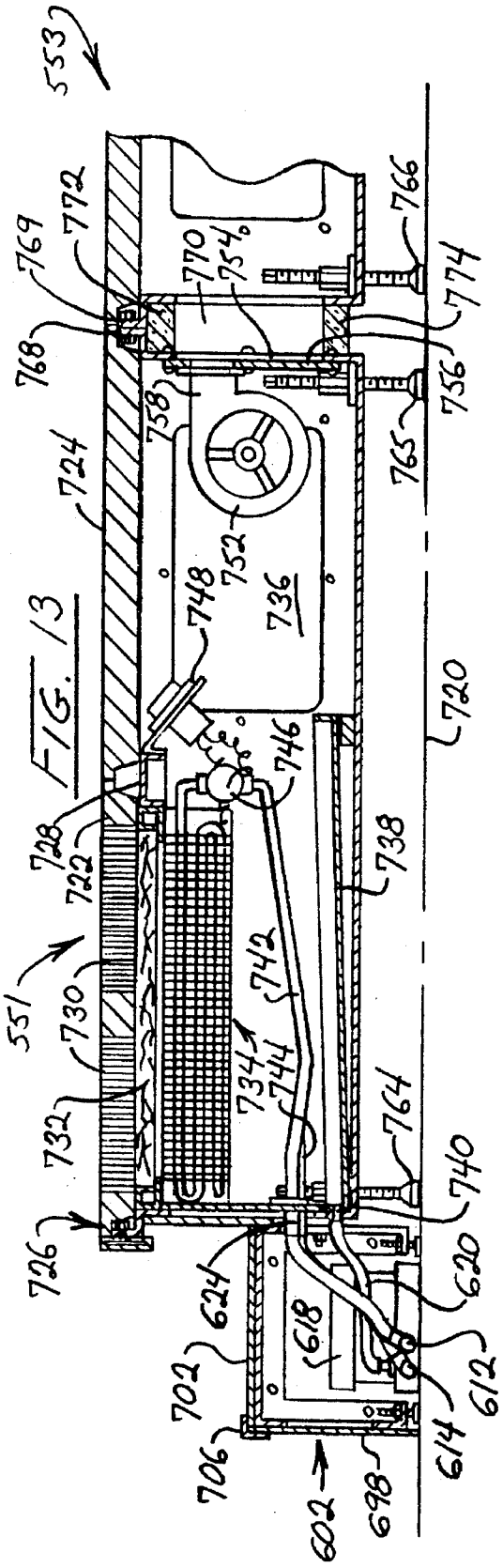

FIG. 13

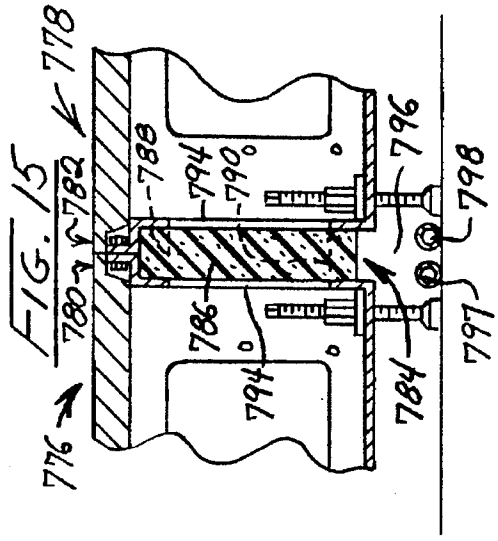

FIG. 15

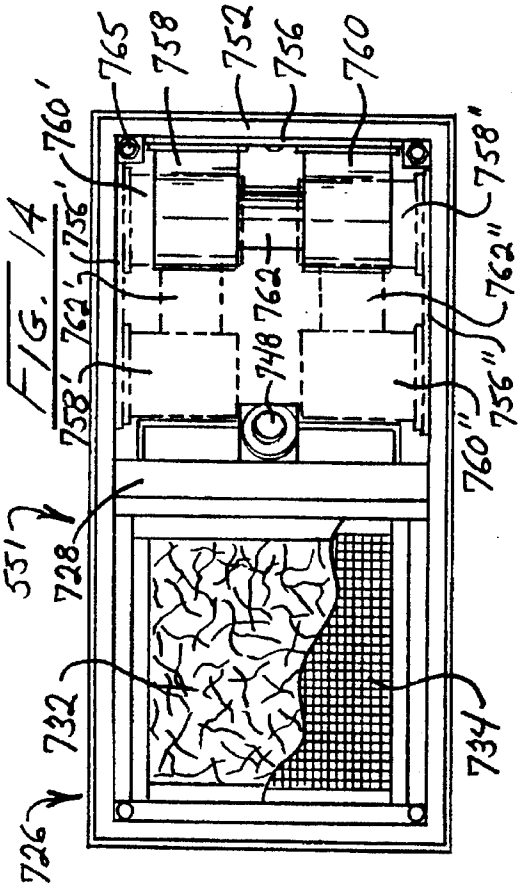

FIG. 14

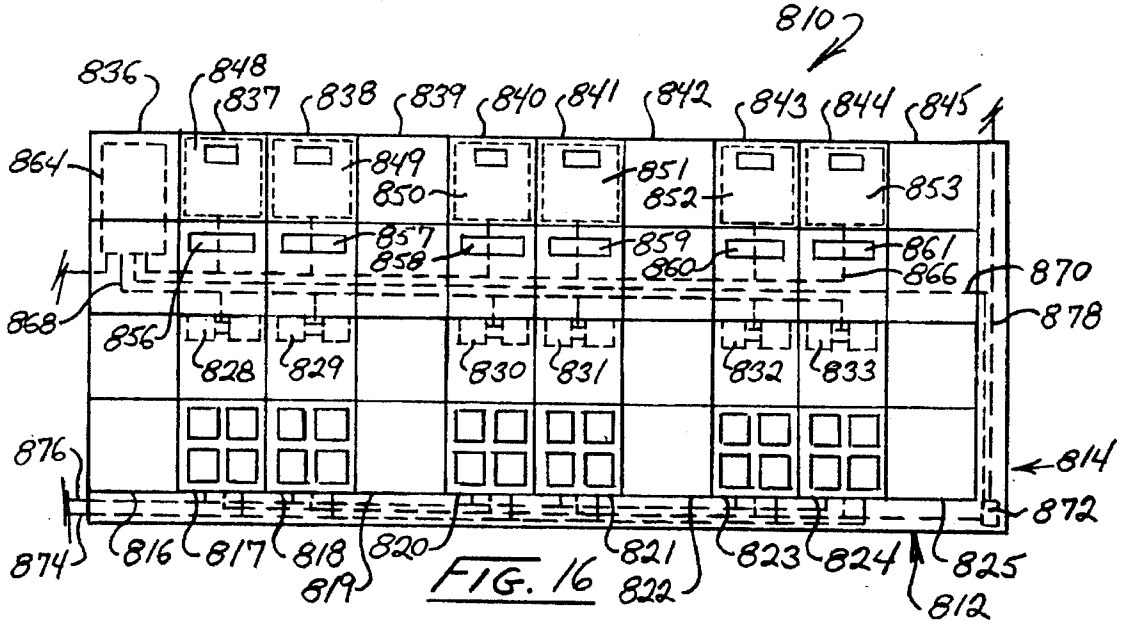
810
836
848
837
838
839
840
841
842
843
844
845
864
849
850
851
852
853
857
858
859
860
861
866
870
868
856
878
828
829
830
831
832
833
876
814
872
874
816
817
818
819
820
821
822
823
824
825
812

FIG. 16

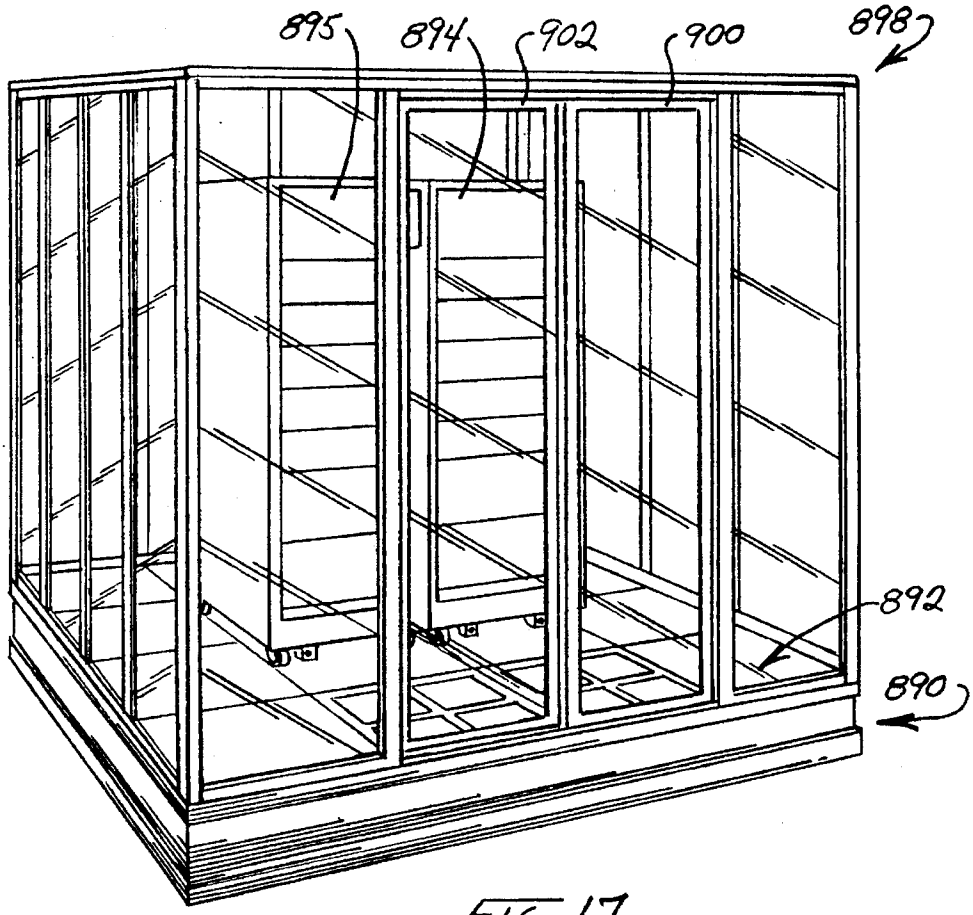
895
894
902
900
898
892
890

FIG. 17

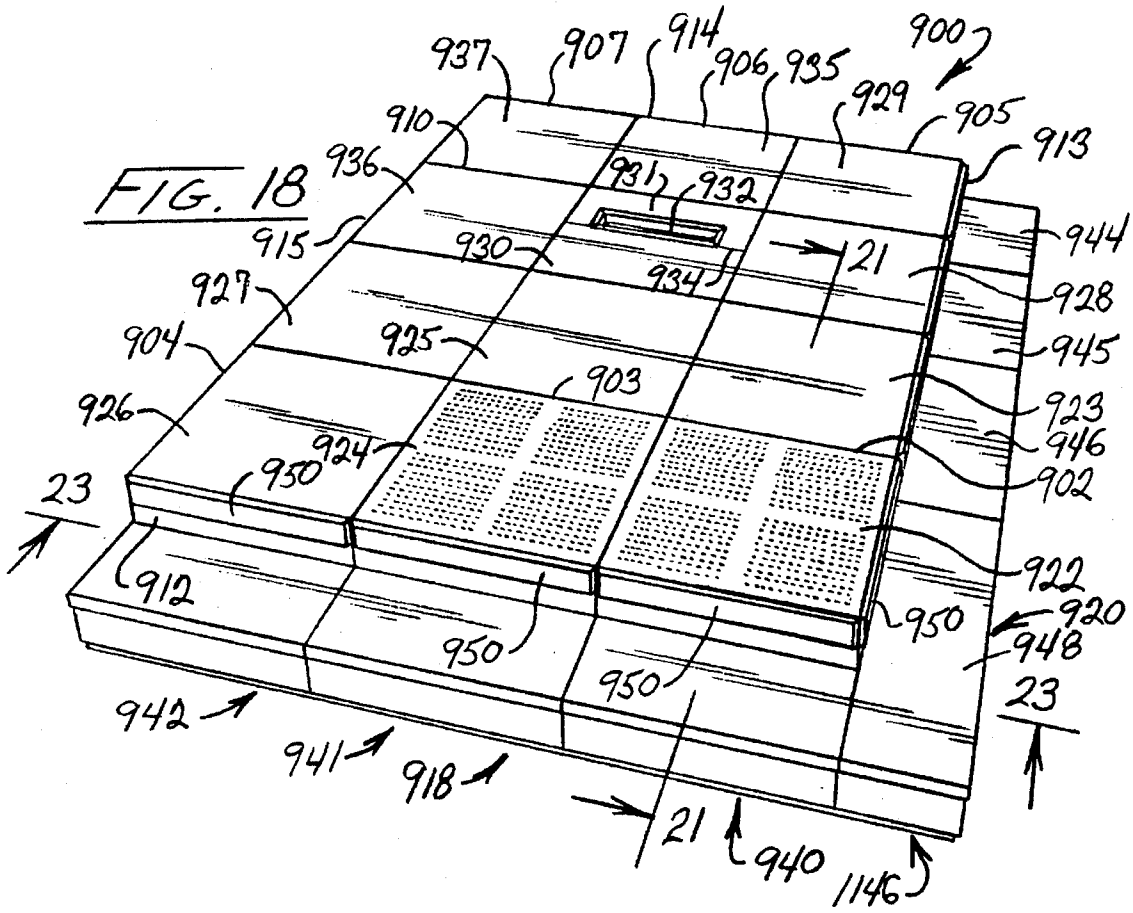

FIG. 18

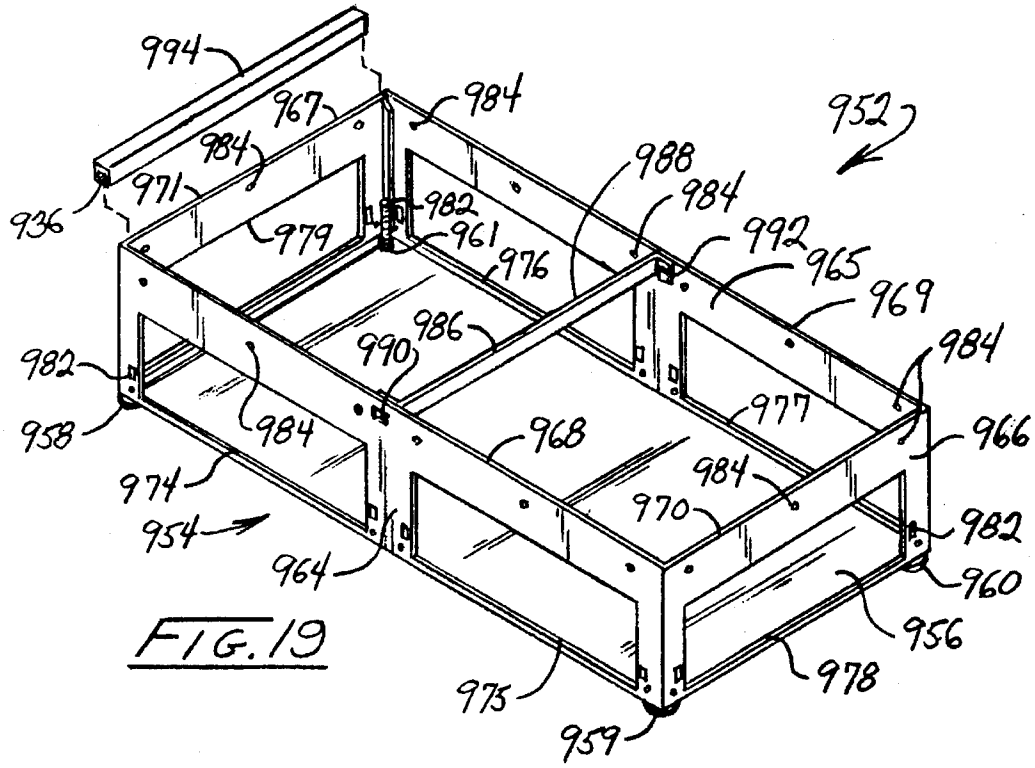

FIG. 19

Vertiv Ex. 1013
Vertiv v. Valtrus

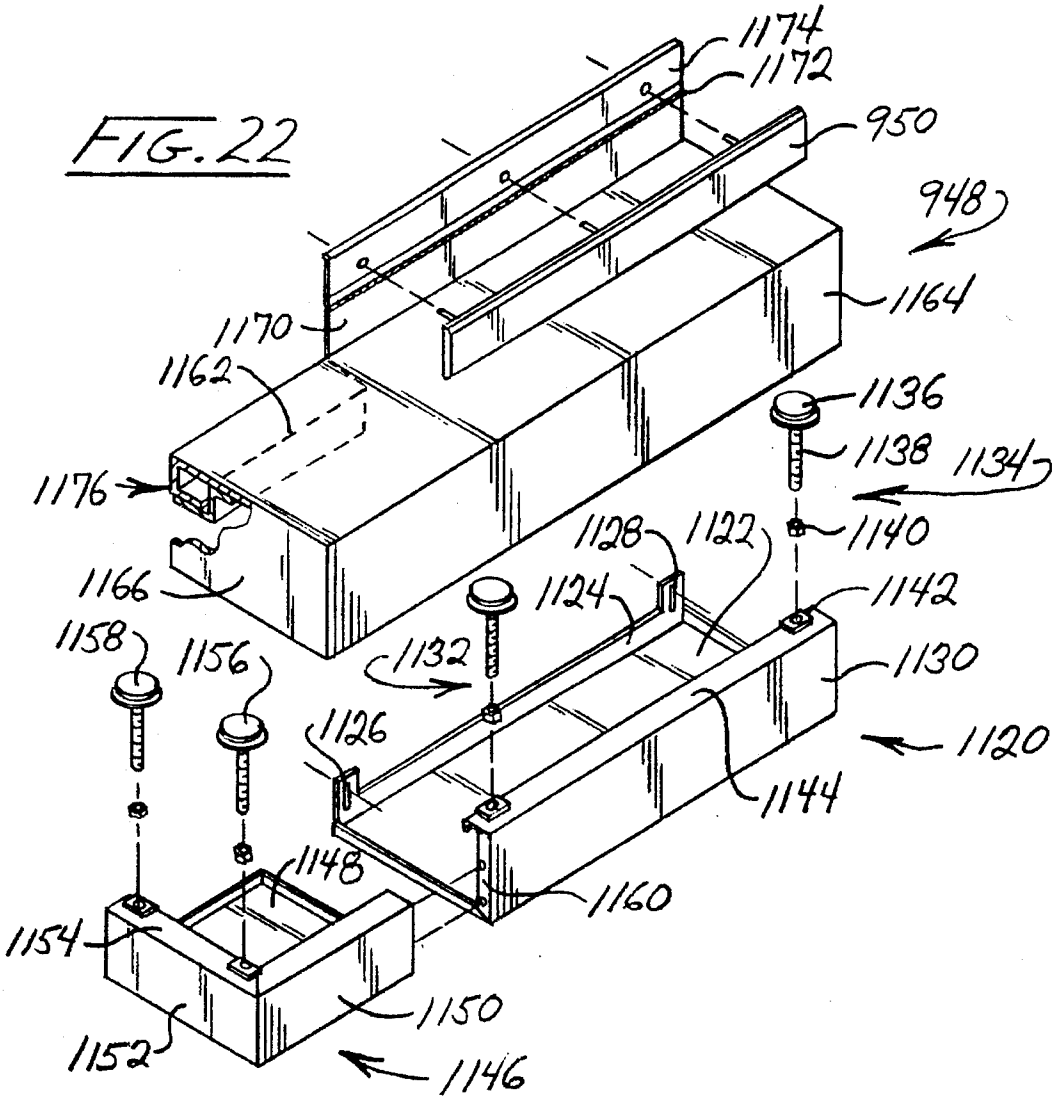
FIG. 22
1174
1172
950
948
1164
1170
1162
1136
1138
1134
1176
1140
1128
1122
1166
1124
1142
1158
1156
1132
1130
1126
1120
1144
1148
1160
1154
1150
1152
1146

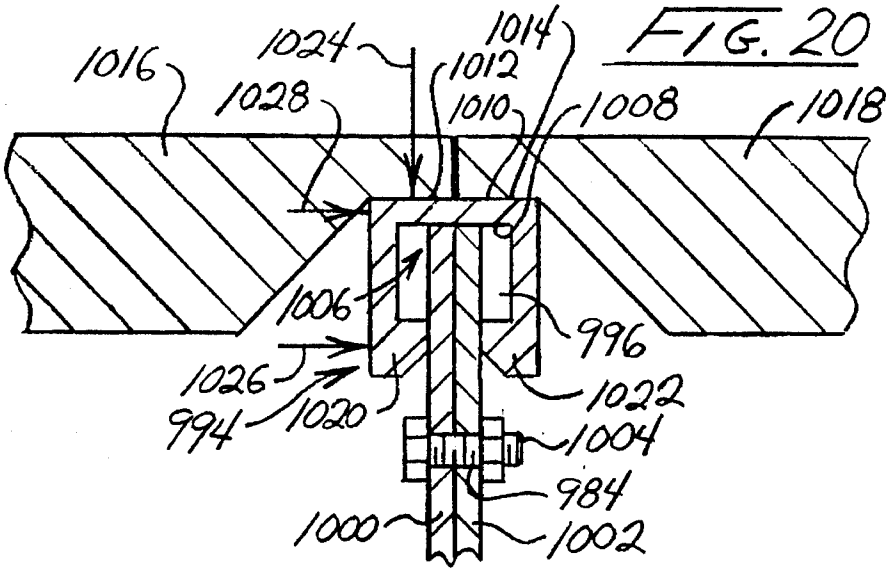
FIG. 20
1024
1014
1012
1016
1028
1010
1008
1018
1006
996
1026
1022
994
1020
1004
984
1000
1002

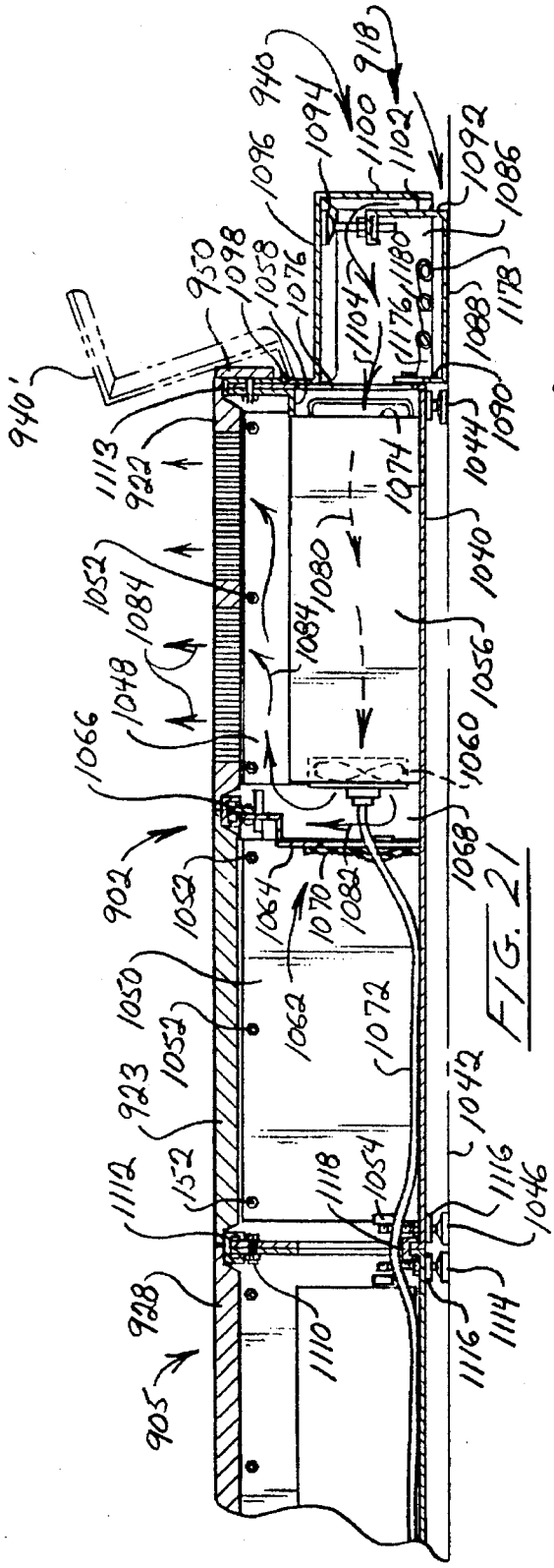

FIG. 21

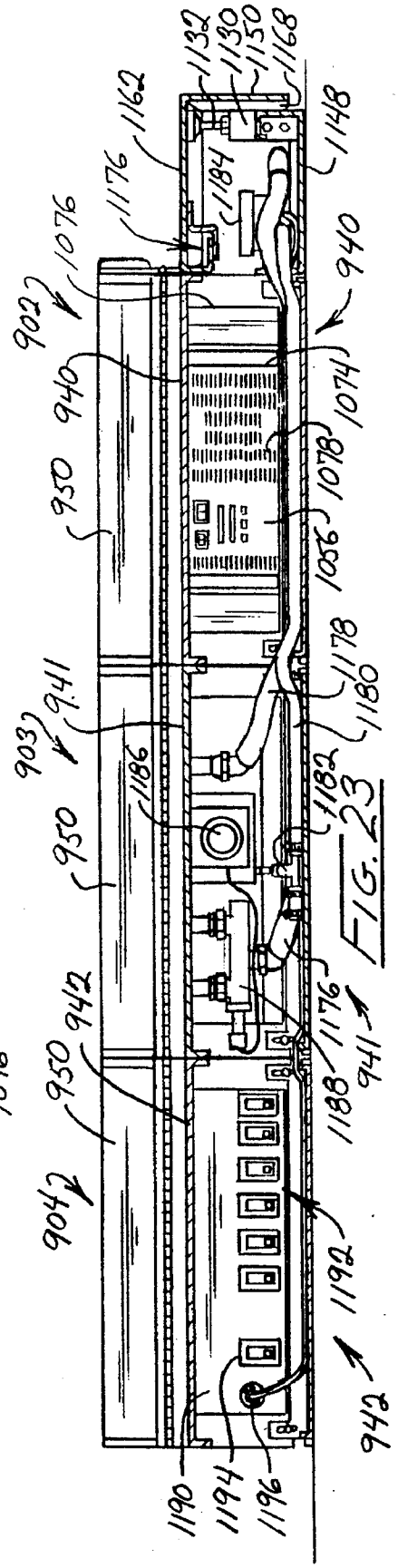

FIG. 23

Vertiv Ex. 1013
Vertiv v. Valtrus

MODULAR FLOOR SUB-STRUCTURE FOR THE OPERATIONAL SUPPORT OF COMPUTER SYSTEMS

CROSS REFERENCE TO RELATED APPLICATIONS

The present application is a continuation-in-part of application for U.S. patent Ser. No. 08/051,534 by Edward K. Feeney, filed Apr. 23, 1993, titled "Modular Floor Sub-Structure for the Operational Support of Computer Systems", and assigned in common, now U.S. Pat. No. 5,345,779, issued Sep. 13, 1994.

BACKGROUND OF THE INVENTION

Traditionally, industrial data centers have been designed to accommodate relatively large "mainframe" computer systems. These systems include stand-alone hinged cabinet contained control processing units, tape guide systems, disk drives, printers, control consoles, and the like. When assembled within a data center, the systems have required a relatively larger amount of floor area within a given building, as well as a carefully controlled environment. Control over that environment requires a dedicated, sealed computer room which is serviced by corresponding dedicated air-conditioning systems. In similar fashion, critical equipment within the room is serviced by dedicated uninterruptible power supplies. Because of the extensive amount of electrical interconnection required both for power supply and system communication, these computer rooms typically contain raised floors formed of tiles supported upon frames beneath which the complex cable networks can be laid. Generally, the provision of such computer rooms has represented a substantial financial investment on the part of the user.

Over the recent past, the computer industry has introduced processing systems employing more modem, modular electronics and supporting components permitting their rack mounted installation. Such modularized designs provide for substantial flexibility in accommodating for varying processing demands. For example, these systems readily are expanded incrementally as the growth of processing needs on the part of the user increases. As a consequence of improved design, such systems exhibit lower heat loads, lower noise output, and a compactness in packaging such that they are promoted for installation within the environment of a business office as opposed to a data center. One such system, for example, is identified under the trademark "AS/400", marketed by International Business Machines Corporation. This system offers a family of processor related modular units generally employing rack-mounted packaging. Cabinetry carrying the rack mounted modules will, for example, have nominal dimensions of 26 inches width by 36 inches depth, and 62 inches height. To facilitate their delivery to an intended operating location, they are supported for movement upon casters. With the racks fully loaded, the equipment may, for example, exhibit a heat load of 11,000 BTUs per hour, representing a demand for about one ton of air-conditioning. Similarly, the units will call for an uninterrupted power supply load capacity of about 3 KVA. These requirements, particularly when more than one component of a system is utilized (a typical case) generally cannot be accommodated by the in-place air-conditioning system of a building nor its in-place power capabilities. Thus, the user is called upon to find a technique of buttressing air-conditioning capacities, as well as power feeder inputs. Additionally,

to accommodate for anticipated growth increments in such systems, in keeping with that aspect of the system design, the user must anticipate future air-conditioning needs, as well as future uninterruptible power supply needs. The result, in general, has been a resort on the part of the user to a conventional sealed computer room, an approach which essentially compromises many of the advantages of this modular form of processing system. Such computer room installations further may be called for where the office facilities within which the systems are installed are leased. Very often, the owners of such leased facilities will substantially shut-down building air-conditioning systems over weekends and the like much to the detriment of the data center. Thus, a dedicated environment is necessitated. Further, where computer rooms are installed within leased facilities, those dedicated rooms become fixtures and, without agreement otherwise, cannot be dismantled and transported to a new installation site.

As is apparent, the full advantage and flexibility of these newer modular computer systems can be recognized only when a corresponding flexible, modular support of their environmental and power input demands can be achieved on a practical cost basis.

SUMMARY

The present invention is addressed to a floor supported sub-structure system and module assemblage serving to operationally support computer system components, particularly of the incrementally expandable, rack mounted variety. Floor sub-structure assemblages of the invention are formed of interconnected, uniformly dimensioned floor modules, each with a frame with sides extending from a bottom surface to an upper portion or edge. This edge supports an upwardly disposed support surface. Two square floor tiles are carded at the upwardly disposed support surface by each module such that each defines an internal chamber. The internal chamber of select ones of the floor module chambers contain modular operational support devices for dedicated use by corresponding computer components. In this regard, air cooling coils and associated motor driven blower fans are installed in certain of the floor modules. The cooling coils within those modules are designed to accommodate the heat load of one computer component. Because of the restrictive region of cool air flow utilized within the modular assemblage, and the lower heat loads involved with this form of computer component, these coils may be designed to avoid vapor condensation for most installations. Uninterruptible power supply (UPS) devices are positioned with the confines of the internal cavities of other select floor modules. These UPS devices are provided with a limited power capacity which is dedicated to the requirements of an associated computer component. Still others of the floor modules are formed having a power distribution network mounted therein. These networks are designed, for example, to provide circuit breaker protected inputs for, for example, up to five UPS devices, or a computer component where those devices are not utilized. The networks also provide a source of power for a corresponding five blower fan motors and any associated condensation collection pumps.

Interconnection between adjacent floor modules is by bolting together adjacent upwardly disposed regions of side portions of the modules. Leveling of the modules is carded out through the use of floor engaging foot structures which, in one embodiment permitting very low elevated floor heights provides a capability for retracting these foot mod-

Vertiv Ex. 1013
Vertiv v. Valtrus

ules entirely within the cavities of the modules themselves. For the latter embodiment, elevated floor heights as low as, for example, about 10 inches are achievable. To direct air flow from the blower structures to outlets within other modules directed into the lower regions of the computer system components, panel openings are formed within the sides of the modules. These panel openings may be selectively blocked to define air flow paths.

In another embodiment of the invention, the modules are formed with floor engaging foot structures extending below the bottom surface thereof and which are not retractable to the discrete cavities of each such module. This results in a cost benefit but a slightly higher elevated floor surface. Preferably utilized with the module assemblage is a step structure surrounding one or more sides of an assemblage of modules. By positioning those modules carrying cooling coils adjacent such outer side of the assemblage, the interior of the modular step structures can be employed to retain conduits carrying cooling fluids as well as any collected condensate from coils. This provides an advantageous separation of power distribution cabling from the conduits carrying fluid. In general, the conduits for carrying cooling water and the cabling for electrical distribution may be mounted, through the panel openings within the sides of the modules.

In a preferred embodiment of the invention, a step structure is utilized along a linear portion of an assemblage of the floor modules. This step structure includes the noted step cavity for carrying cooling conduits but additionally has a step defining structure. The step defining structure is pivotally movable between a seated position and an open position to gain access to the side of the floor module to which it is attached. These floor modules are the active ones including the cooling coil with exposed and now accessible thermostat and couplings for movement of coolant fluid; the active accessible components of a power distribution network such as circuit breakers; and the readouts and manual input controls of an uninterruptible power supply. Access to these components now becomes quite facile to service personnel.

In another preferred arrangement of the invention, that floor module which incorporates an uninterruptible power supply which is located adjacent the noted step structure employs a UPS arrangement incorporating a self-contained cooling fan. Then, the floor module containing UPS device is structured such that the UPS system is self cooling and, in fact, its air flow path providing such cooling is isolated from the air flow path developed from the cooling coil containing floor module. With such an arrangement, should power be lost, then even though air circulation blower associated with the cooling coil is not working, the UPS system, now on battery power supply, will remain itself cooled pending orderly shut-down of the supported computer system. For this arrangement, the step structure is designed to provide an air transfer opening with an air transferability extent at least equivalent with the air input geometry of the UPS device.

Movement of the caster mounted computer system components on and off of the substructure is provided through the use of a ramp assembly formed of two folding ramps which may advantageously be stored within an empty floor module. Additionally, floor modules may be utilized to support an environmental confinement enclosure where the systems are employed in rigorous factory environments or where it is desired to employ a Halon based form of fire protection. By utilizing the restrictive enclosures, the amount of Halon required is held to an environmentally advantageous minimum.

The invention, accordingly, comprises the system and apparatus possessing the construction, combination of elements, and arrangement of parts which are exemplified in the following detailed disclosure.

For a fuller understanding of the nature and objects of the invention, reference should be made to the following detailed description taken in connection with the accompanying drawings.

BRIEF DESCRIPTION OF THE DRAWINGS

FIG. **1** is a pictorial representation of a system employing an assemblage of floor modules according to the invention and supporting two computer system components, one being shown in phantom to reveal floor structuring;

FIG. **2** is a perspective view of the frame components of a floor module as may be employed with the assemblage shown in FIG. **1**;

FIG. **3** is a plan view of the floor assembly shown in FIG. **1** with portions removed and broken away to reveal internal structure;

FIG. **4** is a sectional view taken through the plane **4—4** in FIG. **3**;

FIG. **5** is a sectional view taken through the plane **5—5** shown in FIG. **3**;

FIG. **6** is a partial sectional view taken through the plane **6—6** shown in FIG. **3**;

FIG. **7** is a perspective view of the system of FIG. **1** showing employment of a ramp structure for moving computer system components to and from the floor module assemblage;

FIG. **8** is a partial sectional view taken through the plane **8—8** shown in FIG. **7**;

FIG. **9** is a top view of a system according to the invention showing an assemblage of floor modules with enhanced support component access;

FIG. **10** is another top view of an assemblage of floor modules according to the invention showing the flexibility thereof to accommodate for varying available facility areas;

FIG. **11** is a pictorial view of another embodiment of the invention showing the floor module assemblage formed in combination with a step structure;

FIG. **12** is a an exploded perspective view showing a floor module frame structure and associated step structures employed with the embodiment of FIG. **11**;

FIG. **13** is a partial sectional view taken through the plane **13—13** shown in FIG. **11**;

FIG. **14** is a top view of a floor module shown in FIG. **13** and additionally showing alternate blower fan orientations;

FIG. **15** is a partial sectional view of a floor module assemblage described in connection with FIG. **11** showing an alternate intermodule insert arrangement;

FIG. **16** is a top view of a floor module assemblage and associated step structure according to the invention schematically showing the positioning of fluid carrying conduits and power distribution conduits;

FIG. **17** is a pictorial representation of an embodiment of the system of the invention showing a floor module assemblage in combination with an environmental confinement enclosure;

FIG. **18** is a pictorial representation of a system employing an assemblage of floor modules according to a preferred embodiment of the invention, incorporating a step structure with service personnel access features;

FIG. **19** is a perspective view of the frame components of a floor module as may be employed with the assemblage shown in FIG. **18**;

FIG. **20** is a partial sectional view of a floor tile support arrangement employed with the frame components of FIG. **19**;

FIG. **21** is a sectional view taken through the plane **21**—**21** shown in FIG. **18**;

FIG. **22** is an exploded perspective view showing a step structure employed with the assemblage of FIG. **18**; and

FIG. **23** is a sectional view taken through the plane **23**—**23** in FIG. **18**.

DETAILED DESCRIPTION OF THE INVENTION

Referring to FIG. **1**, the floor supported sub-structure system of the invention is revealed generally at **10**. System **10** as depicted, represents a somewhat minimal configuration for use in the heat removal and power input support of a component of a computer system, for example, as represented at **12**. Component **12** is of a rack mounted variety, having an upright housing **14** supported from a base region as represented generally at **16** which, in turn, is supported upon rolling wheels or casters at each corner thereof, three of which are represented at **20**–**22**. Within the housing **14** are a sequence of pull-out racks ***24a***–***24h*** which may be pulled out in the manner of a drawer by attending personnel. To avoid causing the component **12** to tilt forwardly when one or more racks ***24a***–***24h*** are pulled out, an L-shaped forward brace (not shown) is attached to the housing **14** at brackets **26** and **28** following the positioning of housing **14** upon system **10**. The base region **16** of the device **12** is rectangular and has a nominal dimension of 26 inches in width, 36 inches in depth, and 62 inches in height. For the arrangement shown, the system **10** is assembled to provide support to two adjacently disposed such components **12**, the next adjacent component being represented in outline fashion and in phantom at **12'** as being supported upon casters **20'**–**22'** and having a base region **16'**. Components **12** and **12'** preferably perform in conjunction with an uninterruptible power supply (UPS) which, in turn, receives a utility power input from a feeder line and a distribution network which is circuit breaker protected. These devices may, for example, present a heat load of about 11,000 BTUs per hour to the environment within which they are operating.

System **10** permits the components **12** and **12'** to be used as originally intended, i.e. within an office environment without requiring the revision of the air conditioning system thereof and without requiring the procurement of the UPS system having capacities anticipated for future expansion.

FIG. **1** reveals that components **12** and/or **12'** are supported upon an elevated floor represented generally at **32** which is formed of an assemblage of eight floor modules seen in FIGS. **1** and **3** at **34**–**41**. While each of the modules **34**–**41** is formed having a frame component of standardized dimension and shape, certain of them will contain conditioners for air such as chilled water cooling coils or the like which are mounted, for example in modules **37** and **38**, as well as UPS systems as are located within modules **36** and **39** in the system of FIGS. **1** and **3**. Each of the modules **34**–**40** is formed to support two rigid floor tiles which, for example, may be for a variety employed within conventional computer room false floors. Generally, these floor tiles will be 24 inches square in dimension. Two such floor tiles, for example those provided in conjunction with module **34**, are seen at **44** and **45**. Similar, contiguous tiles are provided in conjunction with modules **40** and **41**. However, modules **37** and **38**, in addition to conventional tiles **55** and **57**, will be seen to contain such tiles as are shown at **50** and **51**, each carrying a pattern of air entry holes or openings providing for an air input to the cooling coils immediately therebeneath. Floor modules **36** and **39**, in addition to providing a portion of the support for respective components **12** and **12'** also contain a compact uninterruptible power supply essentially encompassing about one-half of their lengthwise dimension. Accordingly, tiles such as that shown at **52** in the case of floor module **36** are configured having a door opening **53** which provides convenient access for the operator to observe UPS readouts such as status as to whether the devices are under battery drive or utility drive, and the current power load being imposed. The adjacent tile **54** within floor module **52** contains an air outlet **56** through which cooled air may flow into an appropriate base region of the computer component **12'**. An identical arrangement is provided with respect to computer component **12** as provided from floor module **39**. The outer exposed sides of the assemblage of system **10** are covered with a side panel or fascia, two of which are seen at **58** and **60** in FIG. **1**. Additionally, extending up from the floor level for the exposed sides of the assemblage are polymeric baseboards, two of which are shown at **62** and **64**. In similar fashion, the upper edges of the sides of the assemblage are covered with a kick panel formed of a polymeric material, two of which are seen in FIG. **1** at **66** and **68**.

With the arrangement thus shown, the components, for example as at **12** and **12'** may be placed within a conventional office environment and will be supplied with adequate cooled air for heat removal, distributed power, and, where desired, an uninterrupted power supply. No computer room construction is required. In general, a cooling arrangement within one module is designed to provide the capacity for one such component **12**. The UPS systems are similarly designed for dedicated use with one component. Thus, it may be observed that the modular system readily grows with incremental growth of the overall facility. The height of the elevated floor **32** for the embodiment shown may be as minimal as about 10 inches, a height generally representing a step height. Preferably, the assemblage represented by system **10** will provide for adequate floor space to permit personnel access to the components as at **12** and **12'**. For some installations, it further may be desirable that the components **12** or **12'** rest upon floor tiles which need not be removed for maintenance access to support devices and systems contained within the modules. However, the "footprint" or square footage demanded by the system illustrated is so conveniently small as to permit its use within facilities having more restricted area availability. In this regard, for the example shown in FIGS. **1** and **3**, the entire installation has a footprint dimension of about 8'×8'. Of advantage in addition to the modularity and expandability, the system **10** easily is removed from one facility or building to another and does not constitute a fixture.

Looking to FIG. **2**, one embodiment for the frame component of a floor module is represented generally at **80**. Formed, for example, of sheet steel which is welded to achieve the configuration shown, the frame component **80** is seen to have a lower portion represented generally at **82** which is supported upon the floor and includes a rectangular continuous bottom surface **84** downwardly from the corners of which floor engaging adjustable foot components are provided. Three of these components are shown at **86**–**88**, while the upward portion of the fourth thereof is seen at **89**.

Vertiv Ex. 1013
Vertiv v. Valtrus

Extending upwardly from the bottom **84** are side portions provided as panels **90–93**. A single, rather large rectangular opening is formed within the end or shorter side panels **90** and **92** as represented, respectively, at **96** and **97**. In similar fashion, lengthwise panel **91** is seen to have two spaced-apart openings **98** and **99** formed therein and oppositely disposed parallel side panel **93** is formed having rectangular openings **100** and **101** arranged in aligning symmetry with respect to openings **98** and **99**. Panels **90–93** extend to respective top edges **104–107** whereupon they are bent to extend outwardly and upwardly to develop a connector flange structure form of floor tile suppot represented in general at **110** and having upstanding connector flanges **112–115**. Spaced connector holes are seen located within these connector flanges **112–115** which are used to receive floor module interconnecting nut and bolt assemblies. Positioned between the upper panel edges **105** and **107** is a cross-over support **118** which is used not only to provide structural support for panels **91** and **93**, but also to serve as a rest for one edge of each floor tile of the two such floor tiles utilized with each module. The floor tiles, not shown, which are positioned over the connector flange structure **110**, in general, mutually abut over the cross-over support **18**. To improve their noise free positioning, a thin elastomeric gasket (not shown) may be positioned over the horizontal offset portions extending outwardly from top edges **104–107**. Small holes are provided in conjunction with each of the openings **96–101** for the purpose of receiving machine screws holding sheet metal panels which serve to selectively close off these openings depending upon the form of air path desired within such systems as at **10**. In effect, each of the modules as at **80** provides a discrete cavity therewithin as represented generally at **120**.

Referring to FIG. **3**, typical uses for such cavities as at **120** are revealed. In the figure, the floor tiles **51** and **57** are seen to be removed from module **38** to reveal an air cooling arrangement. In this regard, note that an air filter **122** is shown in broken away fashion to reveal a cooling coil **124** positioned immediately beneath it. For the embodiment shown and for installations generally encountered, the type of cooling provided by coil **124** is based upon chilled water or appropriate fluid. Thus, conduiting is extended to the coil **124** as represented by conduit **126** extending to a T connection **128** which, in turn, is coupled to a feeder input **130** which, typically, will be connected to an externally disposed (outdoor) chiller component. Line **130** also is seen to extend into floor module **36** for purposes of providing chilled water to a similar air cooling coil within adjacent floor module **37**. Return water from the coil **124** is provided through conduit **132** which, in turn, extends to T **134** and to output line **136**. Line **136** extends to a waste water disposal outlet within the building within which system **10** is installed. Line **136** also provides the similar return function with respect to the cooling coil of module **37**. Control over chilled water input to the coil **124** for the instant embodiment is provided by a relatively simple vacuum or pneumatically based valve represented generally at **138** which is located within the cavity **140** of floor module **38** in combination with filter **122** and coil **124**. Because of the relatively small temperature difference between the cooled air from coil **124** and ambient air temperature, a simple control of this nature becomes available. Immediately beneath the valve **138** within cavity **140** is a flexible hose **142** which extends from a condensate pump **144** outwardly from the system **10** for disposal as waste water. A similar flexible hose **146** is seen extending outwardly from the system. Hose **146** is associated with the cooling coil mounted within floor module **37**.

Also disposed within discrete cavity **140** of floor module **38** is an air blower fan **148** which, in turn, is driven from an electric motor **150**. By blocking the air transfer openings, for example as described at **98**, **99**, **100** and **101** in FIG. **2**, as they are provided at floor module **38** as well as blocking the opening, for example corresponding to opening **96** in FIG. **2** adjacent coil **124** and inserting appropriate gaskets, the input of blower **148** will establish an air flow path extending through the openings within floor tile **51** (FIG. **1**), thence through the coil **124** to the input of blower **150** and thence as pressurized from the output thereof to exit through the mutually disposed panel openings at the abutting juncture of floor modules **38** and **39**. To further define the air flow path, the corresponding panel openings of floor module **39** are blocked such that the discrete chamber **152** thereof becomes a plenum and cooled air may exit through an opening therein formed identically to that shown at **56** in floor tile **54**. The blowers as at **148** may provide, as a minimum, about 450 cubic feet per minute of air movement. In addition to the panel openings at the elongate sides of floor module **39** being closed, the discrete cavity **152** of module **39** also contains an uninterruptible power supply (UPS) **154** which, preferably, is of a capacity wherein it is dedicated to the computer system component **12**. In this regard, the device **154** may have a capacity, for example, of 3 KVA. As noted in connection with module **36**, UPS **154** has an upwardly disposed switching and readout panel **156** which is located directly beneath an access door as described at **53** in conjunction with tile **52**.

Floor module **40** is bolted to floor module **39** along adjacent portions of their connector flange structures as described in connection with FIG. **2**. Module **40** is provided having a power distribution network **160** formed within the discrete cavity **162** thereof. The network **160** is coupled to the utility feeder inputs, for example, represented at cable **164** and provides a circuit breaker function including circuit breakers **166** and plug connector outlets represented generally at **168**. These outlets at **168** provide discrete power inputs as shown at cables **170** and **172** to the UPS components within respective floor modules **39** and **36**. Additionally, power is supplied, as represented at lines **17 4** and **176**, to the fan motors within respective floor modules **38** and **37**. One distribution network as at **160**, with 100 ampere service, in general may serve up to six computer components, for example employing dedicated UPS components, condensation pumps, and blower drive motors. Thus, one main breaker and seven branch breakers are employed with the unit. In the latter regard, six of the breakers are operationally associated with computer components while one such breaker services all fan and condensation pump motors utilized.

Certain of the floor modules of the system **10** serve a storage function retaining servicing tools and the like. For the system shown at **10**, such a function is assigned to floor module **41** which is bolted at abutting flange connector assemblies adjacent modules **38** and **40**. The discrete cavity **180** of module **41** is seen to contain a ramp assemblage formed of two ramps **182** and **184** which, in turn, are formed of hinged ramp members which may be folded as depicted to fit within the confines of cavity **180** and beneath, for example, the cross-over supporting member **186**. Also contained in the cavity **180** is a socket wrench **188** which is employed for adjusting the floor engaging foot components as described in connection with FIG. **2** at **86–89**. Certain of these foot components are seen in FIG. **3**, for example, at **190** at the four corners of each of the floor modules. Modules **36** and **37** are connected to and abut against corresponding

respective modules **39** and **38**, and are selected having identical functions for supporting computer system component **12'**.

Referring to FIG. **4**, the architecture involving the connecting of two modules **36** and **37** together is revealed in sectional detail. Note that the abutting upstanding connector flanges **200** and **202** of respective floor modules **36** and **37** are bolted together as represented by bolt connector **204**. Flanges **200** and **202** correspond with those described at **112** and **114** in FIG. **2**, three bolted connections being employed. When so connected, the adjacent side panels shown respectively at **206** and **208** are spaced apart to define a gap between the abutting floor modules **36** and **37**. This structuring developed from the offset nature of the connector flange assembly facilitates the leveling of modules **36** and **37** to achieve a level floor surface **32**. It additionally may be observed that the connector structures accommodate for the shape of the floor tiles. Note in this regard that floor tiles **54** and **55** mutually abut over the upstanding flanges **200** and **202**. To achieve this abutment, it may be observed that the peripheries of all of the floor tiles are formed having double offsets, one offset serving for the instant embodiment as the connective or abutting surface for load transmission, while the next offset surface extending to an uppermost abutting edge. At the center of the floor modules, the floor tiles rest upon a cross-over support as earlier-described in connection with FIG. **2** at **118**. Such cross-over supports are shown at **212** and **214** in connection with respective floor modules **36** and **37**. As before, the abutting edges of the floor tiles are in mutual contact, while the lower offset supporting surfaces rest upon supports as at **212** and **214**. At the outside edges of the system **10**, the outer abutting edges of the tiles, for example tiles **50** and **52**, are covered by kick panel **66** in the case of tile **50** and **216** in the case of tile **52**.

Looking to the operational components and their association within the paired floor modules **36** and **37**, the discrete cavity **218** of floor module **37** is seen to incorporate the cooling coil **220** of an air chiller system. Above coil **220** is a filter which is located immediately beneath floor tile **50**. Floor tile **50** incorporates a plurality of air duct openings represented at **224**. Immediately beneath the coil **220** is a condensate collection pan **226** which is slanted downwardly to provide a condensate receiving region **228** within which a condensate pump **230** is located. Concerning the presence of condensation, coil **220** preferably is designed such that only a minimal occasion for condensation development is present. In this regard, the range of incoming fluid temperatures to the coil will be from, for example, 45° F. to as high as 60° F. In designing the coil, an operational envelope is chosen with respect to the number of rows and area of the coil that, for essentially most room conditions, the coil will remain dry. However, in certain geographic areas, the humidity levels are so high that the condensate pan **226** will be utilized. In general, the pump **230** is arranged to turn on when a float actuated switch therein responds to about 0.75 inch of water within the region **228**.

Positioned forwardly within the discrete chamber **218** of floor module **37** is a blower fan **232** having an input at **234** and an output at **236**. Driven by an electric motor (not shown), similar to that described at **150** in FIG. **3**, the fan **232** establishes an air flow path as represented by the arrows in the drawing. In this regard, air is drawn through the air duct openings **224** of floor tile **50** as represented at arrows **240** and thence through the filter **222** and cooling coil **220**. Then, the air, as represented, for example at arrow **242**, enters the input of blower **234** and exits from the output **236** thereof as represented at arrow **244**. Arrows **244** represent that the air is drawn through adjacent openings of the side panels of floor modules **36** and **37** at the gap **210**. To assure the integrity of this air path for the present embodiment, elongate foamaceous and elastomeric gaskets **246** and **248** are positioned at the top and bottom of gap **210**. The air then enters the discrete cavity **250** of floor module **36** and exits, as represented by arrow **252**, through opening **56** into the appropriate receiving base region of computer system component **12'**. Air blower and motor combinations also can be installed within a floor module to direct air outwardly from a panel opening at an elongate module side.

The discrete cavity **250** of floor module **36** additionally includes a dedicated uninterruptible power supply (UPS) **254** having power input at cable **172** and a conditioned output which is coupled to component **12'**, for example via cable **256** which extends through the air outlet opening **56**. Note, as represented by arrow **258**, that the arrangement permits the flowing of air across the UPS device **254** to aid in heat removal therefrom.

The air paths thus described are defined by gasketing and the selective closure of the panel openings as earlier described at **96–101** in connection with FIG. **2**. In this regard, the enclosure of the outside widthwise opening **260** of floor module **36** is by a thin sheet metal panel cover **262** which is connected to the module by sheet metal screws. That particular edge of the system **10** is considered to be unobservable being, for example, positioned adjacent a wall or the like. The correspondingly opposite end of the arrangement, for example opening **264** within floor module **37**, is closed by side panel or side fascia **58**. Select ones of the intervening openings are closed with panels as at **262**. For example, these openings will include those shown at **266** and **268** at floor module **37**. The oppositely disposed openings of module **37** also are covered in the same manner. However, to provide for the air path as represented at arrow **244**, openings **270** and **272** remain uncovered. In the case of floor module **36**, outboard openings **274** and **276** are closed, however, the openings disposed oppositely therefrom are open to permit air flow toward a discrete cavity **162** of floor module **40** as described in conjunction with FIG. **3**. This permits a modicum of heat removal with respect to that component. However, all panel openings of the storage model **41** described in that figure are blocked.

Turning to FIG. **5**, the interrelationship of the floor modules of system **10** again is represented. Note that the internal cavity **280** of outboard floor module **35** is enclosed on one side by external panel **60** and the remaining openings thereof are closed by covers, for example as at **282** and **284**. Modules **35** and **36** are bolted together at their upstanding connector flanges to provide a coupling represented generally at **286**. Note that opposite cover **284**, the discrete cavity **250** of floor module **36** is blocked by a cover **288** to define a gap **290**. No gaskets or the like are provided within the gap **290** inasmuch as no air path definition is required. Floor module **35** functions to provide access floor space for the users of the computer center.

The upstanding flange components of floor modules **36** and **39**, as they occur longitudinally therebetween are bolted together to define a coupling represented generally at **292** providing a gap **294**. Oppositely disposed side openings of modules **36** and **39** at gap **294** remain open and the air path therebetween is established by spaced foamaceous elastomeric gaskets **296** and **298**. Similarly, the abutting upstanding flanges along the corresponding longitudinal edges of floor modules **39** and **40** are joined together at a coupling represented generally at **300** to define a gap **302**. To provide for the earlier-noted air flow about distribution network **160**,

the panel openings adjacent gap **302** are not blocked and the air path therebetween further is defined by elastomeric foam gaskets **305** and **306**. It may be observed that the gaskets at **305** and **306** or **296** and **298** as well as those described in connection with FIG. **4** permit movement between adjacently coupled floor modules while still providing for the definition of air flow paths cool air is directed to component **12** through outlet **299** in floor tile **54**. In general, the panel openings within the entire periphery of the assemblage or system **10** will be blocked either by covers or fascia boards, the latter being described, for example, at **58** and **60**. External panels are provided, as shown in FIG. **4** at **262** or at FIG. **5** at **308**. To provide for the pneumatic integrity of the discrete cavity **162** of floor module **40** at the point of entry of cooling fluid and electrical utility input, an external conduit port **312** may be included with such panels as at **306**. The upper kick panels generally are provided around the entire assemblage, one such side kick panel being shown at **310** in FIG. **5**.

Considering the leveling procedure itself, reference is made to FIG. **6** where one embodiment of a foot component **190** of a leveling component, for example as used in conjunction with floor module **41**, is displayed. Foot component **190** is seen to include a floor engaging lower foot **320** which is coupled to an elongate threaded stud **322** which extends to an integrally formed hexagonal nut portion **324**. Stud **322** is threadably engaged within a threaded bearing block **326** which, in turn, is welded to a box-shaped steel support represented generally at **328** and welded to the bottom **330** and corner-defining sides of module **41**. Thus, employing an elongated wrench as at **188** as shown in FIG. **3**, the installer may rotate the stud **322** from nut portion **324** to move the assemblage **190** inwardly through an opening **332** formed within bottom surface **330**. This arrangement permits the bottom surface of at least one of the floor modules to be positioned directly against the supporting floor to assure that the elevated floor surface **32** of the assemblage **10** is at a minimum height, for example, about 10 inches. Where greater elevated floor surface heights are available, then the foot **320** of the assemblies may be normally positioned below the bottom surface **330**, an arrangement which is less expensive but which promotes greater elevated floor surface heights. For the latter applications, the cavity defining structure **328** is replaced, for example, by a solid steel component which may have a cross section which is round or rectangular depending upon the desires of the user.

An advantage of the modular assemblage of components of the system **10** resides in a capability for rearranging the floor modules depending upon changing processing requirements and/or changes in the geometry of the floor region available for the data center function. These alterations may require the movement of computer system components as at **12** off of and on to the elevated floor surface **32**. Because a using entity typically will not have rigging equipment or the like to move these components about and only limited storage capacity, the instant system provides the foldable ramp assemblage which has been described as being storable within the discrete cavity of an otherwise "empty" floor module as at **41**. In general, the components themselves are movable upon casters or wheels as described in conjunction with FIG. **1**, for example at **20–23**. Additionally, the computer system components **12** may have an expected maximum specified weight of about 1800 pounds. Manufacturers further recommend that movement to the elevated floor surfaces **32** be along an inclined ramp or the like having about a 1:8 inclination. Thus, for the nominal 2 ft.×4 ft. size of the floor modules of the invention, a ramp pair is provided which is foldable to fit within the lengthwise extent of a given floor module. Looking to FIG. **7**, the racks **182** and **184** are shown operationally positioned with respect to the system **10**. Accordingly, the same numeration provided in the figures heretofore described is supplied, where appropriate, in the figure. These ramps are identically structured, in this regard, ramp **182** is formed of two upwardly facing channel members **340** and **342**. Members **340** and **342** are hingedly coupled together at a hinge **344** and one such member, for example ramp member **340**, is configured having two oppositely disposed L-shaped brackets **346** and **348** extending downwardly therefrom. The outward flange of each of these L-shaped brackets **346** and **348** is configured to threadably retain a foot assembly as shown, respectively, at **350** and **352**. Assemblies **350** and **352** may be structured in the same manner as the foot structure including foot **320**, threaded stud **322**, and hex nut portion **324** described in connection with FIG. **6**. That end of ramp member **342** opposite hinge **344** is, in turn, pivotally coupled to channel shaped bridging member **354** at a hinge connection **356**. Bridging member **354** is of a length serving to span over a removed floor tile which, for the instant demonstration, would have been floor tile **51** as described in FIG. **1**. The end of the bridging member **354** oppositely disposed from hinge **356** is seen to rest upon the next adjacent floor tile **57**. Bridging member **354** additionally is coupled to a downwardly depending flange engaging coupler represented at **358** which serves to stabilize the ramp **182**.

Ramp **184** is identically structured, including ramp members **362** and **364** which are hinged together at a hinge connection **366**. The extended ramp is supported at the hinge connection **366** by assemblies formed of L-shaped bracket members **368** and **370** which, in turn, support floor engaging foot assemblies represented, respectively, at **372** and **374**. As represented additionally in FIG. **8**, a bridging member **376** is pivotally connected to one end of ramp member **364** at hinge **378**. As before, bridging member **376** spans the region encompassed by the necessarily removed floor tile. A flange engaging coupler is provided, as shown in general at **380**, which is seen to be formed of downwardly depending bifurcate members which extend over the upstanding connector flange **382** (FIG. **8**) as well as kick panel **66**. Ramps **182** and **184** are positioned so as to be aligned for the reception initially of casters **21** and **22** and then casters **20** and **23** of computer system component **12**.

The configuration of FIG. **1** represents a somewhat minimal one for the purpose of operationally supporting two computer system components as at **12** and **12'**. With this configuration, the accessing of supporting floor modules containing equipment for conditioning air, or UPS systems requires that the computer system components be moved to clear the appropriate region for floor tile removal and access. While the components for conditioning air and UPS systems have a high reliability and a corresponding long mean time between failures, for many installations it is desirable that the floor tiles over such components be removable without any requirement for temporarily relocating the computer system components. With the addition of only one empty floor module, such a feature is accomplished. Referring to FIG. **9**, an assemblage of nine floor modules achieving this desirable aspect is revealed, in general, at **390**. Assemblage **390** is seen to operationally support two computer system components **392** and **394** in a manner wherein the floor modules beneath the components are empty, i.e. do not contain operation supporting instrumentalities. With the arrangement shown, a sequence of three floor modules

396–398 are coupled end to end as a linear array and against one side of this array there are positioned and connected a side-by-side array of six floor modules 400–405. Components 392 and 394 are located over empty floor modules 401–404, those modules being customized to this combination only by gaskets and the select closure of panel openings as described earlier. Positioned outwardly and readily accessible through their associated floor tiles, floor modules 397 and 398 are configured for developing conditioned air in the same manner as modules 37 and 38 heretofore described. The preferred direction for the outlet of the air circulation blowers within floor modules 397 and 398, respectively, is represented by the arrows 434 and 436. This is achieved by the relatively simple expedient of turning the fan assemblage, for example motor 150 and blower 148 as shown in FIG. 3 by 90°. Similarly, floor module 396 is configured for retaining a power distribution network and is structured identically as module 40. The power distribution network is represented in dashed form at 408. Air path development with modules 396–398 is provided initially by the closure of all panel openings about the outer periphery of the assemblage 390. Additionally, the panel openings are blocked at the connecting sides of the modules as represented at 410 and 412. Correspondingly, the panel openings are closed at the abutting sides 414, 416, and 418. The latter blockages may be observed to cover one-half of the panel openings within modules 396–398. Floor modules 400 and 405 each carry a dedicated uninterruptible power supply as represented, respectively, at 422 and 424. As noted earlier, for the present embodiment it is desirable to circulate some of the cooled air towards those UPS devices. Accordingly, the panel openings in the abutting sides between modules 404 and 405 as represented at 416 remain unblocked as do the sides between modules 400 and 401 represented at 428. Similarly, the sides abutting between modules 401 and 402 as at 430 are unblocked, while the sides represented at 432 between modules 402 and 403 are blocked. With the arrangement shown, two distinct air zones occur, one dedicated to the computer system component 392 and its associated UPS component 422 as well as the power distribution component 408. Computer system component 394 receives conditioned air from module 398 and that air also is directed to its dedicated UPS component 424. Floor tiles carrying outlet openings 436 and 437 are seen located in respective floor modules 402 and 404. This is for an orientation where the forward or facing surface of the computer components 392 and 394 are away from the triad of floor modules 396–398. Where the components 392 and 394 are positioned to face the opposite direction, then the floor tiles carrying outlet openings 436 and 437 would be positioned at the opposite location within the respective modules 402 and 404.

Looking to FIG. 10, the flexibility of the system at hand is illustrated in conjunction with an assemblage 440 of side-by-side computer system components 442, 443; 444, 445; and 446, 447. Of interest, the assemblage 440 provides support for these three pairs of components within a floor area having two columns or similar obstructions as represented at 450 and 452. Floor module assemblage 440 is made up of 15 floor modules identified at 452–466.

Within the assemblage 440, module 458 retains a power distribution network as represented by the dashed boundary 470. This is the same network as described at 160 in connection with FIG. 3 and provides power distribution to six computer system components and their associated blower fan motors. Network 470 is cooled by conditioned air which also functions to cool computer system component 442. Component 443 is seen to be positioned over empty floor module 456 as well as module 453 containing UPS apparatus 472. In this regard, one floor tile of floor module 453 is arranged so as to provide an air outlet as represented in dashed fashion at 474. Conditioned air for these modules is developed from module 455 having an air blower arrangement configured to blow air in the direction generally represented by arrow 476, which is seen to extend through an open panel within module 456, then as represented by arrows 478 and 480 to the air outlet 474 and the UPS component 472. Panel openings are blocked along the elongate side of module 456 as it abuts with module 458. Additionally, panel openings at the abutting widthwise edges of floor modules 452 and 453 are blocked to achieve the noted air pathway.

Computer system component 442 is serviced by the conditioned air provided by floor module 457, the blower fans of which are oriented to provide an output as represented at arrow 482, the panel opening at that location being unblocked, while all other panel openings of the module are blocked. Air path arrow 482 is seen being directed towards the air flow outlet 484 located within floor module 452. That floor module also retains a UPS system represented at 486 which, as shown by arrow 488, also is subjected to some of the conditioned air flow. In addition to the component 442 and UPS system 486, conditioned air module 457 also supplies air circulation about power distribution network 470 as represented at arrow 492. Network 470, as described in connection with module 40 in FIG. 3, retains sufficient capacity to provide circuit breaker protected service to each of the UPS systems, as well as to the blower fan and condensation pump motor within the assemblage 440.

Computer system component 444 is serviced with conditioned air from floor module 454 as represented at arrow 494. The air path thus is developed through a panel opening adjacent module 460 which also includes an air outlet 496 and a UPS device 498. Circulation of air to device 498 is represented at arrow 500. With the exception of the open panel located to confront arrow 494, all panel openings of floor module 460 are blocked.

Computer system component 445 receives conditioned air from floor module 460 as represented by arrow 502 indicating a pathway to air outlet 504. To establish the appropriate air path, all panel openings of the module 466 are closed except at confronting arrow 502. Additionally, as represented by arrow 506, air is circulated about UPS device 508 which is located within module 461. Module 465 is empty and provides for a continuous floor surface. The module is located adjacent to one end of floor module 464 which contains a coil for producing conditioned air and a blower fan which is oriented within the module to direct air in the direction indicated by arrow 510 toward air outlet 5 12 within adjacently disposed floor module 468. As represented by arrow 514, air also is circulated to a UPS device 516 within module 468. To develop the air path shown, all panel openings are blocked with the exception of those within modules 464 and 468 which confront the arrow or path 510.

Computer system component 447 receives conditioned air from the cooling coil and blower components within floor module 463. For this embodiment, however, two blower fans may be installed within the module 463, one oriented to direct air along the arrow 518 toward air outlet 520 within module 467. That air flow, as represented at arrow 522 also provides an air path to UPS device 524 within module 467. To provide for the air flow thus described, the side panel openings confronting the air path represented at line 518 are open. A second blower fan within module 463 also provides

an air flow as represented at arrow **526** into floor module **462**. Floor module **462** contains two assemblages of storage batteries **528** and **529** which function to add operational time to one or more of the UPS devices within the assemblage **440**. These batteries are sealed such that in normal operation no hydrogen gas leakage occurs. To provide the air path to module **462**, the side panel openings confronting arrow **526** are open within floor modules **462** and **463** while all other side panel openings within floor module **462** are blocked. A dual blower assemblage is revealed later herein in connection with FIG. **14**.

Referring to FIG. **11**, another embodiment of the system of the invention is represented in general at **540** supporting two adjacently positioned computer system components as shown at **542** and in phantom outline at **544**. Components **542** and **544** are supported by caster wheels upon the even elevated floor surface **546** of an assemblage **548** of interconnected floor modules **550–557**. These floor modules are dimensioned, for example, having at top surface dimension suited for retaining two 2 ft.×4 ft. floor tiles in the same manner as described above in connection with FIGS. **1** and **2**. In particular, the supporting functions of the assemblage **548** are identical to those described in connection with FIGS. **1–3**, for example floor modules **550** and **551** supporting cooling coils and one or more fan blowers, while end connected modules **552** and **553** provide air outlets and UPS devices. Similarly, one other module of the grouping thereof including modules **554–557** contain a power distribution network with circuit breaker protection.

In general, the floor modules **550–557** are structured essentially identically as those described at **34–41** in FIGS. **1** et seq. However, the height of elevated floor surface **546** will be slightly greater than the corresponding floor surfaces of the earlier embodiment. Referring momentarily to FIG. **12**, a floor module frame as is employed with the instant assemblage **548** is represented in general at **560**. Module frame **560** includes a lower portion having a continuous bottom surface **562** from which extend four side panels **564–567** incorporating generally rectangular panel openings **570–575**. The side panels **564–576** extend upwardly to top edges which, in turn, support a connector flange structure represented generally at **578** having offset, vertically oriented upstanding connector flanges **580–583**. A cross-over support **586** provides for side panel stability and also serves as a partial seat for one edge of the abutting floor tiles used with module **560**. In general, the dimensions of the module frame **560** from bottom surface **562** to the connector flange structure **578** are the same as in the earlier embodiment. However, the resulting floor module with associated floor tiles will stand higher above a given floor surface in consequence of the structuring of the floor engaging foot components **588–591** extending downwardly from bottom surface **562**. While structured similarly to the component **41** described in connection with FIG. **6**, the foot portions as described at **320** in FIG. **6** always are located beneath bottom surface **562**, and do not retract through an opening such as at **332** shown in FIG. **6**. This provides for a substantial fabrication cost reduction. In FIG. **12**, exemplary foot component **588** is seen to incorporate a threaded bearing block **594** which is welded to the module at one corner of bottom surface **562**. Extending through this block **594** is a component identical to that shown in FIG. **6** including a threaded stud **596** extending upwardly to a hex nut portion **598**. However, the foot, for example, as seen at **600** in connection with component **591**, remains below bottom surface **562**. With that exception, the leveling devices perform in the same manner as the embodiments represented in FIG. **6**.

Returning to FIG. **11**, it may be observed that the assemblage **540** also includes a sequence of modular step structures **602–606**. These step structures **602–606** are seen to be positioned in abutting adjacency against the sides **608** and **610** of assemblage **548** and serve initially to compensate for the greater height of elevated floor surface **546** by providing a step access to that floor surface. However, step structures **602–606** also serve the substantially advantageous function of retaining the cooling fluid conduits servicing the air cooling coils which, for the instant embodiment, are retained within floor modules **550** and **551** in adjacency with side **608** of the assemblage **548**. This arrangement serves to facilitate the maintenance of those components and to clearly isolate fluid carrying conduits from electrical conduits. In this regard, the figure shows flexible chill water and return conduits or hoses **612** and **614** extending into the step structures **602** and **603**. The conduits are tapped by "T" connectors for supplying the first cooling coil within floor module **551** and then extend to a corresponding connector (not shown) to provide fluid servicing to the cooling coil within floor module **550**. Corner step structure **604** is seen to retain a condensate pump **618** having a flexible input conduit **620** extending through T connector **622** to the condensate drain pan of the cooling system within module **550** and to a similar drain pan connection **624** associated with the condensate collection pan within floor module **551**. The output of pump **618** is coupled to an exhaust conduit **626** which extends through step structures **605** and **606** to an appropriate drain outlet within the facility within which system **540** is located.

Returning to FIG. **12**, two exemplary step structure frames **630** and **632** are shown in association with floor module frame **560**. Structure frame **630** has a generally inverted U shaped configuration with oppositely disposed floor supported side members **634** and **636** which extend upwardly a step height to a top or step surface **638**. As is apparent, the height of the structure is less than that of the elevated floor surface **546**. Side member **634** is formed having two openings **640** and **642** extending to the floor surface, the outer edges of which are adjacent to inward depending flanges **644–646** to which respective floor engaging foot components shown, respectively, at **648** and **650** are thread ably mounted. Additionally positioned at side member **634** are elongate vertical slots **652–655** which are located in alignment with respectively associated holes **657–660** formed within side **565** of floor module frame **560**.

Side **636** of the step structure frame **630** is formed having two side openings **662** and **664** and additionally includes an inwardly depending flange **666** from which three threadably engaged and adjustable floor engaging foot structures **668**, **669**, and **670** depend. With the arrangement shown, the step structure frame **630** may be bolted to floor module **560** through the use of bolt and nut connectors extending through the slots **652–655** into respective poles **657–660**. Slots **652–655** accommodate for floor variations Access to the step cavity **672** defined by the step structure frame **630** is provided through both end opening **674** and **675** and the side openings **662** and **664**.

Step corner module frame **632** serves, as shown at **604** in FIG. **11**, to provide a continuity of the step structure around a corner of assemblage **548** as well as to retain the condensate pump **618**. The structure includes two side portions **678** and **680** having access openings shown, respectively, at **682–683** formed therein and which extend to a top step surface **686**. Two connector flanges **688** and **690** extend downwardly from top surface **686** and incorporate spaced

bolt holes intended for bolting connection with corresponding bolt holes in the sides of modules such as at **630**. Two such holes are identified by alignment axes **692** and **694**. A foot component **696** is coupled to an inwardly depending flange (not shown) of the structure **632**.

Returning momentarily to FIG. **11**, it may be observed that the outwardly disposed sides of the step structures **602–606** are covered for aesthetic purposes by fascia panels or boards, certain of which are shown at **698** and **700**. Additionally, the top surfaces of the devices are covered, preferably, with tread material or the equivalent, some of which is shown at **702** and **704**, and a polymeric corner molding is located between the tread and side fascia panels, two such corner molding components being shown at **706** and **708**.

Referring to FIG. **13**, the interrelationship of the step structure and the assemblage of floor modules is shown in enhanced detail. In the figure, step structure **602** is shown in bolted connection with floor module **551** resting upon floor surface **720**. Floor tiles **722** and **724** are shown positioned upon the connector flange structure **726** of the floor module and over its cross-over support **728**. Air passageway defining openings are formed within the floor tile **722** as at **730** and immediately beneath these openings is an air filter **732**. Filter **732** is positioned above a chilled water coil **734** which, in turn, is positioned within the discrete cavity **736** of module **551** above a condensate collection pan **738**. Note that the pan **738** slopes downwardly from the interior of module **551** towards its outside edge which is adjacent step module **602**. This is the reverse of the earlier embodiment and accommodates for the collection of condensate fluid by flexible tubing **620** which is connected to the collector pan **730** at coupling **740**. Extending above the pan **738** to the coil **734** are the input and output chilled water conduits which are connected to metal feed and return tubes shown, respectively, at **742** and **744**. A pneumatically actuated valve **746** provides for temperature control in combination with a temperature sensing bulb-type actuator **748**.

Referring to FIG. **14**, an alternate blower fan assembly is shown within the cavity of module **551** at **752** as being mounted to side panel **754** with a mounting plate **756**. Two blower fans **758** and **760** are seen to be mounted upon plate **756** and are simultaneously driven from a centrally disposed electric motor **762**. As described in connection with FIGS. **9** and **10**, the air path defining orientation of the blower assembly **752** can be altered in two directions by 90°. In this regard, a 90° alteration in one direction is represented in phantom in the figure, showing mounting plate **756** at location **76'** in combination with blower fans **758** and **760** being shown at **758'** and **760'** in combination with motor **762** being shown at **762'**. The opposite orientation of the assembly **752** is shown with mounting plate **756** being positioned at **756"** against the opposite side of module **551**. This positions the blower fans as shown at **758"** and **760"** in combination with the motor at **762"**.

Returning to FIG. **13**, the foot structures as earlier-described in connection with FIG. **12** are shown at a higher level of detail, for example at **764–766**. Module **551** is seen coupled to module **552** in the manner earlier disclosed, i.e. by the attachment of upstanding abutting flanges **768** and **769**. This defines a gap **770** between the modules and the air flow path therebetween is further established through the selective utilization of elastomeric foam gaskets as at **772** and **774**.

Referring to FIG. **15**, an alternate embodiment for selectively blocking the side panel opening of the floor modules and for, where appropriate, establishing an air path is revealed. In the figure, a floor module **776** is connected to an adjacent floor module **778** at their abutting connector flange structures respectively represented generally at **780** and **782**. Thus, a gap **784** is developed between the modules. Within this gap **784**, there is positioned an elastomeric foam insert **786** which is configured having a partially cut-through or die cut knock-out insert corresponding with the shape of an associated oppositely disposed pair of panel openings. The die cut positioning in the figure is shown partially in dashed form at **788** and **790** adjacent the panel openings **792** and **794** of respective floor modules **776** and **778**.

With the higher structure involved in the instant embodiment, a space is located immediately beneath the gaps as at **784** as represented at **796**. This space advantageously may be employed for the purpose of routing coolant fluid lines to interior areas of more complex assemblages of floor modules. Such fluid carrying conduit is shown in the figure at **797** and **798**. By so positioning this fluid carrying function, it is separated from electrical conduit components. Alternately, electrical cables may be so distributed.

Looking to FIG. **16**, a floor module assemblage **810** is shown in plan view as it is associated with side positioned step structures **812** and **814**. The figure shows the advantageous isolation of cooling fluid carrying conduits from the electrical distribution lines within the assemblage **810**. In the figure, a sequence of ten adjacently disposed floor modules **816–825** are positioned such that their widthwise edges are coupled with side structure **812**. Of these floor modules, those at **817**, **818**; **820**, **821**; and **823**, **824** carry cooling coils and blower fan assemblies which are shown in phantom, respectively at **828– 833**. Connected with the floor modules **816–825** are corresponding power supply supporting floor modules **836–845**. Of these floor modules, those at **837**,**838**; **840**, **841**; and **843**, **844** carry UPS devices represented, respectively, at **848–853**. Those same modules also are provided with floor tiles carrying earlier-described air outlets over which computer system components are positioned. The outlets for the modules are represented, respectively, at **856–861**. Supplying power to the UPS components **848–853** is a power distribution network within floor module **836** as shown at **864**. The power distribution from network **864** to the UPS devices **848–853** is represented by dashed line **866**, while the corresponding power to blower fan assemblies **828–833** is represented at dashed line **868**. One other dashed line at **870** is shown as being directed to a condensation pump **872** at the corner component intermediate step structures **812** and **814**.

Liquid cooling inputs to the cooling coil assemblies in modules **817**, **818**; **820**, **821**; and **823**, **824** are provided from within step structure **812** as represented by the input and return dashed lines **874** and **876**. From the foregoing, it may be observed that there is an ideal separation between power distribution conduits and cooling fluid carrying conduits with the exception of the condensate pump **872** output represented at dashed line **878** within step structure **814** which is adjacent to the power input to that pump. However, the opportunity for liquid movement through the conduit represented by line **878** is quite remote for most installations.

Some installations of computer systems require their positioning not in an office environment but in somewhat harsh environments as may be encountered in the chemical or metals industries. Additionally, for some installations, dedicated fire protection for the computer components may be desired. Typically, for conventional sealed computer room installations, this fire protection is provided with

Halon gas based systems. In general, this gas is a fluorocarbon which has undesirable environmental-atmospheric effects upon its being released to the atmosphere. Accordingly, a restricted envelope which limits the extent of its use is desirable. Looking to FIG. **17**, an assemblage of floor modules identical to that, for example, shown in FIG. **1** is shown in general at **890**. The elevated floor surface shown generally at **892** for assemblage **890** is seen to support two side-by-side computer system components **894** and **895**. To protect these components **894** and **895** from harsh atmosphere and/or to confine them for dedicated fire protection purposes, an environmental confinement enclosure **898** is positioned over them and upon the outer edge of elevated floor surface **892**. Access to the computer system components **894** and **895** within this enclosure **898** is provided, for example, by sliding doors **900** and **902**. Additionally not shown in the figure is a Halon based fire protection system. It may be observed that a substantially smaller amount of this fluorocarbon gas is required for providing protection for components **894** and **895**, the enclosure **898** covering a floor surface, for example, of about 8 ft×8 ft with a height of, for example, 7 ft.

FIGS. **18–23** illustrate a preferred embodiment for the substructure assemblage of the invention. Looking to FIG. **18**, the assemblage is seen represented in general at **900** being formed of six floor modules **902–907** which are interconnected to form an elevated floor **910** of predetermined peripheral geometric shape. This shape is seen to provide four linear side portions **912–915**. Of these linear side portions, two, as at **914** and **915** are considered, for the present illustration, to be located in adjacency with a corner form of wall structure. The remaining two linear side portions as at **912** and **913** are each associated with step assemblies respectively represented in general at **918** and **920**. Of the floor modules **902–908**, module **902** is configured as dedicated to retain an uninterruptible power supply (UPS) and is shown to carry floor tiles **922** and **923**. Floor tile **922** is shown having a pattern of openings, however these openings are for the purpose of air discharge. Next adjacent to floor module **902** is floor module **903** which supports floor tiles **924** and **925**. Floor tile **924** also is formed having a pattern of air transfer openings or perforations and these are for the earlier-described purpose of providing air ingress to a cooling coil and air circulation blower assemblage to which function the floor module **903** is dedicated. Next adjacent to floor module **903** is floor module **904** which supports floor tiles **926** and **927**. Floor module **904** is dedicated to providing a power distribution with circuit breakers. Floor module **905** is seen supporting floor tiles **928** and **929** and may be employed for the purpose of retaining batteries for the UPS function within floor module **902** or a loading ramp as earlier described in conjunction with FIGS. **7** and **8**. Next adjacent to floor module **905** is a floor module **906** which supports a split floor tile assembly including a forward floor tile portion **930** and a rearward floor tile portion **931** within which an air outlet **932** is positioned. Air outlet **932** serves the same function, for example, as outlet **56** as shown in FIG. **1**. With the arrangement shown, split floor tiles **930** and **931** abut against each other at abutting line **934**. As a consequence, split tile **931** can be removed by servicing personnel without moving an adjacent computer system component, the base region of which is located over the opening **932**. It may be recalled that power input cabling and the like is directed to the computer component through the opening **932**. Positioned rearwardly of split tile **931** is a floor tile **935**.

Next adjacent to floor module **906**, floor module **907** is seen to support floor tiles **936** and **937**. As in the case of floor module **905**, floor module **907** may be empty or carry loading ramps or battery supplies for the UPS dedicated function of floor module **902**.

Step assmbly **918** is coupled to the end side portions of floor modules **902–904** and is configured having three step defining structures or components **940–942**. In similar fashion, step assembly **920** is formed within three step defining structures **944–946** of the same lengthwise extent as step defining structures **940–942**. Additionally, the assembly **920** includes a corner step defining structure **948**. Similar to the earlier embodiments, polymeric kick panels are provided above the step structures, certain of which are identified at **950**. For the present embodiment, the kick panels **950** are provided in discrete lengths corresponding with the side portions of the floor modules to which they are attached. Preferably, the step surfaces are covered with polymeric step treads to promote user safety.

Floor modules **902–907** are configured slightly differently than those modules heretofore described. Looking to FIG. **19**, the instant version of a floor module is represented in general at **952**. Module **952** has a lower portion **954** which includes a rectangular bottom surface **956** and four vertically adjustable floor engaging foot components, portions of which are seen at **958–961**. As before, the module **952** is configured as a frame having four side panels **964–967** which are bent upwardly from the bottom surface **956** and extend upwardly to edge portions shown, respectively, at **968–971**. Note in this regard that the edge portions are not configured having their earlier-described outwardly extending flange structures. However, each of the side panels is configured, as before, incorporating panel or access openings. In this regard, side portion **964** is seen to be formed having two panel or access openings **974** and **975**; side portion **965** is configured having corresponding panel openings **976** and **977**; side portion **966** is configured having a panel or access opening **978**; and side panel **967** is configured having access opening **979**. These openings **974–979** may be selectively blocked by sheet blocking panels (not shown) which are positioned upon the inside surfaces of the side panels **964–967** as desired. Securement is made by inwardly depending lances or tabs, certain of which are shown at **982** at the lower regions of the openings and, such panels are coupled adjacent the upper edges **968–971** by bolting utilizing the floor module-to-floor module interconnecting holes or openings, certain of which are identified at **984**.

A center or cross-over support **986** is provided with the module **952**. This support **986**, as in the case of the side panels, terminates upwardly in an edge portion as at **988**. The support **986** is retained in position by inwardly formed tabs or lances **990** and **992**, which engage the oppositely disposed fight angle oriented tips of support **986**.

In putting together an assemblage as at **900** of the floor modules **952**, the side portions or panels **964–967** are simply bolted together at the upwardly disposed matched openings **984**. This technique of interconnecting the floor modules is compared with the outwardly extending flange arrangement of the earlier embodiments. Utilization of the earlier external flanges provided a rugged and precise assemblage wherein the module flange dimensions were matched to the particular floor tile shapes provided by given suppliers. Another aspect of this design resides in its broad tolerances for variations from square and the like. With the instant embodiment, the high tolerancing earlier available momentarily is lost but then recovered through the utilization of tile supports or expanders which freely abuttably fit over the paired edge

portions **968–971** of adjacent floor modules. Additionally, these tile supports fit over the upper edge portions as at **988** of cross over supports **986**. This permits a more simple and thus more economical fabrication while again allowing for larger dimensional tolerances for the system. An edge expander or tile support as employed with the invention may be formed as a relatively simple extrusion, one of which is represented in the figure at **994** having an internally disposed channel **996** which fits over, for example, the upper edge portion **971**. These tile supports may be simply fabricated to match individual cross-sectional profiles of the floor tiles of various manufacturers. Along the outside perimeter of any assemblage as at **900**, where step assemblies as at **918** and **920** are provided, then floor tile support along those peripheries is provided by an inwardly depending flange associated with the step structures. For a periphery where the step structure is not present as at **914** and **915**, then a peripheral flange configured simply as an inwardly bent sheet is bolted through the openings **984**.

Looking additionally to FIG. **20**, a sectional and enlarged view showing the utilization of tile support or expander **994** with respect to adjacently coupled floor modules is provided. In the figure, the outwardly disposed surfaces of two adjoining side panels or side portions as at **1000** and **1002** are joined together by a nut and bolt connection **1004** extending through adjacently aligned openings **984**. This provides a paired edge portion arrangement represented generally at **1006**. The tile support or expander **994** is shown such that the paired edge portion **1006** is inserted within channel **996** to abut against an internally disposed contact surface **1008**. Surface **1008** is oppositely disposed from tile support surface **1010** which, in turn, supports the peripheral beating surfaces **1012** and **1014** of respective floor tiles **1016** and **1018**. Note that floor tiles **1016** and **1018** have a cross-sectional periphery which is different than the floor tiles described earlier herein. From the support surface **1012**, the support **994** is formed extending downwardly to provide two inwardly depending tab portions **1020** and **1022**, each of which is freely abuttably engageable with an inwardly disposed side surface of respective side portions or panels **1000** and **1002**. With the arrangement shown, force represented by floor weight transmitted from floor tile **1016** may be represented by force vector arrow **1024**. This creates a turning moment providing for a transfer of force somewhat horizontally as represented by vector arrow **1026**. Tolerancing movement of the floor tile **1016** against device **994** may be accommodated by twisting of the latter component in response to various forces, for example, as represented by arrow **1028**. Such forces will develop a corresponding slight slidable movement of the contact surface **1008** over the paired edge portions arrangement **1006** to provide a broadening of tolerancing. With the floor tiles in place over a floor module frame, a chamber is developed which may be employed for retaining a dedicated support facility such as the earlier-noted cooling coil and fan, UPS system, or power distribution network.

Referring to FIG. **21**, the interconnection of floor modules **902** and **905** is shown in cross-section. The figure shows floor module **902** to have a bottom surface **1040** supported above floor **1042** by vertically adjustable foot components, two of which are revealed at **1044** and **1046**. Locking panels **1048** and **1050** are seen as they cover panel openings (not shown). The panels, for example as at **1050**, are retained at their upper regions by bolt and nut connections as at **1052**, while the lower portions thereof are retained by tabs or lances earlier described in connection with FIG. **19** at **982** and one of which is revealed in FIG. **21** at **1054**. An uninterruptible power supply (UPS) **1056** is seen to be mounted within floor module **902**, the elongate side portion thereof being revealed in FIG. **21**. UPS **1056** is retained in position by flange components, one of which is revealed at **1058**, and is seen incorporating a self-contained cooling fan shown in phantom at **1060**. UPS **1056** does not utilize the cooling output of the cooling coils, for example within module **903**, but is self-sufficient in that regard. This arrangement is made, inasmuch as in the case of a utility power failure, it is desirable that the UPS **1056** continue to perform under battery power for as long as possible. Where the cooling features from module **903** are utilized to cool UPS **1056**, then that interval of available emergency power will be more limited. To isolate UPS **1056**, the floor module **902** includes a blocking panel assembly shown generally at **1062** which extends across its width rearwardly of UPS **1056**. In this regard, the panel **1062** includes a sheet metal frame **1064** which is attached to cross-over support **1066** and extends rearwardly thereof to provide an air path cavity **1068**. Panel **1064** has a centrally disposed opening over which a flexible polymeric curtain **1070** extends having a slit within it to flexibly receive and pass the plug and cable power input which extends from a power distribution network within floor module **904** to the rear side of UPS **1056**. The forward panel opening at **1076** of floor module **902** is unblocked and provides for both manual and air transfer access to forward face **1074** of UPS **1056**. The air circulation path established by UPS **1056** includes an air input opening in the form of a grill as seen at **1078** in FIG. **23**, which will have a designed air transferability capability. The air path developed by fan **1060** is shown in FIG. **21** at arrows **1080** extending through the air opening **1078** at forward side **1076**, thence through fan **1060** to exit from the air output thereof as represented at arrow **1082**, and then, as represented by arrows **1084**, the air exits through the opening pattern within floor tile **922**. Air input to UPS **1056** through the opening **1076** is provided through a cavity **1086** within step assembly **918** when in the closed orientation shown in solid line fashion in FIG. **21**. It may be observed that the step structure **918** includes a step base **1088** which rests upon floor **1042** and which is bolted to floor module **902**. In this regard, the base **1088** has a connector portion **1090** which is bolted to the side surface of floor module **902**. The base extends oppositely therefrom to an upstanding forward portion **1092** which supports a vertically adjustable step support assembly **1094**. Assembly **1094**, in turn, adjusts the height of the step surface **1096** of step defining structure **940**. That structure further includes a hinge assembly **1098** which is bolted to the side portion of floor panel **902** and a riser portion **1100** extending outwardly from the upstanding forward portion **1092** of step base **1088**. This defines an elongate air transfer opening **1102** permitting the development of an air input path represented at arrows **1104** when the step structure **918** is in its seated position. The structure is pivotable about hinge assembly **1098** as represented at **940'** in phantom. When in this open position, the forward hand actuable invisible control components of UPS **1056** as are illustrated in FIG. **23** at **1078** are readily accessible to servicing personnel.

FIG. **21** additionally reveals the interconnection of floor module **902** with floor module **905**. In this regard, a bolt and nut connection of the side portions of the floor modules is made at the openings along the upper region of the module sides. Once such bolt and nut assembly is shown at **1110** in conjunction with a tile support **1112** which is configured as described, for example, at **994** in FIG. **20**. Such connection places foot component **1046** of floor module **902** in adja-

cency with corresponding foot component **1114** of floor module **905**. These foot components preferably are fashioned as an earlier described floor engaging component having a threaded upstanding shaft which extends through and is threadably engaged with a nut structure as at **1116** in the case of foot component **1046** and **1118** in the case of foot component **1114**. The latter nut structures are welded to the bottom surfaces of the floor modules. On the inside of the floor modules, the upstanded threaded studs are retained in position by nuts which are tightened against the upward surface of the interior of the floor modules. Shown additionally in FIG. **21** is a polymeric, channel-shaped cable protector **1118** which fits over the upwardly depending and adjacent edges of the panel openings of the adjacent floor modules. This protects cabling such as at **1072**. Floor tile support at the periphery of the assemblage is provided by an angular sheet metal tile support **1113** forming part of step struture **940** as shown in the figure supporting the peripherally disposed edges of tile **922**.

Referring to FIG. **22**, the configuration of the step structure used with the floor module assemblage is revealed in more detail. The particular step structure shown is one including a corner as seen in FIG. **18** at **948** and which is similarly identified in the instant figure. Step **948** includes a step base represented generally at **1120** which includes a pan-like floor supported bottom surface **1122**. Bottom surface **1122** extends at one side to an upstanding connector portion **1124** having oppositely disposed slots **1126** and **1128** through which the connector portion **1124** is bolted to the side portion of a floor module. The elongate vertical slots **1126** and **1128** permit the step base to be floor supported, notwithstanding floor surface variations.

Bottom surface **1122** extends forwardly to an upstanding forward portion **1130** which, in turn, supports two spaced-apart vertically adjustable step support assemblies represented generally at **1132** and **1134**. Assemblies **1132** and **1134** are formed essentially identically as the foot supports for the floor modules but are mounted oppositely. In this regard, they include an upwardly-disposed contact surface portion **1136** from which there depends a threaded rod **1138** as shown in conjunction with assembly **1134**. The threaded rod carries a tightening nut **1140** and is threadably engaged with a nut **1142** welded to the inwardly depending flange **1144** of forward portion **1130**. Step support assembly **1132** is structured identically to that described at **1134**.

Step structure **948** is at a corner of the assembly and, accordingly, includes a step corner base shown at **1146** which may be bolted to base structure **1120**. Corner base **1146** is configured having a floor supported bottom surface **1148** which extends to two upstanding outer portions **1150** and **1152**. The inwardly-depending upper flange **1154** of outer portion **1152** serves to support two vertically adjustable step support assemblies **1156** and **1158** which are configured identically with the support assembly **1134**. Connection of the step corner base **1146** to corresponding base **1120** is at their mating end flanges, one of which is shown at **1160** in conjunction with upstanding portion **1130**. A bolting connection is made for uniting the two bases.

Looking at the step structure **948** for this corner assembly, a step surface as shown at **1162** is seen to extend to a riser **1164** as well as to an end riser **1166**. This riser combination **1164** and **1166** is vertically dimensioned to permit development of an air gap between the riser and the forward portions **1130** and **1150** of the respective base structures **1120** and **1146**. This gap is revealed in FIG. **23** at **1168**.

The inwardly disposed portion of step surface **1162** is coupled with a vertical offset sheet component **1170** which extends to a horizontally disposed hinge **1172**. The opposite side of hinge **1172** is provided as a flange **1174** having three spaced openings therein for bolted attachment to the side portion of a floor module as at **902** as well as an inwardly depending tile suppot portion. Additionally coupled through those openings is a kicker as described earlier at **950** and identified by the same numeration herein.

With the offset **1170**, the step defining structure **948** has a stable open position as demonstrated at **940'** in FIG. **21**. This permits servicing personnel to move a step defining structure from its seated to an open position, and it will remain stably at that open position while service procedures are being carded out.

Because the particular step structure **948** encompasses a step corner, the corner defining portion of it is buttressed with a box beam assembly shown generally at **1176**. Accordingly, the step support assembly **1158** will be at a lower elevation than the forward support assembly **1156**.

Turning to FIG. **23**, the highly desirable servicing access to the principal dedicated modules for UPS, cooling, and power distribution is illustrated. In the figure, UPS **1056** is shown, as well as the earlier-noted air intake or grill **1078** as well as any visual readouts or manually actuable control switches and the like. With the arrangement, ready access is provided for all forms of start-up and interim adjustment procedures without the need for, example, moving a floor tile. Further, access openings formed within the floor tiles are not required to permit an uninterrupted integrity of the floor surface. Next adjacent to the floor module **902** dedicated to a UPS service, is floor module **903** which incorporates a cooling coil and blower fan. The cooling coil adjustment and set-up components are readily accessible through the panel opening at the side portion of floor module **903**. As seen in the figure, the fittings made accessible to the service personnel include an input chill water conduit and associated fitting **1176**; a corresponding exit chill water conduit and fitting **1178**, and a condensate water coupling and associated conduit **1180**. A vent tube **1182** is incorporated within the conduit and fittings **1180** to facilitate the flow of condensate fluid from a drain pan (not shown) positioned beneath the coil. Condensate conduit **1180** is seen to be directed to a condensate pump retained within the step cavity defined by step component **1162**.

Hand actuable control over the operation of the cooling coil is provided by the hand setting dial **1186** of a thermostat having an output control line leading to a mixer valve **1188** coupled, in turn, to the chill water input conduit and coupling **1176**.

Experience with the operation of floor modules as at **903** within which a cooling coil and fan are mounted has demonstrated that the utilization of blocking panels to close access openings for the purpose of forming airflow guide paths is not necessary. In general, the same air flow quality and quantity is present at opening **932** (FIG. **18**) with or without the closure of access openings to establish air ducts leading to such openings.

Next adjacent to the cooling coil and blower retaining module **903** is a power distribution network dedicated floor module **904**. The power distribution network is shown within a console **1190** having an array of six circuit breakers **1192** providing protection over corresponding six computer system components. Additionally, a circuit breaker **1194** is dedicated to protection of cooling system fans and the condensate pump **1184**. Finally, a plug outlet is provided at **1196** for powering condensate pump **1184**. This is the only

electrical cable which is contained within the step cavity.

Since certain changes may be made in the above-described system and apparatus without departing from the scope of the invention herein involved, it is intended that all matter contained in the above description or shown in the accompanying drawings shall be interpreted as illustrative and not in a limiting sense.

I claim:

1. A floor supported substructure assemblage for a computer component having a given base peripheral configuration with a base region through which heat removing air may pass, said component having given operational heat generation and power consumption characteristics, comprising:

a plurality of floor modules, each having a lower portion supported upon said floor and having side portions with access openings, extending upwardly from said lower portion to support an elevated floor surface at a given floor height and defining a module chamber intermediate said lower portion and said elevated floor surface, said floor modules being arranged in a said assemblage of predetermined peripheral geometric shape including a linear side portion;

a said floor module having a said side portion forming said assemblage linear side portion, having a cooling coil mounted within said chamber thereof and having cooling fluid coupling components manually accessible through said access opening at said linear side portion, connectable with cooling fluid conduits, and said cooling coil being located within an input air path extending to an air intake;

the said elevated floor surface of a said floor module supporting said computer component and having an air outlet formed therein for providing air transfer communication with said base region;

a said floor module chamber retaining an air circulation blower having an input for receiving air from said input air path and an air flow output providing air cooled at said cooling coil to said air outlet;

a step assembly connected in adjacency with said assemblage at said linear side portion, having a step defining structure with a step surface located at a select height less than said floor module given floor height, said step defining structure being pivotally movable between a seated position supported by said floor and defining a step cavity and an open position providing manual access to said access opening at said linear side portion; and

said cooling fluid conduits being located within said step cavity and coupled with said cooling coil at said cooling fluid coupling components.

2. The substructure assemblage of claim **1** in which:

a said floor module having a said side portion forming said assemblage linear side portion includes a power distribution network mounted within said module chamber thereof, having an output connected in power supply relationship with said air circulation blower, and having a plurality of hand actuable circuit breakers manually accessible through a said access opening at said linear side portion; and

said circuit breakers being manually accessible through said access opening when said step defining structure is in said open position.

3. The substructure assemblage of claim **1** in which:

a said floor module having a said side portion forming said assemblage linear side portion includes an uninterruptible power supply mounted within said module chamber thereof, having an output capacity corresponding with said power consumption characteristic, having an output connected in power supply relationship with said computer component, having a hand actuable control component manually accessible through a said access opening at said linear side portion; and

said control component being manually accessible through said access opening when said step defining structure is in said open position.

4. The substructure assemblage of claim **3** in which:

said uninterruptible power supply includes a self-contained air circulation fan at one end having an air output, an air input opening of given air transferability extent at an opposite end adjacent to and in air transfer communication with said access opening at said linear side portion;

said step assembly defines an air transfer opening of air transferability extent at least equivalent with said given air transferability extent when said step defining structure is in said seated position' to form an air input to said air input opening; and

said floor module within which said uninterruptible power supply is mounted is configured to define an air flow path extending from said air input path to said air circulation fan and from said air output to the ambient environment external to said assemblage in substantial isolation from said air cooled at said cooling coil.

5. The substructure assemblage of claim **1** in which said step assembly includes:

a step base having a floor supported bottom surface extending to an upstanding connector portion connected with a said side portion of a said floor module located at said linear side portion and extending oppositely to an upstanding forward portion, said upstanding forward portion including a vertically adjustable step support assembly; and

said step defining structure includes a riser portion depending downwardly from said step surface and extending outwardly from said step base forward portion when in said seated position, a hinge assembly depending from said step surface and connected with a said side portion of a said floor module located at said linear side portion.

6. The substructure assemblage of claim **5** in which said step surface is supported and vertically positioned at said select height by abutment of said adjustable step support assembly with said step defining structure at a location beneath said step surface.

7. The substructure assemblage of claim **6** in which said adjustable step support assembly comprises at least two foot components having upwardly disposed contact surfaces abuttable with said step defining structure when in said seated position and being threadably engaged with and supported from said step base.

8. The substructure assemblage of claim **6** in which said step defining structure riser portion is located outwardly from said step base upstanding forward portion and above said floor supported bottom surface an amount effective to define an air transfer opening of predetermined extent when in said seated position.

9. The substructure assemblage of claim **1** in which:

each said floor module comprises:

a frame having a rectangular bottom surface at said lower portion and four side panels as said side portions, said

side panels extending from said bottom surface to an edge portion, defining four corners, having vertically oriented outwardly and inwardly disposed side surfaces, and having said access openings formed therein,

said lower portion further including a vertically adjustable floor engaging foot component mounted upon said frame in the vicinity of each said corner, and

at least one floor tile positionable upon said frame, having a downwardly depending peripheral bearing surface in load transfer relationship with said side panels through said edge portion.

10. The substructure assemblage of claim **9** in which:

said floor modules are arranged to form said assemblage such that select said side panels of adjacently disposed floor modules are in abutting adjacency; and

including a tile support positioned over paired said edge portions of adjacent said side panels, said tile support being supported from and extending along said paired edge portions and having an upwardly disposed support surface abuttably engaging a said floor tile peripheral bearing surface to transfer load therefrom to said paired edge portions.

11. The substructure assemblage of claim **10** in which said tile support is configured having a downwardly depending contact surface located substantially opposite said support surface slidably abuttably engageable in force transfer relationship with said paired edge portions, and two, mutually inwardly depending tab portions spaced downwardly from said contact surface and each freely abuttably engageable with a said inwardly disposed side surface.

12. The substructure assemblage of claim **1** including an environmental confinement enclosure positioned over said assemblage elevated floor surface, having side walls extending from said elevated floor surface to a top cover located above said computer system component, and having a normally closed access opening for accessing said computer system component.

13. The substructure assemblage of claim **9** in which:

said floor module lower portion bottom surface is rectangular and has a predetermined widthwise extent and a lengthwise extent substantially twice said widthwise extent;

including a crossover support extending between said side portions extending along said lengthwise extent; and

said elevated floor surface is provided as two substantially square said rigid floor tiles.

14. The substructure assemblage of claim **13** in which:

said computer system component is movably supported upon spaced apart wheels mounted at said base region; and

including a ramp assemblage comprising two ramps each formed of two ramp members foldably coupled together at a hinge connection, one end of a said ramp member being hingedly coupled with a bridging member extensible to and supportable upon a said floor tile at a location over said crossover support, each said ramp including a downwardly depending coupler configured for abuttable positioning over a said side portion, said ramps being positionable in spaced apart relationship corresponding with said spaced apart wheels for receiving said wheels and supporting said computer system component for movement on and off of said assemblage elevated floor surface.

15. A floor module for use in assembling a floor supported substructure configured to support a computer system component having given operational heat generation and power consumption characteristics, comprising:

a frame having a rectangular bottom surface and four side panels extending therefrom to an edge portion defining four corners and vertically oriented outwardly disposed and inwardly disposed side surfaces, said side panels having access openings formed therein;

a tile supoprt mounted upon and extending along said edge portion and having an upwardly disposed support surface;

a vertically adjustable floor engaging foot component mounted to said frame in the vicinity of each said corner;

at least one floor tile positionable upon said frame, having a downwardly depending peripheral bearing surface abuttably engageable with said support surface and defining a cavity with said frame; and

a blocking panel removably connectable with said side panel at said inwardly disposed side surface to cover an adjacent said access opening.

16. The floor module of claim **15** including connector openings formed extending through said side panels adjacent said edge portion.

17. The floor module of claim **15** in which said tile support is configured having a downwardly depending contact surface located substantially opposite said support surface, slidably abuttably engageable in force transfer relationship with said edge portion, and two, mutually inwardly depending, tab portions spaced downwardly from said contact surface and resiliently freely abuttably engageable with a said side surface.

18. The floor module of claim **15** in which:

said frame is configured for supporting two adjacently positioned said floor tiles having substantially square peripheries; and

including a crossover support extending between oppositely disposed side panels and having an edge portion at the level of said panel edge portion and located to receive load from the mutually adjacently disposed downwardly depending peripheral bearing surfaces of said two floor tiles.

19. The floor module of claim **15** including an air circulation blower mounted within said frame and having an upstream air inlet and an air output positioned adjacent a selective said access opening.

20. The floor module of claim **19** including a cooling coil having a cooling capacity corresponding with said operational heat generation characteristics mounted within said frame.

21. The floor module of claim **15** including:

an uninterruptible power supply mounted within said frame, having a self-contained air circulation fan at one end, an air input opening at an opposite end adjacent to and in air transfer communication with a select said air transfer opening, and having an output capacity corresponding with said power consumption characteristic;

said floor tile is configured having an air exit opening therein; and

said frame access openings are blocked to define a dedicated air circulation path extending from said select air transfer opening, through said uninterruptible power supply and out of said floor tile air exit opening.

22. The floor module of claim **15** including a power distribution network mounted within said frame, having circuit breaker protection with manually actuable circuit breaker switches at an end thereof positioned adjacent to be

accessible through a said access opening.

23. A floor supported substructure assemblage for a computer system component having a given base peripheral configuration with a base region through which heat removing air may pass, said system component having given operational heat generation and power consumption characteristics, comprising:

a plurality of floor modules, each having a lower portion supported upon said floor and having side portions extending upwardly therefrom to support an elevated floor surface at a given height and defining a discrete chamber intermediate said lower portion and said elevated floor surface, said floor modules being arranged in a said assemblage of predetermined peripheral geometric shape including a linear side portion;

a said floor module having a said side portion forming said assemblage linear side portion and having a cooling coil mounted within the said discrete chamber thereof connectable with cooling fluid conduits, and located within an input air path extending to an air intake adjacent thereto;

a step assembly supported upon said floor, having a riser portion extending upwardly a step height less than said floor module given height to a step surface, and defining a step cavity therewithin, said assembly being positioned in abutting adjacency with said assemblage linear side portion;

said cooling fluid conduits being located within said step cavity and coupled with said cooling coil;

the said elevated floor surface of a said floor module supporting said computer system component and having an air outlet formed therein for providing air transfer communication with said base region;

a said floor module discrete chamber retaining an air circulation blower having an input for receiving air from said input air path and an air flow output; and

an air flow path defined by at least one said discrete chamber extending from said blower air output to said air outlet.

24. The substructure assemblage of claim **23** including an environmental confinement enclosure positioned over said assemblage elevated floor surface, having side walls extending from said elevated floor surface to a top cover located above said computer system component, and having a normally closed access opening for accessing said computer system component.

25. The substructure assemblage of claim **23** in which:

said floor module lower portion bottom surface is rectangular and has a predetermined widthwise extent and a lengthwise extent substantially twice said widthwise extent;

including a crossover support extending between said side portions extending along said lengthwise extent; and

said elevated floor surface is provided as two substantially square said rigid floor tiles.

26. The substructure assemblage of claim **25** in which:

said computer system component is movably supported upon spaced apart wheels mounted at said base region;

including a ramp assemblage comprising two ramps each formed of two ramp members foldably coupled together at a hinge connection, one end of a said ramp member being hingedly coupled with a bridging member extensible to and supportable upon a said floor tile at a location over said crossover support, each said ramp including a downwardly depending coupler configured for abuttable positioning over a said side portion, said ramps being positionable in spaced apart relationship corresponding with said spaced apart wheels for receiving said wheels and supporting said computer system component for movement on and off of said assemblage elevated floor surface.

* * * * *