US 20060109256A1

(19) United States

(12) Patent Application Publication

(10) Pub. No.: US 2006/0109256 A1

(43) Pub. Date: May 25, 2006

Grant et al.

(54) HAPTIC FEEDBACK FOR BUTTON AND SCROLLING ACTION SIMULATION IN TOUCH INPUT DEVICES

(75) Inventors: **Danny A. Grant**, Montreal (CA); **Pedro Gregorio**, Verdun (CA); **Robert W. Heubel**, San Leandro, CA (US); **Christophe Ramstein**, San Francisco, CA (US)

Correspondence Address:
David B. Ritchie
Thelen Reid & Priest LLP
P.O. Box 640640
San Jose, CA 95164-0640 (US)

(73) Assignee: **Immersion Corporation, a Delaware Corporation**

(21) Appl. No.: **11/249,031**

(22) Filed: **Oct. 11, 2005**

Related U.S. Application Data

(60) Provisional application No. 60/616,648, filed on Oct. 8, 2004.

Publication Classification

(51) **Int. Cl.**
G09G 5/00 (2006.01)

(52) **U.S. Cl.** **345/173**

(57) **ABSTRACT**

A planar touch control is used to provide input to a computer and haptic feedback is provided thereto. A touch control includes a touch input device with a planar touch surface that inputs a position signal to a processor associated with the computer based on a location of user implemented contact on the touch surface. The computer can position or modify a cursor or image in a displayed graphical environment based at least in part on the position signal, or perform a different function. At least one actuator is also coupled to the touch input device and outputs a force to provide a haptic sensation to the user via the touch surface.

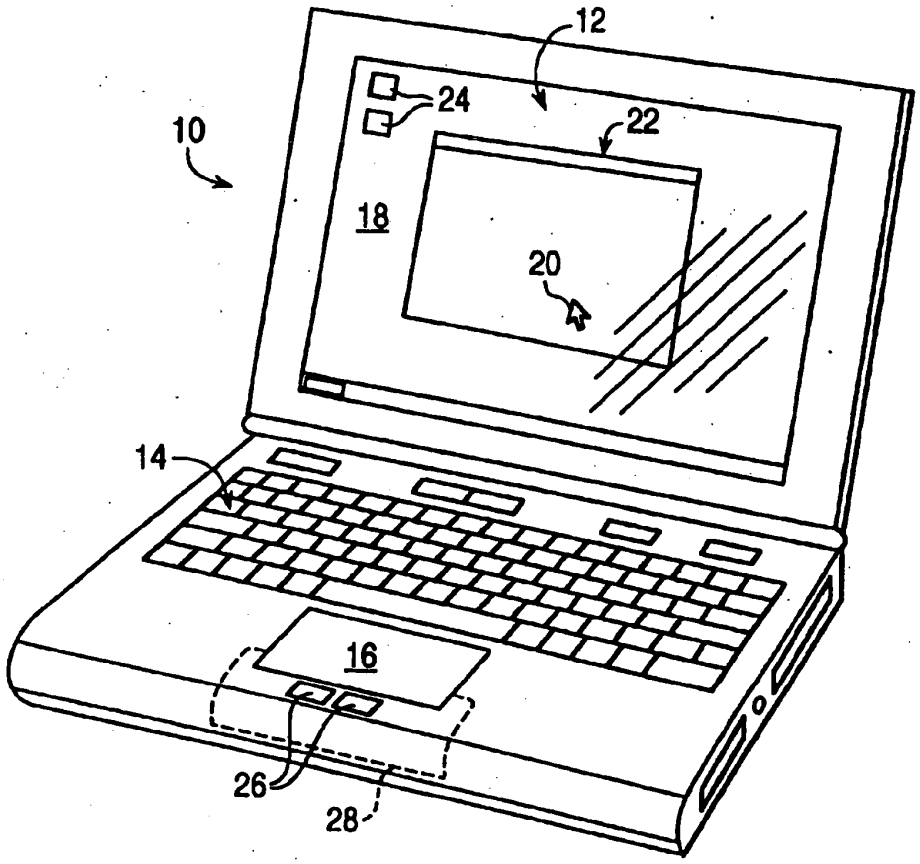

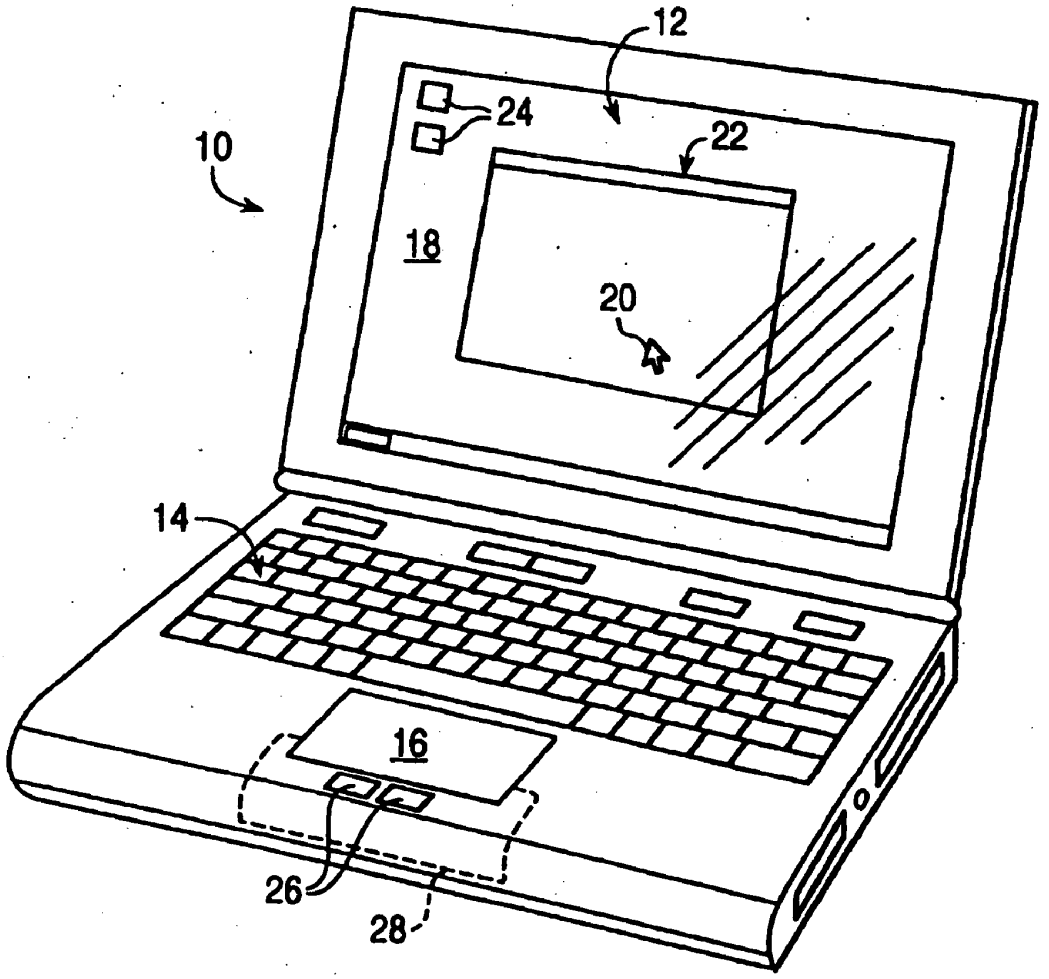

FIG. 1

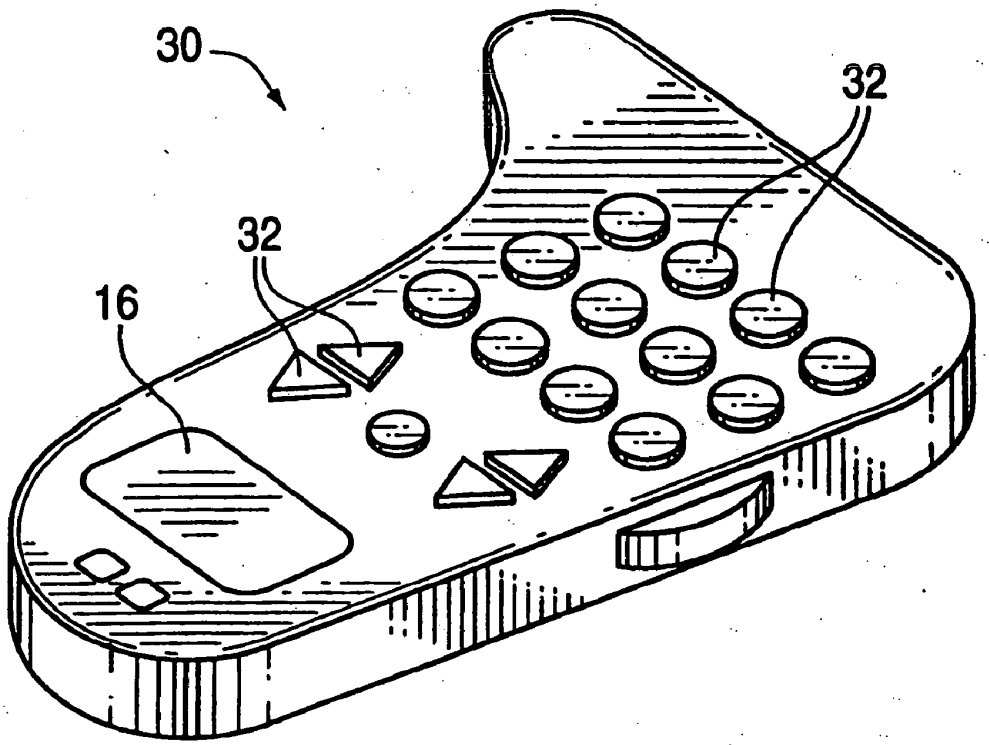

FIG. 2

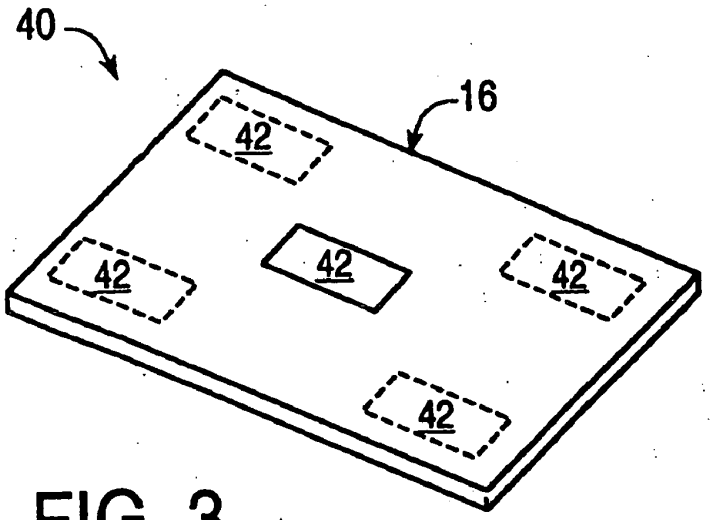

FIG. 3

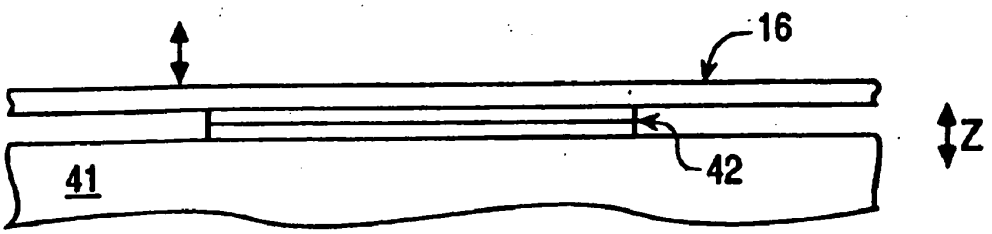

FIG. 4

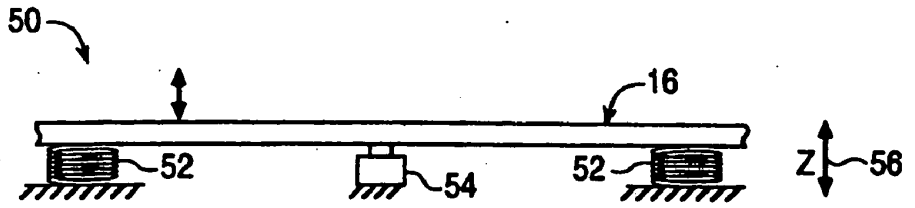

FIG. 5

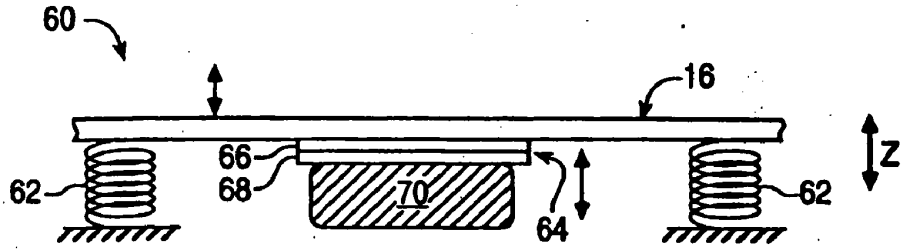

FIG. 6

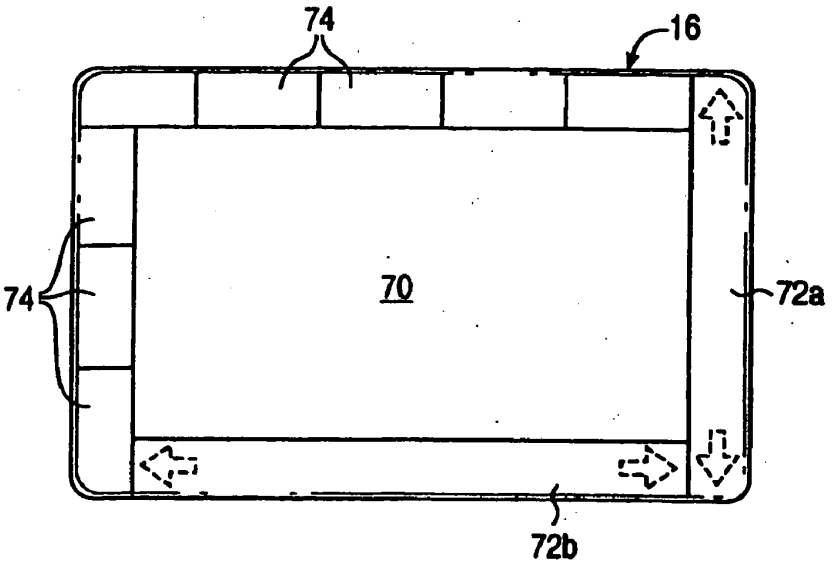

FIG. 7

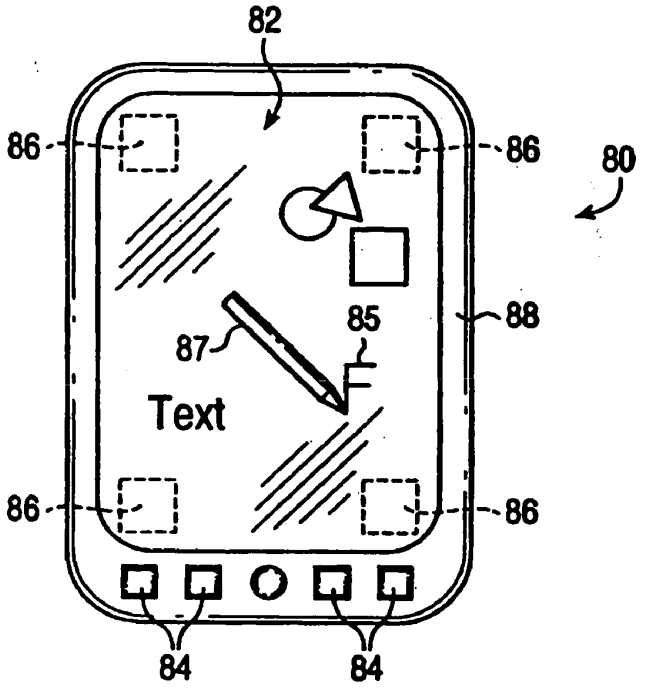

FIG. 8A

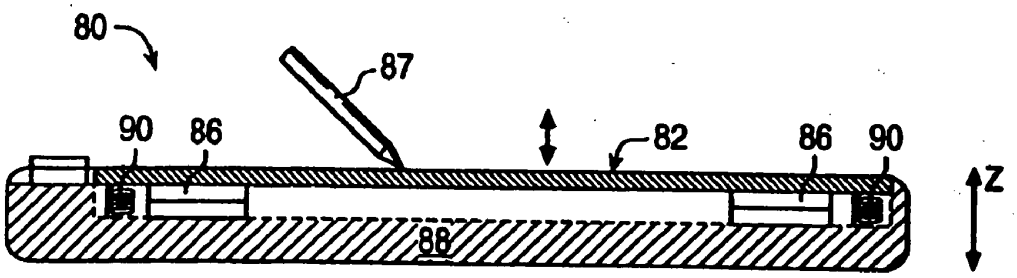

FIG. 8B

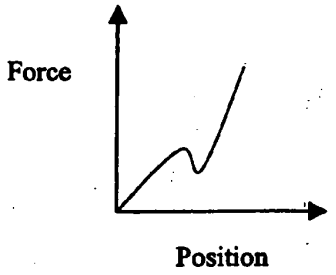
Force
Position

FIG. 9

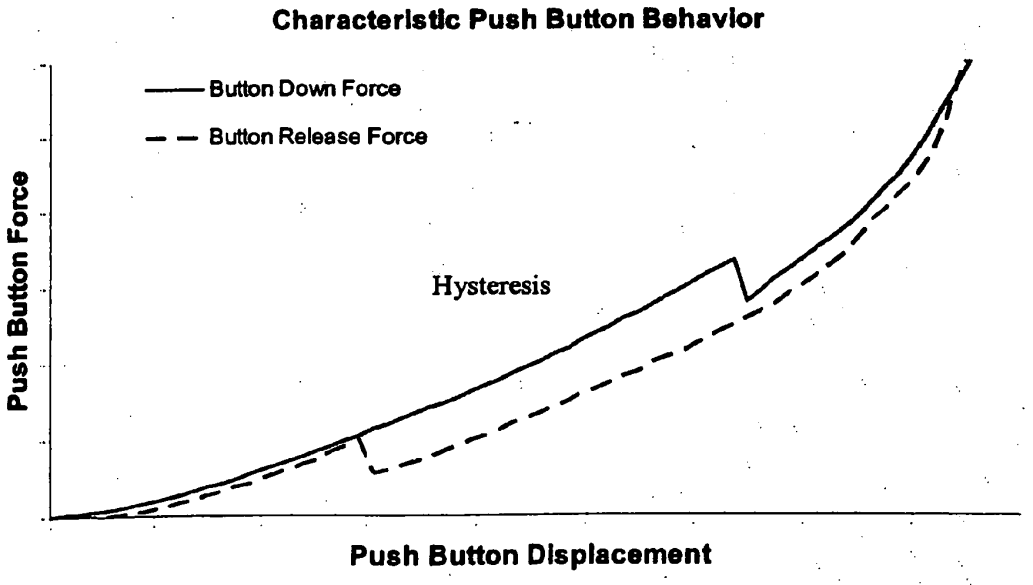
Characteristic Push Button Behavior
Button Down Force
Button Release Force
Hysteresis
Push Button Force
Push Button Displacement

FIG. 10

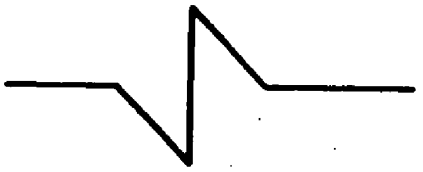

FIG. 11

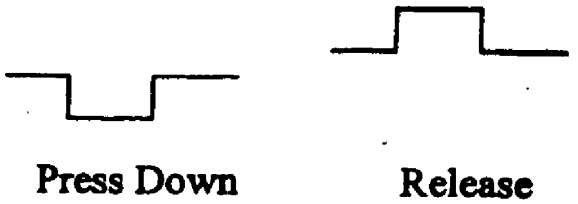

FIG. 12

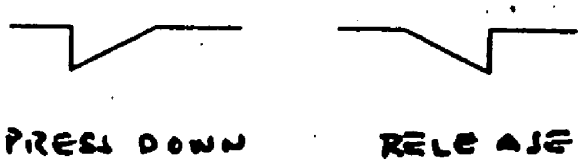

FIG. 13

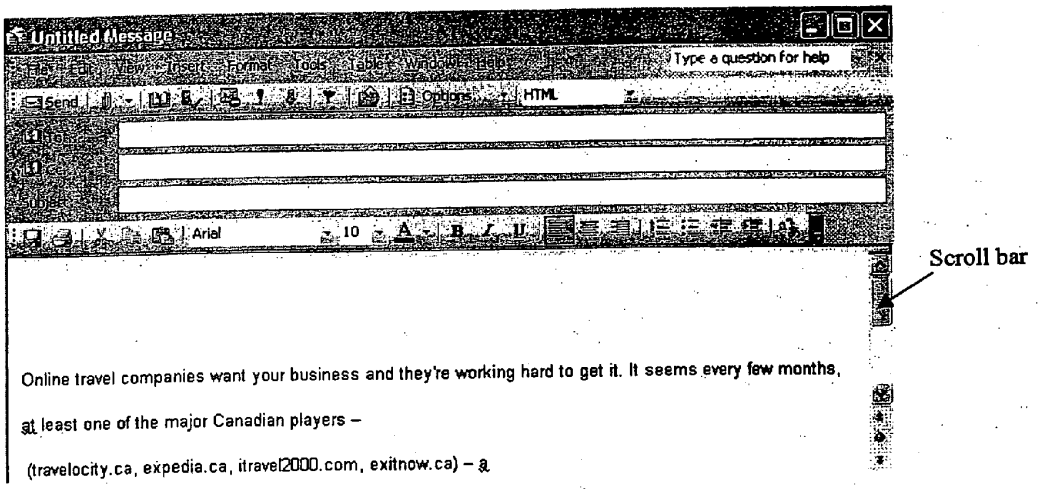
Untitled Message
File Edit View Insert Format Tools Table Window Help
Type a question for help
Send
Options
HTML
To
Cc
Subject
Arial
10
Scroll bar
Online travel companies want your business and they're working hard to get it. It seems every few months,
at least one of the major Canadian players –
(travelocity.ca, expedia.ca, itravel2000.com, exitnow.ca) – a

FIG. 14

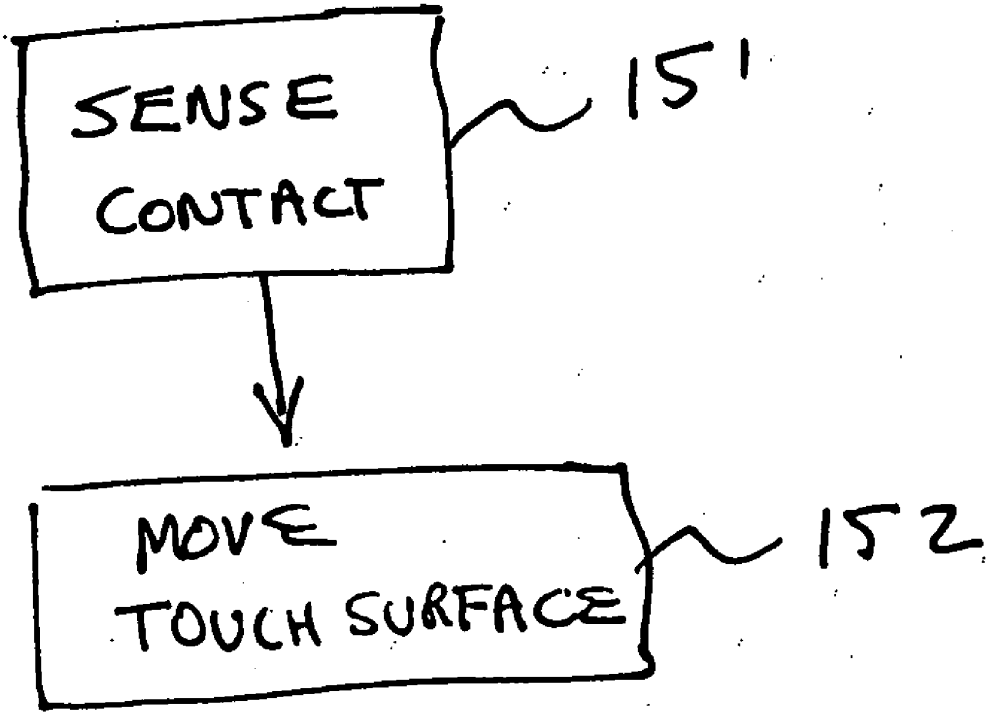

FIG. 15

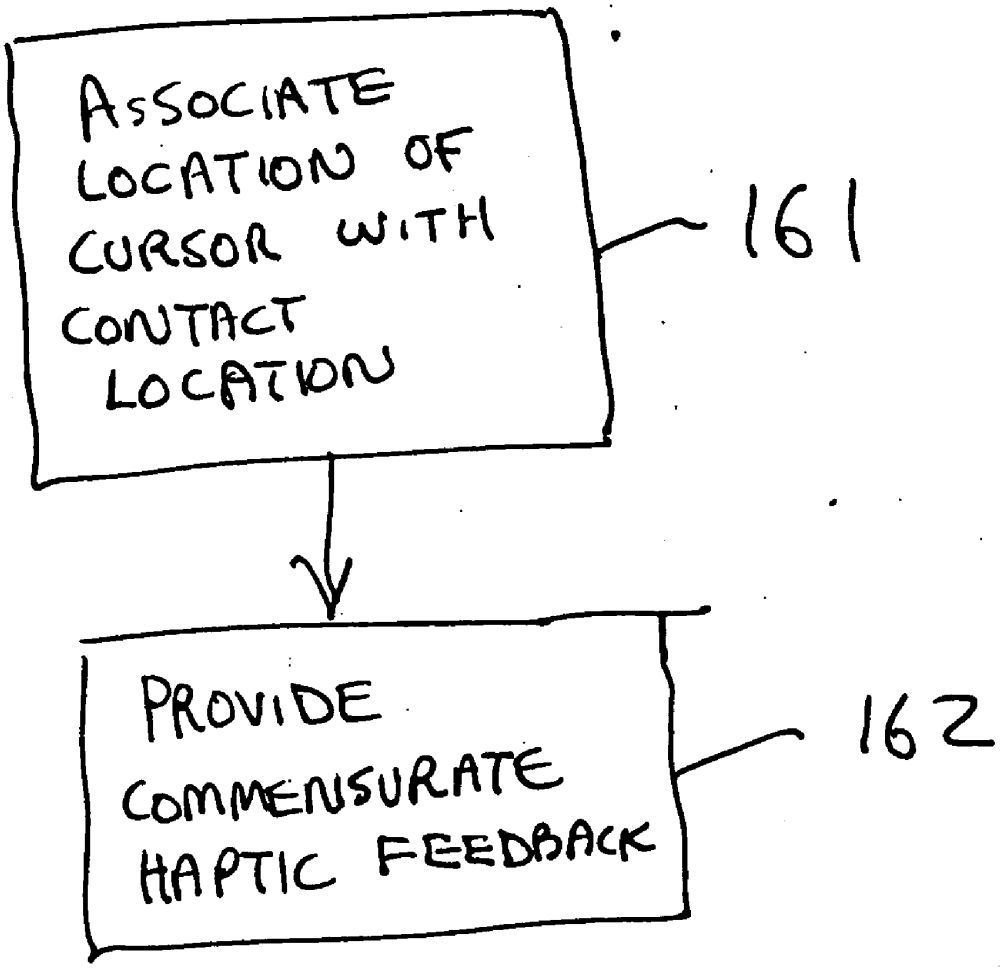
ASSOCIATE LOCATION OF CURSOR WITH CONTACT LOCATION
161
PROVIDE COMMENSURATE HAPTIC FEEDBACK
162

FIG. 16

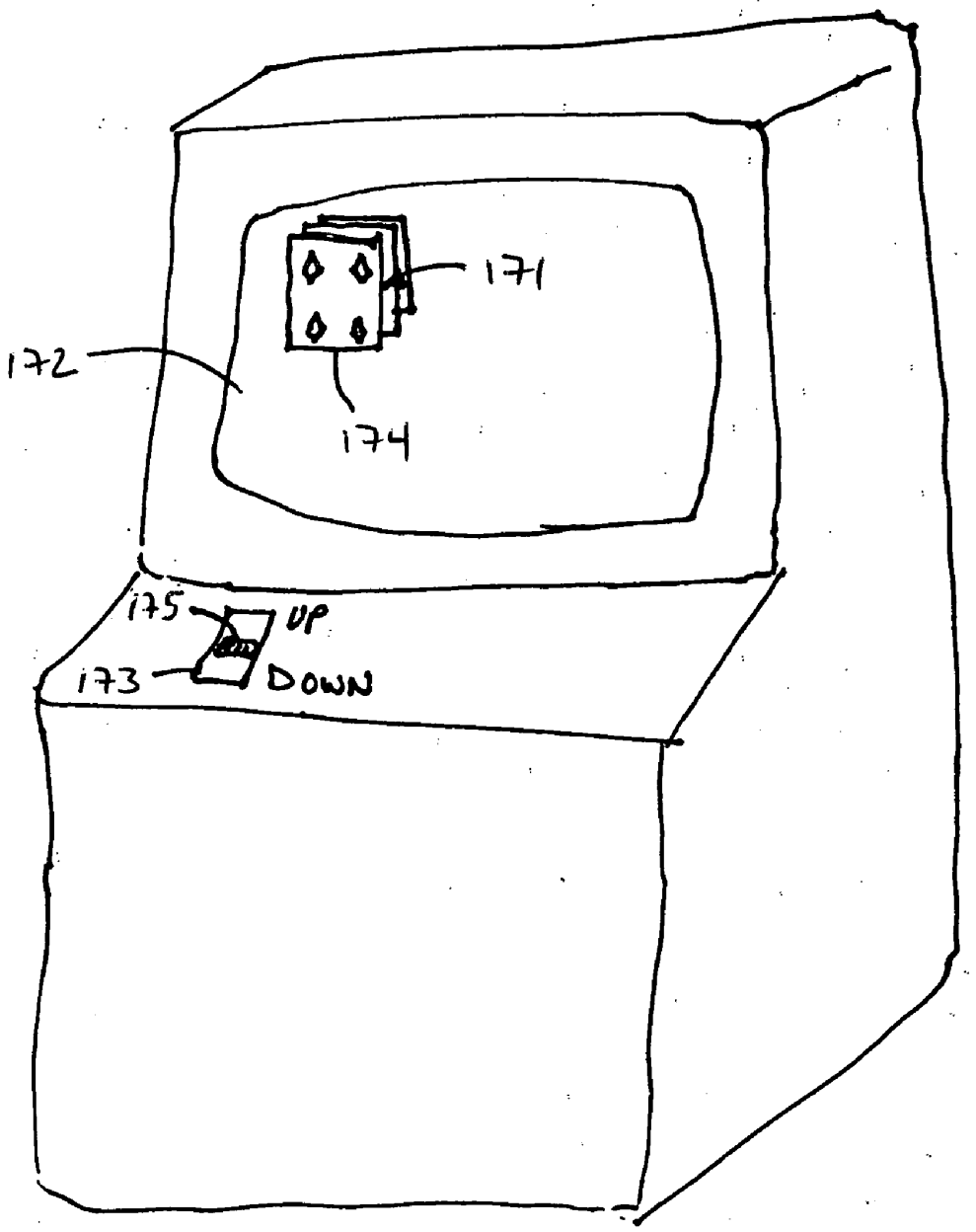

FIG. 17

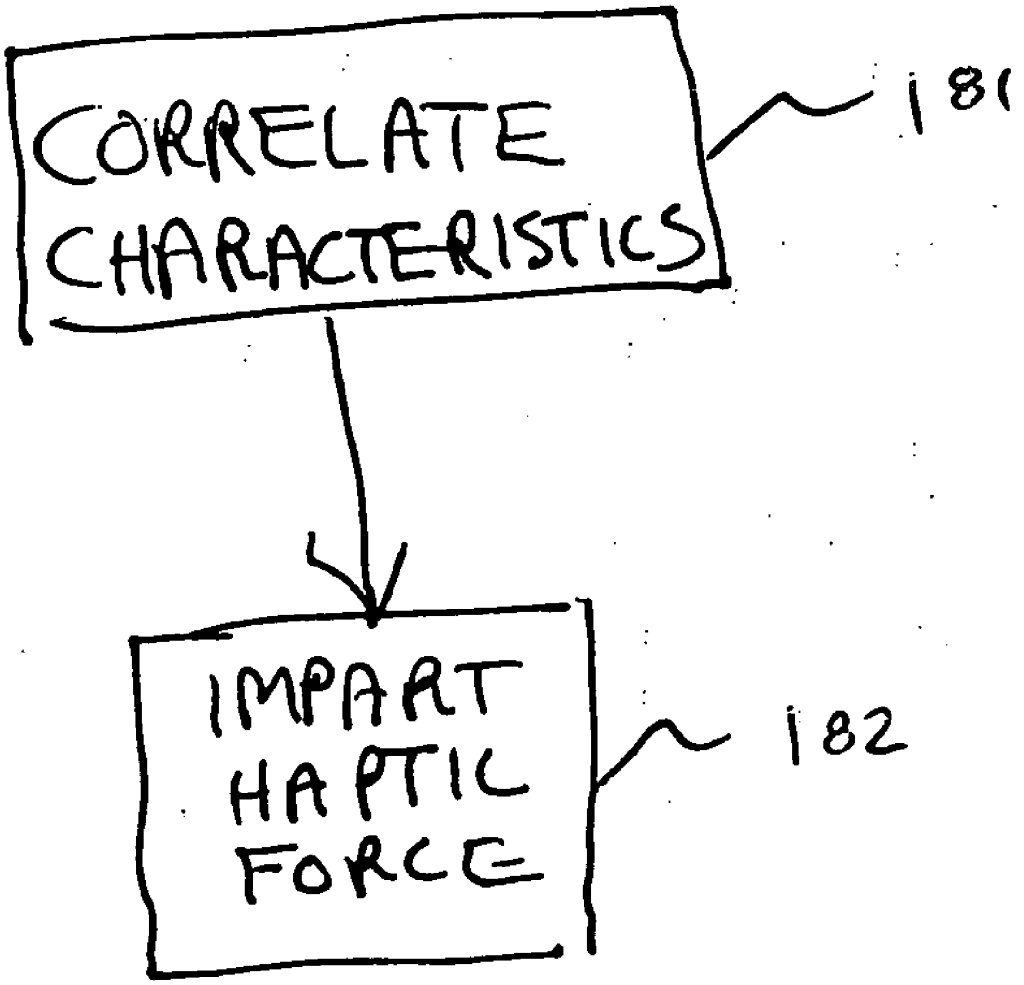

FIG. 18

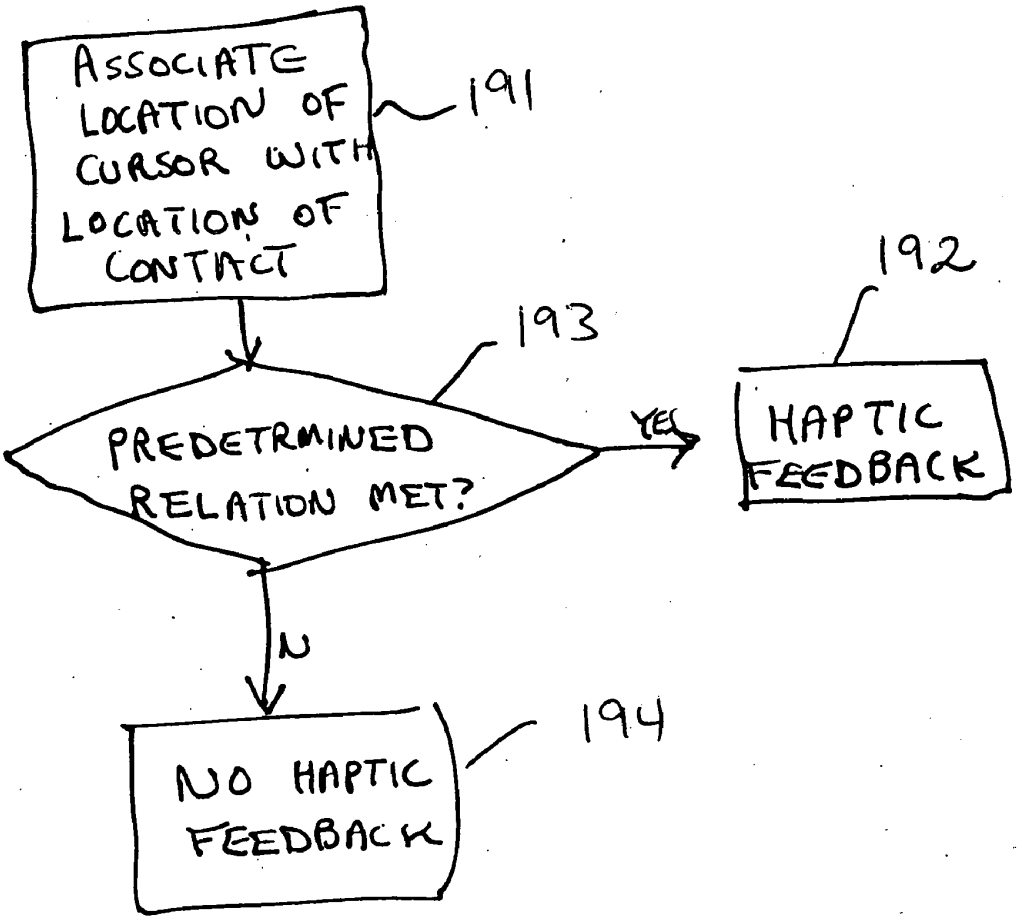
ASSOCIATE LOCATION OF CURSOR WITH LOCATION OF CONTACT
191
PREDETRMINED RELATION MET?
193
YES
HAPTIC FEEDBACK
192
N
NO HAPTIC FEEDBACK
194

FIG. 19

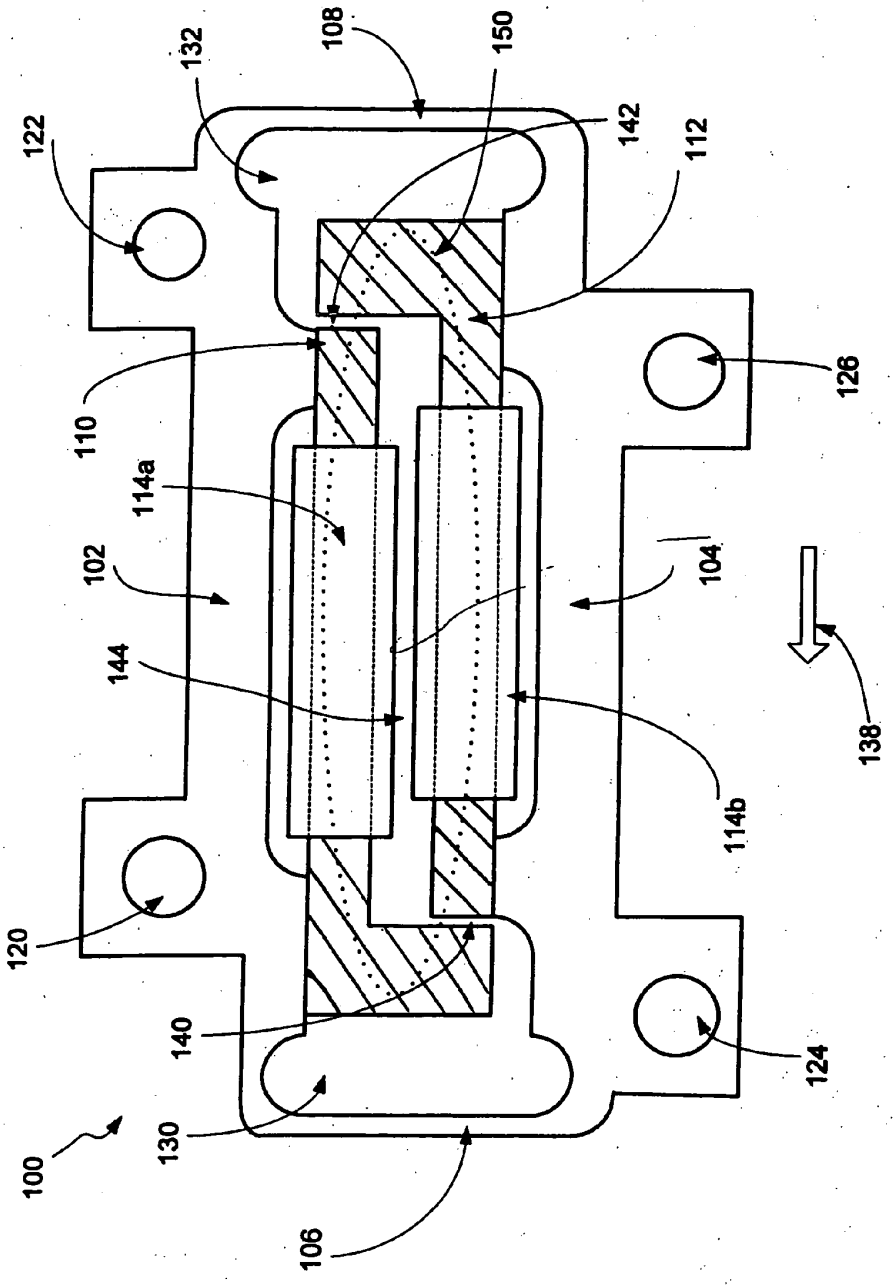
100
102
104
106
108
110
112
114a
114b
120
122
124
126
130
132
138
140
142
144
150

FIG. 20

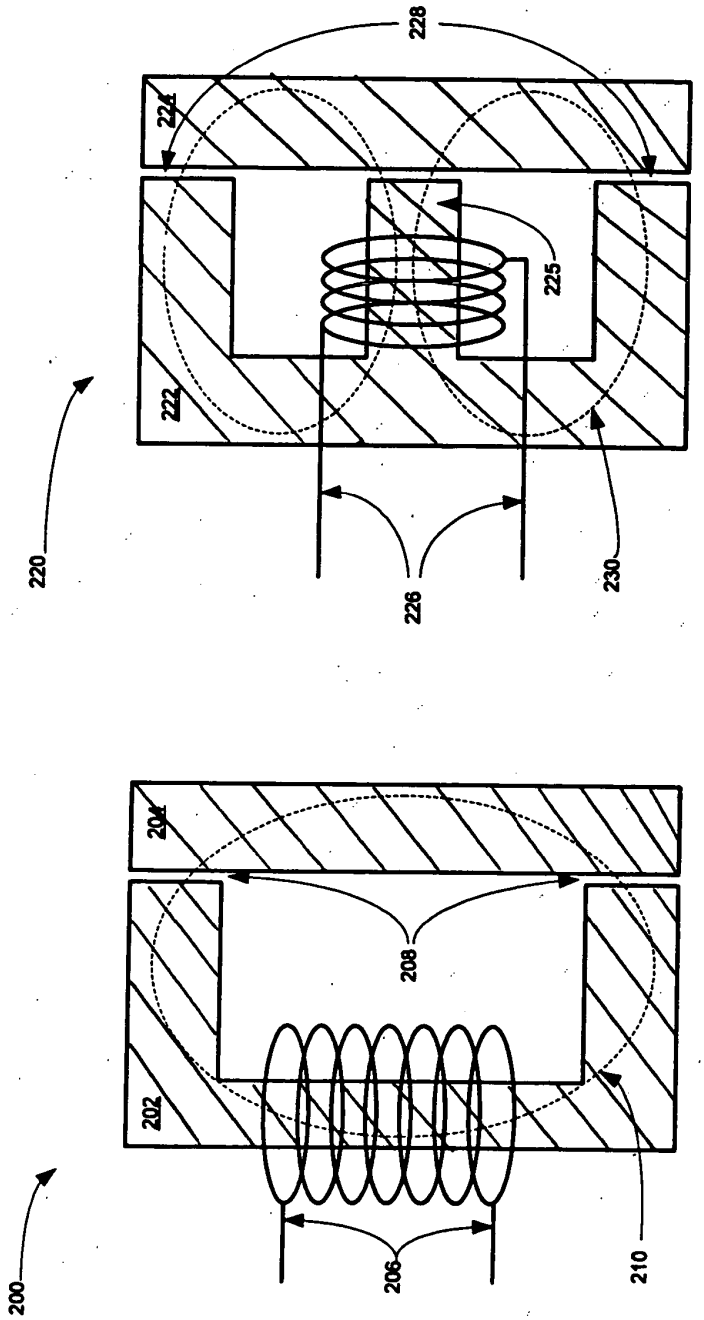

FIG. 21

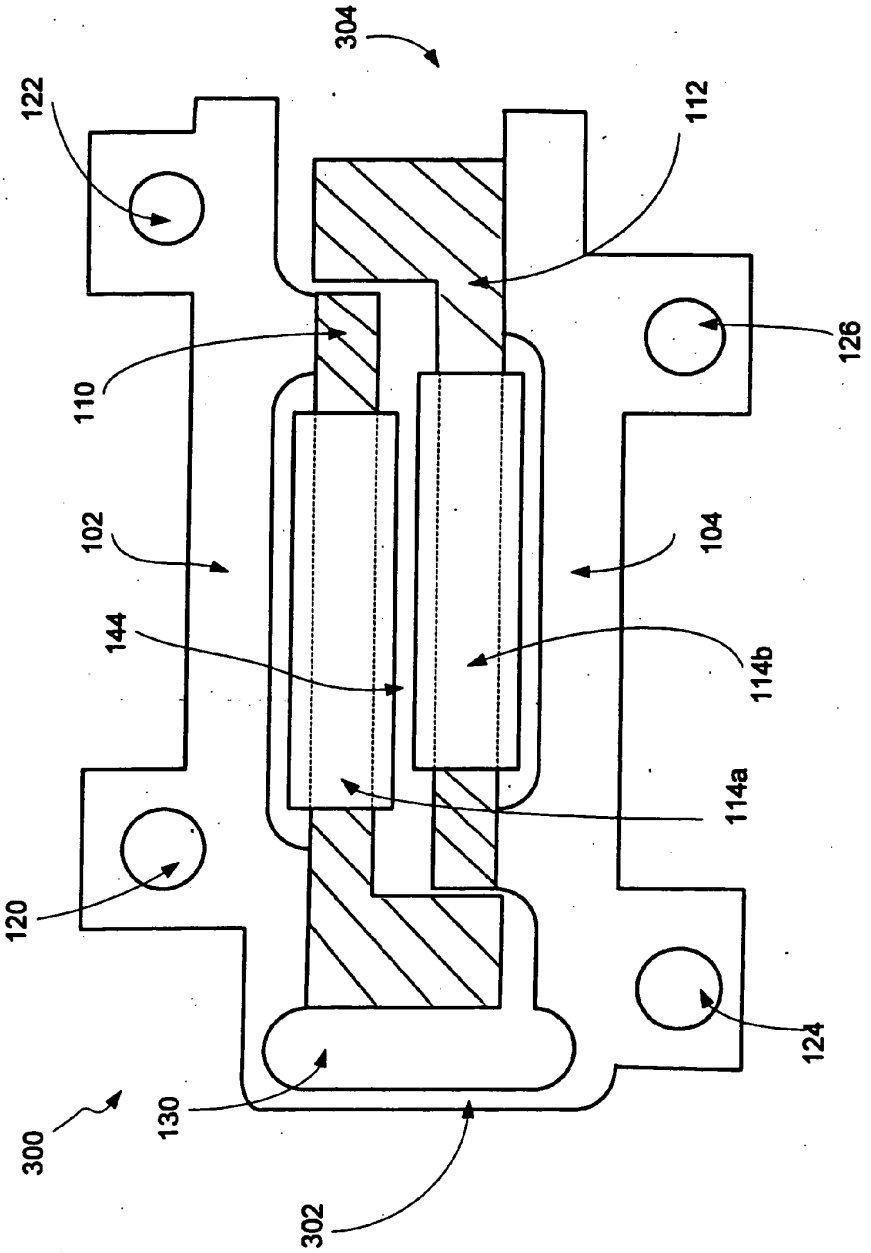

FIG. 22

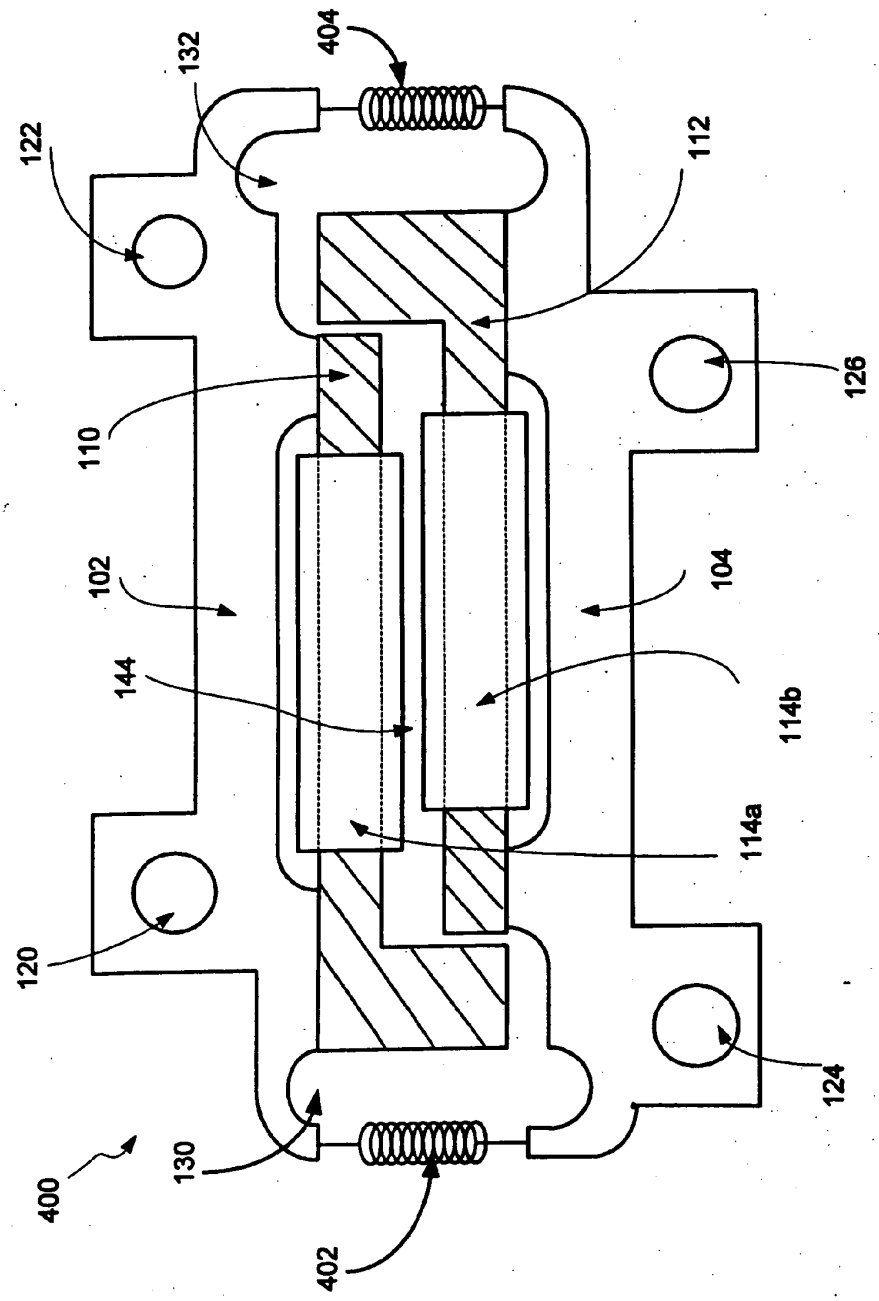
404
132
122
112
126
110
102
104
144
114b
114a
120
124
130
400
402

FIG. 23

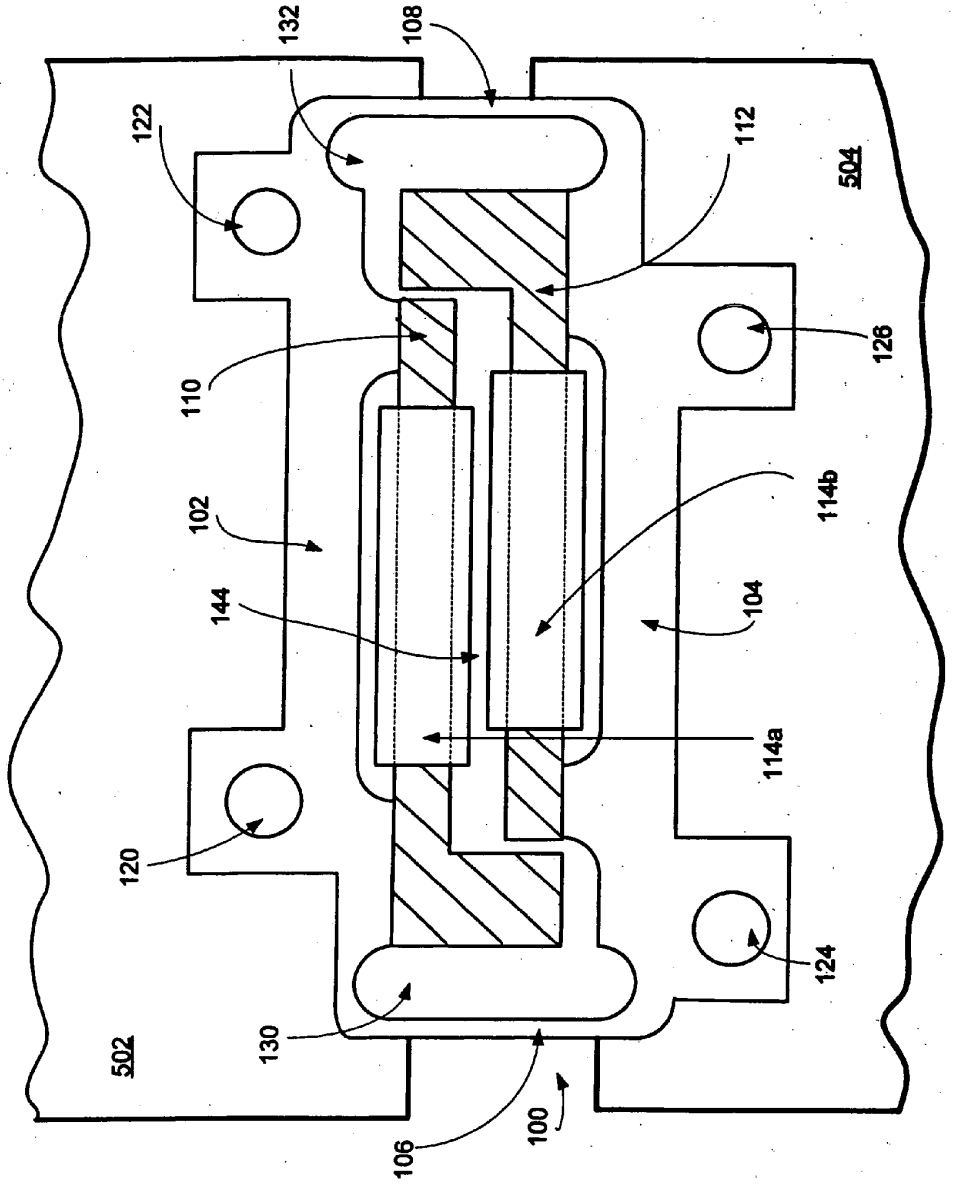
132
108
122
112
504
110
126
102
114b
144
104
114a
120
124
502
130
106
100

FIG. 24

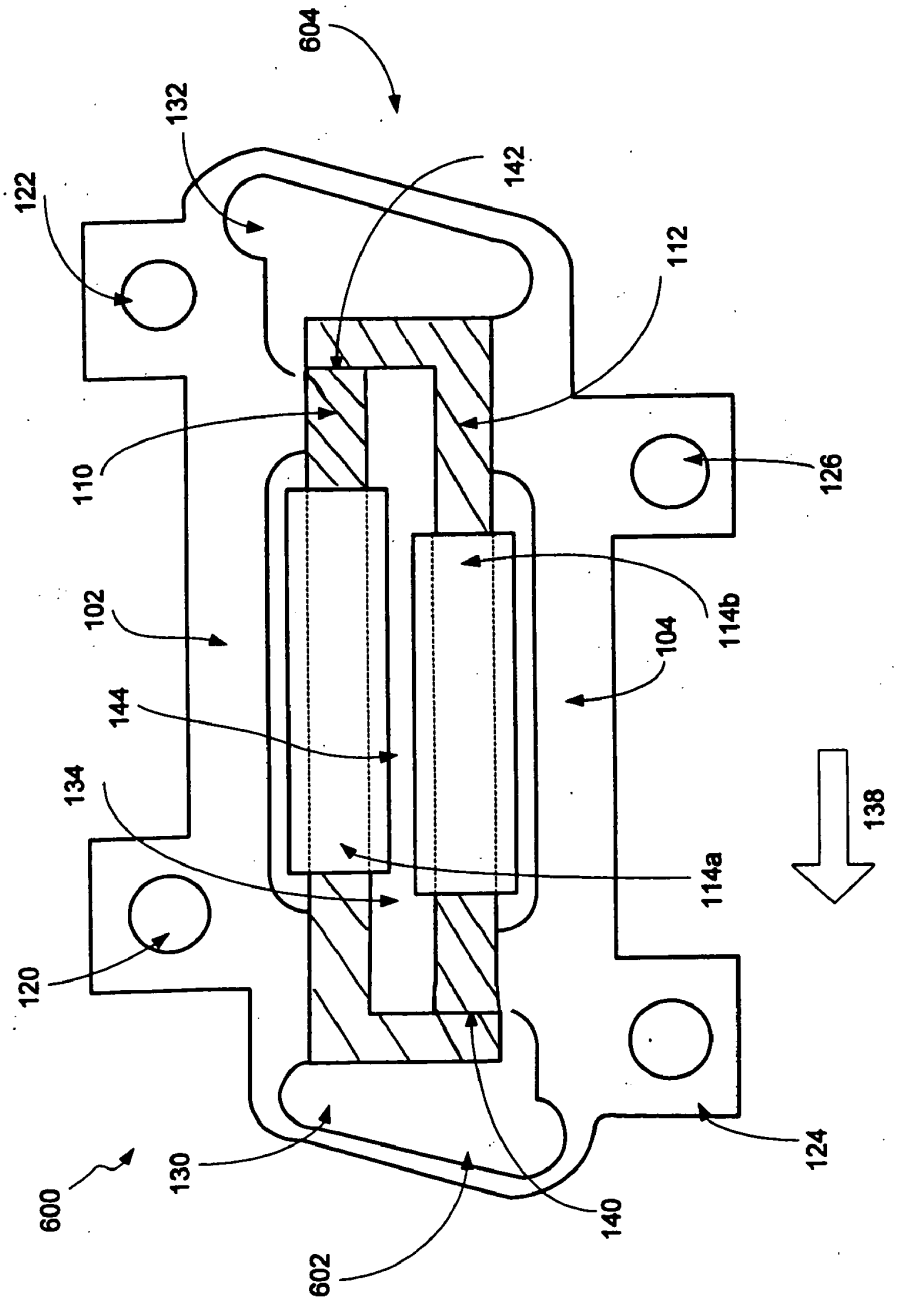
604
132
122
142
112
110
126
102
114b
104
144
134
138
114a
120
600
130
124
140
602

FIG. 25

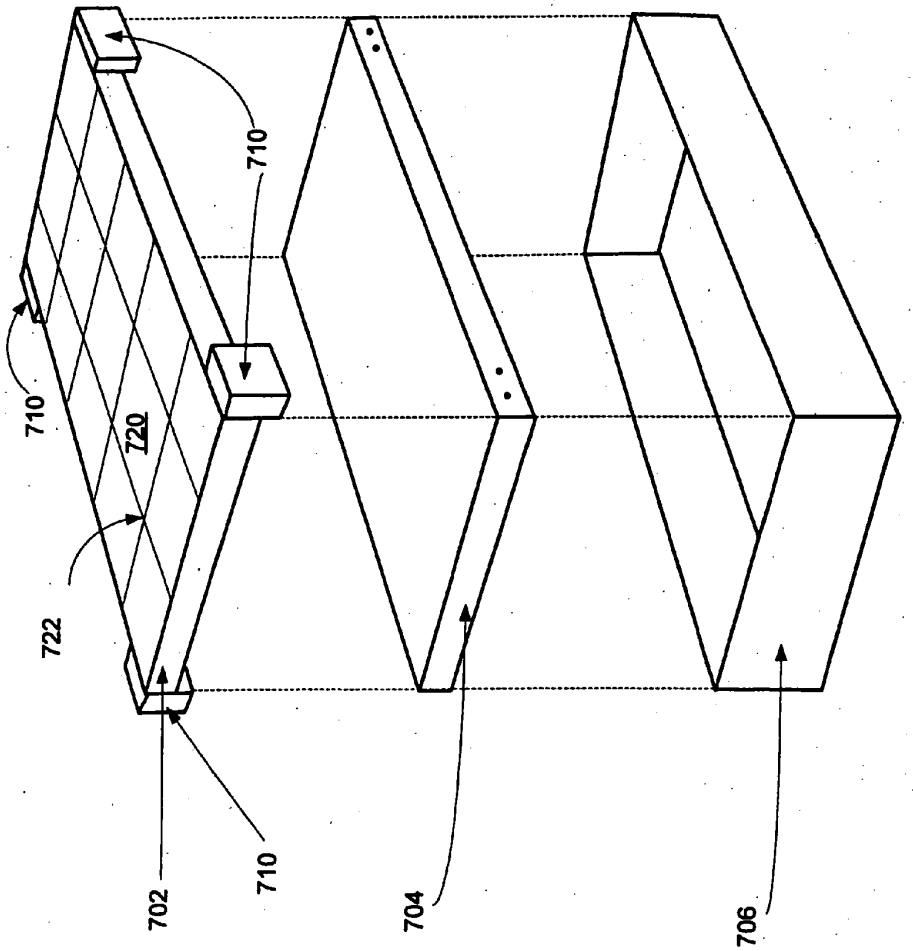

FIG. 26

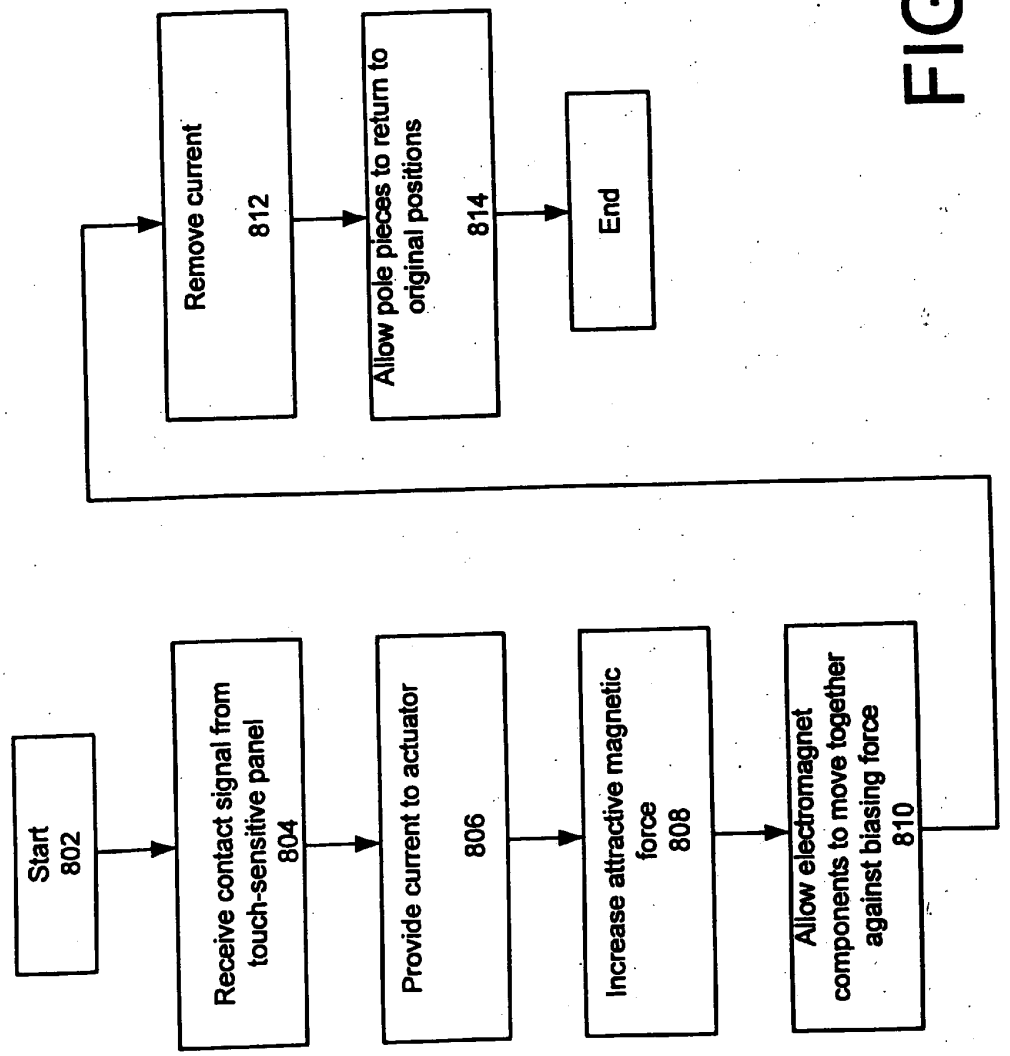
Start
802
Receive contact signal from touch-sensitive panel
804
Provide current to actuator
806
Increase attractive magnetic force
808
Allow electromagnet components to move together against biasing force
810
Remove current
812
Allow pole pieces to return to original positions
814
End

FIG. 27

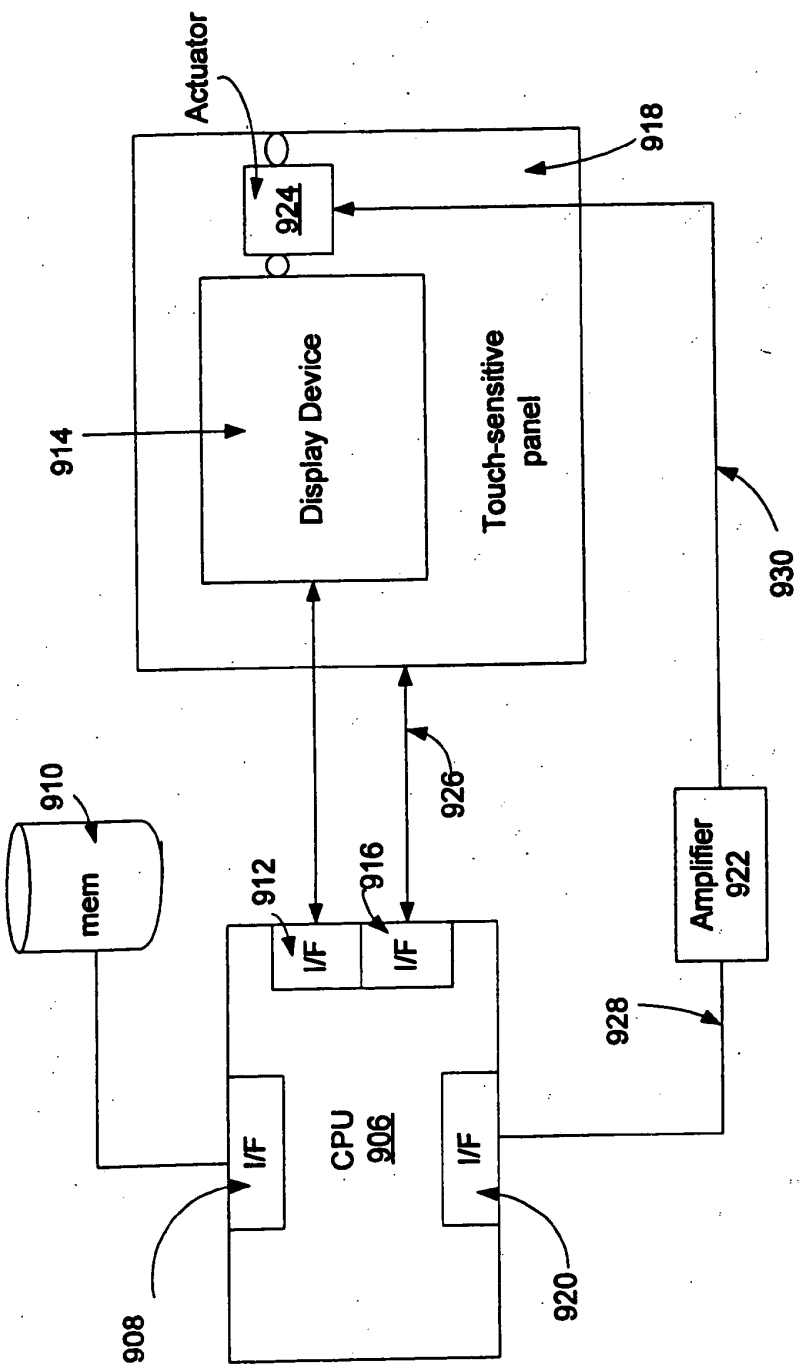
Actuator
924
918
914
Display Device
Touch-sensitive panel
930
910
mem
912
916
I/F
I/F
926
Amplifier 922
928
I/F
CPU 906
I/F
908
920

FIG. 28

FIG. 29

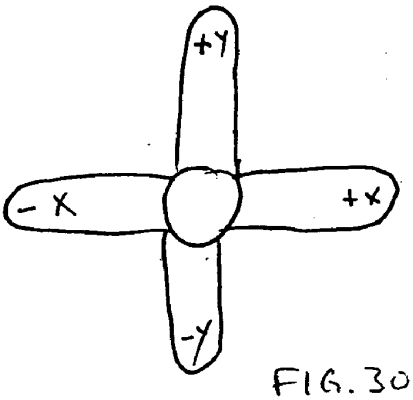

FIG. 30

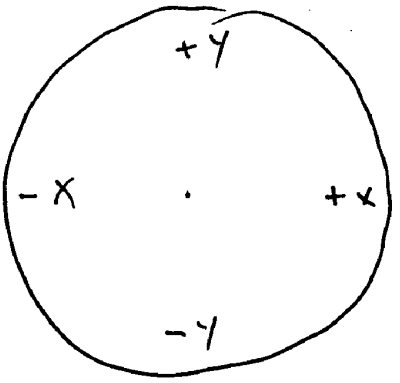

FIG. 31

HAPTIC FEEDBACK FOR BUTTON AND SCROLLING ACTION SIMULATION IN TOUCH INPUT DEVICES

CROSS REFERENCE TO RELATED APPLICATIONS

[0001] This application claims the benefit of U.S. Provisional Patent Application Ser. No. 60/616,648 filed Oct. 8, 2004 in the name of the same inventors and commonly assigned herewith.

[0002] This application may be considered to be related to the following prior patents and patent applications: U.S. patent application Ser. No. 10/615,986, filed Jul. 10, 2003, which is, in turn, a continuation of U.S. patent application Ser. No. 10/213,940, filed Aug. 6, 2002, which is, in turn, a continuation of U.S. patent application Ser. No. 09/487,737, filed Jan. 19, 2000, now U.S. Pat. No. 6,429,846, which is, in turn, a continuation-in-part of U.S. patent application Ser. No. 09/467,309, filed Dec. 17, 1999, now U.S. Pat. No. 6,563,487, which is, in turn, a continuation-in-part of U.S. patent application Ser. No. 09/156,802, filed Sep. 17, 1998, now U.S. Pat. No. 6,184,868, which is, in turn, a continuation-in-part of U.S. patent application Ser. No. 09/103,281, filed Jun. 23, 1998, now U.S. Pat. No. 6,088,019, which is, in turn, a continuation-in-part of U.S. patent application Ser. No. 09/253,132, filed Feb. 18, 1999, now U.S. Pat. No. 6,243,078, all commonly assigned herewith. This application may also be considered to be related to U.S. patent application Ser. No. 09/917,263, filed Jul. 26, 2001, now U.S. Pat. No. 6,822,635 (based on U.S. Provisional Patent Application Ser. No. 60/274,444, filed Mar. 9, 2001); U.S. patent application Ser. No. 10/213,354, filed Aug. 5, 2002, now abandoned; U.S. patent application Ser. No. 10/919,648, filed Aug. 17, 2004, now pending; U.S. patent application Ser. No. 10/919,798, filed Aug. 17, 2004, now pending; PCT/US01/01486, filed Jan. 17, 2001; and PCT/US02/17102, filed Mar. 8, 2002. All of the foregoing U.S. patents and applications are hereby incorporated herein by reference as if set forth fully herein.

BACKGROUND OF THE INVENTION

[0003] The present invention relates generally to the interfacing with computer and mechanical devices by a user, and more particularly to devices used to interface with computer systems and electronic devices and which provide haptic feedback to the user.

[0004] Humans interface with electronic and mechanical devices in a variety of applications, and the need for a more natural, easy-to-use, and informative interface is a constant concern. In the context of the present invention, humans interface with computer devices for a variety of applications. One such application is interacting with computer-generated environments such as are found in, for example, games, simulations, and application programs.

[0005] In some interface devices, force feedback or tactile feedback is also provided to the user, collectively known herein as "haptic feedback." For example, haptic versions of joysticks, mice, game pads, steering wheels, or other types of devices can output forces to the user based on events or interactions occurring within the computer-generated environment, such as a graphical environment found in a game, simulation or other application program.

[0006] In portable computer or electronic devices, such as laptop computers, moveable mouse-type position encoding input device often require too large a workspace to be practical. As a result, more compact devices such as trackballs are often used. A more popular device for portable computers are "touchpads," which are usually embodied as small rectangular, planar pads provided near the keyboard of the computer. Touchscreens are also used and becoming more popular. Touchpads do not incorporate an integral display device—touchscreens do. Such touch input devices sense the location of a pointing object (such as a user's finger or an input stylus) by any of a variety of sensing technologies, such as capacitive sensors, infrared light beams, pressure sensors that detect pressure applied to the touch input device, and the like. In a common application the user contacts the touch input device with a fingertip and moves his or her finger on the surface of the control to move a cursor displayed in the graphical environment or to select a displayed element. In other applications, a stylus may be used instead of a finger.

[0007] One problem with existing touch input devices is that there is no haptic feedback provided to the user. The user of a touchpad is therefore not able to experience haptic sensations that assist and inform the user of targeting and other control tasks within the graphical environment. The touch input devices of the prior art also cannot take advantage of existing haptic-enabled software run on the portable computer.

SUMMARY OF THE INVENTION

[0008] The present invention is directed to a haptic feedback planar touch input device used to provide input to a computer system. The touch input device can be a touchpad provided on a portable computer, or it can be a touch screen found on a variety of devices, or it may be implemented with similar input devices. The haptic sensations output on the touch input device enhance interactions and manipulations in a displayed graphical environment or when using the touch input device to control an electronic device.

[0009] More specifically, the present invention relates to a haptic feedback touch input device for inputting signals to a computer and for outputting forces to a user of the touch input device. The touch input device includes an approximately planar (planar or near-planar) touch surface operative to input a position signal to a processor of said computer based on a location of user contact on the touch surface. The position signal may be used in a number of ways, for example, it may be used to position a cursor in a graphical environment displayed on a display device based at least in part on the position signal. It may be used to rotate, reposition, enlarge and/or shrink an image of an object displayed on a display device based at least in part on the position signal. It may be used to provide other desired inputs to a computing device. These inputs may include scroll-inputs causing text or displayed images to move up, down, right or left, to rotate, or to be made larger or smaller in the graphical environment. At least one actuator is also coupled to the touch input device and outputs a force on the touch input device to provide a haptic sensation to the user contacting the touch surface. The actuator outputs the force based on force information output by the processor to the actuator. Most touch input devices also will include an ability to measure the relative pressure applied to the touch

input device while touching it and that relative pressure may also be used for control and may be used at least in part to create haptic output to the user.

[0010] The touch input device can be a touchpad separate from a display screen of the computer, or can be included in a display screen of the computer as a touch screen. The touch input device can be integrated in a housing of the computer or handheld device, or provided in a housing that is separate from the computer. The user contacts the touch surface with a finger, a stylus, or other object. The actuator can include a piezo-electric actuator, a voice coil actuator, a pager motor, a solenoid, or other type of actuator. In one embodiment, the actuator is coupled between the touch input device and a grounded surface. In another embodiment, the actuator is coupled to an inertial mass. The actuator may be coupled to cause relative movement between a display screen and a transparent touch input panel disposed over the display screen in a touch screen device. A touch device microprocessor which may be separate from the main processor of the computer can receive force information from the host computer and provide control signals based on the force information to control the actuator.

[0011] The haptic sensations, such as a pulse, vibration, or spatial texture, may be output in accordance with an interaction between a user controlled location and a graphical object in the graphical environment. The touch input device can include multiple different regions, where at least one of the regions provides the position signal and at least one other region provides a signal that is used by the computer to control a different function, such as rate control function of a value or a button press. Different regions and borders between regions can be associated with different haptic sensations. Alternatively, rate control may be established through a magnitude of the touch force applied by the user. For example, more force could be used to increase the rate input and less force could be used to decrease it.

[0012] The present invention advantageously provides haptic feedback to a planar touch control device of a computer, such as a touchpad or touch screen. The haptic feedback can assist and inform the user of interactions and events within a graphical user interface or other environment and ease cursor targeting tasks. Furthermore, the invention allows portable computer devices having such touch controls to take advantage of existing haptic feedback enabled software. The haptic touch devices disclosed herein may also be produced so that they are inexpensive, compact and consume low power, allowing them to be easily incorporated into a wide variety of portable and desktop computers and electronic devices.

[0013] These and other advantages of the present invention will become apparent to those skilled in the art upon a reading of the following specification of the invention and a study of the several figures of the drawing.

BRIEF DESCRIPTION OF THE DRAWINGS

[0014] The accompanying drawings, which are incorporated into and constitute a part of this specification, illustrate one or more embodiments of the present invention and, together with the detailed description, serve to explain the principles and implementations of the invention.

[0015] In the drawings:

[0016] **FIG. 1** is a perspective view of a haptic touchpad of the present invention;

[0017] **FIG. 2** is a perspective view of a remote control device including the touchpad of the present invention;

[0018] **FIG. 3** is a perspective view of a first embodiment of the touchpad of the present invention including one or more actuators coupled to the underside of the touchpad;

[0019] **FIG. 4** is a side elevational view of a first embodiment of the present invention in which a piezo-electric actuator is directly coupled to the touchpad of the present invention;

[0020] **FIG. 5** is a side elevational view of a second embodiment of the touchpad of the present invention including a linear actuator;

[0021] **FIG. 6** is a side elevational view of a third embodiment of the touchpad of the present invention having an inertial mass;

[0022] **FIG. 7** is a top plan view of an example of a touchpad of the present invention having different control regions;

[0023] **FIGS. 8A and 8B** are top plan and side cross sectional views, respectively, of a touch screen embodiment of the present invention;

[0024] **FIG. 9** is a plot of force versus position illustrating a force profile typical of a conventional snap-type button;

[0025] **FIG. 10** is a plot of push button force versus push button displacement illustrating hysteresis in a typical push button;

[0026] **FIG. 11** is a plot illustrating a combined sawtooth waveform;

[0027] **FIG. 12** is a plot illustrating a single pulse waveform in one direction on press down (left plot) followed by a single pulse in the opposite direction on press up (right plot);

[0028] **FIG. 13** is a plot of a sawtooth type of single discontinuity waveform;

[0029] **FIG. 14** is a diagram of a screen image showing a scroll bar;

[0030] **FIG. 15** is a flow diagram showing a method for simulating a button press using haptic feedback imparted through a touch surface;

[0031] **FIG. 16** is a flow diagram showing a method for providing haptic feedback representative of the extent to which an action triggered by manipulation of a cursor relative to a graphical object displayed on a display screen is occurring;

[0032] **FIG. 17**. is a perspective view of video poker game using a slider switch having haptic feedback;

[0033] **FIG. 18** is a flow diagram showing a method for providing haptic feedback in response to a manipulation of a graphical object;

[0034] **FIG. 19** is a flow diagram showing a method for providing haptic feedback representative of the relative location of a cursor and a graphical object displayed on a display screen;

[0035] **FIG. 20** is an elevational diagram illustrating an actuator for providing haptic effects in accordance with one embodiment of the present invention;

[0036] **FIG. 21** is an elevational diagram illustrating alternative electromagnetic components for generating attractive magnetic force in an actuator in accordance with one embodiment of the present invention;

[0037] **FIG. 22** is an elevational diagram of an alternative embodiment of an actuator in accordance with the present invention;

[0038] **FIG. 23** is an elevational diagram of another embodiment of an actuator in accordance with the present invention;

[0039] **FIG. 24** is an elevational diagram of a system employing an actuator in accordance with one embodiment of the present invention;

[0040] **FIG. 25** is an elevational diagram illustrating a second equilibrium position of an actuator in accordance with one embodiment of the present invention;

[0041] **FIG. 26** is a front perspective diagram of a system configured with a plurality of actuators in accordance with one embodiment of the present invention;

[0042] **FIG. 27** is a flow diagram illustrating a method for generating haptic effects in accordance with one embodiment of the present invention;

[0043] **FIG. 28** is a block diagram illustrating a system having an actuator in accordance with one embodiment of the present invention; and

[0044] **FIGS. 29, 30** and **31** are diagrams illustrating areas of a touch input device which may be used for particular inputs.

DETAILED DESCRIPTION OF PREFERRED EMBODIMENTS

[0045] Embodiments of the present invention are described herein in the context of a system of touch input devices with haptic feedback. Sometimes these are referred to herein as touch control devices. Those of ordinary skill in the art will realize that the following detailed description of the present invention is illustrative only and is not intended to be in any way limiting. Other embodiments of the present invention will readily suggest themselves to such skilled persons having the benefit of this disclosure. Reference will now be made in detail to implementations of the present invention as illustrated in the accompanying drawings. The same reference indicators will be used throughout the drawings and the following detailed description to refer to the same or like parts.

[0046] In the interest of clarity, not all of the routine features of the implementations described herein are shown and described. It will, of course, be appreciated that in the development of any such actual implementation, numerous implementation-specific decisions must be made in order to achieve the developer's specific goals, such as compliance with application- and business-related constraints, and that these specific goals will vary from one implementation to another and from one developer to another. Moreover, it will be appreciated that such a development effort might be complex and time-consuming, but would nevertheless be a routine undertaking of engineering for those of ordinary skill in the art having the benefit of this disclosure.

[0047] In accordance with the present invention, the components, process steps, and/or data structures may be implemented using various types of operating systems, computing platforms, computer programs, and/or general purpose machines. In addition, those of ordinary skill in the art will recognize that devices of a less general purpose nature, such as hardwired devices, field programmable gate arrays (FPGAs), application specific integrated circuits (ASICs), or the like, may also be used without departing from the scope and spirit of the inventive concepts disclosed herein.

[0048] **FIG. 1** is a perspective view of a portable computer **10** including a haptic touchpad of the present invention. Computer **10** is preferably a portable or "laptop" computer that can be carried or otherwise transported by the user and may be powered by batteries or other portable energy source in addition to other more stationary power sources. Computer **10** preferably runs one or more host application programs with which a user is interacting via peripherals. Some display devices **12** for computers are display-only devices—in other cases the display devices incorporate a touch-sensitive surface and may themselves be used for touch input. Such screens are frequently seen in kiosks, automatic teller machines, automated vending machines of various types, and the like.

[0049] Computer **10** may include the various input and output devices as shown, including a display device **12** for outputting graphical images to the user, a keyboard **14** for providing character or toggle input from the user to the computer, and a touchpad **16** of the present invention. Display device **12** can be any of a variety of types of display devices; flat-panel displays are most common on portable computers. Display device **12** can display a graphical environment **18** based on application programs and/or operating systems that are running, such as a graphical user interface (GUI), that can include a cursor **20** that can be moved by user input, as well as windows **22**, icons **24**, and other graphical objects well known in GUI environments. Other devices may also be incorporated or coupled to the computer **10**, such as storage devices (hard disk drive, DVD-ROM drive, and the like), network server or clients, game controllers, and the like. In alternate embodiments, the computer **10** can take a wide variety of forms, including computing devices that rest on a tabletop or other surface, stand-up arcade game machines, automatic teller machines (ATMs), automatic vending machines, other portable devices or devices worn on the person, handheld or used with a single hand of the user, and the like. For example, host computer **10** can be a video game console, personal computer, workstation, a television "set top box" or a "network computer", or other computing or electronic device.

[0050] Touchpad device **16** of the present invention preferably appears externally to be similar to the touchpads of the prior art. Pad **16** includes a planar, rectangular smooth surface that can be positioned below the keyboard **14** on the housing of the computer **10**, as shown, or may be positioned at other areas of the housing. When the user operates the computer **10**, the user may conveniently place a fingertip or other object on the touchpad **16** and move the fingertip to correspondingly move cursor **20** in the graphical environment **18**.

[0051] In operation, the touchpad **16** inputs coordinate data to the main microprocessor(s) of the computer **10** based

on the sensed location of an object on (or near) the touchpad. As with many touchpads of the prior art, touchpad **16** can be capacitive, resistive, or use any appropriate type of sensing. Some existing touchpad embodiments are disclosed, for example, in U.S. Pat. Nos. 5,521,336 and 5,943,044. Capacitive touchpads typically sense the location of an object on or near the surface of the touchpad based on capacitive coupling between capacitors in the touchpad and the object. Resistive touchpads are typically pressure-sensitive, detecting the pressure of a finger, stylus, or other object against the pad, where the pressure causes conductive layers, traces, switches, and the like in the pad to electrically connect. Some resistive or other types of touchpads can detect the amount of pressure applied by the user and can use the degree of pressure for proportional or variable input to the computer **10**. Resistive touchpads typically are at least partially deformable, so that when a pressure is applied to a particular location, the conductors at that location are brought into electrical contact. Such deformability can be useful in the present invention since it can potentially amplify the magnitude of output forces such as pulses or vibrations on the touchpad as used for haptic output in the present invention. Forces can be amplified if a tuned compliant suspension is provided between an actuator and the object that is moved, as described in U.S. Pat. No. 6,680,729, which is hereby incorporated herein by reference as if set forth fully herein. Capacitive touchpads and other types of touchpads that do not require significant contact pressure may be better suited for the present invention in many embodiments, since excessive pressure on the touchpad may in some cases interfere with the motion of the touchpad for haptic feedback. Other types of sensing technologies can also be used in the touchpad. Herein, the term "touchpad" preferably includes the surface of the touchpad **16** as well as any sensing apparatus (including software and/or firmware associated therewith) included in the touchpad unit.

[**0052**] Touchpad **16** preferably operates similarly to existing touchpads, where the speed of the fingertip on the touchpad correlates to the distance that a cursor (for example) is moved in the graphical environment. For example, if the user moves his or her finger quickly across the pad, the cursor is moved a greater distance than if the user moves the fingertip more slowly. If the user's finger reaches the edge of the touchpad before the cursor reaches a desired destination in that direction, then the user can simply move his or her finger off the touchpad, reposition the finger away from the edge, and continue moving the cursor. This is an "indexing" function similar to lifting a mouse off a surface to change the offset between mouse position and cursor. Furthermore, many touchpads can be provided with particular regions that are each assigned to particular functions that can be unrelated to cursor positioning. Such an embodiment is described in greater detail below with respect to **FIG. 7**. In some embodiments the touchpad **16** may also allow a user to "tap" the touchpad (rapidly touch and remove the object from the pad) in a particular location to provide a command. For example, the user can tap or "double tap" the pad with a finger while the controlled cursor is over an icon to select that icon.

[**0053**] In the present invention, the touch input device (touchpad **16** or touch screen) is provided with the ability to output haptic feedback such as tactile sensations to the user who is physically contacting the touch input device. Various embodiments detailing the structure of the haptic feedback touch input device are described in greater detail below. Preferably, the forces output on the touch input device are linear (or approximately linear (near-linear)) and oriented along the z-axis, perpendicular or approximately (near) perpendicular to the surface of the touch input device and a surface of computer **10**. In a different embodiment, forces can be applied to the touch input device to cause side-to-side (e.g., x-y) motion of the touch input device in the plane of its surface in addition to or instead of z-axis motion, although such motion is not presently preferred.

[**0054**] Using one or more actuators coupled to the touch input device, a variety of haptic sensations can be output to the user who is contacting the touch input device. For example, jolts, vibrations (varying or constant amplitude), and textures can be output. Forces output on the touch input device can be at least in part based on the location of the finger on the touch input device or the state of a controlled object in the graphical environment of the host computer **10**, and/or independent of finger position or object state. Such forces output on the touch input device are considered "computer-controlled" since a microprocessor or other electronic controller is controlling the magnitude and/or direction of the force output of the actuator(s) using electronic signals. Preferably, the entire touch input device is provided with haptic sensations as a single unitary member; in other embodiments, individually-moving portions of the pad can each be provided with its own haptic feedback actuator and related transmissions so that haptic sensations can be provided for only a particular portion. For example, some embodiments may include a touch input device having different portions that may be flexed or otherwise moved with respect to other portions of the touch input device.

[**0055**] In other embodiments, the touch input device can be provided in a separate housing that is electrically connected to a port of the computer **10** via wired or wireless means and which receives force information from and sends position information to the computer **10**. For example, a number of well-known bus standards such as Universal Serial Bus (USB), Firewire (IEEE 1394), or a standard serial bus (RS-232) can connect such a touch input device to the computer **10**. In such an embodiment, the computer **10** can be any desktop or stationary computer or device and need not be a portable device.

[**0056**] One or more buttons **26** can also be provided on the housing of the computer **10** to be used in conjunction with the touch input device. The user's hands have easy access to the buttons, each of which may be pressed by the user to provide a distinct input signal to the host computer **12**. In some cases, each button **26** corresponds to a similar button found on a more conventional mouse input device, so that a left button can be used to select a graphical object (click or double click), a right button can bring up a context menu, and the like. In other cases a larger plurality of context-sensitive physical buttons may be provided about the periphery of the display with the current indicated function associated with a particular button displayed on the display. In some embodiments, one or more of the buttons **26** can be provided with tactile feedback as described in U.S. Pat. Nos. 6,184,868 and 6,563,487. Other features of these disclosures may also be used with the present invention.

[**0057**] Furthermore, in some embodiments, one or more moveable portions **28** of the housing of the computer device

10 can be included which is contacted by the user when the user operates the touchpad **16** and which portions **28** can provide haptic feedback to the user. Structures having a moveable portion of a housing for haptic feedback are described in U.S. Pat. Nos. 6,184,868 and 6,088,019. Thus, both the housing can provide haptic feedback (e.g., through the use of an eccentric rotating mass on a motor coupled to the housing) and the touchpad **16** can provide separate haptic feedback, and the touch screen assembly can provide haptic feedback. This allows the host to control multiple different tactile sensations simultaneously to the user; for example, a vibration of a low frequency can be conveyed through the housing to the user and a higher frequency vibration can be conveyed to the user through the touchpad **16**. Each other button or other control provided with haptic feedback can also provide tactile feedback independently from the other controls, if desired.

[**0058**] The host application program(s) and/or operating system preferably displays graphical images of the environment on display device **12** (which may, in one embodiment, be a touch screen). The software and environment running on the host computer **12** may be of a wide variety. For example, the host application program can be a word processor, spreadsheet, video or computer game, drawing program, operating system, graphical user interface, simulation, Web page or browser that implements HTML or VRML instructions, scientific analysis program, virtual reality training program or application, JAVA applet or other application program that utilizes input from the touch input device and outputs force feedback commands to the touch input device. For example, many games and other application programs include force feedback functionality and may communicate with the touch input device using standard protocols and/or drivers such as I-Force®, FEELit®, or Touchsense™ available from Immersion Corporation of San Jose, Calif.

[**0059**] The touch input device can include circuitry necessary to report control signals to the microprocessor of the host computer **10** and to process command signals from the host's microprocessor. For example, appropriate sensors (and related circuitry) are used to report the position of the user's finger on the touchpad **16**. The touchpad device also includes circuitry that receives signals from the host and outputs tactile sensations in accordance with the host signals using one or more actuators. In some embodiments, a separate, local microprocessor can be provided for the touchpad **16** to both report touchpad sensor data to the host and/or to carry out force commands received from the host, such commands including, for example, the type of haptic sensation and parameters describing the commanded haptic sensation. Alternatively, the touchpad microprocessor can simply pass streamed data from the main processor to the actuators. The term "force information" can include both commands/parameters and streamed data. The touchpad microprocessor can implement haptic sensations independently after receiving a host command by controlling the touchpad actuators; or, the host processor can maintain a greater degree of control over the haptic sensations by controlling the actuators more directly. In other embodiments, logic circuitry such as state machines provided for the touchpad **16** can handle haptic sensations as directed by the host main processor. Architectures and control methods that can be used for reading sensor signals and providing haptic feedback for a device are described in greater detail, for example, in U.S. Pat. Nos. 5,734,373; 6,639,581 and 6,411,276, all of which are hereby incorporated herein by reference as if set forth fully herein. Similarly, touchscreens may be used in much the same manner as touchpads.

[**0060**] **FIG. 2** is a perspective view of another embodiment of a device which can include an active touchpad **16** in accordance with the present invention. The device can be a handheld remote control device **30**, which the user grasps in one hand and manipulates controls to access the functions of an electronic device or appliance remotely by a user (such as a television, video cassette recorder or DVD player, audio/video receiver, Internet or network computer connected to a television, and the like). For example, several buttons **32** can be included on the remote control device **30** to manipulate functions of the controlled apparatus. A touchpad **16** can also be provided to allow the user to provide more sophisticated directional input. For example, a controlled apparatus may have a selection screen in which a cursor or other object displayed thereon may be moved, and the touchpad **16** can be manipulated to control the display of the object. The touchpad **16** includes the ability to output haptic sensations to the user as described herein, based on a controlled value or event. For example, a volume level passing a mid-point or reaching a maximum level can cause a pulse to be output to the touchpad and to the user.

[**0061**] In one application, the controlled apparatus can be a computer system or other computing device which displays a graphical user interface and/or web pages accessed over a network such as the Internet. The user can control the direction of a cursor or other graphical object by moving a finger (or other object such as a stylus) on the touchpad **16**. The cursor or other object can be used to select and/or manipulate icons, windows, menu items, graphical buttons, slider bars, scroll bars, or other graphical objects in a graphical user interface or desktop interface. The cursor or other object can also be used to select and/or manipulate graphical objects on a web page, such as links, images, buttons, and the like. Other force sensations associated with graphical objects are described below with reference to **FIG. 7**.

[**0062**] **FIG. 3** is a perspective view of a first embodiment **40** of a touchpad **16** of the present invention for providing haptic feedback to the user. In this embodiment, one or more piezoelectric actuators **42** are coupled to the underside of the touchpad **16**. The piezoelectric actuator **42** is driven by suitable electronics, as is well known to those skilled in the art. In one embodiment, a single piezoelectric actuator **42** is positioned at or near the center of the touchpad **16**, or off to one side if space constraints of the housing require such a position. In other embodiments, multiple piezoelectric actuators **42** can be positioned at different areas of the touchpad; the dashed lines show one configuration, where an actuator **42** is placed at each corner of the pad **16** and at the center of the pad.

[**0063**] The piezoelectric actuators **42** can each output a small pulse, vibration, or texture sensation on the touchpad **16** and to the user if the user is contacting the touchpad. The entire touchpad **16** is preferably moved with the forces output by actuator(s) **42**. Preferably, the forces output on the touchpad are linear (or approximately linear) and along the z-axis, approximately perpendicular to the surface of the touchpad **16** and the top surface of computer **10**. In a different embodiment, as mentioned above, forces can be

applied to the touchpad **16** to cause side-to-side (e.g., x-y) motion of the pad in the plane of its surface in addition to or instead of z-axis motion. For example, one linear actuator can provide motion for the x-axis, and a second linear actuator can provide motion for the y-axis and/or the x-axis.

[**0064**] The frequency of a vibration output by an actuator **42** can be varied by providing different control signals to an actuator **42**. Furthermore, the magnitude of a pulse or vibration can be controlled based on the applied control signal. If multiple actuators **42** are provided, a stronger vibration can be imparted on the touchpad by activating two or more actuators simultaneously. Furthermore, if an actuator is positioned at an extreme end of the touchpad and is the only actuator that is activated, the user may experience a stronger vibration on the side of the touchpad having the actuator than on the opposite side of the touchpad. Different magnitudes and localized effects can be obtained by activating some but not all of the actuators. Since the tip of a user's finger that is touching the pad is fairly sensitive, the output forces do not have to be of a high magnitude for the haptic sensation to be effective and compelling.

[**0065**] Besides using a finger to contact the touchpad, the user may also hold other objects that directly contact the touchpad. Any haptic sensations output on the pad can be transmitted through the held object to the user's hand. For example, the user can hold a stylus having a point that contacts the touchpad **16** more precisely than a finger. Other objects may also be used. In some embodiments, specialized objects can be used to enhance the haptic sensations. For example, a stylus or other object having a flexible portion or compliance may be able to magnify at least some of the touchpad haptic sensations as experienced by the user.

[**0066**] The piezo-electric actuators **42** have several advantages for the touchpad **16**. These actuators can be made very thin and small, allowing their use in compact housings that are typical for portable electronic devices. They also require very low power, and are thus suitable for devices with limited power (e.g., powered by batteries). In some embodiments described herein, power for the actuators can be drawn off a bus connecting the computer to the touchpad (or touch screen). For example, if the touchpad **16** is provided in a separate housing, a Universal Serial Bus can connect the pad to the computer and provide power from the computer to the pad as well as data (e.g., streaming force data, force commands, and the like).

[**0067**] **FIG. 4** is a side elevational view of the embodiment **40** of the touchpad **16** of the present invention as shown in **FIG. 3**. Touchpad **16** is directly coupled to a grounded piezo-electric actuator **42** which operates to produce a force on the touchpad **16** when an electrical signal is input to the actuator. Typically, a piezo-electric actuator includes two layers which can move relative to each other when a current is applied to the actuator; here, the grounded portion of the actuator remains stationary with respect to the surrounding housing **41** while the moving portion of the actuator and the touchpad move with respect to the housing **41**. The operation of piezo-electric actuators to output force based on an input electrical signal is well known to those skilled the art.

[**0068**] The touchpad **16** can be coupled only to the actuator **42**, or can be additionally coupled to the housing of the computer device at other locations besides the actuators **42**. Preferably the other couplings are compliant connections, using a material or element such as a spring or foam. If such connections are not made compliant, then the touchpad **16** itself preferably has some compliance to allow portions of the pad to move in response to actuator forces and to convey the haptic sensations to the user more effectively.

[**0069**] Since the touchpad **16** is directly coupled to the actuator **42**, any produced forces are directly applied to the touchpad **16**. The electric signal preferably is obtained from a microprocessor and any circuitry required to convert the microprocessor signal to an appropriate signal for use with the actuator **42**.

[**0070**] **FIG. 5** is a side elevational view of another embodiment **50** of the present invention, in which the touchpad **16** is positioned on one or more springs **52**. The springs **52** couple the touchpad **16** to the rigid housing of the computer **10** and allow the touchpad **16** to be moved along the z-axis **56**. Only a very small range of motion is required to produce effective pulses (jolts) or vibrations on the pad **16**. Stops (not shown) can be positioned to limit the travel of the touchpad **16** to a desired range along the z-axis.

[**0071**] An actuator **54** is also coupled to the touchpad **16** to impart forces on the touchpad and cause the touchpad **16** to move along the z-axis. In the present embodiment, actuator **54** is a linear voice coil actuator, where the moving portion (bobbin) of the actuator is directly coupled to the touchpad **16**. The actuator **54** is grounded to the computer **10** housing and outputs a linear force on the touchpad **16** and thus drives the touchpad along the z-axis. A short pulse or jolt can be output, or the moving portion of the actuator can be oscillated to provide a vibration having a particular desired frequency. The springs **52** cause the touchpad **16** to return to a rest position after a force from the actuator causes the touchpad to move up or down. The springs can also provide a compliant suspension for the touchpad **16** and allow forces output by the actuator **54** to be amplified as explained above. Different types of spring elements can be used in other embodiments to couple the touchpad **16** to the rigid housing, such as leaf springs, foam, flexures, or other compliant materials.

[**0072**] In some embodiments, the user is able to push the touchpad **16** along the z-axis to provide additional input to the computer **10**. For example, a sensor can be used to detect the position of the touchpad **16** along the z-axis, such as an optical sensor, magnetic sensor, Polhemus sensor, and the like. The position on the z-axis can be used to provide proportional input to the computer, for example. In addition, other types of forces can be output along the z-axis, such as spring forces, damping forces, inertial forces, and other position-based forces, as disclosed in U.S. Pat. No. 6,563,487. In addition, 3-D elevations can be simulated in the graphical environment by moving the pad to different elevations along the z-axis. If the pad **16** can be used as an analog input depending on the distance the entire pad is moved along the z-axis, and/or if kinesthetic (force) feedback is applied in the z-axis degree of freedom, then a greater range of motion for the pad **16** along the z-axis is desirable. An elastomeric layer can be provided if the touchpad **16** is able to be pressed by the user to close a switch and provide button or switch input to the computer **10** (e.g., using contact switches, optical switches, or the like). If such z-axis movement of the pad **16** is allowed, it is preferred that the z-axis

movement require a relatively large amount of force to move the pad at least initially, since such z-axis movement may not be desired during normal use of the pad by the user.

[0073] The voice coil actuator **54** preferably includes a coil and a magnet, where a current is flowed through the coil and interacts with the magnetic field of the magnet to cause a force on the moving portion of the actuator (the coil or the magnet, depending on the implementation), as is well known to those skilled in the art and is described in, for example, U.S. Pat. No. 6,184,868. Other types of actuators can also be used, such as a standard speaker, an E-core type actuator (as described in U.S. Pat. No. 6,704,001, which is hereby incorporated herein by reference as if set forth fully herein), a solenoid, a pager motor, a DC (direct current) motor, moving magnet actuator (described for example in U.S. Pat. No. 6,704,001, or other type of actuator. Furthermore, the actuator can be positioned to output linear motion along an axis perpendicular to the z-axis or along another direction different from the z-axis (rotary or linear), where a mechanism converts such output motion to linear motion along the z-axis as is well known to those skilled in the art.

[0074] The touchpad **16** can also be integrated with an elastomeric layer and/or a printed circuit board in a sub-assembly, where one or more actuators are coupled to the printed circuit board to provide tactile sensations to the touchpad **16**. Helical springs can also be provided to engage electrical contacts. Or, multiple voice coil actuators can be positioned at different locations under the touchpad **16**. These embodiments are described in U.S. Pat. No. 6,563,487. Any of the actuators described in that copending application can also be used in the present invention.

[0075] **FIG. 6** is a side elevational view of a third embodiment **60** of the haptic touchpad **16** of the present invention. In this embodiment, the stationary portion of the actuator is coupled to the touchpad **16**, and the moving portion of the actuator is coupled to an inertial mass to provide inertial haptic sensations.

[0076] Touchpad **16** can be compliantly mounted to the rigid housing of the computer device similarly to the embodiments described above. For example, one or more spring elements **62** can be coupled between the touchpad and the housing. These springs can be helical or leaf springs, a compliant material such as rubber or foam, flexures, and the like.

[0077] One or more actuators **64** are coupled to the underside of the touchpad **16**. In the embodiment of **FIG. 6**, a piezo-electric actuator is shown. One portion **66** of each actuator **64** is coupled to the touchpad **16**, and the other portion **68** is coupled to a mass **70**. Thus, when the portion **68** is moved relative to the portion **66**, the mass **70** is moved with the portion **68**. The mass **70** can be any suitable object of the desired weight, such as plastic or metal material. The mass **70** is moved approximately along the z-axis and is not coupled to the housing, allowing free motion. The motion of the mass **70** along the z-axis causes an inertial force that is transmitted through the actuator **64** to the touchpad **16**, and the touchpad **16** moves along the z-axis due to the compliant coupling **62**. The motion of the touchpad **16** is felt by the user contacting the touchpad **16** as a haptic sensation.

[0078] In different embodiments, other types of actuators can be used. For example, a linear voice coil actuator as described for **FIG. 5** can be used, in which an inertial mass is coupled to the linear-moving portion of the voice coil actuator. Other actuators can also be used, such as solenoids, pager motors, moving magnet actuators, E-core actuators, and the like. Many actuators used for inertial haptic sensations are described in copending U.S. Pat. No. 6,211,861, which is hereby incorporated herein by reference as if set forth fully herein. Furthermore, a rotary actuator can be used, where the rotary output force is converted to a linear force approximately along the z-axis. For example, the rotary force can be converted using a flexure, as described for example in U.S. Pat. Nos. 6,693,626 and 6,697,043, both of which are hereby incorporated herein by reference as if set forth fully herein.

[0079] In the preferred linear force implementation, the direction or degree of freedom that the force is applied on the touchpad with respect to the inertial mass is important. If a significant component of the force is applied in the planar workspace of the touchpad (i.e., along the X or Y axis) with respect to the inertial mass, a short pulse or vibration can interfere with the user's object motion in one or both of those planar degrees of freedom and thereby impair the user's ability to accurately guide a controlled graphical object, such as a cursor, to a given target. Since a primary function of the touchpad is accurate targeting, a tactile sensation that distorts or impairs targeting, even mildly, is undesirable. To solve this problem, the touchpad device of the present invention applies inertial forces substantially along the Z axis, orthogonal to the planar X and Y axes of the touchpad surface. In such a configuration, tactile sensations can be applied at a perceptually strong level for the user without impairing the ability to accurately position a user controlled graphical object in the X and Y axes of the screen. Furthermore, since the tactile sensations are directed in a third degree of freedom relative to the two-dimensional planar workspace and display screen, jolts or pulses output along the Z axis feel much more like three-dimensional bumps or divots to the user that come "out" or go "into" the screen, increasing the realism of the tactile sensations and creating a more compelling interaction. For example, an upwardly-directed pulse that is output when the cursor is moved over a window border creates the illusion that the user is moving a finger or other object "over" a bump at the window border.

[0080] **FIG. 7** is a top elevational view of the touchpad **16** of the present invention. Touchpad **16** can in some embodiments be used simply as a positioning device, where the entire area of the pad provides cursor control. In other embodiments, different regions of the pad can be designated for different functions. In some of these region embodiments, each region can be provided with an actuator located under the region, while other region embodiments may use a single actuator that imparts forces on the entire pad **16**. In the embodiment shown, a central cursor control region **70** is used to position the cursor.

[0081] The cursor control region **70** of the pad **16** can cause forces to be output on the pad based on interactions of the controlled cursor with the graphical environment and/or events in that environment. The user moves a finger or other object within region **70** to correspondingly move the cursor **20**. Forces are preferably associated with the interactions of the cursor with displayed graphical objects. For example, a jolt or "pulse" sensation can be output, which is a single

impulse of force that quickly rises to the desired magnitude and then is turned off or quickly decays back to zero or small magnitude. The touchpad **16** can be jolted in the z-axis to provide the pulse. A vibration sensation can also be output, which is a time-varying force that is typically periodic. The vibration can cause the touchpad **16** or portions thereof to oscillate back and forth on the z axis, and can be output by a host or local microprocessor to simulate a particular effect that is occurring in a host application.

[**0082**] Another type of force sensation that can be output on the touchpad **16** is a texture force. This type of force is similar to a pulse force, but depends on the position of the user's finger on the area of the touchpad and/or on the location of the cursor in the graphical environment. Thus, texture bumps are output depending on whether the cursor has moved over a location of a bump in a graphical object. This type of force is spatially-dependent, i.e., a force is output depending on the location of the cursor as it moves over a designated textured area; when the cursor is positioned between "bumps" of the texture, no force is output, and when the cursor moves over a bump, a force is output. This can be achieved by host control (e.g., the host sends the pulse signals as the cursor is dragged over the grating). In some embodiments, a separate touchpad microprocessor can be dedicated for haptic feedback with the touchpad, and the texture effect and be achieved using local control (e.g., the host sends a high level command with texture parameters and the sensation is directly controlled by the touchpad processor). In other cases a texture can be performed by presenting a vibration to a user, the vibration being dependent upon the current velocity of the user's finger (or other object) on the touchpad. When the finger is stationary, the vibration is deactivated; as the finger is moved faster, the frequency and magnitude of the vibration is increased. This sensation can be controlled locally by the touchpad processor (if present), or be controlled by the host. Local control by the pad processor may eliminate communication burden in some embodiments. Other spatial force sensations can also be output. In addition, any of the described force sensations herein can be output simultaneously or otherwise combined as desired.

[**0083**] Different types of graphical objects can be associated with tactile sensations. Tactile sensations can output on the touchpad **16** based on interaction between a cursor and a window. For example, a z-axis "bump" or pulse can be output on the touchpad to signal the user of the location of the cursor when the cursor is moved over a border of a window. When the cursor is moved within the window's borders, a texture force sensation can be output. The texture can be a series of bumps that are spatially arranged within the area of the window in a predefined pattern; when the cursor moves over a designated bump area, a bump force is output on the touchpad. A pulse or bump force can be output when the cursor is moved over a selectable object, such as a link in a displayed web page or an icon. A vibration can also be output to signify a graphical object which the cursor is currently positioned over. Furthermore, features of a document displaying in a window can also be associated with force sensations. For example, a pulse can be output on the touchpad when a page break in a document is scrolled past a particular area of the window. Page breaks or line breaks in a document can similarly be associated with force sensations such as bumps or vibrations.

[**0084**] Furthermore, a menu items in a displayed menu can be selected by the user after a menu heading or graphical button is selected. The individual menu items in the menu can be associated with forces. For example, vertical (z-axis) bumps or pulses can be output when the cursor is moved over the border between menu items. The sensations for certain menu choices can be stronger than others to indicate importance or frequency of use, i.e., the most used menu choices can be associated with higher-magnitude (stronger) pulses than the less used menu choices. Also, currently-disabled menu choices can have a weaker pulse, or no pulse, to indicate that the menu choice is not enabled at that time. Furthermore, when providing tiled menus in which a sub-menu is displayed after a particular menu element is selected, as in Microsoft Windows™, pulse sensations can be sent when a sub-menu is displayed. This can be very useful because users may not expect a sub-menu to be displayed when moving a cursor on a menu element. Icons can be associated with textures, pulses, and vibrations similarly to the windows described above. Drawing or CAD programs also have many features which can be associated with similar haptic sensations, such as displayed (or invisible) grid lines or dots, control points of a drawn object, and the like.

[**0085**] In other related interactions, when a rate control or scrolling function is performed with the touchpad (through use of the cursor), a vibration can be displayed on the device to indicate that scrolling is in process. When reaching the end of a numerical range that is being adjusted (such as volume), a pulse can be output to indicate that the end of the range has been reached. Pulse sensations can be used to indicate the location of the "ticks" for discrete values or settings in the adjusted range. A pulse can also be output to inform the user when the center of the range is reached. Different strength pulses can also be used, larger strength indicating the more important ticks. In other instances, strength and/or frequency of a vibration can be correlated with the adjustment of a control to indicate current magnitude of the volume or other adjusted value. In other interactions, a vibration sensation can be used to indicate that a control function is active. Furthermore, in some cases a user performs a function, like selection or cutting or pasting a document, and there is a delay between the button press that commands the function and the execution of the function, due to processing delays or other delays. A pulse sensation can be used to indicate that the function (the cut or paste) has been executed.

[**0086**] One specific application of haptic feedback is to provide a realistic emulation of a button press (and release) to the operator, for example of a snap button associated with an icon displayed on the touch pad of the computer or laptop, or on the touch screen of a similar device. In this case, a graphical representation of a button can be displayed on the touch pad. When that graphical representation is touched and/or pressed, either directly by the operator's finger or indirectly using a stylus or similar object, a haptic response is generated by the touchpad which simulates the feel of a snap button.

[**0087**] Nearly all buttons, not only snap buttons, have a fixed tactile feel dictated by their mechanical construction. This feel is describable by a force profile that relates the amount of depression of the button (position) to a force. As

an example, a typical snap button would have force profile similar to that shown in **FIG. 9**.

[**0088**] Mechanical buttons provide a click sensation while pressed down and a similar sensation when released, typically with some hysteresis between the two force profiles, as seen in **FIG. 10**. Assigning a haptic effect to both the push down and release touchscreen events allows for better recreation of the feel of a mechanical button, especially when the operator rests his/her finger or the stylus lightly on the surface.

[**0089**] Even when the user removes his fingers, the forces can still be felt. The button up event in the graphical user interface or display is triggered when a pressure threshold is crossed so the user is still momentarily touching the touch screen when the button up or release effect is played.

[**0090**] A single effect can be used for both the button down and button up effects, or different effects can be used to capture some of the hysteresis effects in real mechanical buttons.

[**0091**] In touch screens designed to operate in open-loop control fashion, whether moving from side to side, up and down or out of the plane, short bursts of periodic signals such as square or sine waves can be used to simulate the sensation of a button click event. In such waveforms, the discontinuities, or rapid changes in direction, create a significant sensation to the user. One issue with using this type of periodic signals is the presence of multiple discontinuities in the waveform. For example, a square wave pulse first rapidly moves the touch screen in one direction, followed by a direction reversal, followed by movement in the original direction. If the waveform is of sufficient duration, this type of effect result in the user feeling multiple events occurring at each direction change. This can be confusing to the user as typically a mechanical button has a single event tactilely transmitted when the button is pressed down and one upon release.

[**0092**] To realize the single click event of a typical button, a waveform with a single discontinuity as depicted in **FIG. 11** is provided by the invention. This waveform is symmetric so that the final position of the touch screen is relatively close to the original position before the waveform is applied.

[**0093**] Other discontinuity waveforms such as a saw-up and saw-down can be used, (See **FIG. 13**). This in accordance with an aspect of the invention, there is provided a method for simulating a button press using haptic feedback imparted through a touch surface. The method, depicted in **FIG. 15**, includes sensing a contact with said touch surface (**151**), and moving (**152**) the touch surface responsive to the contact in accordance with a first single-discontinuity waveform.

[**0094**] Another specific application of haptic feedback relates to computer graphical user interfaces (GUIs), as explained with reference to laptop computer **10** of **FIG. 1**. Some buttons displayed in the computer graphical display **12** are used for scrolling up or scrolling down, such as the scroll bar widget of **FIG. 14**. The widget is manipulated by moving a cursor, for example using touchpad **16**, to coincide with the location of the widget on the display. When this occurs, an action is triggered, for example scrolling of the displayed text. It is often difficult to control the scrolling speed to the user's satisfaction. A user will miss the target text because the response is too fast. Conversely, when the response is too slow, the scrolling action takes too much time. Corrections can also take time. In accordance with the invention, on button-down for example—that is, when the cursor is positioned over the scroll button or widget or similar graphical object, a haptic effect can be provided repetitively commensurately with the scrolling action. The frequency of the repetition can be varied according the speed of the scroll, for example, fast pop or fast scrolling.

[**0095**] More generally, any action whose extent depends on manipulation of a cursor can be tied to haptic feedback which similarly varies in extent. Thus in accordance with a further aspect of the invention illustrated in **FIG. 16**, there is provided a method for providing haptic feedback representative of the extent to which an action triggered by manipulation of a cursor relative to a graphical object displayed on a display screen is occurring. The method includes associating (**161**) the location of the cursor in the display screen with a contact location on a touch screen, and providing (**162**) haptic feedback by way of the touch screen, the haptic feedback having an extent corresponding to the extent of the action.

[**0096**] The invention is not limited to applications using a cursor. A graphical object displayed on a display of a computer for example, is manipulated in size, position, orientation, color, and the like by a contact between the user and a touch input device such as a touchpad or touch screen. A characteristic of the manipulation, such as its speed of translation, is correlated with a characteristic of the contact, such as the speed of the user's finger as it moves over the touch input device, and this is reflected in the manner the graphical object is displayed—that is, the speed of the graphical object at it is translated in the graphical environment displayed by the computer display may be set, at least in part, in response to the speed of motion of the user's contact with the touch input device. Moreover, the extend of the haptic feedback provided to the user by way of the touch screen for example is a function of the characteristic of the manipulation. Specifically, if a graphical object is a scroll bar which is being moved by use of the touch screen, then the speed at which it is moved provides the basis for varying the haptic feedback. If the feedback is repetitive clicks, then the faster the scroll bar widget is moved, the faster the clicks the clicks are imparted. The magnitude of the force can be varied in a similar manner, and characteristics other than speed, such as acceleration, deceleration, direction, and so forth can be used. Further, other graphical objects can be manipulated in this manner. For example, with reference to **FIG. 17**, in a graphical game using a deck of cards **171** displayed on a screen **172** and having an input device such as a sliding a slider switch **173** which, when actuated by the user, causes the portion of the screen **174** in which the deck of cards is displayed to display the cards one after the other in the same location, the rate at which one card replaces the next can be made a function of the position of the slider **175** of the slider switch **173**, and haptic feedback imparted to the slider switch can be function of that rate. A similar concept applies to a zoom function of a displayed image, or photo editing program in which colors are manipulated. A color palate can be displayed, and a change in the position of the user's finger on the touch screen or touch pad would cause the addition or subtraction of a color component, and the rate

of this addition or subtraction can be used to provide haptic feedback whose extent is commensurate with this rate change.

[0097] Thus in accordance with an aspect of the invention, there is provided a method for providing haptic feedback in response to a manipulation of a graphical object. The method, described with reference to **FIG. 18**, includes correlating (**181**) a characteristic of the manipulation of the graphical object with a characteristic of a contact of a touch screen, and imparting (**182**) a force to the touch screen at an extent which varies in accordance with the characteristic of the manipulation.

[0098] Touch screens often have scroll bars to display text in a limited view window. When using a touch screen it is difficult for the user to determine if there is engagement with the scroll bar when sliding up down, particularly if the user's attention is directed to a different part of the display screen, as is often necessary. In accordance with an embodiment of the present invention, a haptic effect can be continuously provided as long as the user is engaged with the scroll bar and discontinued when the user is not engaged, either because of volition, moving the wrong direction, or by not pressing hard enough on a touch screen or touch pad. Thus in accordance with another aspect of the invention, there is provided a method for providing haptic feedback representative of the relative location of a cursor and a graphical object displayed on a display screen. This method, illustrated in **FIG. 19**, includes associating (**191**) the location of the cursor in the display screen with a contact location on a touch screen, and providing (**192**) haptic feedback by way of the touch screen as long as the location of the cursor on the display screen assumes a predetermined relationship (**193**) with the location of the graphical object on the touch screen. Otherwise, the haptic feedback is terminated (**194**).

[0099] Furthermore, the magnitude of output forces on the touchpad can depend on the event or interaction in the graphical environment. For example, the force pulse can be a different magnitude of force depending on the type of graphical object encountered by the cursor. For example, a pulses of higher magnitude can be output when the cursor moves over windows, while pulses of lower magnitude can be output when the cursor moves over icons. The magnitude of the pulses can also depend on other characteristics of graphical objects, such as an active window as distinguished a background window, file folder icons of different priorities designated by the user, icons for games as distinguished from icons for business applications, different menu items in a drop-down menu, and the like. The user or developer can also preferably associate particular graphical objects with customized haptic sensations.

[0100] User-independent events can also be relayed to the user using haptic sensations on the touchpad. An event occurring within the graphical environment, such as an appointment reminder, receipt of email, explosion in a game, and the like, can be signified using a vibration, pulse, or other time-based force. The force sensation can be varied to signify different events of the same type. For example, vibrations of different frequency can each be used to differentiate different events or different characteristics of events, such as particular users sending email, the priority of an event, or the initiation or conclusion of particular tasks (e.g., the downloading of a document or data over a network). When the host system is "thinking," requiring the user to wait while a function is being performed or accessed (usually when a timer is displayed by the host) it is often a surprise when the function is complete. If the user takes his or her eyes off the screen, he or she may not be aware that the function is complete. A pulse sensation can be sent to indicate that the "thinking" is over.

[0101] A software designer may want to allow a user to be able to select options or a software function by positioning a cursor over an area on the screen using the touchpad, but not require pressing a physical button or tapping the touchpad to actually select the option. Currently, it is problematic to allow such selection because a user has physical confirmation of execution when pressing a physical button. A pulse sent to the touchpad of the present invention can act as that physical confirmation without the user having to press a button or other control for selection. For example, a user can position a cursor over a web page element, and once the cursor is within the desired region for a given period of time, an associated function can be executed. This is indicated to the user through a tactile pulse sent to the pad **16**.

[0102] The above-described force sensations can also be used in games or simulations. For example, a vibration can be output when a user-controlled racing car is driving on a dirt shoulder of a displayed road, a pulse can be output when the car collides with another object, and a varying-frequency vibration can be output when a vehicle engine starts and rumbles. The magnitude of pulses can be based on the severity of a collision or explosion, the size of the controlled graphical object or entity (and/or the size of a different graphical object/entity that is interacted with), and the like. Force sensations can also be output based on user-independent events in the game or simulation, such as pulses when bullets are fired at the user's character.

[0103] The above haptic sensations can be similar to those described in U.S. Pat. Nos. 6,243,078 and 6,211,861. Other control devices or grips that can include a touchpad **16** of the present invention in its housing include a game pad, mouse or trackball device for manipulating a cursor or other graphical objects in a computer-generated environment; or a pressure sphere or the like. For example, the touchpad **16** can be provided on the housing of a computer mouse to provide additional input to the host computer. Furthermore, selective disturbance filtering of forces, as described in U.S. Pat. No. 6,020,876, and shaping of force signals to drive the touchpad with impulse waves as described in U.S. Pat. No. 5,959,613, can be used with the present invention. Both of these aforementioned patent disclosures are hereby incorporated herein by reference as if set forth fully herein. Such impulses are also effective when driven with stored power in a battery on the computer **10** or from a bus such as USB connected to a host computer.

[0104] **FIG. 20** illustrates an actuator **100** for generating haptic effects in accordance with one embodiment of the present invention useable in connection with a touch screen apparatus. Actuator **100** includes two L-shaped pole pieces **110**, **112**, first and second structural elements **102** and **104** and first and second biasing elements **106** and **108**. Pole pieces **110**, **112**, may be made of standard magnetic steels with high permeability, or other suitable ferromagnetic materials such as soft magnetic materials with high magnetic permeability (e.g., iron, nickel, magnetic alloys) or sintered

materials such as ferrite, as are well known to those of ordinary skill in the art. They need not be made of the same material and they are further coupled to coils **114***a,* **114***b* to form electromagnetic devices ("magnetic device"). Coils **114***a,* **114***b,* which may be made of copper or other suitable electric conductors, are coupled to one or more current sources for generating magnetic fields when current passes through the coils **114***a,* **114***b.* In another embodiment one of the pole pieces need not include a coil as long, as it is formed of a ferromagnetic material.

[**0105**] Actuator **100** further includes structural elements **102**, **104** and first and second biasing elements **106**, **108** to form a frame for the actuator **100**. It should be noted that structural elements **102**, **104** and biasing elements **106**, **108** can be manufactured out of a single piece of material such as metal or plastic. Alternatively, structural elements **102**, **104** and biasing elements **106**, **108** may be manufactured independently. First structural element **102**, as shown in **FIG. 20**, includes apertures **120**, **122**, which are used for coupling or fastening to a housing, a display or a touch-sensitive panel. Similarly, structural element **104** also contains apertures **124**, **126** for similar coupling. Structural elements **102**, **104** are made of reasonably rigid materials, such as plastic, aluminum, and the like, for providing physical support for the pole pieces **110**, **112**. Biasing elements **106**, **108**, which may be springs, flexure springs, flexible blades, flexible members, elastomeric components, foam components, and the like, are made of elastic or relatively flexible materials that can be compressed and/or stretched within a predefined range. In one embodiment the biasing elements **106**, **108** and structural elements **102**, **104** are made of a plastic material with the biasing elements formed to be made thinner (and hence more flexible) than the structural elements.

[**0106**] Referring again to **FIG. 20**, pole pieces **110** and **112** are coupled to structural elements **102** and **104**, respectively. Pole piece **110** is placed adjacent to pole piece **112** with three magnetic gaps **140**, **142** and **144** between the pole pieces **110**, **112**. The width of the gap **144** situated between the main bodies of the pole pieces **110**, **112** is, in one embodiment, in a range of about 1 to about 5 millimeters ("mm"). The width of the gaps **140**, **142** is in one embodiment, in a range of about 0.25 to about 0.75 mm. Air pockets **130**, **132**, which can be of any shape, provide space for pole pieces **110**, **112** to move. They are not required, however. Because gaps **140**, **142** are much smaller than gap **144** the attractive magnetic force at gaps **140**, **142** dominates over any attractive force across gap **144**.

[**0107**] In operation, the biasing elements **106**, **108** provide minimal force if there is no current passing through the coils **114** and the actuator is (accordingly) in a relaxed state. Under this no power condition, the actuator attains a first equilibrium position as shown, for example, in **FIG. 20**. When power is applied to coil(s) **114***a,* **114***b* an input current passes through the coil(s) creating magnetic flux lines **150** in the pole pieces **110**, **112** and across gaps **140**, **142**. This process acts to generate an attractive force or attractive magnetic force between the pole pieces **110**, **112** when the coils are wound so that the electromagnetic effects do not cancel one another. The term attractive force and attractive magnetic force are used interchangeably herein. The attractive magnetic force acts against the biasing elements **106**, **108** and pulls the pole pieces **110**, **112** closer together at the gaps **140**, **142**. In accordance with the embodiment shown in **FIG.20**, under the attractive magnetic force, with structural element **102** held fixed, the pole piece **112** moves in a direction from right to left (as indicated by arrow **138**) toward the pole piece **110**. Pole piece **110**, in this embodiment, may be fastened or secured to structural element **102**, which may be further secured to a housing, touch-sensitive panel or display device. When one of the pole pieces **110**, **112** is displaced enough distance within the gaps **140**, **142**, a second equilibrium position is reached as increasing spring force is applied in an opposite direction by biasing elements **106**, **108**. When power is then reduced or removed, the biasing elements **106**, **108** force the pole pieces **110**, **112** back to their original no-power position, also known as the first equilibrium position as described earlier.

[**0108**] It should be noted that the attractive force can be manipulated by varying an amount of current passing through the coils **114***a,* **114***b.* Accordingly, the acts of varying the magnitude, duration and pulse repetition of current passing through the coils **114***a,* **114***b* can be used to vary the level and quality of sensation provided by the haptic effect. It should be further noted that the haptic effect, which is also known as tactile, force feedback or haptic sensation, can be a pulse, vibration, spatial texture, weight or other physical properties sensible through feeling and touch. The term haptic effect and haptic sensation will be used interchangeably herein.

[**0109**] The present invention allows a user to manipulate the frequency of the movements between the pole pieces **110**, **112** by adjusting the periodicity of applied input current. The input current means a current passing through the coils **114***a,* **114***b* for generating magnetic fields and magnetic flux in the pole pieces **110**, **112** and across the magnetic gaps **140**, **142**. It should be noted that input currents having different waveform shapes will produce different haptic effect; when an input current is in a square waveform, the haptic effect will be different than when the input current waveform has a sinusoidal shape. In one embodiment, the frequency of haptic effects may have a range between about 40 and about 300 Hertz (Hz).

[**0110**] An advantage of using such a magnetic circuit with an actuator **100** as described above is to efficiently generate force. Unlike other methods, a permanent magnet is not required to implement the present invention. One could be included to add a small magnetic bias to the magnetic circuit, however. Another advantage of actuator **100** is that it may be made very compact in size. For example, in one embodiment actuator **100** may be about 1.5 inches long, 0.6 inches high and 0.3 inches deep. Depending on the orientation of the actuator **100** with respect to a touch-sensitive panel, it can excite either in-plane or out-of-plane motion between the touch-sensitive panel and the display device for haptic sensation. It should be noted that the L-shaped pole pieces as illustrated in **FIG. 20** represent merely one embodiment and other arrangements of the pole pieces may also be used although the L-shaped pole pieces are believed to be relatively space efficient for this application.

[**0111**] **FIG. 21** illustrates two alternative embodiments of electromagnet components **200** and **220** capable of generating attractive magnetic force in accordance with the present invention. Electromagnet component **200** includes a C-shaped pole piece **202**, an I-shaped pole piece **204**, and a

single coil **206**. Pole pieces **202**, **204** may be made of any suitable ferromagnetic materials as discussed above.

[**0112**] C-shaped pole piece **202** is placed adjacent to pole piece **204** with two gaps **208**. The width of the gap **208** is approximately 0.5 mm. When the input current passes through the coils **206**, a magnetic flux **210** is generated. Magnetic flux **210** generates the attractive magnetic force between the pole pieces **202**, **204**. The attractive magnetic force causes the pole piece **204** to move closer to the pole piece **202**. Alternatively, the attractive magnetic force can cause pole piece **202** to move closer to pole piece **204** if pole piece **204** is relatively fixed. Haptic effects may be generated by the movements caused by the attractive magnetic force between the pole pieces **202**, **204**.

[**0113**] Electromagnet component **220** includes an E-shaped pole piece **222**, an I-shaped pole piece **224**, and a coil **226**. Pole pieces **222**, **224** may be constructed as discussed above. E-shaped pole piece **222** is placed adjacent to the I-shaped pole piece **224** with a gap **228**. The width of the gap **228** is approximately 0.5 mm. When the input current passes through coils **226**, magnetic flux lines **230** are generated. Magnetic flux lines **230** cause an attractive magnetic force between pole pieces **222**, **224**. The attractive magnetic force causes pole piece **224** to move closer to pole piece **222** and effectively narrow the width of the gap **228**. In another embodiment, the attractive magnetic force causes the pole piece **222** to move closer to pole piece **224** if pole piece **224** is fastened to housing. A haptic effect may be generated by movements between the pole pieces.

[**0114**] **FIG. 22** is an actuator **300** illustrating an alternative embodiment of the actuator illustrated in **FIG. 20** in accordance with one embodiment of the present invention. Actuator **300** includes two L-shaped pole pieces **110**, **112**, structural elements **102**, **104**, and biasing element **302**. Pole pieces **110**, **112** are further coupled to coils. **114***a*, **114***b* to form magnetic devices. Coils **114***a*, **114***b* are coupled to one or more current sources for causing magnetic flux in pole pieces **110**, **112**.

[**0115**] Actuator **300** further includes structural elements **102**, **104** and biasing element **302** to form a frame. It should be noted that structural elements **102**, **104** and biasing element **302** can be manufactured at the same time and on a single frame. Alternatively, structural elements **102**, **104** and biasing element **302** may be formed as separate structures that are then assembled together. Structural elements **102**, **104** are fabricated or discussed above to provide physical support for the pole pieces **110**, **112**. Biasing element **302**, which may be formed as described above, is made of an elastic material that may be compressed or stretched within a predefined range. Referring to **FIG. 22**, it should be noted that biasing element **302** may be located anywhere as long as it is coupled with structural elements **102**, **104** and provides its biasing or spring function in opposition to the attractive gap-closing magnetic force of the magnetic devices.

[**0116**] **FIG. 23** is an alternative embodiment of an actuator **400** in accordance with one embodiment of the present invention. Actuator **400** includes two L-shaped pole pieces **110**, **112**, structural elements **102**, **104**, and biasing elements **402**, **404**. Pole pieces **110**, **112** are further coupled to coils **114***a*, **114***b* to form magnetic devices. Coils **114***a*, **114***b* are coupled to one or more current sources for creating magnetic flux in pole pieces **110**, **112**.

[**0117**] Actuator **400** further includes structural elements **102**, **104** and biasing elements **402**, **404** to form a frame that allows some movements between the structural elements **102**, **104**. It should be noted that structural elements **102**, **104** and biasing elements **402**, **404** are manufactured separately and they need to be assembled to form a frame. Structural elements **102**, **104** are made of rigid materials, such as plastic, steel, aluminum, and so forth, to provide physical support for the pole pieces **110**, **112**. Biasing elements **402**, **404** may be implemented as discussed above and may be made of elastic materials that can be compressed or stretched within a predefined range. Referring to **FIG. 23**, it should be noted that any type of biasing element may be used as long as it facilitates movement between the pole pieces **110**, **112** and may be arranged to counter the attractive gap-closing force of the magnetic devices.

[**0118**] **FIG. 24** illustrates a system having an actuator **100** in accordance with one embodiment of the present invention. The system includes a case **502**, a touch-sensitive panel **504**, and an actuator **100**. Actuator **100** includes two L-shaped pole pieces **110**, **112**, structural elements **102**, **104**, and biasing elements **106**, **108**. Pole pieces **110**, **112** are further coupled to coils **114***a*, **114***b* to form magnetic devices. Coils **114***a*, **114***b* are coupled to one or more current sources for creating magnetic flux in pole pieces **110**, **112**. Biasing elements **106**, **108** may be implemented as discussed above and may be made of elastic materials that may be compressed or stretched within a predefined range.

[**0119**] Referring to **FIG. 24**, one side of actuator **100** is coupled to the case **502** while another side of actuator **100** is coupled to the touch-sensitive panel **504**. Structural element **102**, as shown in **FIG. 24**, is fastened to the case **502**. In this embodiment, the case **502** is rigid and does not move easily. In one embodiment, apertures **120**, **122** may be used by fasteners to couple the structural element **102** to the case **502**. Structural element **104** is, in turn fastened to a touch-sensitive panel **504**. Touch-sensitive panel **504**, in one embodiment, may be made of relatively flexible transparent materials. In one embodiment, holes **124**, **126** may be used to fasten the structural element **104** to the touch-sensitive panel **504**.

[**0120**] When power is applied and input current begins to pass through the coils **114***a*, **114***b*, the attractive gap-closing force between pole pieces **110** and **112** starts to increase. The attractive force causes the pole piece **112** to be attracted to the pole piece **110** where pole piece **110** is held fixed. Pole piece **112** begins to move toward the pole piece **110** to close the gaps **140**, **142** until it reaches a second equilibrium position as illustrated in **FIG. 25**. When power is reduced or removed, the attractive force between pole pieces **110** and **112** begins to reduce and consequently, the pole piece **112** begins to move back to its original position in response to the return force provided by the biasing elements **106**, **108**. The biasing elements **106**, **108** continue to force the pole piece **112** to move back until it reaches the first equilibrium position as shown in **FIG. 20**. The movements between the pole pieces **110**, **112** cause similar movements between the structural elements **102**, **104**. In one embodiment, the movements between the structural elements **102**, **104** generate haptic effects or haptic sensation. Since touch-sensitive panel **504** is fastened to structural element **104**, haptic effects on the touch-sensitive panel **504** occur when the movement between the structural elements **102**, **104** occurs. Depending

on the orientation of the actuator **100** with respect to the touch-sensitive panel **504**, haptic effects may excite either in-plane or out-of-plane motion with respect to the touch-sensitive panel **504**.

[**0121**] **FIG. 26** illustrates, in a somewhat exaggerated manner to improve visibility, a second equilibrium position of an actuator **600** in accordance with one embodiment of the present invention. Actuator **600**, which is similar to actuator **100**, includes two L-shaped pole pieces **110**, **112**, structural elements **102**, **104**, and biasing elements **602**, **604**. Pole pieces **110**, **112** are further coupled to coils **114***a*, **114***b* to form magnetic devices. Coils **114***a*, **114***b* are coupled to one or more current sources for generating magnetic flux in pole pieces **110**, **112**.

[**0122**] When power is off, the biasing elements **602**, **604** provide minimal force to keep the actuator **600** in the first equilibrium position as described and shown in **FIG. 20**. When power is on, the input current passes through the coils **114** and generates magnetic flux in the pole pieces **110**, **112**. Magnetic flux causes an attractive magnetic force between the pole pieces **110**, **112** across gaps **140**,**142**. The attractive magnetic force acts against the biasing elements **602**, **604** and pulls the pole pieces **110**, **112** closer together at the gaps **140**, **142**. Pole piece **110**, in this embodiment, may be secured to a case via the structural element **102**, while pole piece **112** is secured to a touch-sensitive panel via the structural element **104**. The attractive magnetic force causes the pole piece **112** to move from right to left (as indicated by **138**) toward the pole piece **110**. When the pole piece **110** is displaced enough distance, a second equilibrium position is reached as shown in **FIG. 25**. When power is reduced or removed, the biasing elements **602**, **604** force the pole piece **112** back to the first equilibrium position as discussed earlier.

[**0123**] **FIG. 26** illustrates a system configuration having an actuator in accordance with one embodiment of the present invention. The system configuration includes a touch-sensitive panel or touch screen **702**, a display panel **704**, and a case **706**. Touch-sensitive panel **702**, in one embodiment, is made of substantially transparent materials, and is capable of transmitting light so that objects or images displayed in the display **704** may be seen through the touch-sensitive panel **702**. The display **704** can be any type of display such as a cathode ray tube (CRT), liquid crystal display (LCD), plasma display, flat panel display or the like or could even be a static illustration. Both touch-sensitive panel **702** and display **704** may be installed in the case **706**. In an alternative embodiment, the touch-sensitive panel **702** and the display **704** may be located separately with the actuator mounted between the touch-sensitive panel **702** and a relatively fixed location so that haptic effects are provided to the touch-sensitive panel but the display is located elsewhere.

[**0124**] In one embodiment, touch-sensitive panel **702** is further divided into various regions **720** and the regions are further separated by borders **722**. Touch-sensitive panel **702** accepts a user's selection when only a region **720** is touched. Conversely, touch-sensitive panel **702** rejects a user's selection when a border **722** is touched. Touch-sensitive panel **702** further includes four actuators **710** and, depending on their orientation, actuators **710** can excite either in-plane or out-of-plane motion with respect to the touch-sensitive panel **702** for haptic sensation. Actuators **710** may be installed to move touch-sensitive panel for relative to display **704**.

[**0125**] **FIG. 27** is a flow diagram illustrating a method for generating a haptic effect in accordance with one embodiment of the present invention. A process for generating haptic sensation starts at block **802**. In one embodiment, the process can be activated by a user who touches a touch-sensitive panel possibly in a predetermined location or locations. In another embodiment, the process is activated by a touch signal or contact signal sent by the touch-sensitive panel, which indicates that a selection has been made by a user.

[**0126**] At block **804**, the process receives a contact signal from the touch-sensitive, which may be sent by a touch-sensitive panel according to a selection made by a user. In another embodiment, a computer or controller sends a contact signal. Upon receipt of the contact signal, the process moves to the next block **806**.

[**0127**] At block **806**, the process instructs a controller to provide an input current according to the contact signal. In one embodiment, the input current is passing through at least one electromagnet device of an actuator to generate magnetic flux in a pair of pole pieces.

[**0128**] At block **808**, the magnetic flux creates attractive magnetic force between the electromagnet devices which opposes a biasing force imparted by biasing elements arranged to counter the attractive magnetic force. The attractive magnetic force causes the pole pieces of the electromagnet devices to attract to each other. The process moves to the next block.

[**0129**] At block **810**, the attractive magnetic force creates a movement between the electromagnet devices. In one embodiment, one pole piece of one electromagnet device is physically moved closer to another pole piece of another electromagnet device.

[**0130**] At block **812**, the current is removed.

[**0131**] At block **814**, a biasing element provides a bias force or return force to control the movement between the electromagnet devices within a predefined range. When the power is reduced or turned off in block **812**, the pole pieces of electromagnet devices move back to their original positions.

[**0132**] With turning on and off the power continuously, a continuous movement between the electromagnet devices is created. Accordingly, the haptic effect is generated in response to the movement between the electromagnet devices. It should be noted that the frequency and amplitude of the movements between the electromagnet devices can be controlled by controlling the input current.

[**0133**] **FIG. 28** is a block diagram illustrating a system having an actuator in accordance with one embodiment of the present invention. The system includes a computer or central processing unit (CPU) **906** with appropriate interfaces **908** to a memory **910** for storing program steps for controlling the processor **906**, **912** for controlling a display device **914**, **916** for communicating with a touch-sensitive panel **918** and **920** for driving an amplifier circuit (if required) which in turn drives actuator **924**. Actuator **924** is arranged to create relative movement between display device **914** and touch-sensitive panel **918**. The relative movement may be in the plane of the touch-sensitive panel, out of the plane of the touch-sensitive panel, or same

combination of the two. When the touch panel **904** is touched or depressed, it sends a contact signal to computer **906** via connection **926**. The contact signal indicates that the touch panel has been selected or touched. Computer **906**, which can be any general purpose computer operating under the control of suitable software and for firmware, is coupled to amplifier **922** via connection **928** and instructs amplifier **922** to provide input current to the actuator **924** over connection **930**. Upon receipt of an instruction from the computer **906**, amplifier **922** provides an input current to the actuator **924** via connection **930**. Actuator **924** provides a haptic sensation or effect to the touch-sensitive panel **918**. The processor **906** (or, potentially, another device (not shown) provides a display image or image to display device **914**.

[**0134**] Turning finally to **FIGS. 29, 30** and **31**, these figures illustrate how areas of a touch pad and/or a touch screen or other similar touch input device may be utilized. In each of the figures areas of the touch sensitive surface of the touch input device are associated with particular inputs. In **FIG. 29**, a "+" area and a "−" area are provided. This could be used, for example, to zoom in (+) or zoom out (−) in a graphical environment having a pictorial representation of an image. **FIG. 30** illustrates a version with "+X", "−X", "+Y" and "−Y" which could be used to translate an object or to rotate an object, or to otherwise interact with a graphically depicted object, as desired. Finally, **FIG. 31** provides a similar arrangement to that shown in **FIG. 30**, however, intermediate values (e.g., some −X and some +Y at the same time) may be input in an intuitive manner. In some embodiments, these areas along with some indication as to what they are intended to control at a given point in time may be displayed on a touch screen and haptic feedback provided to the user indicative of rates of input, boundaries and similar conditions in the graphical environment, and the like.

[**0135**] While this invention has been described in terms of several preferred embodiments, it is contemplated that alterations, permutations, and equivalents thereof will become apparent to those skilled in the art upon a reading of the specification and study of the drawings. For example, many different types of actuators can be used to output tactile sensations to the user. Furthermore, many of the features described in one embodiment can be used interchangeably with other embodiments. Furthermore, certain terminology has been used for the purposes of descriptive clarity, and not to limit the present invention. The invention, therefore, is not to be restricted except in the spirit of the appended claims.

What is claimed is:

1. A haptic feedback touch control for inputting signals to a computer and for outputting forces to a user of the touch control, the touch control comprising:

a touch input device including a touch surface operative to input a position signal to a processor of said computer based on a location on said touch surface which said user contacts; and

at least one actuator coupled to said touch input device, said actuator outputting a force on said touch input device to provide a haptic sensation to said user contacting said touch surface, wherein said actuator outputs said force based on a single-discontinuity waveform.

2. The haptic feedback touch control of claim 1, wherein the single-discontinuity waveform is associated with one of a button press or button release.

3. The haptic feedback touch control of claim 2, further comprising moving the touch screen in accordance with a second single-continuity waveform associated with the other of the button press or button release.

4. The control of claim 3, wherein the first second single-continuity waveforms are different from one another.

5. The control of claim 3, wherein the first second single-continuity waveforms are substantially identical to one another.

6. The haptic feedback touch control of claim 1, wherein the single-discontinuity waveform is symmetrical.

7. The haptic feedback touch control of claim 1, wherein the single-discontinuity waveform is asymmetrical.

8. The haptic feedback touch control of claim 1, wherein the touch surface is a touchscreen.

9. The haptic feedback touch control of claim 1, wherein the touch surface is a touchpad.

10. The haptic feedback touch control of claim 1, wherein said contact is effected by a body portion of an operator.

11. The haptic feedback touch control of claim 1, wherein said contact is effected by a stylus manipulated by an operator.

12. The haptic feedback touch control of claim 1, wherein the actuator comprises:

a first structural element having mounting structure mountable to a first component;

a second structural element having mounting structure mountable to a second component;

a first biasing element coupling the first structural element to the second structural element;

a first magnetic device carried by the first structural element, the first magnetic device including a first pole piece; and

a second magnetic device carried by the second structural element, the second magnetic device including a second pole piece;

a first coil disposed about at least one of said first pole piece and said second pole piece;

wherein the first biasing element is arranged to provide a biasing force opposing an attractive magnetic force urging the first and second pole pieces together when current is applied to the first coil and electric current applied to the first coil causes a haptic effect to be generated between the first component on the second component.

13. The haptic feedback touch control of claim 12, wherein the second magnetic device includes a second coil disposed about at least one of said first pole piece and said second pole piece.

14. The haptic feedback touch control of claim 12, further comprising a second biasing element, wherein the second biasing element is arranged to provide a biasing force opposing an attractive magnetic force urging the first and second pole pieces together when current is applied to the first coil.

15. The haptic feedback touch control of claim 12, wherein the first biasing element comprises a spring.

16. The haptic feedback touch control of claim 12, wherein the first biasing element comprises an elastomeric element.

17. The haptic feedback touch control of claim 12, wherein the first biasing element comprises a foam material.

18. The haptic feedback touch control of claim 12, wherein the first and second structural element and the first biasing element are all formed from the same material and the first biasing element is formed thinner than the first and second structural elements so that it is free to flex when perturbed.

19. A haptic feedback touch control for inputting signals to a computer and for outputting forces to a user of the touch control, the touch control comprising:

a touch input device including a touch surface operative to input a position signal to a processor of said computer based on a location on said touch surface which said user contacts, said location being associated with a location of a cursor displayed on a display screen upon which a graphical object is also displayed; and

at least one actuator coupled to said touch input device, said actuator outputting a force on said touch input device to provide a haptic sensation to said user contacting said touch surface, wherein said actuator outputs said force as long as the location of the cursor on the display screen assumes a predetermined relationship with the location of the graphical object on the touch screen.

20. The haptic feedback touch control of claim 19, wherein the predetermined relationship is coincidence of location.

21. The haptic feedback touch control of claim 19, wherein the actuator comprises:

a first structural element having mounting structure mountable to a first component;

a second structural element having mounting structure mountable to a second component;

a first biasing element coupling the first structural element to the second structural element;

a first magnetic device carried by the first structural element, the first magnetic device including a first pole piece; and

a second magnetic device carried by the second structural element, the second magnetic device including a second pole piece;

a first coil disposed about at least one of said first pole piece and said second pole piece;

wherein the first biasing element is arranged to provide a biasing force opposing an attractive magnetic force urging the first and second pole pieces together when current is applied to the first coil and electric current applied to the first coil causes a haptic effect to be generated between the first component on the second component.

22. The haptic feedback touch control of claim 21, wherein the second magnetic device includes a second coil disposed about at least one of said first pole piece and said second pole piece.

23. The haptic feedback touch control of claim 21, further comprising a second biasing element, wherein the second biasing element is arranged to provide a biasing force opposing an attractive magnetic force urging the first and second pole pieces together when current is applied to the first coil.

24. The haptic feedback touch control of claim 21, wherein the first biasing element comprises a spring.

25. The haptic feedback touch control of claim 21, wherein the first biasing element comprises an elastomeric element.

26. The haptic feedback touch control of claim 21, wherein the first biasing element comprises a foam material.

27. The haptic feedback touch control of claim 21, wherein the first and second structural element and the first biasing element are all formed from the same material and the first biasing element is formed thinner than the first and second structural elements so that it is free to flex when perturbed.

28. A haptic feedback touch control for inputting signals to a computer and for outputting forces to a user of the touch control, the touch control comprising:

a touch input device including a touch surface operative to input a position signal to a processor of said computer based on a location on said touch surface which said user contacts, said location being associated with a location of a cursor displayed on a display screen upon which a graphical object is also displayed; and

at least one actuator coupled to said touch input device, said actuator outputting a force on said touch input device to provide a haptic sensation to said user contacting said touch surface, wherein said actuator outputs said force based on an extent to which an action is triggered by a relative location of the cursor and the graphical object.

29. The haptic feedback touch control of claim 28, wherein the action is scrolling.

30. The haptic feedback touch control of claim 28, wherein the haptic feedback is based on a repetitive waveform whose frequency increases corresponding to the extent of the action.

31. A device for simulating a button press using haptic feedback imparted through a touch surface, comprising:

means for sensing a contact with said touch surface; and

means for moving the touch screen responsive to said contact in accordance with a first single-discontinuity waveform.

32. A device for providing haptic feedback representative of the relative location of a cursor and a graphical object displayed on a display screen, comprising:

means for associating the location of the cursor in the display screen with a contact location on a touch screen; and

means for providing haptic feedback by way of the touch screen as long as the location of the cursor on the display screen assumes a predetermined relationship with the location of the graphical object on the touch screen.

33. A device for providing haptic feedback representative of the extent to which an action triggered by manipulation of a cursor relative to a graphical object displayed on a display screen is occurring comprising:

means for associating the location of the cursor in the display screen with a contact location on a touch screen; and

means for providing haptic feedback by way of the touch screen, said haptic feedback having an extent corresponding to the extent of the action.

34. A device for providing haptic feedback in response to a manipulation of a graphical object, comprising:

means for correlating a characteristic of the manipulation of the graphical object with a characteristic of a contact of a touch screen; and

means for imparting a force to the touch screen at an extent which varies in accordance with the characteristic of the manipulation.

35. A haptic feedback touch control for inputting signals to a computer and for outputting forces to a user of the touch control, the input signals manipulating a graphical object, the touch control comprising:

a touch input device including a touch surface operative to input a position signal to a processor of said computer based on a location on said touch surface which said user contacts; and

at least one actuator coupled to said touch input device, said actuator outputting a force on said touch input device to provide a haptic sensation to said user contacting said touch surface, said force being a function of a characteristic of the manipulation of a graphical object, which is a function of a characteristic of the contact by said user.

36. The haptic feedback touch control of claim 35, wherein the characteristic of the manipulation is one or more of speed, acceleration, or deceleration.

37. The haptic feedback touch control of claim 36, wherein the force is repetitive and increases in frequency and/or magnitude with said one or more of speed, acceleration or deceleration.

38. The haptic feedback touch control of claim 35, wherein the force is repetitive and increases in frequency and/or magnitude based on the characteristic of the manipulation.

39. The haptic feedback touch control of claim 35, wherein the graphical object assumes multiple forms, and the characteristic of said manipulation is the rate at which said forms are assumed.

40. The haptic feedback touch control of claim 39, wherein the force is repetitive and increases in frequency and/or magnitude based on said rate.

41. The haptic feedback touch control of claim 35, wherein said graphical object is a scroll bar.

42. The haptic feedback touch control of claim 35, wherein said characteristic of a contact is the location of the contact.

43. The haptic feedback touch control of claim 35, wherein said characteristic of a contact is pressure imparted by the contact.

44. The haptic feedback touch control of claim 35, wherein said characteristic of a contact is a rate of change of contact position.

45. The haptic feedback touch control of claim 35, wherein said characteristic of a contact is a rate of change of contact speed.

46. The haptic feedback touch control of claim 35, wherein said characteristic of a contact is a rate of change of contact location.

47. The haptic feedback touch control of claim 35, wherein the actuator comprises:

a first structural element having mounting structure mountable to a first component;

a second structural element having mounting structure mountable to a second component;

a first biasing element coupling the first structural element to the second structural element;

a first magnetic device carried by the first structural element, the first magnetic device including a first pole piece; and

a second magnetic device carried by the second structural element, the second magnetic device including a second pole piece;

a first coil disposed about at least one of said first pole piece and said second pole piece;

wherein the first biasing element is arranged to provide a biasing force opposing an attractive magnetic force urging the first and second pole pieces together when current is applied to the first coil and electric current applied to the first coil causes a haptic effect to be generated between the first component on the second component.

48. The haptic feedback touch control of claim 47, wherein the second magnetic device includes a second coil disposed about at least one of said first pole piece and said second pole piece.

49. The haptic feedback touch control of claim 47, further comprising a second biasing element, wherein the second biasing element is arranged to provide a biasing force opposing an attractive magnetic force urging the first and second pole pieces together when current is applied to the first coil.

50. The haptic feedback touch control of claim 47, wherein the first biasing element comprises a spring.

51. The haptic feedback touch control of claim 47, wherein the first biasing element comprises an elastomeric element.

52. The haptic feedback touch control of claim 47, wherein the first biasing element comprises a foam material.

53. The haptic feedback touch control of claim 47, wherein the first and second structural element and the first biasing element are all formed from the same material and the first biasing element is formed thinner than the first and second structural elements so that it is free to flex when perturbed.

* * * * *