Trials@uspto.gov
571-272-7822

Paper 10
Entered: October 15, 2024

UNITED STATES PATENT AND TRADEMARK OFFICE

BEFORE THE PATENT TRIAL AND APPEAL BOARD

APPLE INC.,
Petitioner,

v.

RESONANT SYSTEMS, INC.,
Patent Owner.

IPR2024-00807
Patent 8,860,337 B2

Before KARL D. EASTHOM, NORMAN H. BEAMER, and BRIAN D. RANGE, *Administrative Patent Judges*.

EASTHOM, *Administrative Patent Judge*.

DECISION
Granting Institution of *Inter Partes* Review
35 U.S.C. § 314

I. INTRODUCTION

Apple Inc., Petitioner, filed a Petition (Paper 3, "Pet.") requesting an *inter partes* review of claims 1–4 of U.S. Patent No. 8,860,337 B2 (Ex. 1001, the "'337 patent"). Pet. 1. Resonant Systems, Inc., Patent Owner, filed a Preliminary Response (Paper 6, "Prelim. Resp."). Prior to filing its Preliminary Response, Patent Owner filed an Exhibit evidencing that it filed a disclaimer under 37 C.F.R. 1.321(a) statutorily disclaiming claims 1, 4, and 5. Ex. 2008. With the Board's authorization, Petitioner filed a Preliminary Reply and Patent Owner a Preliminary Sur-Reply directed to claim construction issues. *See* Paper 8 ("Reply"); Paper 9 ("Sur-Reply").

The standard for instituting an *inter partes* review is set forth in 35 U.S.C. § 314(a), which provides that an *inter partes* review may not be instituted unless the information presented in the Petition and any preliminary response shows that "there is a reasonable likelihood that the petitioner would prevail with respect to at least 1 of the claims challenged in the petition."

For the reasons explained below, we determine that Petitioner has established a reasonable likelihood that it would prevail with respect to at least one challenged claim. Accordingly, we institute an *inter partes* review as to all remaining challenged claims, claims 2 and 3, and the grounds raised in the Petition.

II. BACKGROUND

A. Real Parties in Interest

Each party identifies itself as the real parties in interest. Pet. 82; Paper 4, 1.

NINTENDO-1051, p. 2
Nintendo v. Resonant
IPR2025-00680

B. Related Matters

The parties identify the following district three court proceedings as related matters: *Resonant Systems, Inc. d/b/a Revel HMI v. Apple, Inc.*, No. 7:23-cv-00077 (W.D. Tex.) (the "Apple Litigation"); *Resonant Systems, Inc. v. Samsung Electronics Co., Ltd.*, No. 2:22-cv-00423 (E.D. Tex.); *Resonant Systems, Inc. v. Sony Group Corp.*, No. 2:22-cv-00424 (E.D. Tex.). Pet. 82; Paper 4.

The parties identify the following PTAB proceeding that also involves the '337 patent: *Sony Interactive Entertainment Inc. and Sony Group Corp. v. Resonant Systems, Inc.*, Paper 9, IPR2024-00569 (PTAB Aug. 26, 2024) (denying institution). *See* Pet. 86; Paper 5.

Other PTAB proceedings challenging related patents that may involve similar claim construction issues include the following: IPR2023-00992, IPR2023-00993, IPR2023-01025, IPR2024-00568, IPR2024-00569, IPR2024-00697, IPR2024-00698, IPR2024-00806, IPR2024-00808, and IPR2024-00983.

C. The '337 Patent

The '337 patent relates to "vibration-generating devices and, in particular, to vibration modules that can be incorporated into a wide variety of different types of electromechanical devices and systems to produce vibrations of selected amplitudes and frequencies over a wide range of amplitude/frequency space." Ex. 1001, 1:14–19. The vibration generating devices include linear vibration modules (LVMs) and linear-resonant vibration modules (LRVMs). *Id.* at 4:13–19, code (57). LVMs and LRVMs "are linear in the sense that the vibrational forces are produced by a linear

NINTENDO-1051, p. 3
Nintendo v. Resonant
IPR2025-00680

oscillation of a weight or component within the LVM or LRVM." *Id.* at 4:19–21.

Figure 4A follows:

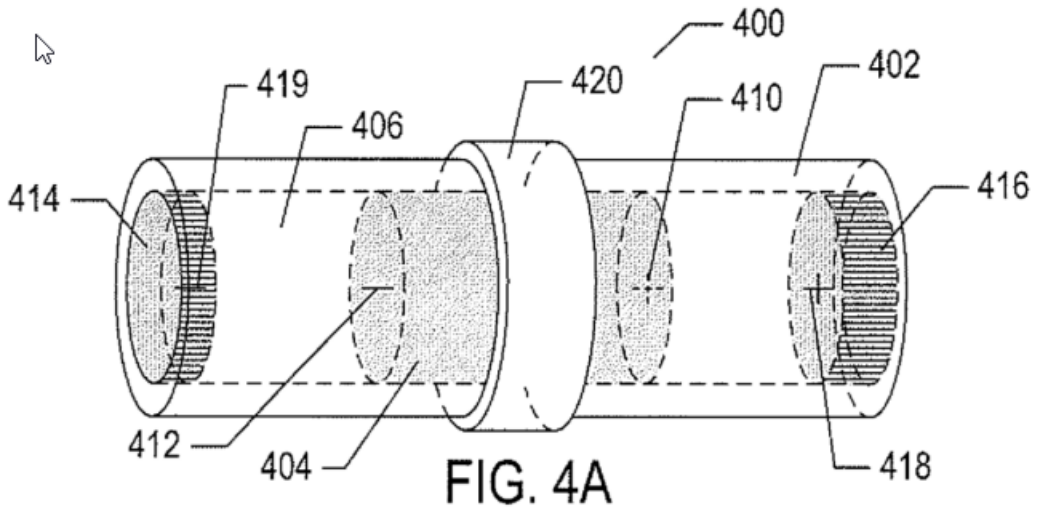

FIG. 4A

Figure 4A depicts LVRM 400, which includes cylindrical housing or tube 402 forming cylindrical chamber 406, disk-like magnets 414 (left) and 416 (right) with negative and positive polarity, respectively, and conductive coil 420 encircling tube 402. Ex. 1001, 4:44–5:4, Fig. 4A.

Disk-like magnets 414 and 416 repel magnet 404 when it moves to the extreme right or left according to a current supplied to coil 420 from a power source. Ex. 1001, 4:59–5:7. This current oscillates with an amplitude and frequency to create a changing magnetic field via coil 420, which in turn causes magnet 404 to change its direction and length of travel according to a user-specified amplitude and frequency of movement. *See id.* at 4:59–5:4, 6:13–39, Figs. 4B–4G.

Figure 6, a block diagram of the LRVM, follows:

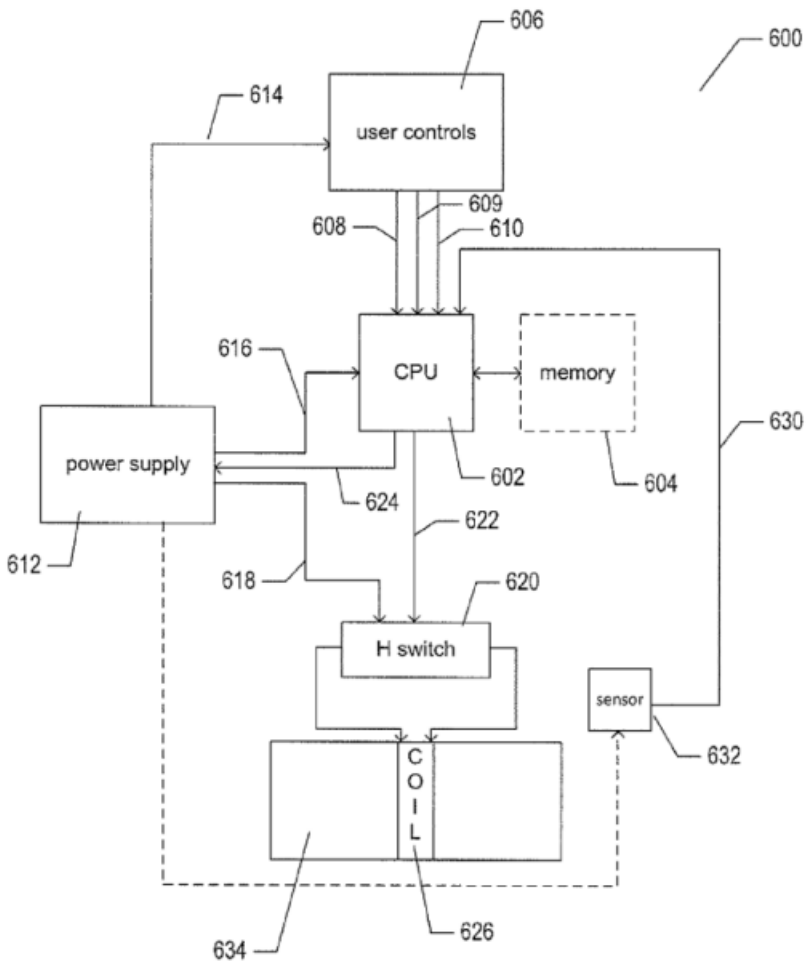

FIG. 6

Figure 6 illustrates LRVM 600, which includes the following: microprocessor (CPU) 602 executing a control program; memory chip 604 storing the control program; user controls 606 that may include "any of various dials, pushbuttons, switches, or other electromechanical-control devices," such as "a dial to select a strength of vibration, which corresponds to the current applied to the coil," "a switch to select one of various different operational modes," and "a power button"; power supply 612; coil 626; magnet 634; H-bridge switch 620 that "receives a control-signal input" from

microprocessor (CPU) 602, which together control the direction and frequency of current supplied to coil 626. *See* Ex. 1001, 6:19–61, Fig. 6.

The H-bridge switch "change[s] the direction of current applied to the coil that drives linear oscillation within" the LRVM. Ex. 1001, 5:47–49; *see also id.* at Figs. 5A–5B. The H-bridge switch "is but one example of various different types of electrical and electromechanical switches that can be used to rapidly alternate the direction of current within the coil of an LRVM." *Id.* at 5:62–65.

D. Illustrative Claim

Independent claim 2 is illustrative of the challenged claims, and follows:

> 2. [2pre] A linear vibration module comprising:
>
> [2a] a housing;
>
> [2b] a moveable component;
>
> [2c] a power supply;
>
> [2d] user-input features;
>
> [2e] a driving component that drives the moveable component in each of two opposite directions within the housing; and
>
> [2f] a control component that controls supply of power from the power supply to the driving component to cause the moveable component to oscillate at a frequency and an amplitude specified by user input received from the user-input features,
>
> [2g] wherein the control component drives simultaneous oscillation of the moveable component at two or more frequencies to generate complex vibration modes.

Pet. vii–viii (alteration in original).

NINTENDO-1051, p. 6
Nintendo v. Resonant
IPR2025-00680

E. Asserted Grounds of Unpatentability

Petitioner contends that claims 2 and 3 are unpatentable as follows:[1]

Claim(s) Challenged	35 U.S.C. §	Reference(s)/Basis
2, 3	103(a)	Wakuda,[2] Ramsay,[3]
2, 3	103(a)	Wakuda, Ramsay, Rossi,[4] Aldrich[5]
2	103(a)	Gregorio,[6] Ramsay, Wakuda
2, 3	103(a)	Gregorio, Ramsay, Tierling[7]
2	103(a)	Gregorio, Ramsay, Wakuda, Rossi, Aldrich
2, 3	103(a)	Gregorio, Ramsay, Tierling, Rossi, Aldrich

Pet. 1. The Petition designates the six grounds listed above as Grounds 1, 2, 3A, 3B, 4A, and 4B, respectively. Pet. 7, 31, 50, 66, 75, 80. Petitioner supports its Petition with a Declaration of Dr. Blake Hannaford. Ex. 1003.

---

[1] The Leahy-Smith America Invents Act, Pub. L. No. 112-29, 125 Stat. 284 (2011) ("AIA"), amended 35 U.S.C. §§ 102, 103 effective March 16, 2013, which is after the '337 patent's effective filing date. *See* Ex. 1001, code (63). Therefore, the pre-AIA version of § 103 applies.

[2] Wakuda et al., US 7,005,811 B2, issued Feb. 28, 2006. Ex. 1005.

[3] Ramsay et al., US 2008/0294984 A1, published Nov. 27, 2008. Ex. 1006.

[4] Rossi et al., US 4,879,641, issued Nov. 7, 1989. Ex. 1020.

[5] Aldrich et al, *Controller for Driving a Piezoelectric Actuator at Resonance*, NASA Tech Briefs, April 2008. Ex. 1021.

[6] Gregorio et al., US 7,843,277 B2, issued Nov. 30, 2010. Ex. 1004.

[7] Tierling et al., US 2005/0134561 A1, published June 23, 2005. Ex. 1008.

NINTENDO-1051, p. 7
Nintendo v. Resonant
IPR2025-00680

III. DISCRETIONARY DENIAL UNDER 35 U.S.C. § 314(a)

Patent Owner contends that the Board should exercise discretion to deny institution under 35 U.S.C. § 314(a) in light of the Apple Litigation. Prelim. Resp. 22–31. Patent Owner contends that the factors identified in *Apple Inc. v. Fintiv, Inc.*, IPR2020-00019, Paper 11 (PTAB Mar. 20, 2020) (precedential) ("*Fintiv*"), weigh in favor of exercising discretion to deny institution. *Id.*

On June 21, 2022, the Director of the U.S. Patent and Trademark Office ("USPTO") issued a Memorandum titled "Interim Procedure for Discretionary Denials in AIA Post-Grant Proceedings With Parallel District Court Litigation" ("Memorandum"),[8] which states, among other things, that "the PTAB will not discretionarily deny institution in view of parallel district court litigation where a petitioner presents a stipulation not to pursue in a parallel proceeding the same grounds or any grounds that could have reasonably been raised before the PTAB." Memorandum 3 (citing *Sotera Wireless, Inc. v. Masimo Corp.*, IPR2020-01019, Paper 12 (PTAB Dec. 1, 2020) (precedential as to § II.A)).

In a September 18, 2024 letter, Petitioner states that "Apple hereby stipulates that if the PTAB authorizes petitioner to enter this stipulation into evidence in IPR2024-00807 and institutes the proceeding, Apple will not pursue in the above-captioned litigation the same invalidity grounds raised (or any grounds that could have been raised) in IPR2024-00807 for any claim of the patent." Ex. 1048 (citing *Sotera*, IPR2020-01019, Paper 12).

---

[8] The Memorandum is *available at* https://www.uspto.gov/sites/default/files/documents/interim_proc_discretionary_denials_aia_parallel_district_court_litigation_memo_20220621_.pdf.

NINTENDO-1051, p. 8
Nintendo v. Resonant
IPR2025-00680

Applying the guidance provided in the Memorandum, we decline to exercise our discretion to deny institution in this proceeding under *Fintiv* because Petitioner submitted a *Sotera* stipulation.

IV. ANALYSIS OF PETITIONER'S CHALLENGES

A. The Obviousness Standard

> Section 103(a) forbids issuance of a patent when "the differences between the subject matter sought to be patented and the prior art are such that the subject matter as a whole would have been obvious at the time the invention was made to a person having ordinary skill in the art to which said subject matter pertains."

KSR Int'l Co. v. Teleflex Inc., 550 U.S. 398, 406 (2007) (quoting 35 U.S.C. § 103(a)). The obviousness question involves resolving underlying factual determinations including (1) the scope and content of the prior art; (2) any differences between the claimed subject matter and the prior art; (3) the level of ordinary skill in the art; and when presented (not so here), (4) objective evidence of non-obviousness. *Graham v. John Deere Co.*, 383 U.S. 1, 17–18 (1966).

B. Level of Ordinary Skill in the Art

Determining whether an invention would have been obvious under 35 U.S.C. § 103 requires resolving the level of ordinary skill in the pertinent art at the time of the effective filing date of the claimed invention. *Graham*, 383 U.S. at 17. The person of ordinary skill in the art is a hypothetical person who knows the relevant art. *In re GPAC Inc.*, 57 F.3d 1573, 1579 (Fed. Cir. 1995). Factors in determining the level of ordinary skill in the art include the types of problems encountered in the art, the sophistication of the technology, and educational level of active workers in the field. *Id.* One or more factors may predominate. *Id.*

NINTENDO-1051, p. 9
Nintendo v. Resonant
IPR2025-00680

Petitioner's expert declarant contends that a person of ordinary skill in the art (POSITA),

> would have had a degree in mechanical engineering, electrical engineering, physics, or a related technical field, and at least 2–3 years of experience related to the design or development of systems incorporating linear actuators; additional years of experience could substitute for the advanced-level degree.

Ex. 1003 ¶ 30. Patent Owner offers "a similar level of ordinary skill in the art." Prelim. Resp. 4.

Based on a review of the record, we adopt Petitioner's proposed level of ordinary skill in the art because it is consistent with the evidence of record, including the asserted prior art and '337 patent specification.

C. Claim Construction

In *inter partes* reviews, the Board interprets claim language using the district-court-type standard, as described in *Phillips v. AWH Corp.*, 415 F.3d 1303 (Fed. Cir. 2005) (en banc). *See* 37 C.F.R. § 42.100(b) (2023). Under this standard, claim terms have their ordinary and customary meaning, as would be understood by a person of ordinary skill in the art at the time of the invention, in light of the language of the claims, the specification, and the prosecution history. *See Phillips*, 415 F.3d at 1313–14.

For purposes of this proceeding, the parties agree that independent claim 2 includes means-plus-function limitations under 35 U.S.C. § 112 ¶ 6.[9] Pet. 2–6; Prelim. Resp. 7–14.

> An element in a claim for a combination may be expressed as a means . . . for performing a specified function without the

[9] As indicated above, statutory citations are to the pre-AIA version of 35 U.S.C. § 112. *See supra* note 1.

> recital of structure, material, or acts in support thereof, and such claim shall be construed to cover the corresponding structure, material, or acts described in the specification and equivalents thereof.

35 U.S.C. § 112 ¶ 6. In particular, the parties agree that the "driving component" and "control component" requirements of independent claim 2 are means-plus-function limitations. Pet. 2–6; Prelim. Resp. 7–14. Construing a means-plus-function limitation under 35 U.S.C. § 112 ¶ 6 involves two steps: 1) identifying the claimed function and 2) identifying in the specification the corresponding structure that performs the claimed function. *Med. Instrumentation & Diagnostics Corp. v. Elekta AB*, 344 F.3d 1205, 1210 (Fed. Cir. 2003); *Cardiac Pacemakers, Inc. v. St. Jude Med., Inc.*, 296 F.3d 1106, 1119 (Fed. Cir. 2002).

"[S]tructure disclosed in the specification" is "'corresponding' structure," "only if the specification or prosecution history *clearly links or associates* that structure to the function recited in the claim." *B. Braun Med. Inc., v. Abbott Lab's*, 124 F.3d 1419, 1424 (Fed. Cir. 1997) (emphasis added) ("Because Braun's specification does not adequately disclose the valve seat as structure that holds the disc firmly in place, Braun has failed to particularly point out and distinctly claim that particular means."). "This duty to link or associate structure to function is the *quid pro quo* for the convenience of employing § 112, ¶ 6." *Id.* (citing *O.I. Corp. v. Tekmar Co.*, 115 F.3d 1576, 1583 (Fed. Cir. 1997)).

Our reviewing court explains:

> If the specification is not clear as to the structure that the patentee intends to correspond to the claimed function, then the patentee has not paid that price but is *rather attempting to claim in functional terms unbounded by any reference to structure* in the specification. Such is impermissible under the statute.

NINTENDO-1051, p. 11
Nintendo v. Resonant
IPR2025-00680

Med. Instrumentation & Diagnostics Corp. v. Elekta AB, 344 F.3d 1205, 1211 (Fed. Cir. 2003) (emphasis added); *see also Medtronic, Inc. v. Advanced Cardiovascular Sys., Inc.*, 248 F.3d 1303, 1313 (Fed. Cir. 2001) (finding particular structures not to be corresponding structures because "one skilled in the art would not perceive any clear link or association between these structures and the [recited] function of connecting adjacent elements together").

1. Construction of "Driving Component"

Petitioner contends the claimed function of "driving component is "drives the moveable component to oscillate within the housing." Pet. 5; Ex. 2002, 2. Petitioner asserts that the corresponding structure is

> a coil of conductive wire 420" (Figures 4A–4G); "coil 514" (Figures 5A–5B); "coil 626" (Figure 6); "electromagnet" (Figures 10-11); "additional coils 1202 and 1204" (Figure 12); "coils 1302 and 1304" (Figure 13); "driving coils 1412 and 1414" (Figure 14); "coil 1510" (Figures 15–17); "stator coils" (Figures 24A-25).

Pet. 5–6 (citing Ex. 1001, 5:2–34, 5:54–59, 6:32–35, 9:11–52, 9:64–10:22, 14:59); Ex. 2002, 2.)[10] This construction is in accord with our reading of the '337 patent and we adopt it for purposes of this Decision.

2. Construction of "Control Component"

The parties agree that the claimed function of the control component is, "controls supply of power from the power supply to the driving

[10] Patent Owner states in its Preliminary Response that it "does not believe that the phrase involving a 'driving component' needs to be construed in order to decide whether to institute this IPR." Prelim. Resp. 7. However, Patent Owner agreed to the above construction in the Apple Litigation, and the court adopted the construction. Ex. 2002, 2.

NINTENDO-1051, p. 12
Nintendo v. Resonant
IPR2025-00680

component to cause the moveable component to oscillate at a frequency and an amplitude specified by user input received from the user-input features." Pet. 3–4; Ex. 2002, 6.

Petitioner proposes that the corresponding structure is "one of the switches shown in Figures 5A-6 and described at 5:45–65, 6:2–8, and the processor (also referred to as microprocessor, microcontroller, or CPU) that performs the algorithm shown in Figures 7A–7C and described at 6:43–8:30 and 13:3–41." Pet. 4; Reply 2. Patent Owner does not specifically mention the claimed function but generally proposes, under one alternative, the same construction that the district court adopted in the Apple Litigation:

> **Function**: controlling supply of power from the power supply to the driving component to cause the moveable component to oscillate at a frequency and an amplitude specified by specified by one or more stored values.
>
> **Structure**: a microcontroller, a processor, a microprocessor, or a CPU that performs the algorithm shown in Steps 706 through 716 in Figure 7A, with reference to the steps shown in Figures 7B and 7C, or the algorithm described in the corresponding text, See, e.g. 7:10–7:24, 7:32–8:30 and/or equivalents thereof.

Prelim. Resp. 8 (citing Ex. 2002, 5); *see also* Ex. 3001, 33–37 (August 23, 2024 "Claim Construction Memorandum And Order" recently entered in the Apple Litigation). As elaborated below, our reading of the '337 patent is in accord with the district court's construction, and we adopt it for purposes of this Decision.[11]

---

[11] The district court's construction is in accord with Federal Circuit authority consistently requiring that the corresponding structure, in circumstances such as presented here, be more than simply a general purpose computer or microprocessor and that the specification must disclose an algorithm for performing the claimed function. *See, e.g.*, *Noah Systems Inc. v. Intuit Inc.*,

NINTENDO-1051, p. 13
Nintendo v. Resonant
IPR2025-00680

a) Frequency Function

In particular, first considering the user-specified *frequency* function of the control component limitation: "controls supply of power from the power supply to the driving component to cause the moveable component to oscillate at a *frequency* . . . specified by one or more stored values," the specification clearly links this recited function at least to algorithmic structure corresponding to steps 706 and 708 of Figure 7A. As the block diagram of Figure 6 shows and as explained in Section II.C above, "power supply 612 receives a control input 624 from the CPU to control the current supplied to the H-bridge switch 618 for transfer to the coil 626," which controls the frequency. *See* Ex. 1001, 6:33–35. The relevant portion of Figure 7A follows:

675 F.3d 1302, 1312 (Fed. Cir. 2012); *Aristocrat Techs. Australia PTY Ltd. v. Int'l Game Tech.*, 521 F.3d 1328, 1333 (Fed. Cir. 2008).

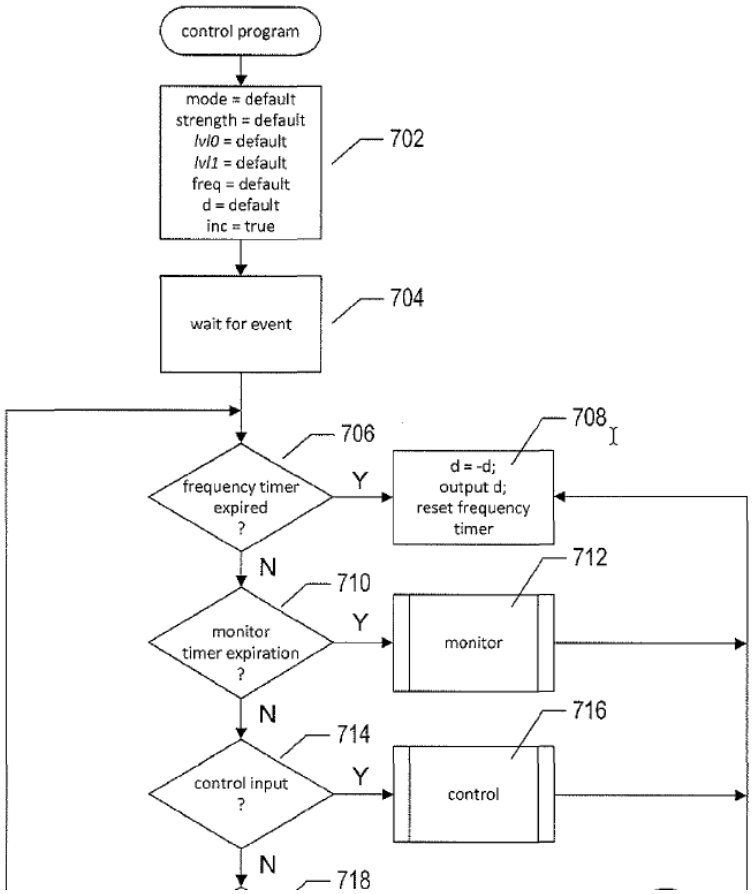

Figure 7A, which corresponds to a "high-level control program" executed by CPU 602 and memory 604 of Figure 6 (*supra* Section II.C), shows the algorithm using value d, "the control output to the H-bridge switch," to control the frequency. *See* Ex. 1001, 6:32–7:31. In steps 706 and 708, the algorithm operates a timer to periodically flip the polarity of the d value applied to the H-bridge switch, which Figure 5A illustrates. *See id.*

Figure 5A, which depicts an H-bridge switch and control output d from step 708 of Figure 7A (also referred to as "directional signal d 502," Ex. 1001, 5:52–53), follows:

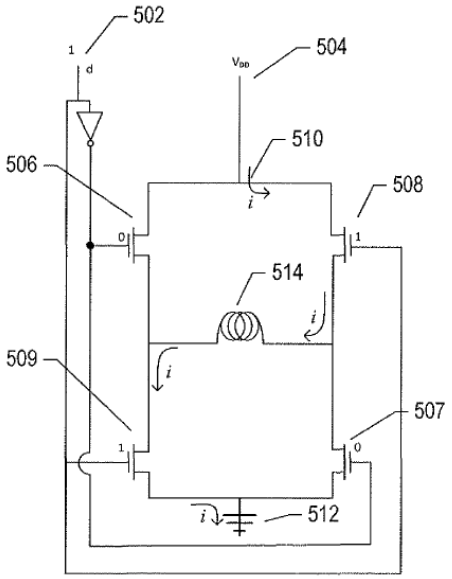

FIG. 5A

Figure 5A "illustrate[s] an H-bridge switch that can be used, in various embodiments of the current application, *to change the direction of current applied to the coil that drives linear oscillation*." Ex. 1001, 3:35–39 (emphasis added). In other words, by controlling the polarity of directional signal d 502, the CPU changes the direction of current *i* through coil 514 from power supply 504 as Figure 5A above indicates, thereby changing the frequency depending on the timer. Specifically, the current *i* oscillates alternately through switches 508 and 509 (right to left through coil 514 as depicted) and switches 506 and 507 (left to right through coil 514) depending on whether the value of input d is "high" or "low" (which the timer controls). *See id.* at 5:43–65.

To implement this user-defined oscillation frequency, Figure 7A describes a "timer[]" to "control[] the change in direction of the current applied to the coil, at a currently established frequency." Ex. 1001, 7:3–5. After the frequency timer expires, "as determined in step 706, *the*

value of the output signal d is flipped [i.e., from low to high, or vice versa], in step 708, and output to the H-bridge switch, with the frequency timer being reset to trigger a next frequency-related event." *Id.* at 7:14–17 (emphasis added). "The frequency-timer interval is determined by the current value of the variable freq." *Id.* at 7:17–18.[12]

Therefore, the specification clearly links the function of "control[ing] supply of power from the power supply to . . . cause the moveable component to oscillate at a *frequency* . . . specified by one or more stored values" at least to portions of steps 706 and 708 of the flow diagram algorithm of Figure 7A, as described above. Thus, the control component requires a microprocessor and memory with algorithmic structure including a timing algorithm or similar coding for creating a control output signal that flips to control the direction of current flow through a coil (e.g., coil 514, Fig. 5, coil 626, Fig. 6), where the coil is structure that corresponds to the recited "driving component," as noted above.[13]

---

[12] For purposes of this Decision, we adopt the District Court's conclusion that the "control component" structure does not require an H-bridge switch or computing initial default values as specified in step 702 of Figure 7A (i.e., values not specified by a user). Ex. 3001, 30–33, 35. *See Golight, Inc. v. Wal-Mart Stores, Inc.*, 355 F.3d 1327, 1334 (Fed. Cir. 2004) ("[T]o the extent the [disclosed] assembly contains particular structures for permitting rotation through 360°, such as the follower pin 64 and slot 65, these structures are superfluous to our claim construction analysis because they are not required for performing the claimed function," which does not require 360° rotation.).

[13] "Rather than using a formal timer mechanism, certain implementations may simply employ counted loops or other simple programming techniques for periodically carrying out tasks." Ex. 1001, 7:7–10.

NINTENDO-1051, p. 17
Nintendo v. Resonant
IPR2025-00680

b) Amplitude Function

Next considering the user-specified *amplitude* function of the control component limitation: "control supply of power from the power supply to the driving component to cause the moveable component to oscillate at . . . an *amplitude* specified by one or more stored values," the specification clearly links this recited function to the flow-control diagram of Figure 7C and its description. Ex. 1001, 8:10–22, Fig. 7C.

Figure 7C follows:

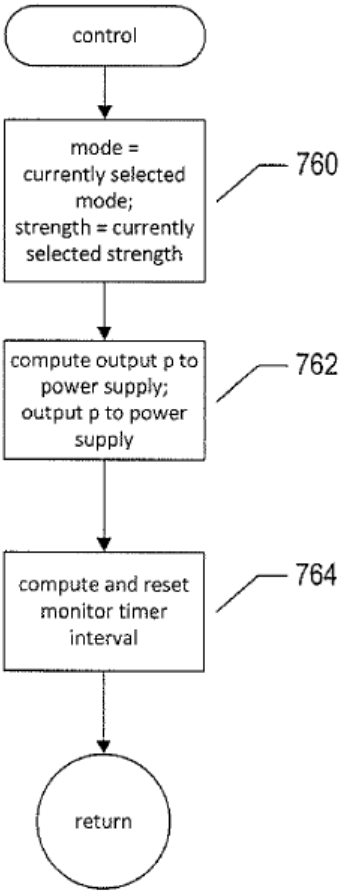

FIG. 7C

Figure 7C represents "a control-flow diagram for the routine 'control,' called in step 716 in FIG. 7A." Ex. 1001, 8:10–11. The specification discloses that in step 762, "the routine 'control' computes an output value p corresponding to the currently selected strength, stored in the variable strength, *and outputs the value p to the power supply so that the power supply outputs an appropriate current to the coil*." Ex. 1001, 8:16–20. Step 762 corresponds to, for example, control input 624 transmitted from CPU 602 to power supply 612 of Figure 6 to control the current from power

supply 612 to coil 626. *See supra* Section II.C (describing Fig. 6); Ex. 1001, 6:33–35 ("The power supply 612 receives a control input 624 from the CPU to control the current supplied to the H-bridge switch 618 for transfer to the coil 626.").

The specification thus clearly links step 760, which selects current strength and mode, and step 762, which corresponds to control input 624 transmitted from CPU 602 to power supply 612 in the block diagram of Figure 6, to the recited function, "control supply of power from the power supply to the driving component to cause the moveable component to oscillate at . . . an amplitude specified by one or more stored values." Ex. 1001, 8:10–22, Fig. 7C.

c) Control Component Summary

In summary, the corresponding structure of the "control component" under a means-plus-function interpretation that relies upon a microprocessor (and memory) as corresponding structure further requires algorithmic structure at least for 1) operating a timer or its equivalent to flip the polarity of a control value periodically corresponding to a user-selected frequency and input the control value to an H-bridge switch circuit to change the direction of the current through the coil as supplied by the power supply, and 2) computing an output value corresponding to a user-selected amplitude of oscillation and outputting the value to the claimed power supply so that the power supply outputs an appropriate current amplitude to a coil.

D. Ground 1, Alleged Obviousness of Claims 2 and 3 over Wakuda and Ramsay

Petitioner contends that claims 2 and 3 would have been obvious over the combined teachings of Wakuda and Ramsay. Pet. 7–30.

1. Wakuda

Wakuda discloses "a vibration generator system, which can generate vibrations at a frequency that can be bodily sensed by humans." Ex. 1005, 2:13–17. Figure 1A of Wakuda follows:

FIG. 1A

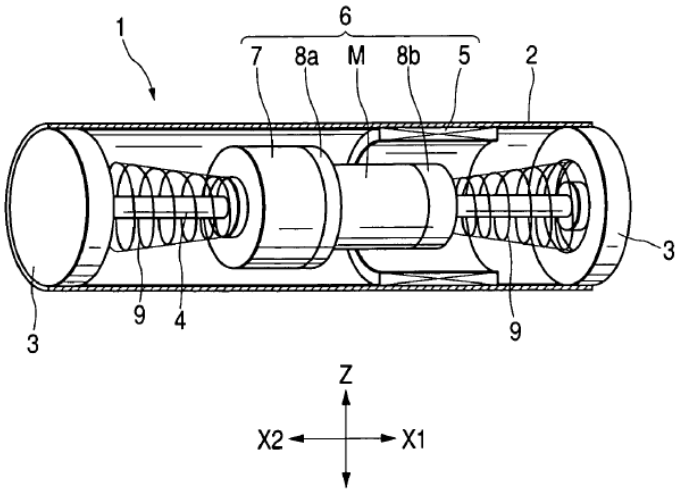

Figure 1A depicts vibration generator means 1 including cylindrical-shaped casing 2, covers 3, coil 5, movable body 6 including weight 7 and magnet M, and cone coil springs 9. Ex. 1005, 4:30–5:24.

2. Ramsay

Ramsay provides techniques for "enabling a regular user of an end user device, such as a cellular telephone, to customize parameters associated with haptic effects applied to the user by the end user device." Ex. 1006, code (57). Users can access software to modify "a frequency of vibration and amplitude of vibration" using a "GUI". *Id.* ¶ 30; *see also id.* Fig. 4 (GUI), ¶¶ 30–35 ("It may be desirable for the user to vary the amplitude over time.") The amplitude can be changed gradually or in steps during a portion of or during the entirety of the haptic track, 46, 53. Ramsay explains that "haptic feedback can be used to supplement auditory and visual

feedback to enhance how information is provided to the user." *Id.* ¶ 14. However, unlike the ability to change "ring tones," "a user typically does not have the option on the device itself to modify characteristics of haptic feedback." *Id.* Ramsay discloses altering the speed of a motor with the use of an "eccentric rotating mass (ERM) actuator," or modifying "amplitude values" with the use of a "linear resonant actuator (LRA)." *Id.* ¶ 26.

3. Combining the References

Petitioner contends that combining Wakuda and Ramsay is a "predictable combination," "enabl[ing] a user to specify parameters (e.g., frequency and amplitude) associated with haptic effects, according to Ramsay." Pet. 10 (citing Ex. 1003 ¶¶ 92–93). Petitioner contends that "[t]he resulting system provides Wakuda's 'small-sized terminal devices, such as portable telephones, PDA, portable game equipment[],'" with "store[d] . . . user-specified haptic effects to be selected and used in generating desired haptic feedback." *Id.* (internal quotes quoting Ex. 1005, 1:11–14; citing Ex. 1003 ¶¶ 92–93;).

Petitioner contends that it would have been obvious to employ Ramsay's "input/output devices" equipped in its "end user device" with Wakuda's device where the devices are similar. Pet. 10 (citing Ex. 1003 ¶ 93; Ex. 1006 ¶¶ 19, 22–24). Petitioner contends that it would have been obvious to employ Ramsay's "[s]oftware and systems" into Wakuda's memory executed by a processor as Ramsay suggests, "to lead a user through the process of entering and/or modify[ing] parameters and characteristics of haptic tracks." *See id*. (alterations in original) (quoting Ex. 1006 ¶ 15; citing Ex. 1003 ¶ 93; Ex. 1006 ¶¶ 25–28). Petitioner explains that Ramsay's memory 16, as combined with Wakuda, would store "'a

software program for enabling an end user to create and/or modify haptic effects, the software program of which can be executed by processor [14],' and would 'also store haptic track files created or modified by the user and [] also store mixed track files, which include multiple haptic tracks combined together.'" *Id.* at 10–11(quoting Ex. 1006 ¶¶ 25, 28; citing Ex. 1006 ¶¶ 26, 27; Ex. 1003 ¶ 93). Petitioner also explains that "the resulting system would allow users to 'access[] programmable haptic design software 30 via GUI 24 and open[] a file to be edited,' and to 'interact with programmable haptic design software 30 by input and output mechanisms of GUI,' as taught by Ramsay." *Id.* at 11 (quoting Ex. 1006 ¶ 37; citing Ex. 1003 ¶ 93).

Petitioner points to Ramsay's disclosure that "modifying characteristics of haptic feedback was normally limited to professional designers, and that end users 'typically [did] not have the option on the device itself to modify characteristics of haptic feedback.'" Pet. 11 (quoting Ex. 1006 ¶ 14). "Therefore, a POSITA would have looked for references like Ramsay to expand the functionalities of haptic devices and allow end users to freely create and customize haptic effects." *Id.* (citing Ex. 1003 ¶ 94; Ex. 1006 ¶¶ 14–15). Petitioner also contends that implementing Ramsay's teachings and "user tools" in Wakuda would have provided "flexibility incustomizing haptic effects by allowing users to conveniently 'create or modify the haptic effect files directly on the device.'" *Id.* at 11–12 (citing Ex. 1003 ¶ 94). Petitioner adds that "[t]he resulting system would also benefit from Ramsay's GUI that displays haptic tracks and offers various, easy-to-use mechanisms for adjusting haptic parameters." *Id.* at 12 (citing Ex. 1006 ¶¶ 53–57). And "Wakuda-Ramsay enables the resulting system to 'provide a fuller haptic experience' by allowing users to "combine

or mix different haptic tracks together if desired" according to Ramsay. *Id.* (quoting Ex. 1006 ¶ 30; citing Ex. 1006 ¶ 47).

Petitioner also explains that a "POSITA would have recognized that vibrant haptic effects would result from the combination that enables independent controlling of the frequency and amplitude for oscillation." Pet. 12 (citing Ex. 1003 ¶ 95; Ex. 1018, 224). Petitioner adds that a "POSITA would have had a reasonable expectation of success in making the proposed modifications because Wakuda and Ramsay describe the same techniques for controlling a linear actuator to produce desired output." *Id.* (citing Ex. 1003 ¶ 96; Ex. 1005, 3:42–44; Ex. 1006 ¶ 26). Petitioner explains that "[t]he proposed modification merely involves implementing Ramsay's software solutions in Wakuda's hardware setup without substantially changing Wakuda's other structures." *Id.* at 12–13 (citing Ex. 1003 ¶ 97). Petitioner also explains that "Wakuda's and Ramsay's purposes (e.g., providing vibrational feedback) are compatible." *Id.* (citing Ex. 1003 ¶ 97). Petitioner adds that "combining Wakuda and Ramsay was merely the application of known techniques (Ramsay's software solution for user-customization of haptic effects) to a known device (Wakuda's vibration generator system) ready for improvement to yield predictable results (benefits articulated above)." *Id.* at 13 (citing *KSR*, 550 U.S. at 417).

At this stage, Petitioner's rationale supported by Petitioner's declarant's testimony that one of ordinary skill would have been motivated to combine Gregorio and Ramsay in the manner proposed is sufficiently persuasive for purposes of institution.

NINTENDO-1051, p. 24
Nintendo v. Resonant
IPR2025-00680

4. Analysis

For the "linear vibration module" preamble of independent claim 2, Petitioner generally relies on Wakuda's "bodily sensed vibration generator system mountable on small-sized information terminal devices, such as portable telephones, PDA, portable game equipment." Pet. 13–14 (quoting Ex. 1005, 1:11–16; citing Ex. 1003 ¶¶ 99–101; Ex. 1005, 3:43–45 (disclosing that "the movable body reciprocates linearly")); 25 (pointing to its analysis for disclaimed claim 1 to address the same or similar limitations of claim 2). Petitioner notes that Wakuda states that the resulting system includes '"vibration generator means 1' that includes 'casing 2,' 'covers 3,' 'coil 5,' 'movable body 6,' and 'control means 10,'" which correspond to claim elements recited in the body of claim 2. *Id.* at 14 (quoting Ex. 1005, 4:30–5:24, 6:11–62).[14]

For limitation 2.a, a "housing," Petitioner relies on Wakuda's casing 2. Pet. 14 (citing Ex. 1005, 4:34–38; Ex. 1003 ¶¶ 102–103).

For limitation 2.b, a "moveable component," Petitioner relies on the Wakuda's "moveable body 6" including "weight 7" and "magnet M." Pet. 14–15 (quoting Ex. 1005, 4:48–57; citing Ex. 1005, Fig. 2; Ex. 1003 ¶ 104).

For limitation 2.c, a "power supply," Petitioner contends that a person of ordinary skill in the art would have understood that Wakuda's electric coil 5 requires a power supply, and similarly, "'terminal devices, such as portable telephones, PDA, portable game equipment[]' were well-known to include a battery or connect to a power source to supply power to

[14] Based on the present record, it is not necessary to determine at this stage of the proceeding whether claim 1's preamble is limiting.

components internal to the devices." Pet. 16 (quoting Ex. 1005, 1:11–14; citing Ex. 1003 ¶ 106; Ex. 1019; Ex. 1007).

For limitation 2.d, "user-input features," Petitioner relies on Wakuda's terminal devices as quoted with respect to limitation 2.c above and described by Wakuda as "input/output device[s]." Pet. 16 (quoting Ex. 1005, 1:11–14; citing Ex. 1003 ¶¶ 107–108). Petitioner also relies on the Ramsay's description of an "end user device," such as a "mobile handset, cell phone, personal digital assistant (PDA)," which includes "input/output devices." *Id.* (quoting Ex. 1006 ¶¶ 19, 22; citing Ex. 1006 ¶ 24 ("keyboards, keypads," "touch screen," "touch pads, buttons, sliders")).

As determined above, limitation 2.e, a "driving component that drives the moveable component to oscillate within the housing," is a means-plus-function requirement subject to 35 U.S.C. § 112 ¶ 6, further requiring, for example, a coil structure or equivalent. *Supra* § I.IV.C.1. Petitioner reads this limitation onto Wakuda's electric coil 5, which drives the moveable component in two opposite directions. Pet. 17 (citing Ex. 1005, 6:4–10, Figs. 1A, 1B; Ex. 1003 ¶ 109).

As also determined above, limitation 2.f, a "control component that controls supply of power from the power supply to the driving component to cause the moveable component to oscillate at a frequency and an amplitude specified by user input received from the user-input features," is a means-plus-function limitation subject to 35 U.S.C. § 112 ¶ 6. According to Patent Owner, under one means-plus-function interpretation by the district court, and with respect to the amplitude function of the control component, this limitation requires that "a processor must compute an output value p and 'output[] p to the power supply' or more generally, must "provide a

corresponding output to the power supply so that the power supply provides a corresponding output to the driving component." Prelim. Resp. 11 (last quote quoting Ex. 2002,
5–6).[15] In Ground 1 here, Petitioner applies Patent Owner's construction. Pet. 5 (arguing that for Grounds 1, 2, 3A, and 4A, "the claims are also unpatentable under Patent Owner's various means-plus-function positions as to the 'control component'"); Sur-reply 1 ("[A]ny correct construction of 'control component' . . . should require at least the step to 'provide a corresponding output to the power supply,' corresponding to step 762 of Figure 7C of the '337 patent.").

For this requirement, Petitioner reads the control means onto Wakuda's "'signal generation means 12' that 'generates a drive signal S1 on the basis of a command from the vibration control means 14 to output the same to the drive means 13.'" Pet. 17 (quoting Ex. 1005, 6:23–39). Petitioner explains that drive signal S1 from "drive means 13 provides 'a drive current having a predetermined waveform . . . to the terminal Ta1 and the terminal Ta2 of the coil 5.'" *Id.* (quoting Ex. 1005, 6:23–39).

Petitioner contends that based on drive signal S1,

> a POSITA would have readily understood and found obvious that the drive means includes, or is coupled to, the power supply ([1c]), and that the control means (control component) controls, via the drive signal, the supply of current (supply of power) from the power supply, which is included in or coupled to the drive means, to the coil (moveable component ([1b])).

Pet. 17–18 (citing Ex. 1003 ¶ 110; Ex. 1005, Figs. 3–4).

---

[15] This is similar to the algorithmic structure as summarized in the Control Component Summary. *Supra* § IV.C.2.c. The parties will have further opportunity to argue if the differences are material during trial.

NINTENDO-1051, p. 27
Nintendo v. Resonant
IPR2025-00680

Petitioner annotates Wakuda's Figures 3 and 4 to illustrate the controllable power supply as follows:

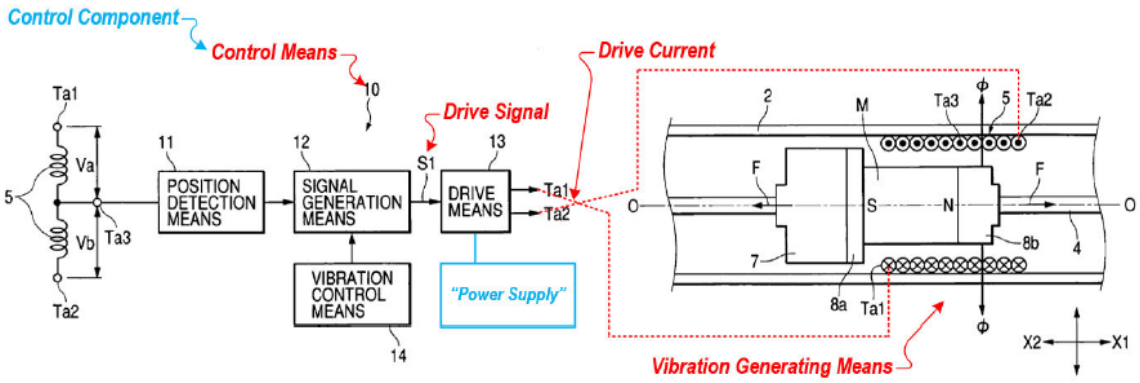

As annotated by Petitioner above, Wakuda's Figure 3 (left) joins to Figure 2 (right), with the necessary power supply (blue) inserted by Petitioner as part of drive means 13 to receive drive signal S1, which "switch[es] . . . current direction," based on control via signal generation means 12, and supply the desired drive current/power to Wakuda's vibration generating coil 5. *See* Pet. 18 (quoting Ex. 1005, 6:45–47).

Petitioner relies on Ramsay's GUI as providing menu options so that "[c]ertain parameters or characteristics of a haptic output or haptic track can be created, entered, changed, modified, etc." and such "modifiable parameters may include a frequency of vibration and amplitude of vibration." Pet. 19 (citing quoting Ex. 1006 ¶¶ 30–33, 46, 53–55; Ex. 1003 ¶ 112).

Patent Owner argues that with respect to annotated Figures 2 and 3 above, "both the box labeled 'Power Supply' and the line connecting it to the 'Drive Means' 13 are additions to the figures of Wakuda made by Petitioner." Prelim. Resp. 16. This is correct. However, Petitioner's annotated figure corresponds to what Wakuda fairly teaches on this

preliminary record based on the showing in the Petition that Wakuda necessarily requires some type of power supply to supply the drive means and the drive signal, as Patent Owner otherwise recognizes. *See* Prelim. Resp. 16–17 ("Both Petitioner and its expert base the existence of a power supply *on the fact the device uses current and that a 'battery' or other power source was purportedly known to be used in devices of types described in Wakuda's specification.*" (emphasis added) (citing Pet. 15–16; Ex. 1003 ¶¶ 105–106)).

Patent Owner also argues that

> [t]o the extent that Petitioner is suggesting that the S1 signal would be outputted to the power supply, the [P]etition offers no explanation for how a "battery" or other power source could accept such a drive signal or why a POSITA would have been motivated specifically to have the S1 signal supplied to the power supply, in light of the teachings of the cited prior art.

Prelim. Resp. 16. Patent Owner similarly argues that Petitioner's showing is conclusory. Sur-reply 2–3.[16]

---

[16] Patent Owner also contends that "[t]he Reply . . . appears to acknowledge that the Petition fails to demonstrate this step of the 'control component' [under a means-plus-function interpretation] is satisfied for Grounds 1 and 3A–3B." Sur-reply 1. Notwithstanding the Reply, the Petition addresses what corresponds to Patent Owner's means-plus-function interpretation as indicated above and further below. *See* Pet. 7, 31, 50, 66, 75, 80 (each Ground sub-heading asserting the Ground addresses one or more means-plus-function interpretations); Sur-reply 1 ("[A]ny correct construction of 'control component' . . . should require at least the step to 'provide a corresponding output to the power supply,' corresponding to step 762 of Figure 7C of the '337 patent."); Reply 2 (indicating Ground 1 addresses the plain and ordinary meaning). The parties will have the opportunity to clarify this issue during trial.

NINTENDO-1051, p. 29
Nintendo v. Resonant
IPR2025-00680

Nevertheless, Petitioner explains generally that such a control signal allows the processor, and ultimately, the user, to control the supply of power from the drive means to the coil ultimately to control the desired haptic effects. *See* Pet. 17 ("According to the drive signal S1, the drive means 13 provides 'a drive current having a predetermined waveform . . . to the terminal Ta1 and the terminal Ta2 of the coil 5.'" (quoting Ex. 1005, 6:23–39)). Stated differently, Petitioner generally reasons that using Wakuda's drive signal to control the power supply allows the user to control various haptic effects (providing different input waveforms) using Ramsay's GUI. *See id.* at 17–19. Moreover, the '337 patent does not disclose any detail or structure for the controllable power supply, indicating that such a controllable power supply was well-known. *See* Ex. 1001, 6:33–35 ("The power supply 612 receives a control input 624 from the CPU to control the current supplied to the H-bridge switch 618 for transfer to the coil 626."); *Uber Techs., Inc. v. X One, Inc.*, 957 F.3d 1334, 1339 (Fed. Cir. 2020) (reasoning that when a patent specification "is entirely silent on how to" perform a claimed feature, it "suggest[s] that a person of ordinary skill in the art was more than capable of" performing that claimed feature).

On this preliminary record, Petitioner sufficiently shows for purposes of institution that Wakuda-Ramsay teaches limitation 2f.

Limitation 2.g recites "wherein the control component drives simultaneous oscillation of the moveable component at two or more frequencies to generate complex vibration modes." Petitioner contends that the combined teachings of Wakuda and Ramsay render this limitation obvious. *See* Pet. 25 ("Wakuda's vibration generator system operates the movable body at two frequencies, such as a natural/resonant frequency and

NINTENDO-1051, p. 30
Nintendo v. Resonant
IPR2025-00680

an envelope frequency that is lower than the natural frequency." (citing Ex. 1005, 2:18–46, 9:12–10:42, Figs. 5–6)), 26 ("Additionally, Ramsay describes that 'one or more frequencies' can be entered for each haptic track." (citing Ex. 1006 ¶ 46)).

On this preliminary record, Petitioner sufficiently shows for purposes of institution that Wakuda-Ramsay teaches claim 2.

Claim 3 recites "[t]he linear vibration module of claim 2 wherein the complex vibration modes include: a primary oscillation frequency modulated by a modulating oscillation frequency; a beat frequency, and an aperiodic oscillation waveform." Petitioner contends that "Wakuda's 'vibrational waveform of the movable body 6' includes a natural/resonance frequency (primary frequency) and an envelope frequency defined by 'a line connecting peaks of amplitude of the movable body 6 together' and adjustable to be 'bodily sensed.'" Pet. 28 (quoting Ex. 1005, 9:12–48, Fig. 5; Ex. 1003 ¶ 129). Petitioner explains that "like the '337 patent, the difference between the higher resonance frequency and the lower envelope frequency is the beat frequency." *Id.* (citing Ex. 1003 ¶ 129; Ex. 1001, 13:13–41, Figs. 22A-23; Ex. 1005, 2:29–46).

On this preliminary record, Petitioner sufficiently shows for purposes of institution that Wakuda-Ramsay teaches claim 3. Patent Owner does not address Petitioner's showing for claim 3. *See generally* Prelim. Resp.

Based on our analysis set forth above, including our analysis of Patent Owner's arguments, we determine, on the current record and for purposes of this Decision, that the information presented in the Petition demonstrates a reasonable likelihood that Petitioner will prevail in establishing that claims 2

and 3 are unpatentable under 35 U.S.C. § 103(a) over the combination of Wakuda and Ramsay.

E. Ground 2, Alleged Obviousness of Claims 2 and 3 over Wakuda, Ramsay, Rossi, and Aldrich

Petitioner contends that claims 2 and 3 would have been obvious over the combined teachings of Wakuda, Ramsay, Rossi, and Aldrich. Pet. 31–38.

1. Rossi

Rossi is directed to "circuits for a switching mode driving of a load and in particular to circuit arrangements for controlling the current being delivered to the load." Ex. 1020, 1:8–11. Rossi discloses an H-bridge switching circuit for controlling electric motors and other inductive loads using pulse width modulation. *Id.* at 1:8–15, Fig. 1. Rossi further discloses an improved circuit for sensing the magnitude and direction of a current flowing through the load of the H-bridge switching circuit that includes "two pairs of analog switches arranged in a bridge configuration." *Id.* at code (57); *see also id.* at Figs. 4, 6, 1:65–3:55, Figs. 4, 6.

NINTENDO-1051, p. 32
Nintendo v. Resonant
IPR2025-00680

Figure 6 follows:

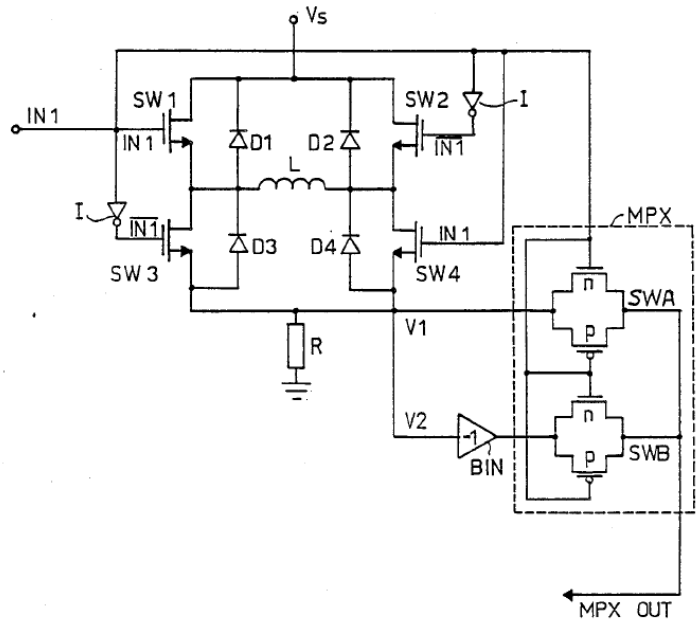

FIG. 6

Figure 6 is a circuit diagram of an H-bridge stage utilizing analog switches implemented by means of MOS transistors. Ex. 1020, 1:56–64. Driving signal IN1 is split and a portion passed through inverters I to generate an internal driving signal IN1 and inverted signal $\overline{\text{IN1}}$. *Id.* at 2:64–65. Those signals control the state of transistors SW1–SW4 and thus control the direction of current through inductive load L, and also drive inputs V1 and V2 to multiplexer MPX, the output of which is used to determine the magnitude and direction of the electric current flowing through load L. *Id.* at 2:65–3:10.

2. Aldrich

Aldrich describes a feedback control algorithm to drive an electromechanical device that is driven by a sinusoidal excitation signal to "one of the resonance peaks and eventually to oscillate about the peak."

Ex. 1021, 41, 42.[17] The digital control system is implemented by means of an algorithm that includes a "hill-climbing control algorithm" for coarse tracking to find resonance, an "estimation-based extremum seeking control (ESC) algorithm" for fine resonance tracking, and a supervisory algorithm that switches between the other two algorithms. *Id.* at 42. The drive frequency is incremented or decremented to maintain oscillation about a resonance frequency. *Id*

3. Analysis

Petitioner argues that it would have been obvious to modify the Wakuda-Ramsay combination, using Rossi's H-bridge switch to provide oscillating power, and also using Aldrich's algorithm to replace Wakuda's monitoring technique, in order to maintain a resonance frequency by incrementing or decrementing the drive frequency. Pet. 32–38 (citing Ex. 1004, 4:22–28, 4:42–48; 1005, 6:4–10; Ex. 1020, 1:65–2:11, 3:43–55, Figs. 4, 6; Ex. 1023, 7:47–50 ("well-known H-bridge circuit"); Ex. 1003 ¶¶ 135–144). Petitioner's expert provides implementation details of Rossi and Aldrich, including Rossi's well-known H-bridge switch, and Aldrich's hill-climb technique, which employs a Boolean value to indicate whether the frequency is increasing, with local variables set to default integer values. *See id.* (citing Ex. 1003 ¶¶ 135–144).

Petitioner argues that these modifications would have provided a simple, cost-effective, and reliable circuit design to deliver Wakuda's drive signal to the coil. *See* Pet. 33–34 (citing Ex. 1003 ¶ 143). Petitioner also contends that "a POSITA would have recognized that combining Rossi and Wakuda-Ramsay was the application of known techniques (Rossi's H-bridge

[17] We refer to the page numbers in the original.

NINTENDO-1051, p. 34
Nintendo v. Resonant
IPR2025-00680

circuit implementation) to a known device (Wakuda-Ramsay's system that switches polarity of current) ready for improvement to yield predictable results (benefits articulated above)." *Id.* at 34 (citing *KSR*, 550 U.S. at 417).

Petitioner also argues that

> [a] POSITA would have recognized and found it obvious to set local variables to default values so that the control signal is generated to produce oscillation, which is then adjusted as appropriate through feedback control. [Ex. 1003 ¶ 147.] A POSITA would have been motivated to set default values for specific local variables to facilitate initiation of the actuator close to expected and/or user-selected operating parameters. *Id.*

Pet. 36.

Petitioner adds the following with respect to limitation 2.f:

> Further, the combination includes a switch (e.g., H-bridge switch) according to Rossi. [Ex. 1003 ¶ 160]. A POSITA would have found obvious that, based on the Wakuda-Ramsay-Rossi-Aldrich combination, the processor is programmed to provide a control output to the H-bridge switch for controlling the direction of the drive signal through the coil. *Id.* For example, a control signal is output from the processor to a transistor of the H-bridge switch to control whether the transistor is in an open or closed state, providing the direction signal. *Id.* In the resulting system, the switch receives a directional signal (e.g., at "IN1") that selects a corresponding direction of the opposite directions in which the driving component drives the moveable component. *Id.*; [Ex. 1020], 1:65–2:15; 3:44–55.

Pet. 39.

Petitioner relies on its Wakuda-Ramsay showing as summarized above in Ground 1 to address claim 3. Pet. 49 (citing Ex. 1003 ¶ 196).

Patent Owner relies on its arguments with respect to Ground 1 as addressed above, asserting that Petitioner's showing for limitations 2.c and 2.f is deficient. Prelim. Resp. 17. This argument does not address

NINTENDO-1051, p. 35
Nintendo v. Resonant
IPR2025-00680

Petitioner's showing here that relies further on Aldrich-Rossi to address limitations 2.c and 2.f. Therefore, this argument is unavailing to undermine the Petition for institution purposes for the reasons discussed above.

On this preliminary record, Petitioner sufficiently shows for purposes of institution that Wakuda-Ramsay-Rossi-Aldrich renders claims 2 and 3 obvious. Patent Owner does not address Petitioner's showing for claim 3. *See generally* Prelim. Resp.

Based on our analysis set forth above, including our analysis of Patent Owner's arguments, we determine, on the current record and for purposes of this Decision, that the information presented in the Petition demonstrates a reasonable likelihood that Petitioner will prevail in establishing that claims 2 and 3 are unpatentable under 35 U.S.C. § 103(a) over the combination of Wakuda, Ramsay, Rossi, and Aldrich.

F. Ground 3A, Alleged Obviousness of Claim 2 over Gregorio, Ramsay, and Wakuda

Petitioner contends that claim 2 would have been obvious over the combined teachings of Gregorio, Ramsay, and Wakuda. Pet. 50–66.

1. Gregorio (Ex. 1004)

Gregorio discloses a device with an "LRA [Linear Resonant Actuator] to generate vibrotactile haptic feedback on a user interface." Ex. 1004, 2:3–5. Figure 1 is reproduced below.

NINTENDO-1051, p. 36
Nintendo v. Resonant
IPR2025-00680

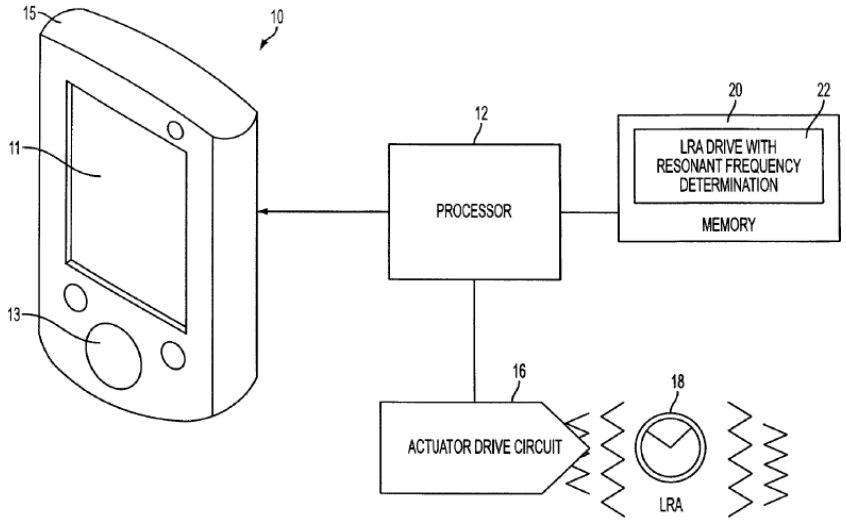

FIG. 1

Figure 1 is a block diagram of a haptically-enabled system 10, such as a cellular telephone, PDA, or computer tablet, which includes a haptic feedback mechanism that generates vibrations on the system. Ex. 1004, 2:10–15, 3:1–2. The system includes processor 12, memory 20, actuator drive circuit 16, and LRA actuator 18. *Id.* at 2:18–20. Processor 12 controls the haptic effects based on high level parameters including magnitude, frequency and duration. *Id.* at 2:25–30. Processor 12 outputs control signals to drive circuit 16, which includes electronic components and circuitry used to supply LRA 18 with the required electrical current and voltage to cause the desired haptic effects. *Id.* at 2:36–39. Memory 20 includes LRA Drive with Resonant Frequency Determination module 22 which are instructions executed by processor 12 to generate drive signals for LRA 18. *Id.* at 2:46–49.

Figure 2 follows:

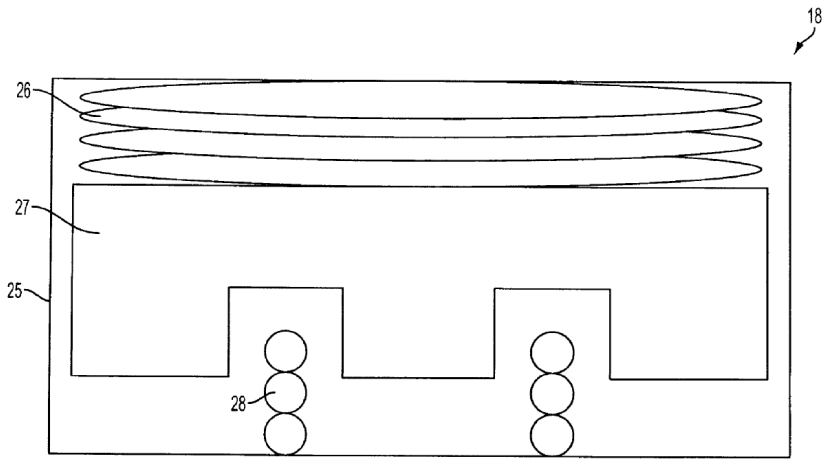

FIG. 2

Figure 2 is a cut-away side view of LRA 18 including casing 25, magnet/mass 27, linear spring 26, and electric coil 28. Ex. 1004, 3:12–14. When current flows through coil 28, a magnetic field forms around the coil to interact with the magnetic field of magnet 27, and depending on the direction of the current flow, pushes or pulls on the magnet to compress or decompress the spring. *Id.* at 3:17–24.

2. Combining the References

Petitioner argues that it would have been obvious to modify Gregorio to include the ability disclosed in Ramsay to allow a user to customize and store parameters associated with haptic effects, such as creating "haptic track files" that specify variations in the amplitude and frequency of the effect over time to achieve a desired effect. Pet. 53–55 (citing Ex. 1006 ¶¶ 15, 25–28, 37; Ex. 1003 ¶¶ 199–203). Petitioner argues that this combination would have been motivated by the desire to expand the functionalities of haptic devices to allow end users to create and customize haptic effects, to provide a fuller haptic experience, and provide a user-configurable desired output. *Id.* at 53–54 (citing Ex. 1004, 2:3–9; Ex. 1006 ¶¶ 15, 25–28, 37; Ex. 1003 ¶¶

199–205). Petitioner argues that this combination would have had a reasonable expectation of success given that both references deal with linear actuators, both disclose storing frequency and amplitude values, and the combination involves routine knowledge of software techniques. *Id.* at 49–50 (citing Ex. 1004, 2:3–9; Ex. 1006 ¶¶ 17, 26–28; Ex. 1003 ¶¶ 197–198).

Petitioner also contends that Gregoria and Wakuda teach similar vibration generating means structure. Pet. 55 (citing Ex. 1003 ¶ 206; Ex. 1005, 5:51–6:10; Ex. 1004, 3:17–28). Petitioner contends that "[b]ecause Gregorio's description of the main components of the LRA (Figure 2) is only at a high level, a POSITA would have naturally looked to other references like Wakuda for implementation details." *Id.* at 55 (citing Ex. 1003 ¶ 207). Petitioner notes that "Wakuda's vibration generating means are 'mountable on small-sized information terminal devices, such as portable telephones, PDA.'" *Id.* at 56 (quoting Ex. 1005, 1:11–14). Accordingly, Petitioner contends that using Wakuda's small vibration generating means provides a benefit to Gregorio-Ramsay's combined device, and "a POSITA would have been prompted to combine Gregorio-Ramsay and Wakuda when doing so was the application of known techniques (Wakuda's vibration generator) to a known system (Gregorio-Ramsay's similar haptic feedback system) ready for improvement to yield predictable results (benefits articulated above)." *Id.* (citing *KSR*, 550 U.S. at 417).

At this stage, Petitioner's rationale supported by Petitioner's declarant's testimony that one of ordinary skill would have been motivated to combine Gregorio, Ramsay, and Wakuda in the manner proposed is sufficiently persuasive for purposes of institution.

NINTENDO-1051, p. 39
Nintendo v. Resonant
IPR2025-00680

3. Analysis

For the "vibration module" preamble of independent claim 2, Petitioner generally relies on the disclosure in Gregorio of a "haptic feedback system," which includes the elements recited in the body of claim 2 as discussed below. *See* Pet. 57–58 (citing Ex. 1004, 2:10–20, Fig. 1; Ex. 1003 ¶¶ 92–93).[18]

For limitation 2.a, a "housing," Petitioner relies on Gregorio's housing 25. Pet. 58 (citing Ex. 1004, 3:13–15, Fig. 2; Ex. 1003 ¶¶ 94–95).

For limitation 2.b, a "moveable component," Petitioner relies on the Gregorio's magnet/mass 27. Pet. 59 (citing Ex. 1004, 3:12–14, 3:17–21, Fig. 2; Ex. 1003 ¶ 217).

For limitation 2.c, a "power supply," Petitioner notes that Gregorio's "actuator drive circuit 16" "includes electronic components and circuitry used to supply LRA 18 with the required electrical current and voltage to cause the desired haptic effects." Pet. 59 (quoting Ex. 1004, 2:18–39, 3:17–20, Fig. 1; citing Ex. 1003 ¶ 218). Petitioner argues that "[b]ecause electric power is defined by current and voltage, a [person of ordinary skill in the art] would have understood that actuator drive circuit 16 corresponds to, or is coupled to, a power supply." *Id.* at 60 (citing Ex. 1038, 1–2; Ex. 1003 ¶ 218).

For limitation 2.d, "user-input features," Petitioner relies on the Gregorio's of "touch sensitive surface 11" that "generates and displays images for the user to interact with, such as keys, dials, etc." and/or "mechanical keys/buttons 13." Pet. 60–61 (citing Ex. 1004, Fig. 1, 2:10–14,

[18] Based on the present record, it is not necessary to determine at this stage of the proceeding whether claim 1's preamble is limiting.

2:64–67; Ex. 1003 ¶ 100). Petitioner also relies on the disclosure in Ramsay of using a graphical user interface (GUI) for providing a menu options. *Id.* at 61 (citing Ex. 1006 ¶¶ 15, 24, 32, 53; Ex. 1003 ¶ 222).

As determined above, limitation 2.e, a "driving component that drives the moveable component to oscillate within the housing," is a means-plus-function requirement subject to 35 U.S.C. § 112 ¶ 6, further requiring, for example, a coil structure or equivalent. *Supra* § IV.C.1. Petitioner reads this limitation onto Gregorio's electric coil 28. Pet. 61 (citing Ex. 1004, 2:10–20, 3:12–28, Fig. 2; Ex. 1003 ¶¶ 223–224.

As also determined above, limitation 2.f, a "control component that controls supply of power from the power supply to the driving component to cause the moveable component to oscillate at a frequency and an amplitude specified by user input received from the user-input features," is a means-plus-function requirement subject to 35 U.S.C. § 112 ¶ 6. For this requirement, Petitioner appears to employ Patent Owner's alternative means-plus-function interpretation as outlined above in Ground 1. *See supr*a § IV.D.4. Petitioner relies on Gregorio's processor 12 and memory 20 programmed with LRA Drive with Resonant Frequency Determination module 22 and/or circuit 400, which Petitioner alleges controls the supply of power from the power supply to the driving component, including the required electrical current and voltage, based on control signals from the processor, to supply the magnitude and frequency. Pet. 63–64 (citing Ex. 1004, Fig. 1, 2:18–50, 4:20–22, 4:28–31, 4:49–65; Ex. 1003 ¶¶ 227, 231). Petitioner also relies on Ramsay's disclosure of storing frequency and amplitude parameters so that "in the resulting system, the user can set and modify various parameters including 'a frequency of vibration and

amplitude of vibration' through [a] GUI, as taught by Ramsay." Pet. 64 (citing Ex. 1006 ¶¶ 5, 15, 24, 30, 32, 33, 46, 53–55; quoting Ex. 1003 ¶ 231).

Patent Owner argues that the Petition fails to show that the combined teachings of Gregorio, Ramsay, and Wakuda "discloses or renders obvious the claimed 'power supply' and 'control component' to satisfy limitations 2[c] and 2[f], under a proper construction of the term 'control component.'" Prelim. Resp. 18. Specifically, Patent Owner argues that "the 'power supply' of limitation 2[c] must be capable of being provided an output, and the 'control component' of limitation 2[f] must be capable of providing such an output to the power supply." *Id.* at 19. Patent Owner argues that Petitioner's reliance on the actuator drive circuit 16 of Figure 1 of Gregorio, which Petitioner argues includes a power supply, is insufficient because "[n]othing in Gregorio shows the processor outputting a signal to current generator 422, and Petitioner offers no explanation for how it would have been obvious to modify Gregorio Figure 4 to do so." *Id.* at 20; *see also* Sur-reply 2–3 (arguing that Petitioner's showing is conclusory).

Patent Owner also argues that Petitioner's alternative reliance on current generator 422 in Figure 4 of Gregorio as the power supply is without merit because the only inputs to 422 are from a low-pass filter 421 and the signal U2A from an or-gate, but there is no input from the processor. *Id.* (citing Ex. 1004, Fig. 4). Accordingly, Patent Owner argues that "Petitioner fails to explain why a POSITA would have been motivated to use some circuitry other than what is shown in Figure 4 to supply current to the LRA and fails to show how an alternative 'power supply' to that in Gregorio

Figure 4 would receive the required output from the 'control component.'" *Id.* at 21.

Contrary to these arguments on this preliminary record, Petitioner sufficiently shows that step 762 of Figure 7C would have been taught or suggested by the proffered combination. That step computes an output "p" value or its equivalent, which corresponds to the current "strength" — *i.e.*, amplitude — of the current through coil 514, and applies it to the power supply so that it provides that current to the coil. Ex. 1001, Fig. 7C, 8:26–30. Petitioner relies on its declarant's testimony that it would have been obvious that actuator drive circuit 16 of Gregorio "corresponds to, or is coupled to, a power supply." Pet. 59 (citing Ex. 1003 ¶ 218; Ex. 1038, 1–2). Petitioner further argues that "Gregorio's 'processor 12,' coupled to 'memory 20,' controls 'actuator drive circuit 16' to provide desired haptic effects via LRA 18," and "[i]n providing the haptic effects, the processor controls supply of power from the power supply to the driving component." Pet. 62–63 (internal quotes quoting Ex. 1004, 2:18–20; citing Ex. 1003 ¶ 226; Ex. 1004, 2:36–39, 3:12–28).

In support of Petitioner's showing, Gregorio's Figure 1 illustrates control or signal line from processor 12 to actuator circuit 16. At the cited passages, Gregorio states that in one embodiment, "[p]rocessor 12 *outputs the control signals to drive circuit 26 which includes electronic components and circuitry used to supply LRA 18 with the required electrical current and voltage to cause the desired haptic effects*." Ex. 1004, 2:36–39. Petitioner's expert also testifies that "[b]ecause electric power is defined by current and voltage, a POSITA would have understood that actuator drive circuit 16

(including 'electronic components and circuitry') is a power supply." Ex. 1003 ¶ 218 (citing Ex. 1038, 1–2).

On this preliminary record, the Petition sufficiently shows for institution purposes that Gregorio's processor 12 controls Gregorio's power supply to provide power to its haptic unit or that such power supply control would have been obvious in order to allow a user to control the desired haptic effect. The '337 patent does not disclose any detail or structure for the controllable power supply, indicating that such a controllable power supply was well-known. *See* Ex. 1001, 6:33–35 ("The power supply 612 receives a control input 624 from the CPU to control the current supplied to the H-bridge switch for transfer to the coil 626."); *Uber Techs.*, 957 F.3d 1339 (reasoning that when a patent specification "is entirely silent on how to" perform a claimed feature, it "suggest[s] that a person of ordinary skill in the art was more than capable of" performing that claimed feature).

Limitation 2.g recites "wherein the control component drives simultaneous oscillation of the moveable component at two or more frequencies to generate complex vibration modes."

Petitioner contends that the combined teachings of Wakuda and Ramsay render this limitation obvious. *See* Pet. 65 (referring to its showing for limitation 2.g in Ground 1). On this preliminary record, Petitioner sufficiently shows for purposes of institution that Wakuda-Ramsay teaches limitation 2g. Patent Owner does not dispute Petitioner's showing for limitation 2.g.

Based on our analysis set forth above, including our analysis of Patent Owner's arguments, we determine, on the current record and for purposes of this Decision, that the information presented in the Petition demonstrates a

reasonable likelihood that Petitioner will prevail in establishing that claim 2 is unpatentable under 35 U.S.C. § 103(a) over the combination of Gregorio, Ramsay, and Wakuda.

G. Ground 3B, Alleged Obviousness of Claims 2 and 3 over Gregorio, Ramsay, and Tierling

Petitioner contends that claims 2 and 3 would have been obvious over the combined teachings of Gregorio, Ramsay, and Tierling. Pet. 66–75.

1. Tierling

Tierling provides "mapping drive signals to haptic sensations" at user interface devices, such as wireless phone. Ex. 1008 ¶¶ 2–3. Tierling's "[e]ffect mappings . . . can alter or control effect components or parameters of a haptic sensation, such as amplitude, waveshape, frequency, phase, duration, or delay of the haptic feedback to be output by a haptic device." *Id.* ¶ 31. The system controls these effect parameters "by way of synthesis or other combination" and "output[s] them simultaneously or in sequence." *Id.* "[T]he frequency of a first component can be modulated by the frequency of a second component." *Id.*

In one implementation, Tierling's system operates at both "a desired output frequency and a resonant frequency of a haptic device" which are superimposed on each other. Ex. 1008 ¶¶ 110–112, Figures 9–10.

Therefore, Tierling's system drives the harmonic haptic device "without losing the low-frequency components." *Id.*

2. Analysis

As noted above, Petitioner contends that claims 2 and 3 would have been obvious over the combined teachings of Gregorio, Ramsay, and Tierling. *See* Pet. 70–75. Petitioner primarily relies on its analysis of claim

NINTENDO-1051, p. 45
Nintendo v. Resonant
IPR2025-00680

2 under Gregorio-Ramsay in Ground 3A to address all its limitations except for limitation 2.g, adding the teachings of Tierling to address limitation 2.g and claim 3. *See id.* Patent Owner relies on its arguments addressed above in connection with limitations 2c and 2f. Prelim. Resp. 22.

Based on our analysis set forth above, including our analysis of Patent Owner's arguments in connection with Ground 3A based on Gregorio-Ramsay, we determine, on the current record and for purposes of this Decision, that the information presented in the Petition demonstrates a reasonable likelihood that Petitioner will prevail in establishing that claims 2 and 3 are unpatentable under 35 U.S.C. § 103(a) over the combination of Gregorio, Ramsay, and Tierling.

H. Ground 4A, Alleged Obviousness of Claim 2 over Gregorio, Ramsay, Wakuda, Rossi, and Aldrich

Petitioner contends that claim 2 would have been obvious over the combined teachings of Gregorio, Ramsay, Wakuda, Rossi, and Aldrich. Pet. 75–79. Petitioner primarily relies on its analysis of claim 2 under Gregorio-Ramsay-Wakuda in Ground 3A as summarized above, adding Rossi and Aldrich to suggest controlling an H-bridge switch and provide feedback control of the desired frequencies, as outlined above in Section IV.E. *See id.*; *supra* §§ IV.E, IV.F. Patent Owner relies on its arguments addressed above in connection with limitations 2c and 2f. Prelim. Resp. 22.

Based on our analysis set forth above, including our analysis of Patent Owner's arguments in connection with Ground 3A based on Gregorio-Ramsay, we determine, on the current record and for purposes of this Decision, that the information presented in the Petition demonstrates a reasonable likelihood that Petitioner will prevail in establishing that claim 2

is unpatentable under 35 U.S.C. § 103(a) over the combination of Gregorio, Ramsay, Wakuda, Rossi, and Aldrich.

I. Ground 4B, Alleged Obviousness of Claims 2 and 3 over Gregorio, Ramsay, Tierling, Rossi, and Aldrich

Petitioner contends that claims 2 and 3 would have been obvious over the combined teachings of Gregorio, Ramsay, Tierling, Rossi, and Aldrich. Pet. 80. Petitioner primarily relies on its analysis of claims 2 and 3 under Gregorio-Ramsay-Tierling in Ground 3B, adding Rossi and Aldrich to suggest controlling an H-bridge switch and provide feedback control of the desired frequencies as outlined above in Section IV.E. *See id.*; *supra* §§ IV.E, IV.G. Patent Owner relies on its arguments addressed above in connection with limitations 2c and 2f. Prelim. Resp. 22.

Based on our analysis set forth above, including our analysis of Patent Owner's arguments in connection with Ground 3A based on Gregorio-Ramsay, we determine, on the current record and for purposes of this Decision, that the information presented in the Petition demonstrates a reasonable likelihood that Petitioner will prevail in establishing that claim 2 is unpatentable under 35 U.S.C. § 103(a) over the combination of Gregorio, Ramsay, Tierling, Rossi, and Aldrich.

V. CONCLUSION

After considering the evidence and arguments presented in the Petition and the Preliminary Response, we determine that Petitioner has demonstrated a reasonable likelihood of prevailing on its assertion that at least one claim of the '337 patent is unpatentable. Accordingly, we institute an *inter partes* review of claims 2 and 3 and all of the grounds presented in the Petition. *See* 37 C.F.R. § 42.108(a); *SAS Inst., Inc. v. Iancu*, 138 S. Ct.

NINTENDO-1051, p. 47
Nintendo v. Resonant
IPR2025-00680

1348, 1359–60 (2018); *AC Techs. S.A. v. Amazon.com, Inc.*, 912 F.3d 1358, 1364 (Fed. Cir. 2019) ("[I]f the Board institutes an IPR, it must . . . address all grounds of unpatentability raised by the petitioner."). At this stage of the proceeding, we have not made a final determination as to the patentability of these challenged claims.

VI. ORDER

In consideration of the foregoing, it is hereby

ORDERED that pursuant to 35 U.S.C. § 314, *inter partes* review is instituted as to challenged claims 2 and 3 of the '337 patent with respect to all grounds of unpatentability presented in the Petition; and

FURTHER ORDERED that *inter partes* review is commenced on the entry date of this Order, and pursuant to 35 U.S.C. § 314(c) and 37 C.F.R. § 42.4, notice is hereby given of the institution of a trial.

NINTENDO-1051, p. 48
Nintendo v. Resonant
IPR2025-00680

PETITIONER:
W. Karl Renner
Thomas Rozylowicz
Sangki Park
axf-ptab@fr.com
tar@fr.com
spark@fr.com

PATENT OWNER:
Reza Mirzaie
Qi Tong
Kristopher Davis
Neil Rubin
rmirzaie@raklaw.com
ptong@raklaw.com
kdavis@raklaw.com
nrubin@raklaw.com