US 20070235823A1

(19) United States

(12) Patent Application Publication

(10) Pub. No.: US 2007/0235823 A1

(43) Pub. Date: Oct. 11, 2007

Hsu et al.

(54) CMOS DEVICES WITH IMPROVED GAP-FILLING

(76) Inventors: **Ju-Wang Hsu**, Taipei City (TW); **Chih-Hsin Ko**, Fongshan City (TW); **Jyu-Horng Shieh**, Hsin-Chu (TW); **Baw-Ching Perng**, Hsinchu (TW); **Syun-Ming Jang**, Hsin-Chu (TW)

Correspondence Address:
SLATER & MATSIL, L.L.P.
17950 PRESTON ROAD, SUITE 1000
DALLAS, TX 75252 (US)

(21) Appl. No.: 11/393,369

(22) Filed: Mar. 30, 2006

Publication Classification

(51) Int. Cl.

H01L	*29/94*	(2006.01)
H01L	*29/76*	(2006.01)
H01L	*31/00*	(2006.01)

(52) U.S. Cl. 257/411

(57) ABSTRACT

A semiconductor structure includes a substrate, and a first MOS device on the first region of the substrate wherein the first MOS device includes a first spacer liner. The semiconductor structure further includes a second MOS device on the second region wherein the second MOS device includes a second spacer liner. A first stressed film having a first thickness is formed over the first MOS device and directly on the first spacer liner. A second stressed film having a second thickness is formed over the second MOS device and directly on the second spacer liner. The first and the second stressed films may be formed of a same material.

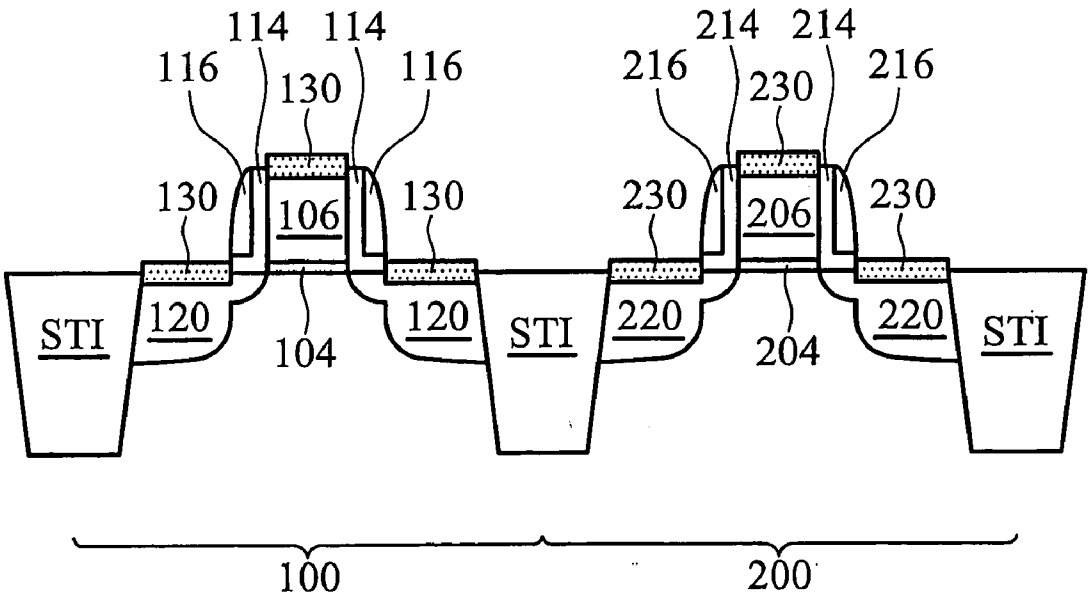

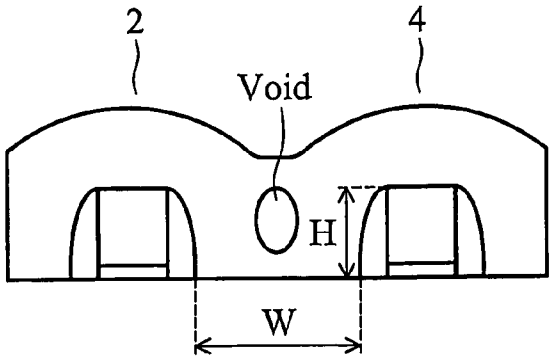

FIG. 1 (PRIOR ART)

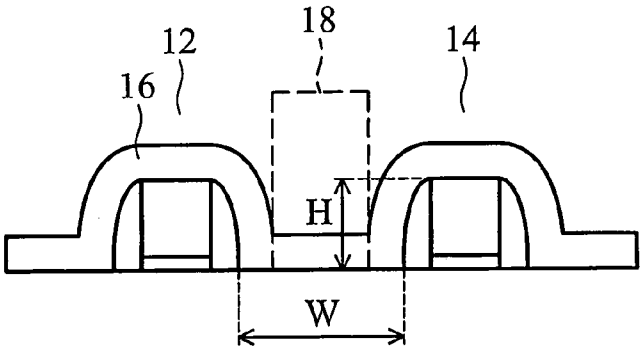

FIG. 2A (PRIOR ART)

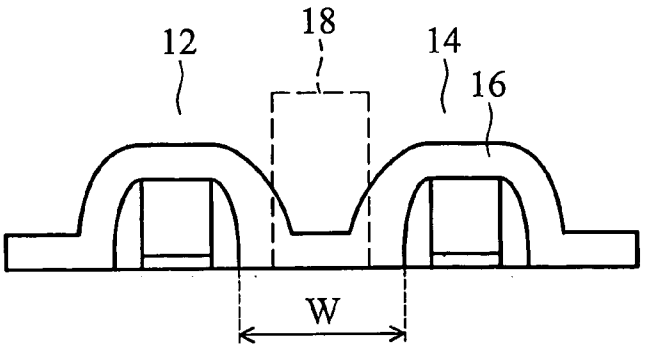

FIG. 2B (PRIOR ART)

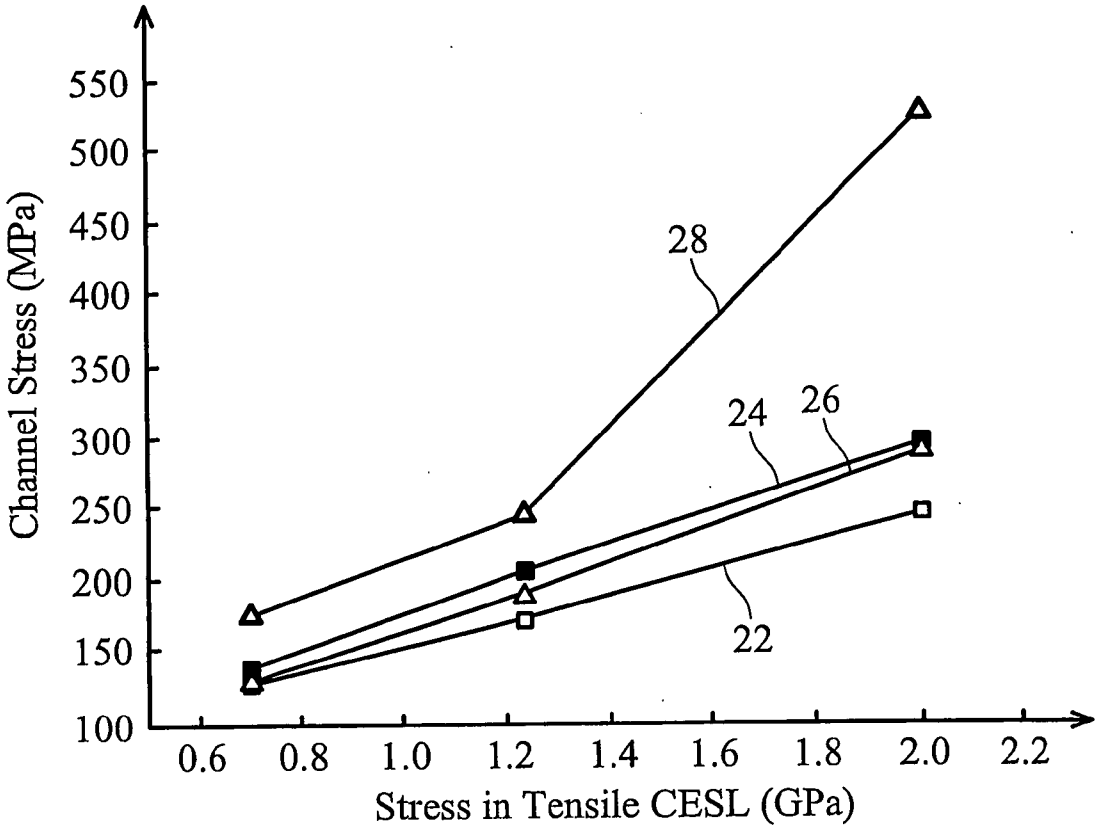
Channel Stress (MPa)
550
500
450
400
350
300
250
200
150
100
0.6
0.8
1.0
1.2
1.4
1.6
1.8
2.0
2.2
Stress in Tensile CESL (GPa)
28
24
26
22

FIG. 3

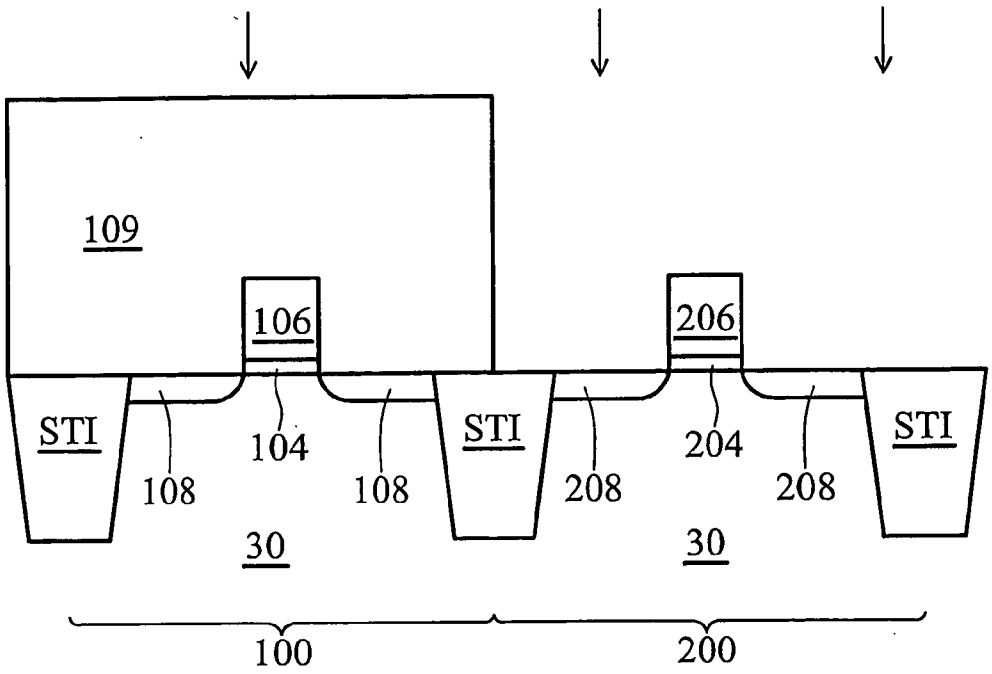
109
106
206
STI
STI
STI
104
204
108
108
208
208
30
30
100
200

FIG. 4

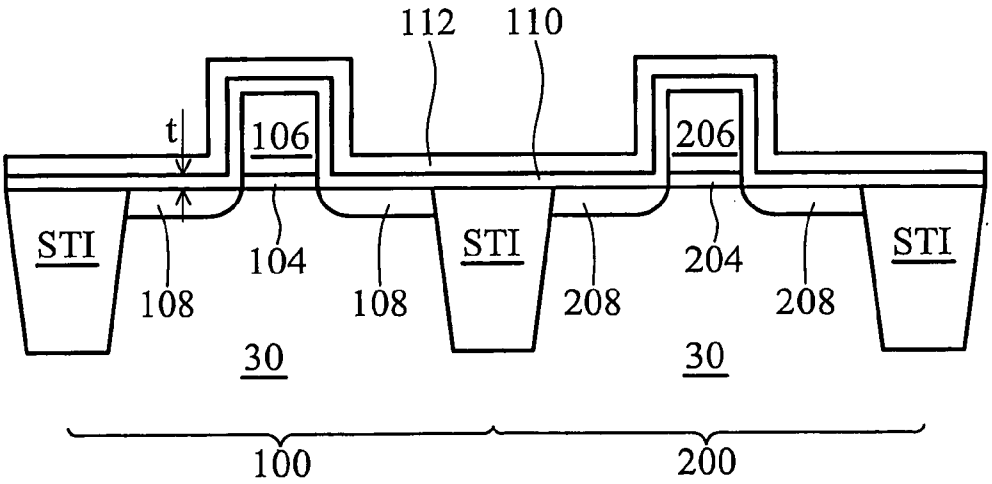
112
110
t
106
206
STI
STI
STI
104
204
108
108
208
208
30
30
100
200

FIG. 5

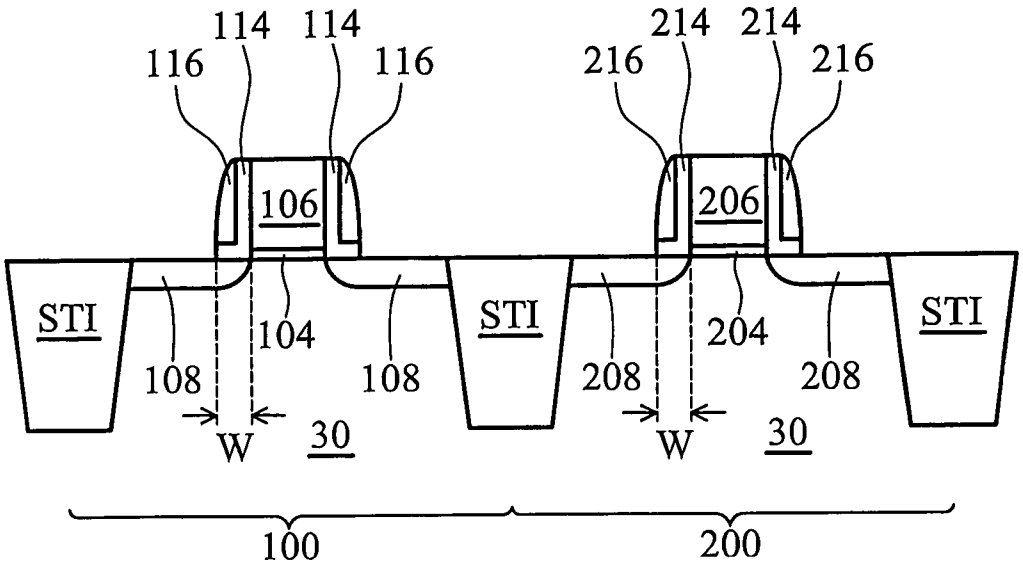
114
114
116
116
214
214
216
216
106
206
STI
STI
STI
104
204
108
108
208
208
W
30
W
30
100
200

FIG. 6

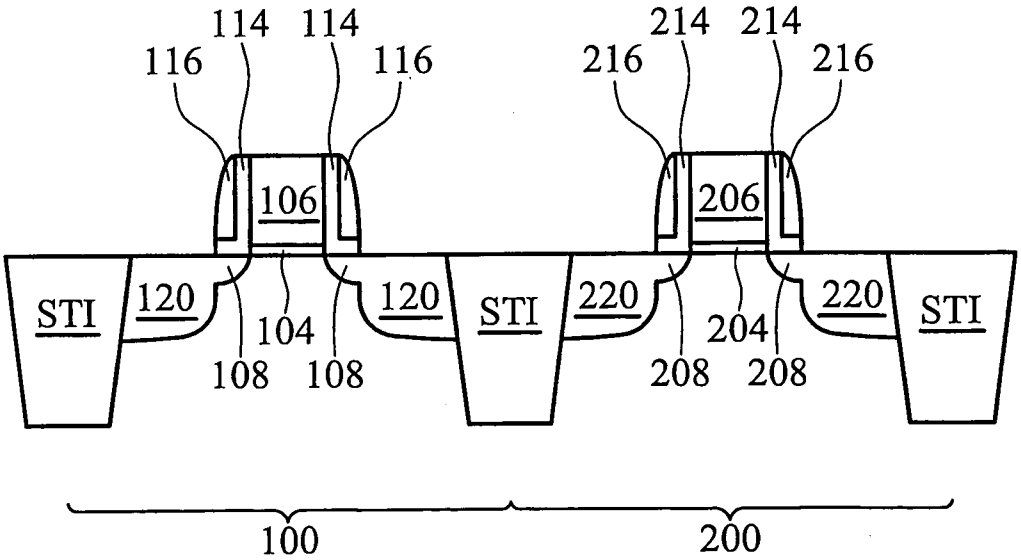
114
114
116
116
214
214
216
216
106
206
STI
120
120
STI
220
220
STI
104
204
108
108
208
208
100
200

FIG. 7A

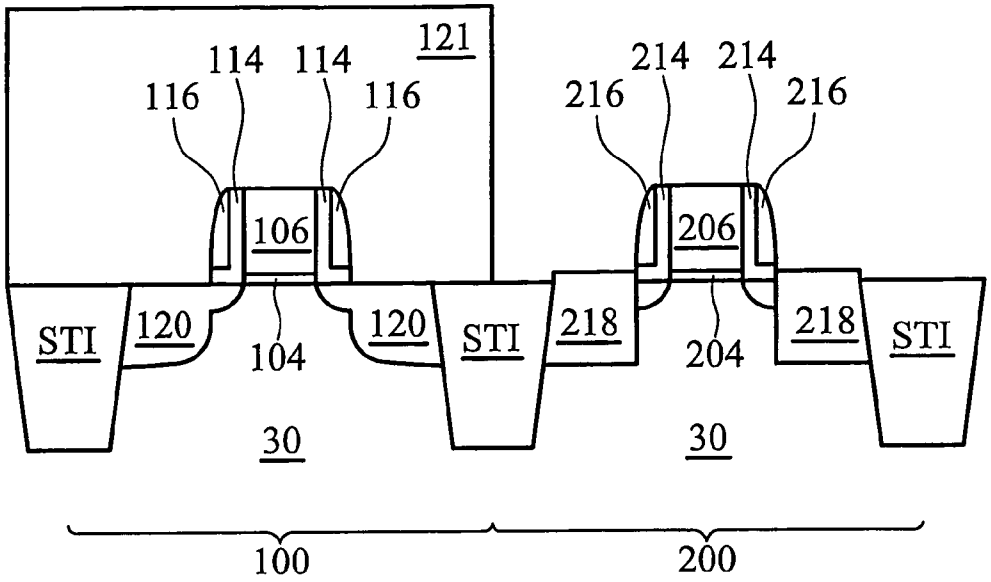
121
114
114
116
116
106
STI
120
104
120
STI
30
214
214
216
216
206
218
204
218
STI
30
100
200

FIG. 7B

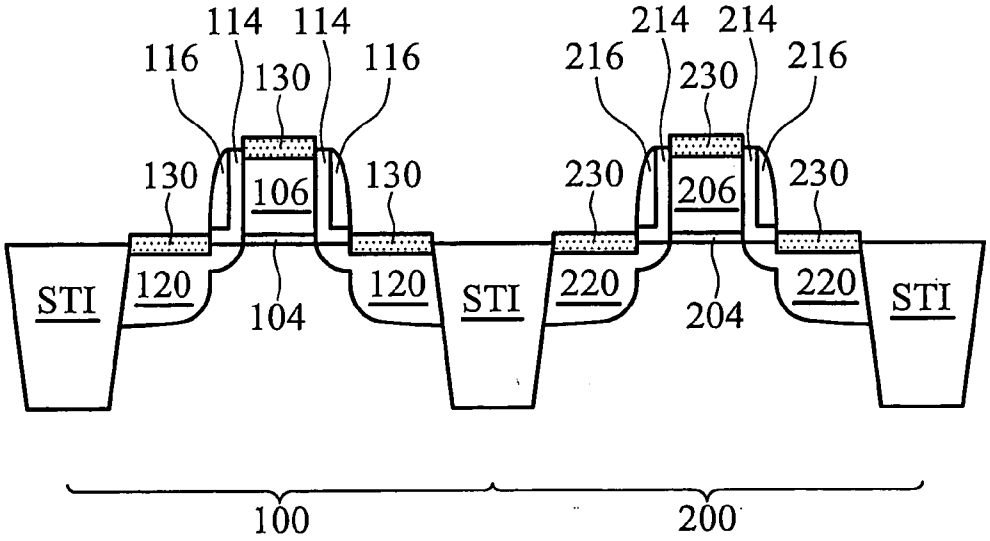
114
114
116
130
116
130
106
130
STI
120
104
120
STI
214
214
216
230
216
230
206
230
220
204
220
STI
100
200

FIG. 8

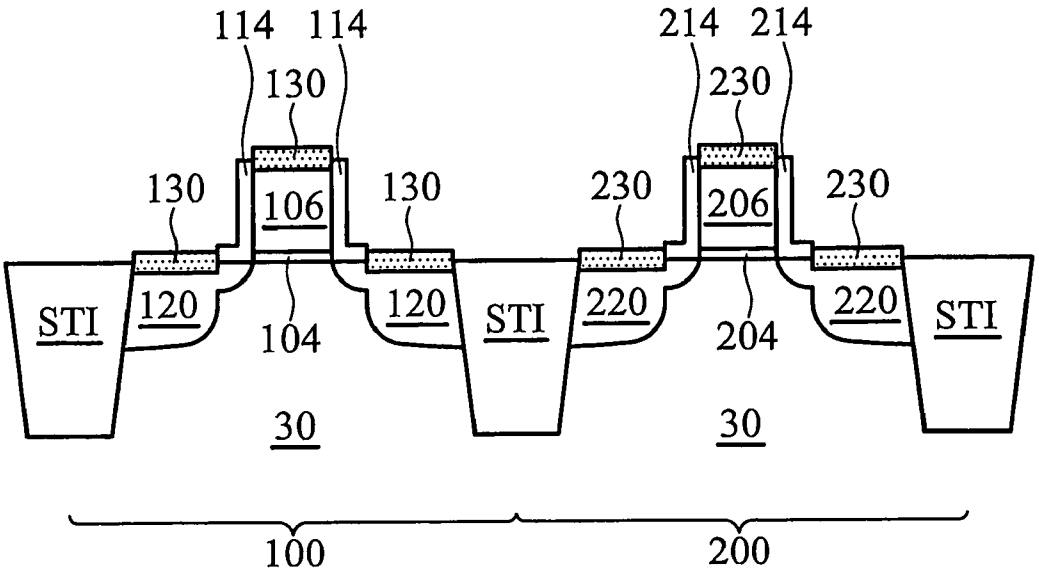
114
114
130
214
214
230
130
106
130
230
206
230
STI
120
104
120
STI
220
204
220
STI
30
30
100
200

FIG. 9

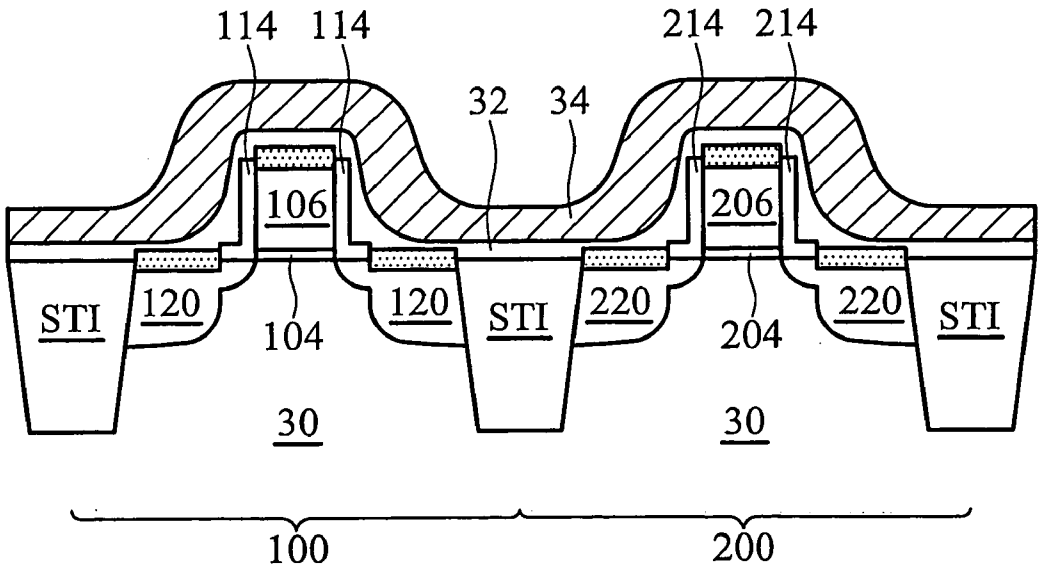
114
114
214
214
32
34
106
206
STI
120
104
120
STI
220
204
220
STI
30
30
100
200

FIG. 10

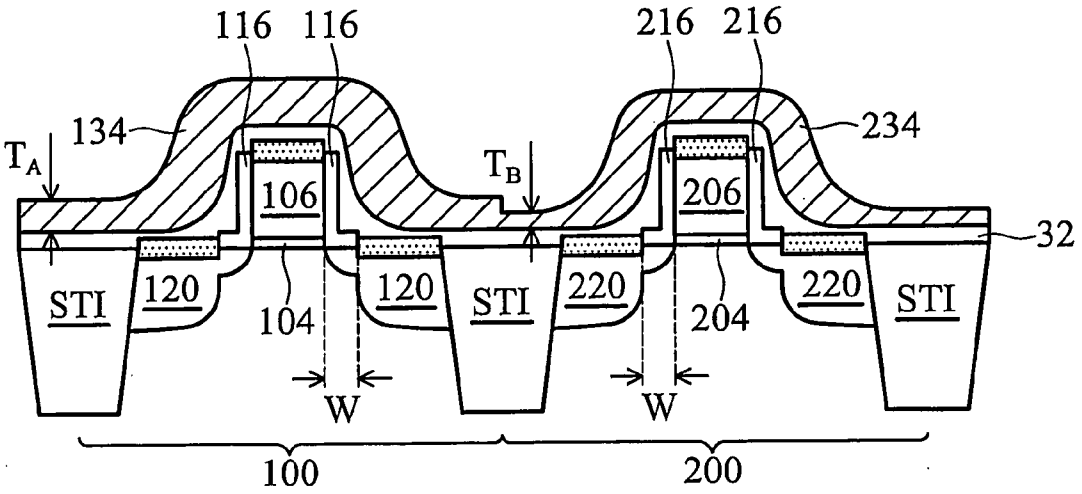

FIG. 11A

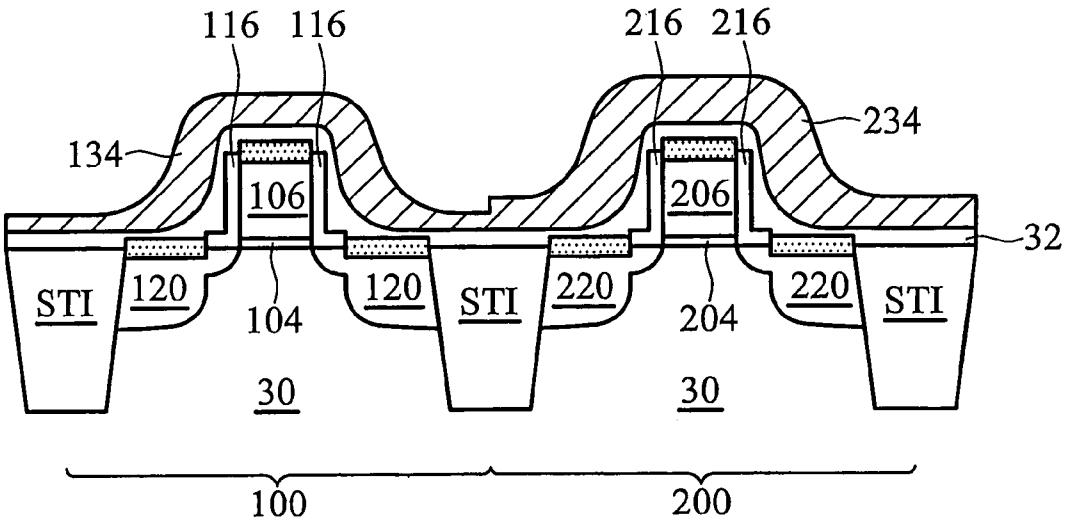

FIG. 11B

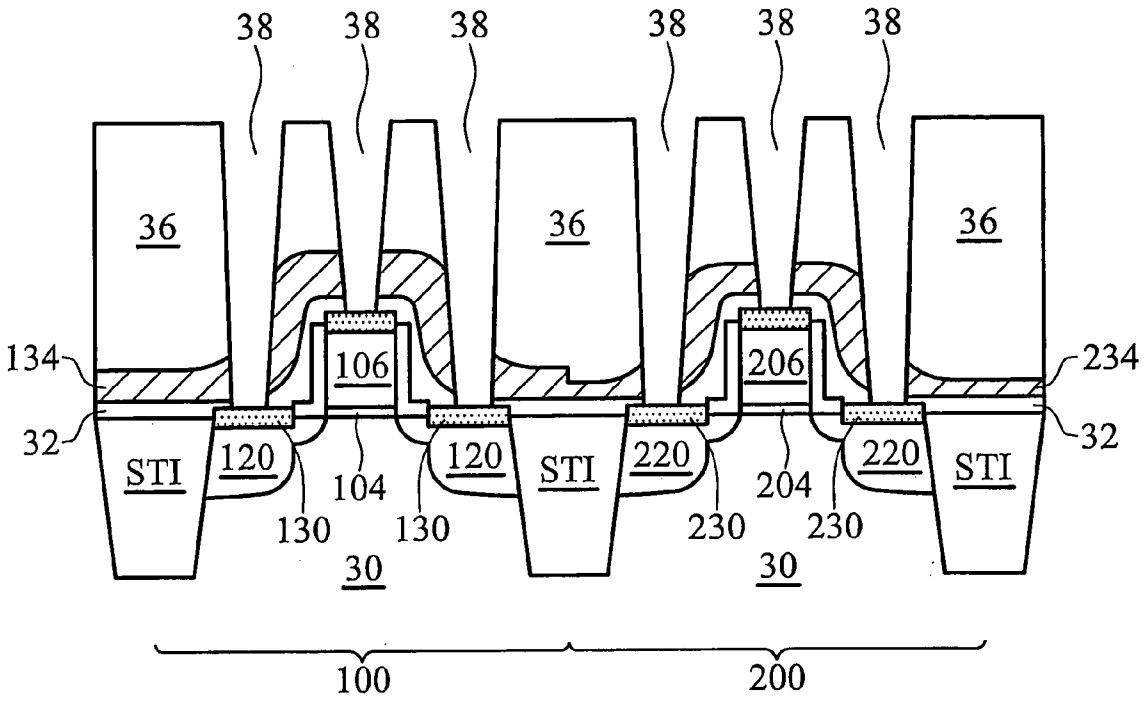
38
38
38
38
38
38
36
36
36
134
106
206
234
32
32
STI
120
120
STI
220
220
STI
104
204
130
130
230
230
30
30
100
200

FIG. 12

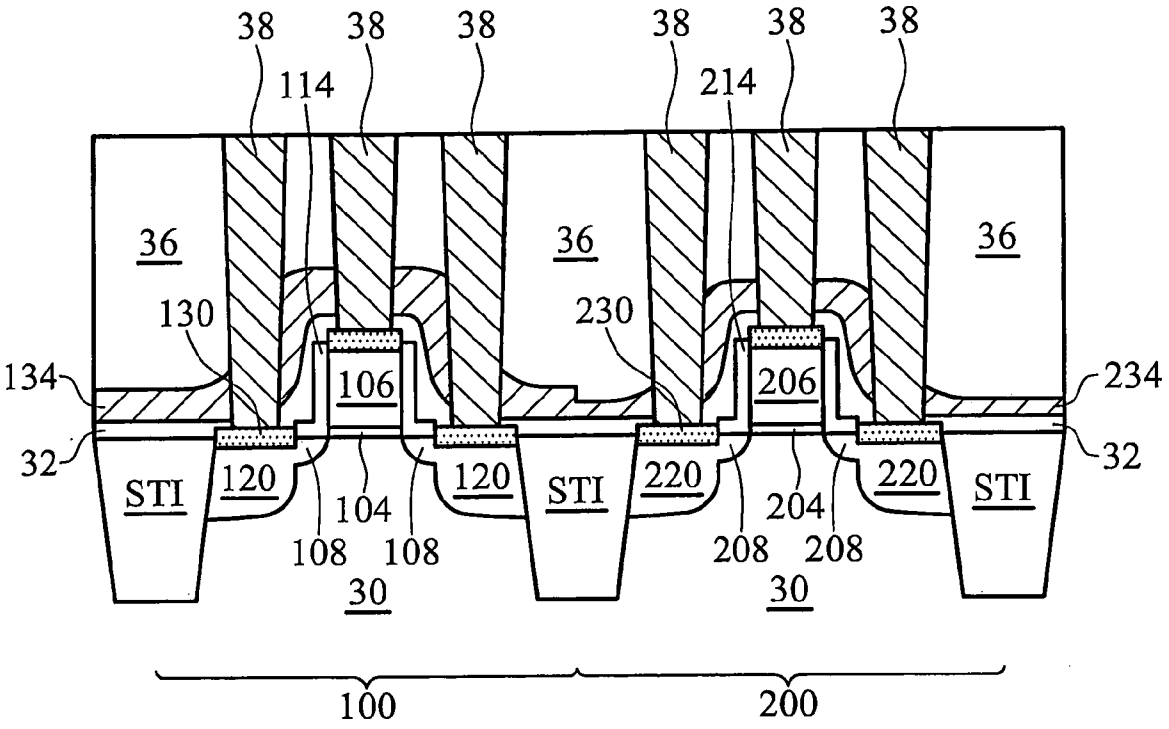
38
38
38
38
38
38
114
214
36
36
36
130
230
134
106
206
234
32
32
STI
120
120
STI
220
220
STI
104
204
108
108
208
208
30
30
100
200

FIG. 13

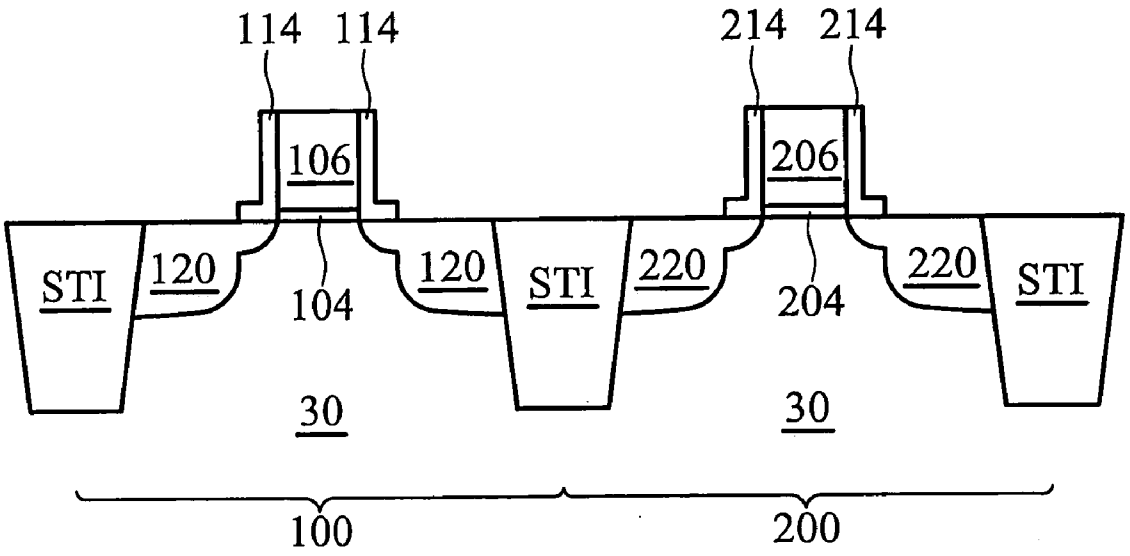
114
114
214
214
106
206
STI
120
104
120
STI
220
204
220
STI
30
30
100
200

FIG. 14

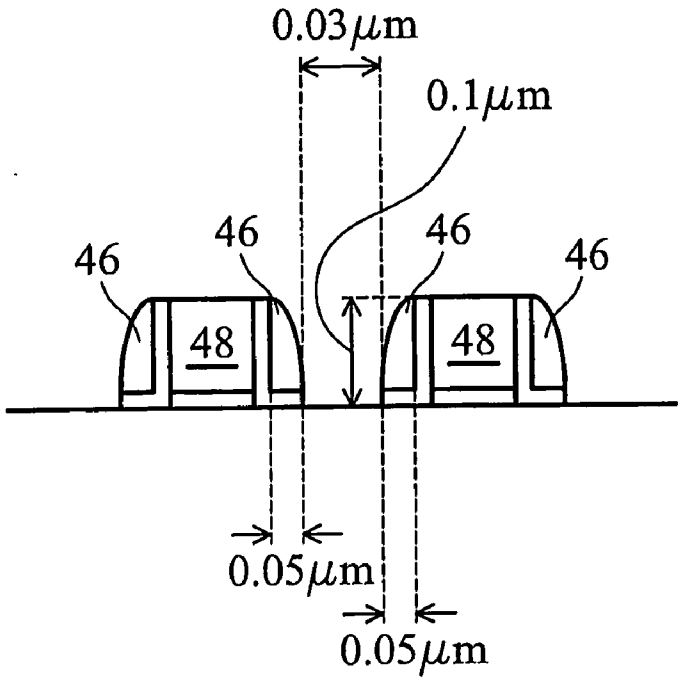

FIG. 15A

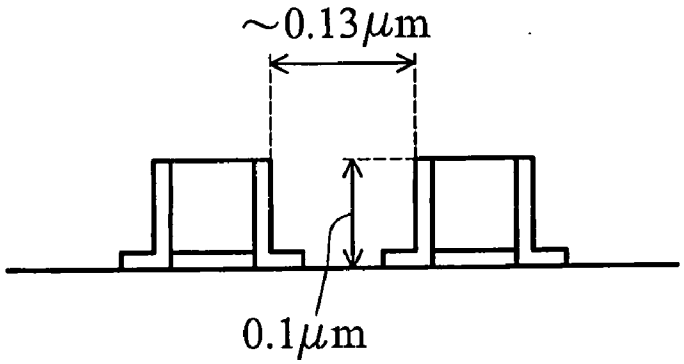

FIG. 15B

CMOS DEVICES WITH IMPROVED GAP-FILLING

TECHNICAL FIELD

[0001] This invention relates generally to semiconductor devices, and more particularly to structures and manufacturing methods of metal-oxide-semiconductor (MOS) devices with improved gap-filling and contact etch process window.

BACKGROUND

[0002] The scaling of VLSI circuits is a constant effort. Smaller integrated circuits allow more devices to be formed in one semiconductor chip. Additionally, power consumption and performance are also improved. With circuits becoming smaller and faster, improvement in device driving current is becoming more important, which can be increased by improving carrier mobility. Among efforts made to enhance carrier mobility, forming a stressed channel region is a known practice. The performance of a MOS device can be enhanced through a stressed-surface channel. This technique allows performance to be improved at a constant gate length without adding complexity to circuit fabrication or design.

[0003] Research has revealed that a bi-axial, in-plane tensile stress field can improve NMOS performance, and a compressive stress parallel to the channel length direction can improve PMOS device performance. A commonly used method for applying stress to the channel region is forming a stressed contact etch stop layer (CESL) on a MOS device. The stressed CESLs introduce stress into the channel region. Therefore, the carrier mobility is improved. Typically, thick CESLs are preferred as thicker CESLs apply greater stresses in the channel regions of MOS devices.

[0004] With the scaling of integrated circuits, however, such a method encounters a problem. When devices become smaller, the distance between devices decreases. The subsequently performed gap-filling and contact etch processes suffer problems accordingly. The gap-filling problem may be explained using FIG. **1**. A gap forms between two neighboring MOS devices **2** and **4**, and the aspect ratio of the gap may be defined as the ratio of height H to width W. With a high aspect ratio for the gap, voids may be formed during the subsequent formation of an inter-layer dielectric layer. The voids may cause difficulty in subsequent processes, and may cause problems, such as short circuits, if the voids are filled with conductive materials.

[0005] A further problem is explained using FIGS. **2**A and **2**B. Referring to FIG. **2**A, two MOS devices **12** and **14** are formed adjacent each other. The gap between MOS devices **12** and **14** has a height H and a width W. A CESL **16** is formed over the MOS devices **12** and **14**. The region **18** between the MOS devices **12** and **14** is available for forming contact plugs (not shown). Since CESL **16** inside region **18** is relatively flat, the subsequent contact-etch process, during which an inter-layer dielectric layer (not shown) and a CESL **16** are etched, is relatively easy.

[0006] If the distance between MOS devices **12** and **14** are decreased, as shown in FIG. **2**B, the width W is also reduced. This causes a narrowing of the region **18**. If a CESL **16** with a same thickness as in FIG. **2**A is formed, the CESL **16** in region **18** will experience great thickness variation. As a result, the subsequent contact-etch process experiences difficulty, and over-etch may occur at one location and under-etching may occur at another. To reduce such an effect, the thickness of the CESL **16** is preferably reduced, which in turn limits the stress applied by CESL **16**.

[0007] A semiconductor device that may overcome the previously discussed deficiencies of the prior art is thus needed.

SUMMARY OF THE INVENTION

[0008] In accordance with one aspect of the present invention, a semiconductor structure includes a substrate including a first region and a second region, a first MOS device in the first region wherein the first MOS device comprises a first spacer liner, and a second MOS device in the second region wherein the second MOS device comprises a second spacer liner. A first stressed film having a first thickness is formed over the first MOS device and directly on the first spacer liner. A second stressed film having a second thickness is formed over the second MOS device and directly on the second spacer liner.

[0009] In accordance with another aspect of the present invention, a ratio of the first thickness to the second thickness is between about 2 and about 25.

[0010] In accordance with yet another aspect of the present invention, the first and the second spacer liners have widths of between about 150 Å and about 800 Å.

[0011] In accordance with yet another aspect of the present invention, the second thickness has a ratio of between about 0.125 and about 7.5 to respective widths of the first and the second spacer liners.

[0012] In accordance with yet another aspect of the present invention, the first and the second stressed films comprise upper portions and lower portions having different materials, wherein the lower portions form a continuous layer.

[0013] In accordance with yet another aspect of the present invention, a method of forming a semiconductor structure includes providing a semiconductor substrate comprising a first region and a second region, forming a first gate stack over the first region and a second gate stack over the second region, forming a first spacer liner on a sidewall of the first gate stack and a second spacer liner on a sidewall of the second gate stack, and forming a contact etch stop layer (CESL) having a first portion over the first region and a second portion over the second region. The CESL is formed directly on the first and the second spacer liners. The first portion has a first thickness substantially greater than a second thickness of the second portion.

[0014] In accordance with yet another aspect of the present invention, a method of forming a semiconductor structure includes providing a semiconductor substrate comprising a first region and a second region, forming a first gate stack over the first region and a second gate stack over the second region, forming a first spacer liner on a sidewall of the first gate stack and a second spacer liner on a sidewall of the second gate stack, and forming a contact etch stop layer (CESL) having a first portion over the first region and a second portion over the second region. The CESL is on the

first and the second spacer liners. The first portion has a first thickness substantially greater than a second thickness of the second portion.

[0015] With the spacers removed, the aspect ratio of the gap between neighboring MOS devices is reduced. Thus, the stresses applied by the CESL can be better applied to the channel regions of the respective MOS devices.

BRIEF DESCRIPTION OF THE DRAWINGS

[0016] For a more complete understanding of the present invention, and the advantages thereof, reference is now made to the following descriptions taken in conjunction with the accompanying drawings, in which:

[0017] FIG. **1** illustrates a void formed in a contact etch stop layer;

[0018] FIGS. **2**A and **2**B illustrate how the etching process window of a contact etch stop layer reduces with the decrease of the distance between two neighboring MOS devices;

[0019] FIG. **3** illustrates stresses in the channel regions of MOS devices as a function of stresses in respective tensile contact etch stop layers;

[0020] FIGS. **4** through **13** are cross-sectional views of intermediate stages in the manufacture of a preferred embodiment;

[0021] FIG. **14** illustrates an intermediate stage in the manufacture of a variation of the preferred embodiment; and

[0022] FIGS. **15**A and **15**B illustrate the improvement in gap-filling by using the preferred embodiment of the present invention.

DETAILED DESCRIPTION OF ILLUSTRATIVE EMBODIMENTS

[0023] The making and using of the presently preferred embodiments are discussed in detail below. It should be appreciated, however, that the present invention provides many applicable inventive concepts that can be embodied in a wide variety of specific contexts. The specific embodiments discussed are merely illustrative of specific ways to make and use the invention, and do not limit the scope of the invention.

[0024] Simulations have been performed to analyze the correlation between channel stress and gate spacers and contact etch stop layers (CESLs). The results are shown in FIG. **3**, wherein channel stresses in the channel length direction are shown as a function of the inherent stresses in CESL layers. Lines **22** and **24** were obtained from MOS devices having spacers with a thickness of about 450 Å, wherein line **22** was obtained from MOS devices with 300 Å CESLs, and line **24** was obtained from MOS devices with 900 Å CESLs. Lines **26** and **28** were obtained from MOS devices with no spacers formed, wherein line **26** was obtained from MOS devices with 300 Å CESLs, and line **28** was obtained from MOS devices with 900 Å CESLs.

[0025] Comparing lines **22** and **24**, it is found that a thicker CESL applies a greater stress to the channel region, as is already known in the art. The same conclusion may be drawn by comparing lines **26** and **28**. Note that line **26** is higher than line **22**, which indicates that when CESL layers have the same thicknesses (300 Å) and same stresses, greater stresses can be imparted to the channel region on MOS devices that have no spacers formed. Similarly, the same conclusion can be drawn by comparing lines **24** and **28**.

[0026] Additionally, the value of line **28** increases in an unexpected scale over lines **22**, **24** and **26**, indicating that a very thin spacer (thickness is zero in this case) combined with a CESL having a great thickness is particularly beneficial for applying stress to the channel.

[0027] Based on the above-discussions, the preferred embodiments of the present invention are provided and illustrated in FIGS. **4** through **13**. Variations of the preferred embodiments are then discussed. Throughout the various views and illustrative embodiments of the present invention, like reference numbers are used to designate like elements.

[0028] FIG. **4** illustrates a substrate **30** comprising two regions, a region **100** for forming an NMOS device and a region **200** for forming a PMOS device. Shallow trench isolation (STI) regions are formed in substrate **30** to isolate device regions **100** and **200**. In the preferred embodiment, device regions **100** and **200** are closely located and adjoined by a STI region in between. In an alternative embodiment, device regions **100** and **200** are not closely located. Substrate **30** is preferably bulk silicon, but other commonly used materials and structures such as SiGe, silicon on insulator (SOI), SiGe on insulator, and strained silicon on insulator can also be used. A gate stack comprising a gate dielectric **104** and a gate electrode **106** is formed in NMOS region **100**. Similarly, a gate stack comprising a gate dielectric **204** and a gate electrode **206** is formed in PMOS region **200**.

[0029] Lightly doped drain/source (LDD) regions **108** and **208** are then formed. Preferably, a photo resist **109** is formed and patterned, masking NMOS region **100**. PMOS region **200** is then implanted with a p-type impurity such as boron, and LDD regions **208** are formed. Photo resist **109** is then removed. Similarly, NMOS region **100** may be implanted with an n-type impurity, forming LDD regions **108**. During the n-type implantation, PMOS region **200** is masked by a photo resist (not shown).

[0030] A dummy layer is then formed over NMOS region **100** and PMOS region **200**, as illustrated in FIG. **5**. In the preferred embodiment, the dummy layer is a composite layer comprising a first sub-layer **110** and a second sub-layer **112**. The sub-layers are preferably formed of materials having different etching characteristics, such as silicon oxide, silicon nitride, silicon oxynitride (SiON), and the like. The formation of the sub-layers may be performed using commonly used techniques, such as plasma enhanced chemical vapor deposition (PECVD), low-pressure chemical vapor deposition (LPCVD), sub-atmospheric chemical vapor deposition (SACVD), etc. In an exemplary embodiment, sub-layer **110** is a liner oxide layer and sub-layer **112** is a nitride layer. Preferably, sub-layer **110** has a thickness of less than about 250 Å, and more preferably between about 30 Å and about 250 Å, and even more preferably between about 30 Å and about 100 Å.

[0031] FIG. **6** illustrates the patterning of sub-layer **110** and sub-layer **112**. Either wet etching or dry etching may be used for patterning. The remaining portions of the sub-layer **110** and sub-layer **112** form spacer liner **114** and spacer **116** in region **100**, and spacer liner **214** and spacer **216** in region

200, respectively. The width W of the spacer liners is preferably between about 150 Å and about 800 Å.

[**0032**] FIG. **7**A illustrates the formation of the source/drain regions **120** and **220**. As is known in the art, source/drain regions **120** and **220** may be recessed in or elevated above the substrate **30** (using, e.g., epitaxially grown regions). In the preferred embodiment, source/drain regions **120** and **220** are formed by implanting impurities into semiconductor substrate **30**. The respective spacers **116** and **216** are used as masks so that the edges of the source/drain regions **120** and **220** are substantially aligned with the respective spacers. Gate electrodes **106** and **206** are preferably implanted simultaneously with the respective source/drain regions to reduce sheet resistance. When region **100** is implanted with an n-type impurity, region **200** is masked by a photo resist (not shown). Similarly, when region **200** is implanted with a p-type impurity, region **100** is masked by a photo resist (not shown).

[**0033**] In alternative embodiments, as shown in FIG. **7**B, SiGe stressors **218** are formed in PMOS region **200**. Preferably, a photo resist **121** is formed covering NMOS region **100**. Recesses are formed in substrate **30** along the outside edges of the spacers **216**, preferably by etching. SiGe stressors **218** are then formed in the recesses. In the preferred embodiment, SiGe stressors **218** are epitaxially grown. P-type impurities such as boron are preferably doped during the epitaxial growth. The photo resist **121** is then removed. After being annealed, SiGe stressors **218** will try to restore their lattice spacing, which is greater than the lattice spacing of the substrate **30**. This introduces compressive stresses in the respective channel regions of the resulting PMOS devices, and the device drive currents of the respective PMOS devices are increased.

[**0034**] FIG. **8** illustrates the structure after the formation of silicide regions **130** and **230**. As is known in the art, silicide regions **130** and **230** may be formed by salicide processes on the respective source/drain regions and gate electrodes. To form a silicide layer, a metal layer is preferably formed by first depositing a thin layer of metal, such as cobalt, nickel, titanium, and the like, over the device. The device is then annealed to form a silicide between the deposited metal and the underlying exposed silicon regions. Un-reacted metal is then removed.

[**0035**] Referring to FIG. **9**, spacers **116** and **216** are removed. Both wet and dry etchings can be used. The removal is preferably performed using an etchant that attacks the spacers **116** and **216**, but not the spacer liners **114** and **214** and silicides **130** and **230**. In the preferred embodiment wherein the spacers **116** and **216** are formed of silicon nitride and spacer liners **114** and **214** are formed of silicon oxide, HF and/or H_3PO_4 can be used to remove spacers **116** and **216**.

[**0036**] Referring to FIG. **10**, a dielectric layer **32** is optionally formed. A contact etch stop layer (CESL) **34** is then formed. Dielectric layer **32** acts as an etch stop layer for CESL **34**, and the reason is discussed in subsequent paragraphs. Preferably, dielectric layer **32** has a thickness of between about 50 Å and about 250 Å, and CESL **34** has a thickness of between about 300_Å and about 1500 Å. According to the type of MOS device to be formed, appropriate materials and correspondent formation processes are selected for CESL **34** to apply either compressive or tensile strain to the channel region of the device. Preferably, the materials of CESL **34** include commonly used materials such as nitride, oxynitride, oxide, SiC, SiON, and combinations thereof. Dielectric layer **32** preferably comprises materials such as oxide, nitride, oxynitride, and the like. More preferably, dielectric layer **32** and CESL **34** comprise different materials having different etching characteristics.

[**0037**] In the preferred embodiment, as shown in FIG. **11**A, CESL **34** in region **200** is thinned, and the remaining portion in regions **100** and **200** are denoted as **134** and **234**, respectively. Preferably, the remaining portion **234** has a thickness of less than about 500 Å, and more preferably between about 50 Å and about 300 Å. A ratio of thickness TA of CESL **134** to thickness TB of CESL **234** is preferably between about 2 and 25, and more preferably between about 3 and 9. A ratio of the thickness TA or TB to the width W of the spacer liners **114** and **214** is preferably between about 0.125 and about 7.5, and more preferably between about 0.3 and 4. In this embodiment, the dielectric layer **32** and CESL **34** preferably have inherent tensile stresses. As a result, a tensile stress is applied to the channel region of the resulting NMOS device, so that the NMOS device is improved. Since PMOS device (region **200**) prefers a compressive stress, the CESL **234** is thinner compared to CESL **134**. Thus less tensile stress is applied by the CESL **234**, and the detrimental effect is reduced. In this embodiment, CESL **134** may be very thick due to its high ratio of its thickness to the thickness of CESL **234**. The removal of spacer **116** (refer to FIG. **8**) makes the thick CESL possible.

[**0038**] In other embodiments, as shown in FIG. **11**B, CESL **34** in region **100** is thinned. In this embodiment, the dielectric layer **32** and CESL **34** preferably have inherent compressive stresses. As a result, a compressive stress is applied to the channel region of the resulting PMOS device, so that the PMOS device is improved. Since NMOS device (region **100**) prefers a tensile stress, CESL **134** is preferably thinner compared to CESL **234**, thus a smaller compressive stress is applied to the channel region of the NMOS device, and the detrimental effect is reduced.

[**0039**] Typically, the performance of PMOS devices can be easily improved with SiGe stressors, while the performance of NMOS devices is relatively difficult to improve, thus the embodiment shown in FIG. **11**A is more preferable.

[**0040**] FIG. **12** illustrates the formation of an inter-layer dielectric (ILD) layer **36** and contacts openings **38**. Since CESLs **134** and **234** may have significantly different thicknesses, the dielectric layer **32** preferably acts as an etch stop layer for etching CESLs **134** and **234**. Dielectric layer **32** is then etched, exposing the underlying silicide regions **130** and **230**. Since dielectric layer **32** is thin, the etch process can be better controlled. Contact openings **38** are then filled with conductive materials, forming contacts **40**. The resulting structure is shown in FIG. **13**.

[**0041**] FIG. **14** illustrates a variation of the preferred embodiment. The initial steps of this embodiment are similar to what is shown in FIGS. **4** through **7**B. After the formation of source/drain regions **120** and **220** but before the formation of silicide regions **130** and **230**, the spacers **116** and **216** are removed using an etchant attacking spacers **116** and **216**, but not spacer liners **114** and **214** and substrate **30**. In an exemplary embodiment, the spacer liners **114** and **214** are formed of silicon oxide and the spacers **116** and **216** are

formed of silicon nitride. Accordingly, spacers **116** and **216** are removed using HF and/or H_3PO_4. After the removal of spacers **116** and **216**, silicide regions **130** and **230** are formed, resulting in a structure shown in FIG. **9**.

[**0042**] The preferred embodiments of the present invention have several advantageous features. An example is shown in FIGS. **15**A and **15**B to explain the improvement of the aspect ratio. Referring to FIG. **15**A, assuming the spacers have a thickness of 0.05 μm, and the spacing between spacers is 0.03 μm, and further assuming the height of the gates is 0.1 μm, the aspect ratio is 0.1/0.03, which is about 3.3. By removing spacers (refer to FIG. **15**B), the spacing is increased to close to 0.13 μm, and the aspect ratio is reduced to 0.8.

[**0043**] The preferred embodiments of the present invention are preferably used in integrated circuits having small spacing, for example, the spacing between the gate electrodes of neighboring MOS devices is less than about 3000 Å. By reducing the aspect ratio, gap-filling is improved and the contact etching process can be better controlled. Additionally, thicker CESLs can be applied without causing difficulty in subsequent processes, so that the performance of devices is improved.

[**0044**] Although the present invention and its advantages have been described in detail, it should be understood that various changes, substitutions and alterations can be made herein without departing from the spirit and scope of the invention as defined by the appended claims. Moreover, the scope of the present application is not intended to be limited to the particular embodiments of the process, machine, manufacture, and composition of matter, means, methods and steps described in the specification. As one of ordinary skill in the art will readily appreciate from the disclosure of the present invention, processes, machines, manufacture, compositions of matter, means, methods, or steps, presently existing or later to be developed, that perform substantially the same function or achieve substantially the same result as the corresponding embodiments described herein may be utilized according to the present invention. Accordingly, the appended claims are intended to include within their scope such processes, machines, manufacture, compositions of matter, means, methods, or steps.

What is claimed is:

1. A semiconductor structure comprising:

a substrate including a first region and a second region;

a first MOS device in the first region, the first MOS device comprising a first spacer liner having an L-shape;

a second MOS device in the second region, the second MOS device comprising a second spacer liner having an L-shape;

a first stressed film having a first thickness over the first MOS device and directly on the first spacer liner; and

a second stressed film having a second thickness over the second MOS device and directly on the second spacer liner.

2. The semiconductor structure of claim 1, wherein the ratio of the first thickness to the second thickness is between about 2 and about 25.

3. The semiconductor structure of claim 1, wherein the first and the second stressed films are over source/drain regions and gate electrodes of the first and the second MOS devices, respectively.

4. The semiconductor structure of claim 1, wherein the first spacer liner and the second spacer liner each have a thickness of between about 30 Å and about 250 Å.

5. The semiconductor structure of claim 1, wherein the first MOS device is an NMOS device and the second MOS device is a PMOS device, and wherein the first and the second stressed films have tensile stresses.

6. The semiconductor structure of claim 1, wherein the first MOS device is a PMOS device and the second MOS device is an NMOS device, and wherein the first and the second stressed films have compressive stresses.

7. The semiconductor structure of claim 1, wherein the first film comprises an upper portion and a lower portion having different materials, and the second film comprises an upper portion and a lower portion having different materials, and wherein the lower portions of the first and the second stressed films form a continuous layer.

8. The semiconductor structure of claim 7, wherein the lower portions of the first and the second stressed films each comprise a material selected from the group consisting essentially of oxide, nitride, oxynitride, and combinations thereof.

9. The semiconductor structure of claim 7, wherein the lower portions of the first and the second stressed films have a thickness of between about 50 Å and about 250 Å.

10. The semiconductor structure of claim 1, wherein the first and the second stressed films are formed of a same material.

11. The semiconductor structure of claim 1, wherein a spacing between vertical portions of the gate electrodes of the first and the second MOS devices is less than about 3000 Å.

12. A semiconductor structure comprising:

a substrate including a first region and a second region;

a first MOS device in the first region, the first MOS device comprising a first spacer liner having an L-Shape;

a second MOS device in the second region, the second MOS device comprising a second spacer liner having an L-shape; and

a stressed film having a first thickness over the first MOS device and a second thickness over the second MOS device, wherein the stressed film is directly on the first and the second spacer liners, and wherein the first and the second spacer liners have widths of between about 150 Å and about 800 Å.

13. The semiconductor structure of claim 12, wherein a ratio of the first thickness to the second thickness is between about 2 and about 25.

14. The semiconductor structure of claim 12, wherein the first and the second spacer liners have a thickness of between about 30 Å and about 250 Å.

15. The semiconductor structure of claim 12, wherein the stressed film comprises an upper portion and a lower portion, and wherein the lower portion has a substantially same thickness on the first and the second MOS devices.

16. The semiconductor structure of claim 12 comprising an isolation region adjoining and separating the first and the second regions.

17. A semiconductor structure comprising:

a substrate including a first region and a second region;

an NMOS device in the first region, the NMOS device comprising a first spacer liner;

a PMOS device in the second region, the PMOS device comprising a second spacer liner;

a dielectric layer over the NMOS and PMOS devices; and

a stressed film over the NMOS device and the PMOS device and directly on the first and second spacer liners, wherein the stressed film has a first thickness overlying the NMOS device and a second thickness substantially greater than the first thickness overlying the PMOS device, and wherein the first thickness and the second thickness have a ratio of between about 0.125 and about 7.5 to respective widths of the first and the second spacer liners.

18. The semiconductor structure of claim 17, wherein the stressed film has an inherent tensile stress and wherein the first thickness is greater than the second thickness.

19. The semiconductor structure of claim 17, wherein the stressed film has an inherent compressive stress and wherein the second thickness is greater than the first thickness.

20. The semiconductor structure of claim 17, wherein the stressed film comprises a material selected from the group consisting essentially of oxide, nitride, oxynitride, and combinations thereof.

21. The semiconductor structure of claim 17 further comprising an isolation region adjoining and separating the first and the second regions.

22. A method of forming a semiconductor structure, the method comprising:

providing a semiconductor substrate comprising a first region and a second region;

forming a first gate stack over the first region and a second gate stack over the second region;

forming a first spacer liner having an L-shape on a sidewall of the first gate stack and a second spacer liner having an L-shape on a sidewall of the second gate stack; and

forming a contact etch stop layer (CESL) having a first portion over the first region and a second portion over the second region, wherein the CESL is directly on the first and the second spacer liners, and wherein the first portion has a first thickness substantially greater than a second thickness of the second portion.

23. The method of claim 22 further comprising forming an isolation region in the semiconductor substrate and adjoining the first and the second regions.

24. The method of claim 22, wherein the step of forming the CESL comprises:

blanket forming a CESL; and

thinning a portion of the CESL over the second region.

25. The method of claim 22, wherein the step of forming the first and the second spacer liners further comprises:

blanket forming a spacer liner layer;

blanket forming a spacer layer on the spacer liner layer;

patterning the spacer liner layer to form the first and the second spacer liners;

patterning the spacer layer to form a first spacer over the first spacer liner and a second spacer over the second spacer liner; and

removing the first and the second spacers.

26. The method of claim 22 wherein the step of forming the CESL comprises forming a first sub-layer and a second sub-layer comprising a different material from the first sub-layer.

27. A method of forming a semiconductor structure, the method comprising:

providing a semiconductor substrate comprising a first region and a second region;

forming a first gate stack over the first region and a second gate stack over the second region;

forming a first spacer liner on a sidewall of the first gate stack;

forming a second spacer liner on a sidewall of the second gate stack;

forming a first spacer on a horizontal leg of the first spacer liner;

forming a second spacer on a horizontal leg of the second spacer liner;

removing the first and the second spacers;

forming silicide regions on source/drain regions;

forming a CESL over the first and the second regions; and

partially thinning a portion of the CESL over the second region.

28. The method of claim 27 further comprising forming a dielectric layer over the first and the second regions and on the first and the second spacer liners before the step of forming the CESL, wherein the dielectric layer comprises a different material from the CESL.

29. The method of claim 28 wherein the dielectric layer has a thickness of between about 50 Å and about 250 Å.

30. The method of claim 27, wherein the first and the second spacers are removed before the step of forming the silicide regions.

31. The method of claim 27, wherein the first and the second spacers are removed after the step of forming the silicide regions.

32. The method of claim 27, wherein the CESL over the first region has a first thickness, a remaining portion of the CESL over the second portion has a second thickness, and wherein the first thickness and the second thickness have a ratio of between about 2 and about 25.

33. The method of claim 27, wherein source/drain regions in the first region are of n-type, the source/drain regions in the second region are of p-type, and wherein the CESL has an inherent tensile stress.

34. The method of claim 27, wherein the first and the second spacer liners have a thickness of between about 30 Å and about 250 Å and a width of between about 150 Å and about 800 Å.

* * * * *