US006849511B2

(12) **United States Patent**
Iriyama et al.

(10) **Patent No.: US 6,849,511 B2**
(45) **Date of Patent: Feb. 1, 2005**

(54) **SEMICONDUCTOR DEVICE AND METHOD FOR FABRICATING THE SAME INCLUDING INTERCONNECTION OF TWO ELECTRODES**

(75) Inventors: **Yasunori Iriyama**, Kawasaki (JP); **Tetsuo Izawa**, Kawasaki (JP)

(73) Assignee: **Fujitsu Limited**, Kawasaki (JP)

(*) Notice: Subject to any disclaimer, the term of this patent is extended or adjusted under 35 U.S.C. 154(b) by 0 days.

(21) Appl. No.: **10/819,230**

(22) Filed: **Apr. 7, 2004**

(65) **Prior Publication Data**

US 2004/0188726 A1 Sep. 30, 2004

Related U.S. Application Data

(62) Division of application No. 10/219,281, filed on Aug. 16, 2002, now Pat. No. 6,784,472, which is a continuation of application No. PCT/JP00/01838, filed on Mar. 24, 2000.

(51) **Int. Cl.**[7] **H01L 21/8234**; H01L 21/336; H01L 21/3205

(52) **U.S. Cl.** **438/275**; 438/197; 438/287; 438/585

(58) **Field of Search** 438/275, 195, 438/197, 287, 585, 592

(56) **References Cited**

U.S. PATENT DOCUMENTS

5,391,510	A *	2/1995	Hsu et al.	438/301
5,677,249	A	10/1997	Fukui et al.	438/128
6,140,688	A *	10/2000	Gardner et al.	257/412
6,171,910	B1	1/2001	Hobbs et al.	438/275
6,255,698	B1 *	7/2001	Gardner et al.	257/369
6,284,578	B1	9/2001	Ni	438/176
6,303,418	B1	10/2001	Cha et al.	438/199
6,333,223	B1	12/2001	Moriwaki et al.	438/241
6,333,527	B2	12/2001	Kim	257/288
6,346,438	B1	2/2002	Yagishita et al.	438/197
6,406,956	B1 *	6/2002	Tsai et al.	438/201
6,613,621	B2	9/2003	Uh et al.	438/183
6,696,333	B1 *	2/2004	Zheng et al.	438/230
6,699,776	B2 *	3/2004	Matsuoka et al.	438/585

FOREIGN PATENT DOCUMENTS

JP	8-31931	2/1996
JP	9-321151	12/1997
JP	10-189914	7/1998
JP	10-189966	7/1998
JP	11-54509	2/1999
JP	11-74368	3/1999
JP	11-74369	3/1999
JP	11-243065	9/1999
JP	11-243150	9/1999

OTHER PUBLICATIONS

International Electron Device Meeting, "Technical Digest," 1998 pp. 777–780.

* cited by examiner

Primary Examiner—Richard Booth
Assistant Examiner—Ron Pompey
(74) *Attorney, Agent, or Firm*—Westerman, Hattori, Daniels & Adrian, LLP

(57) **ABSTRACT**

A semiconductor device comprises a first transistor **38***a* having a first gate electrode **22**; a second transistor **38***b* having a second gate electrode **34** which is different from the first gate electrode; an insulation film **28** formed between the first gate electrode and the second gate electrode; and an interconnection electrode **44** buried in a concavity **42** formed in the first gate electrode, the second gate electrode and the insulation film and electrically interconnecting the first gate electrode and the second gate electrode. The interconnection electrode is buried in the concavity formed in the first gate electrode, the second gate electrode and the insulation film, and the interconnection electrodes electrically interconnects the first gate electrode and the second gate electrode, whereby the semiconductor device can have high integration and can be reliable.

6 Claims, 28 Drawing Sheets

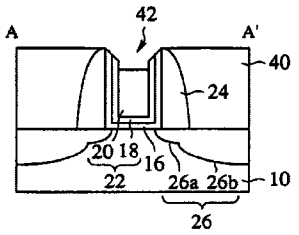

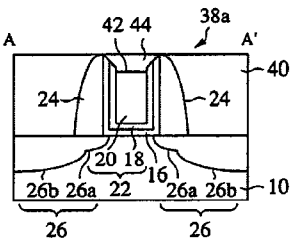

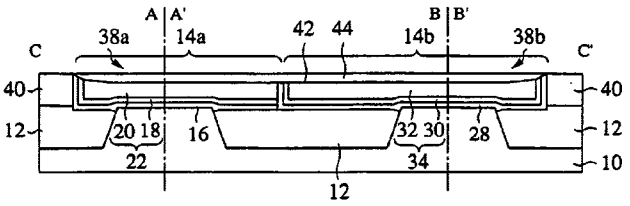

FIG. 1A

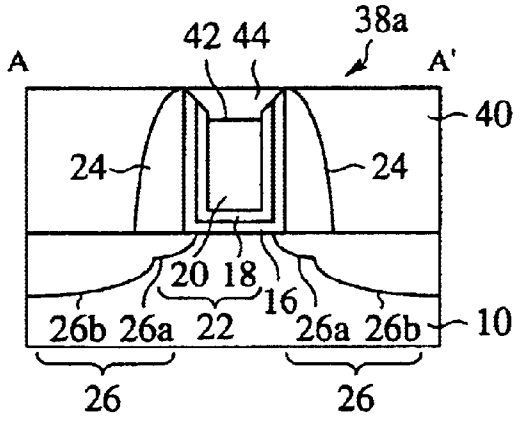

FIG. 1B

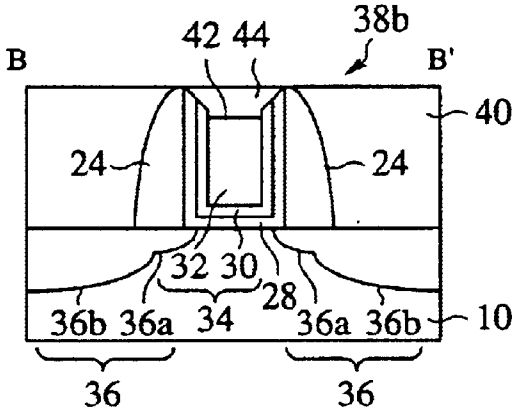

FIG. 1C

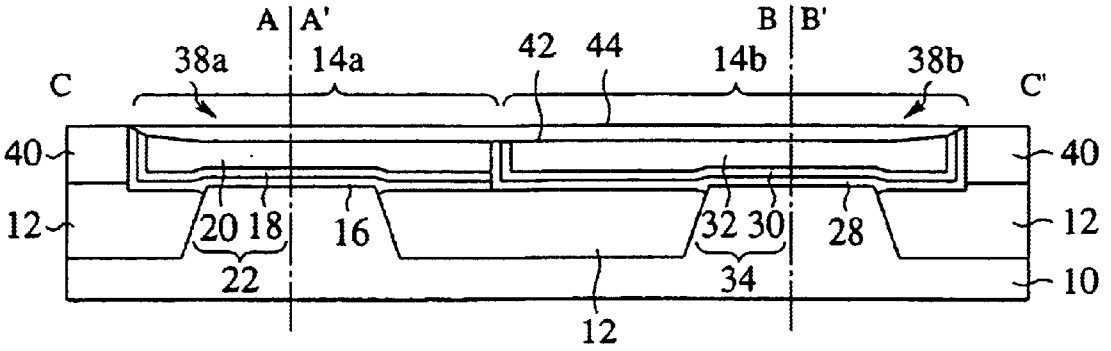

FIG. 2

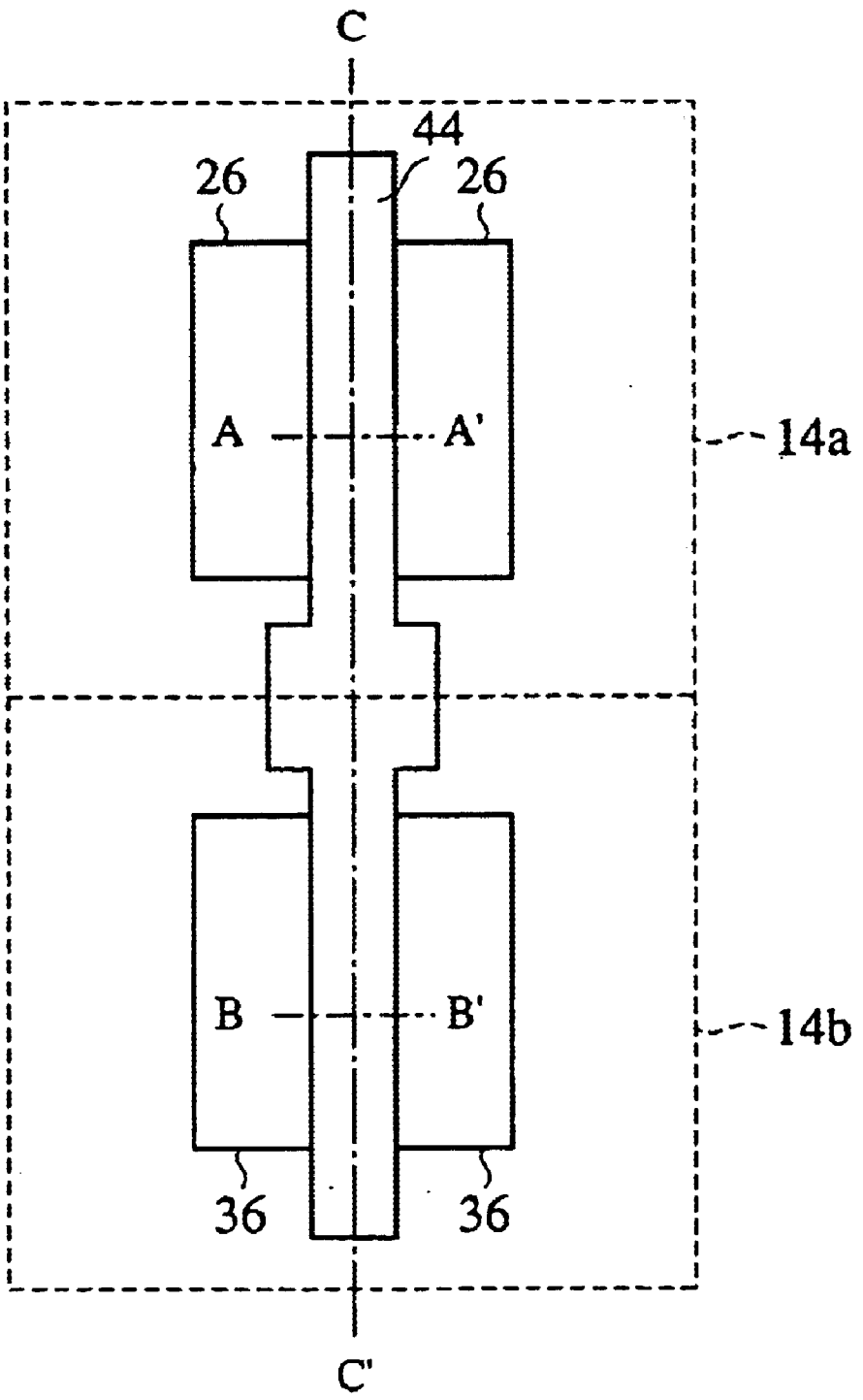

FIG. 3A

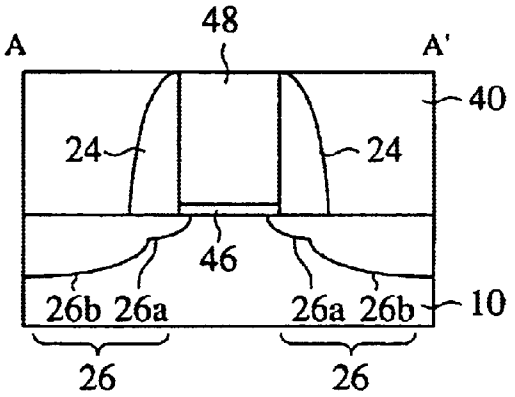

FIG. 3B

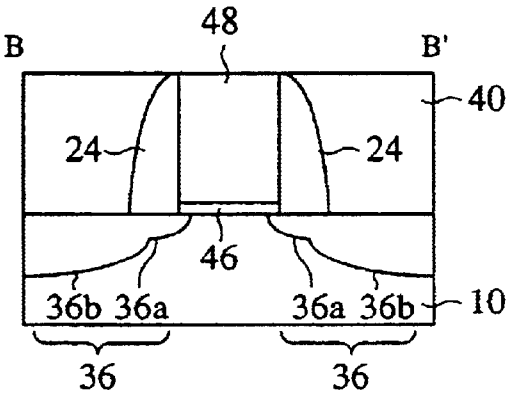

FIG. 3C

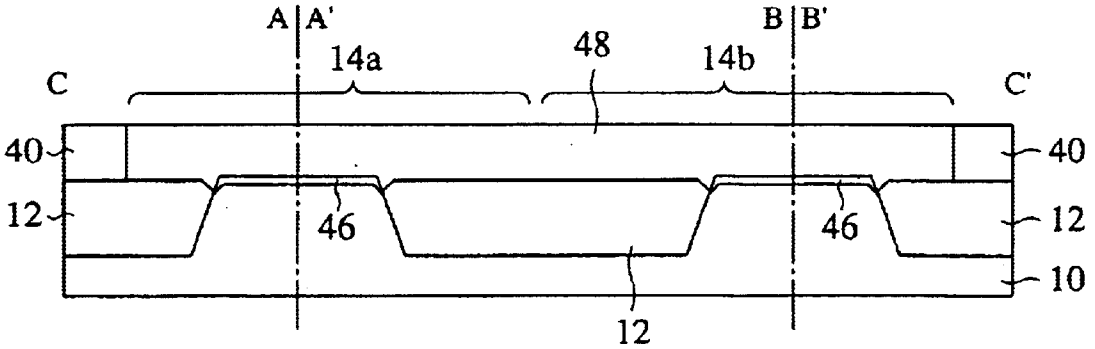

FIG. 4A

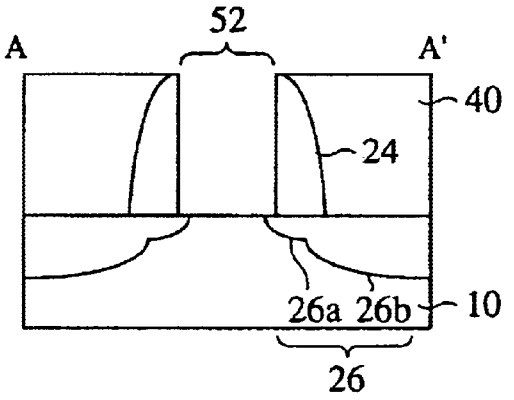

FIG. 4B

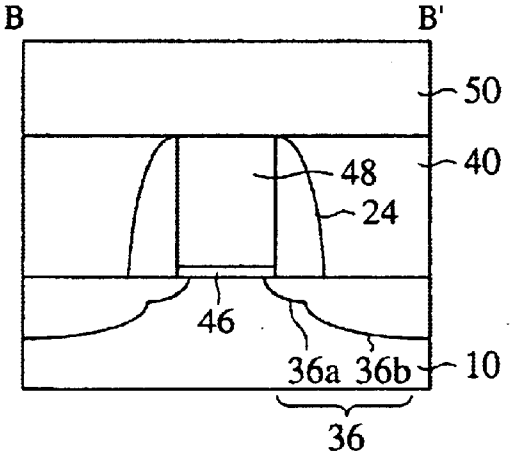

FIG. 4C

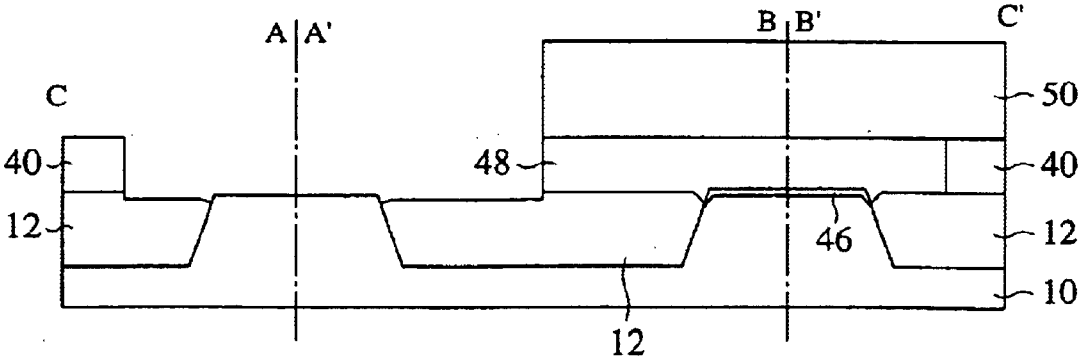

FIG. 5A

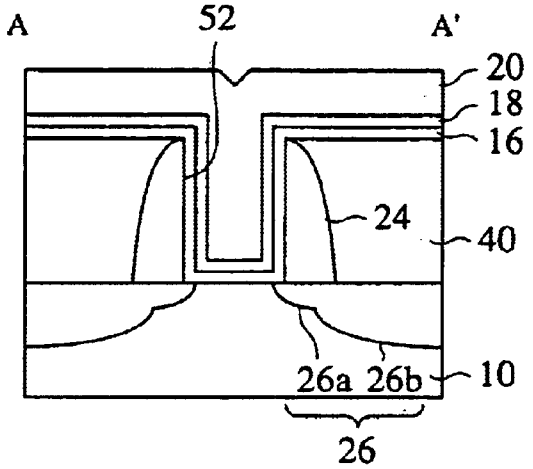

FIG. 5B

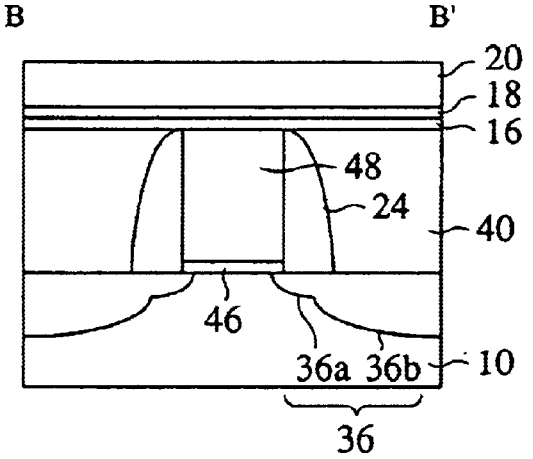

FIG. 5C

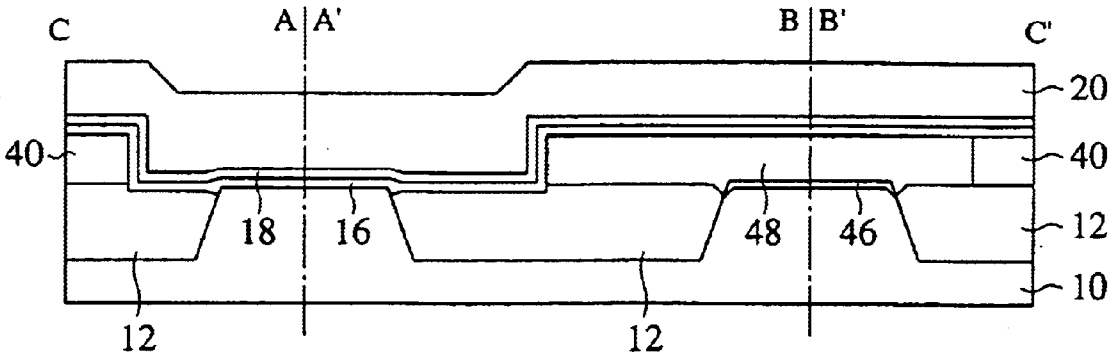

FIG. 6A

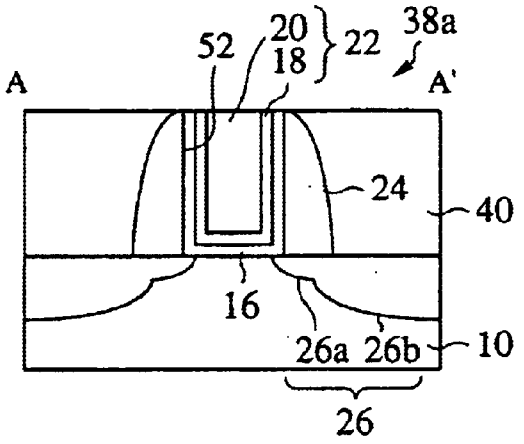

FIG. 6B

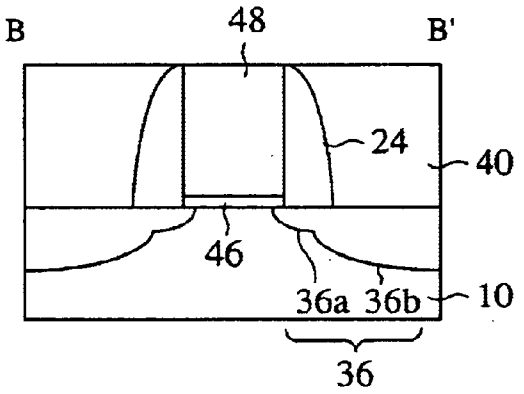

FIG. 6C

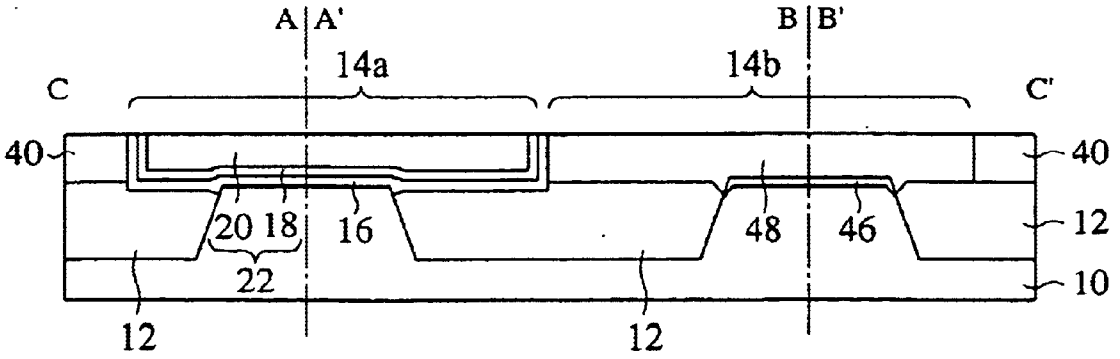

FIG. 7A

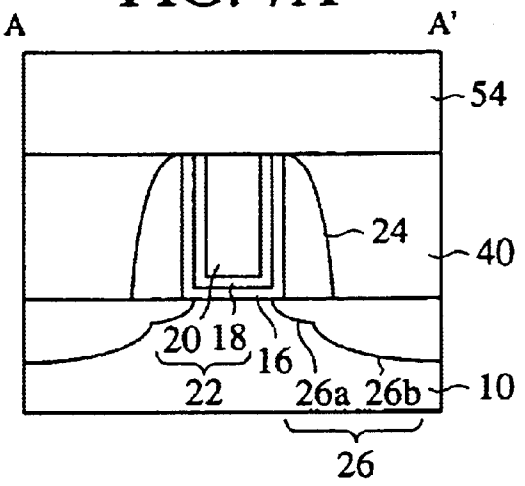

FIG. 7B

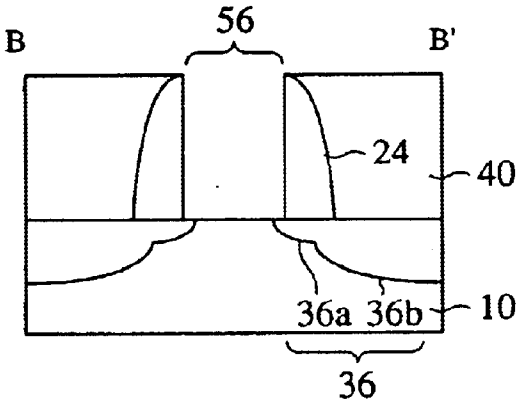

FIG. 7C

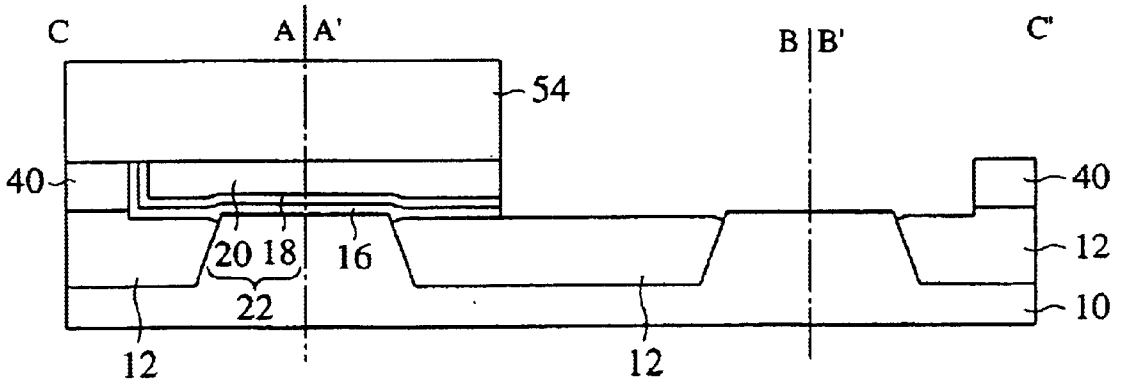

FIG. 8A

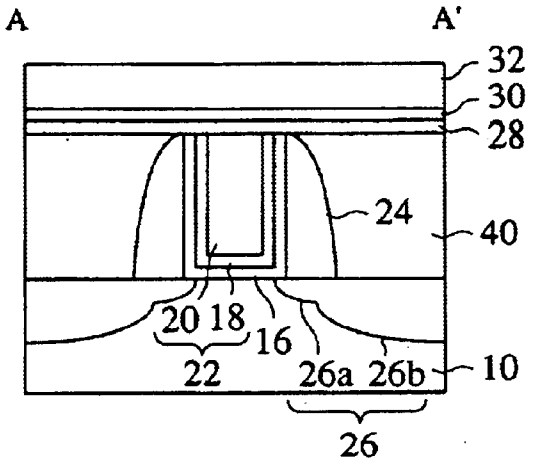

FIG. 8B

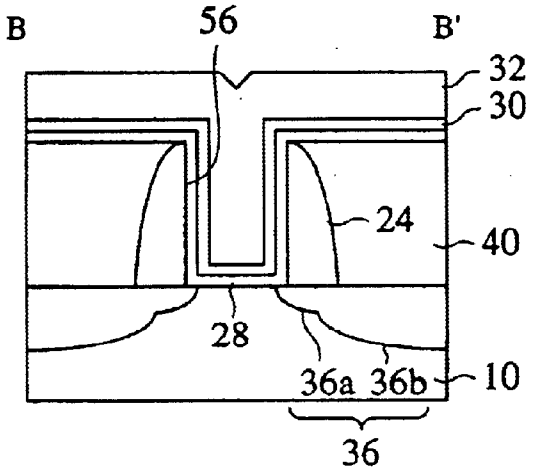

FIG. 8C

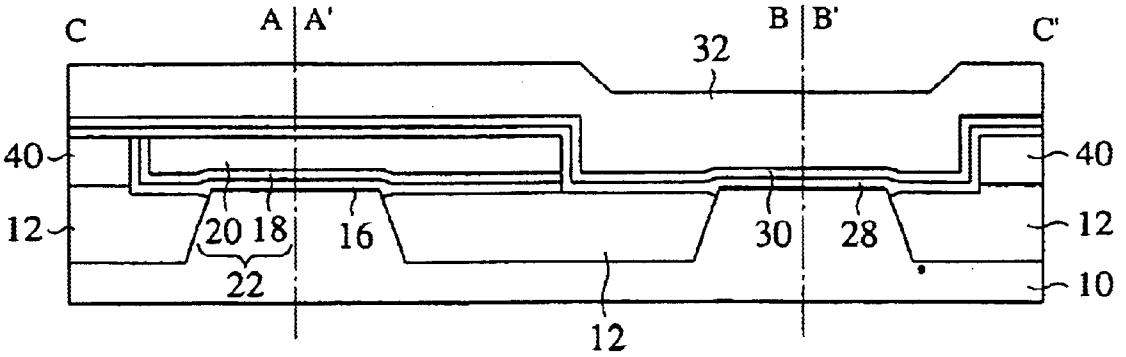

FIG. 9A

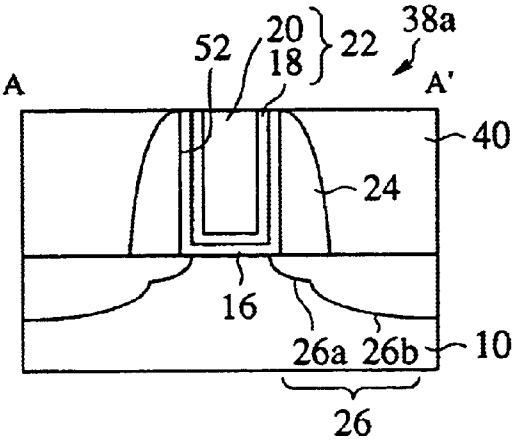

FIG. 9B

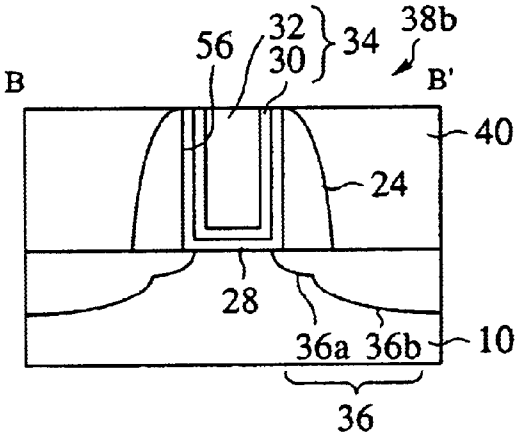

FIG. 9C

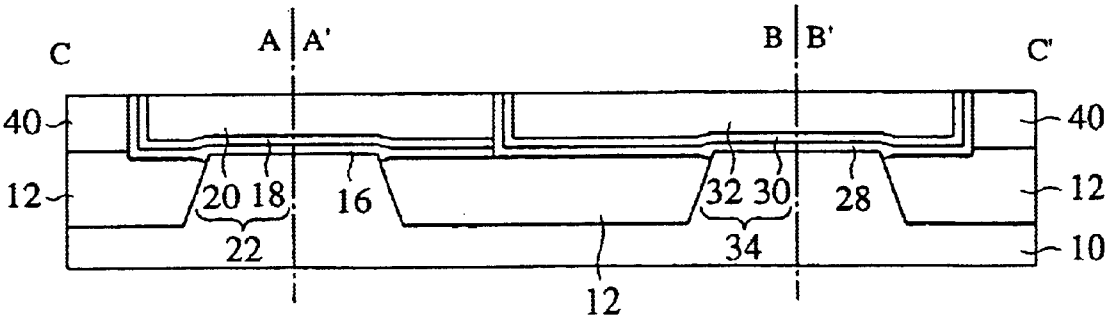

FIG. 10A

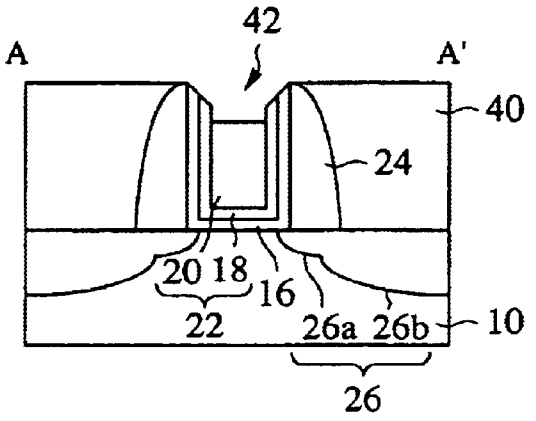

FIG. 10B

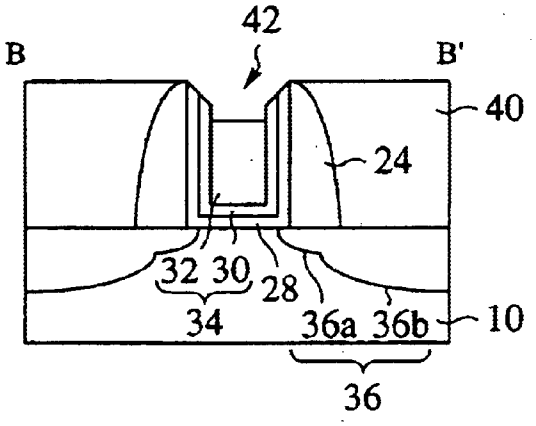

FIG. 10C

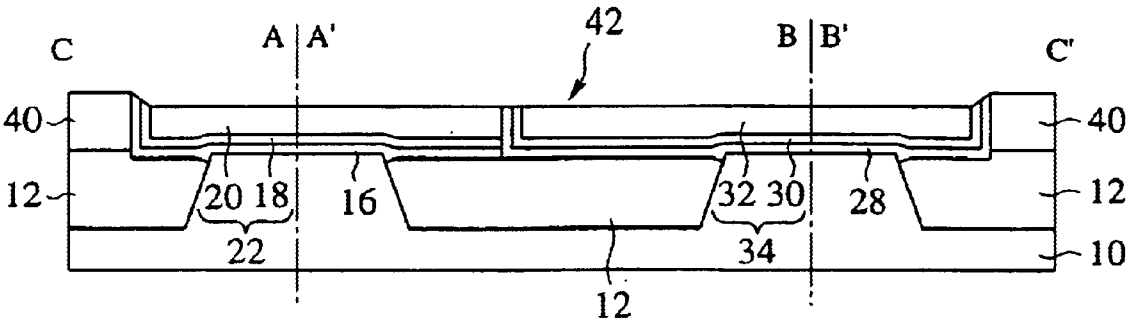

FIG. 11A

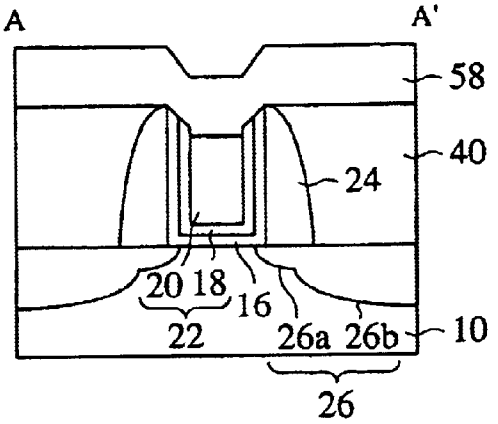

FIG. 11B

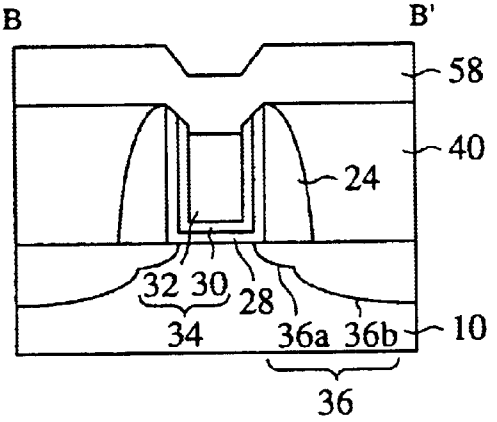

FIG. 11C

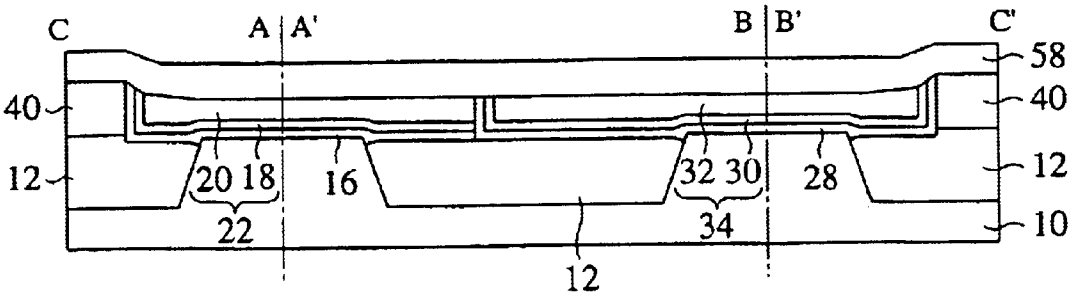

FIG. 12A

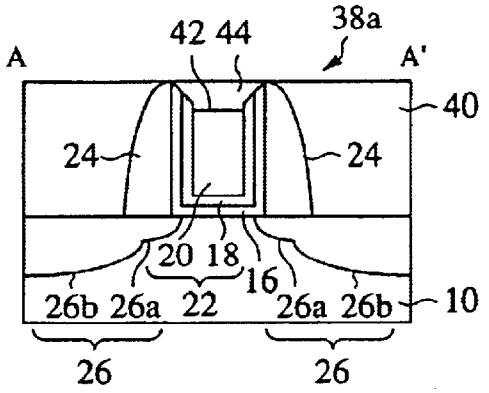

FIG. 12B

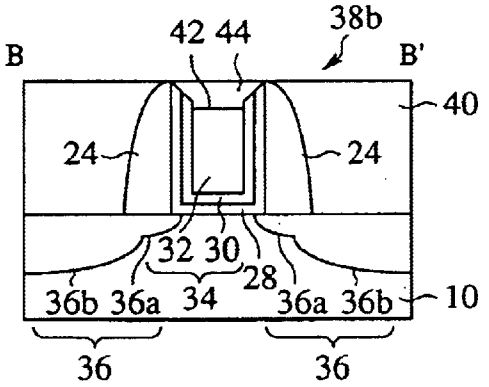

FIG. 12C

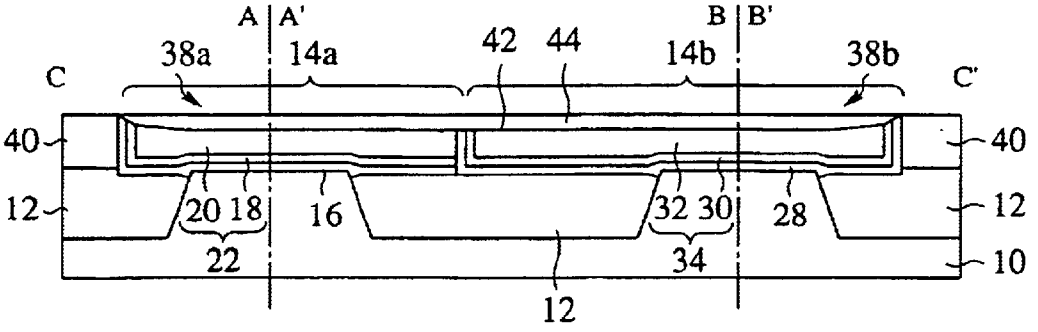

FIG. 13A

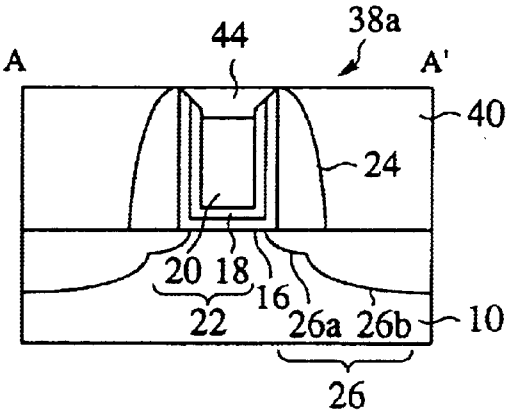

FIG. 13B

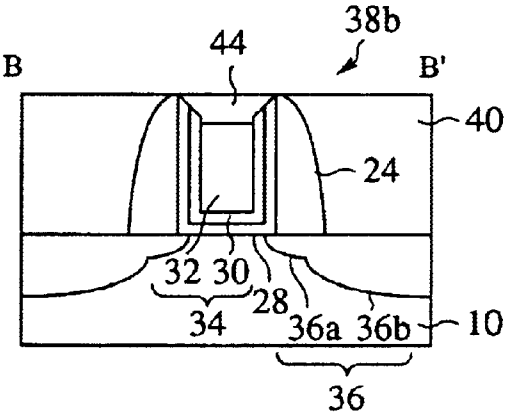

FIG. 13C

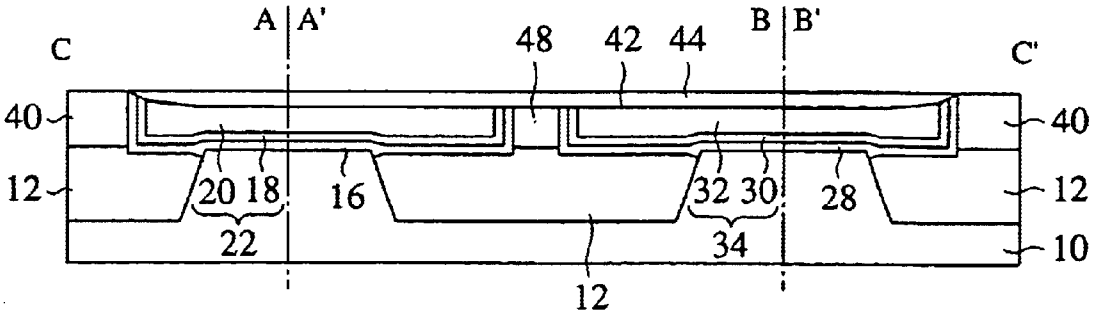

FIG. 14A

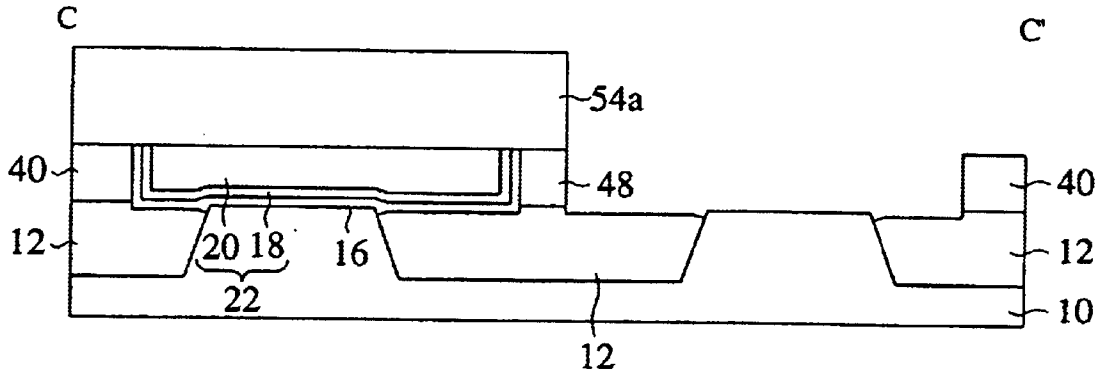

FIG. 14B

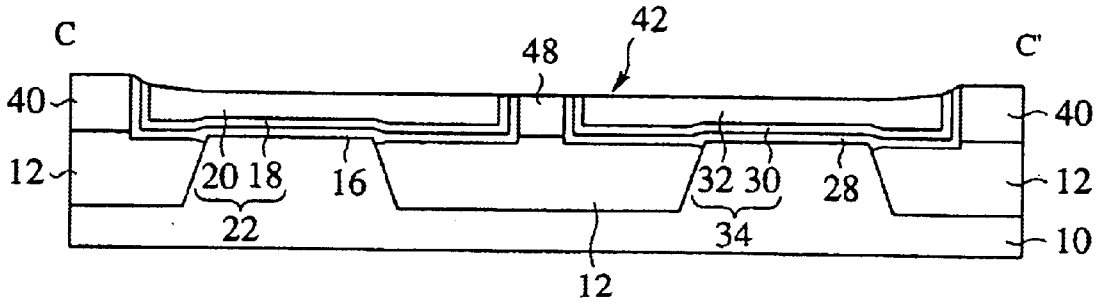

FIG. 14C

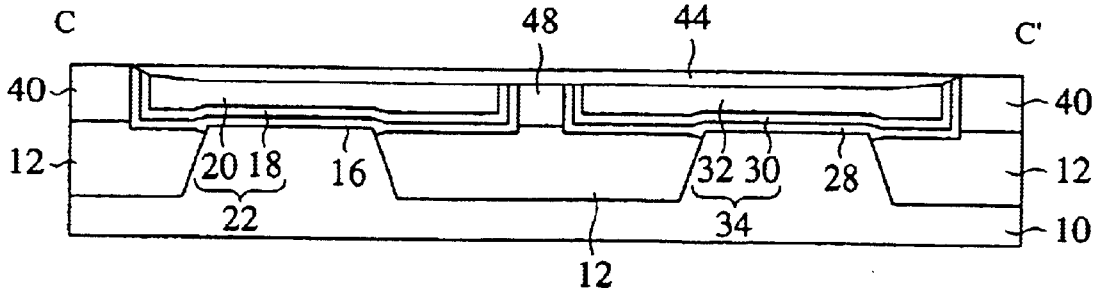

FIG. 15A

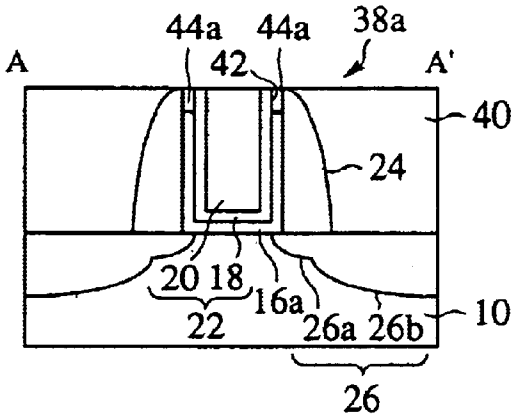

FIG. 15B

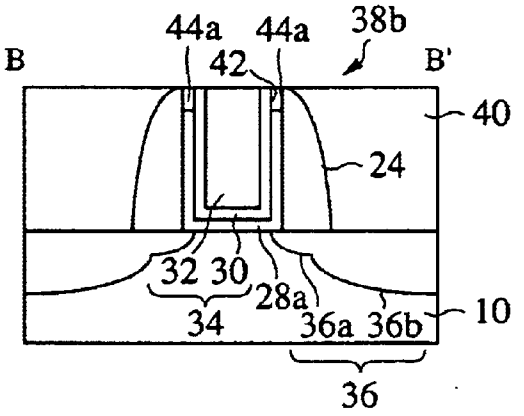

FIG. 15C

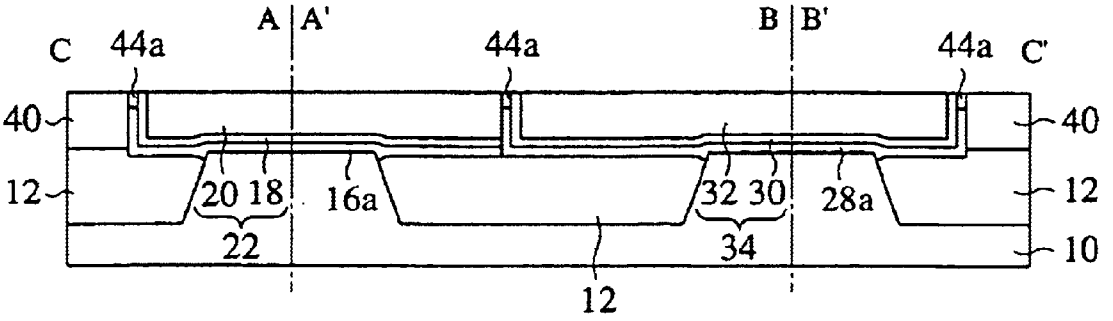

FIG. 16A

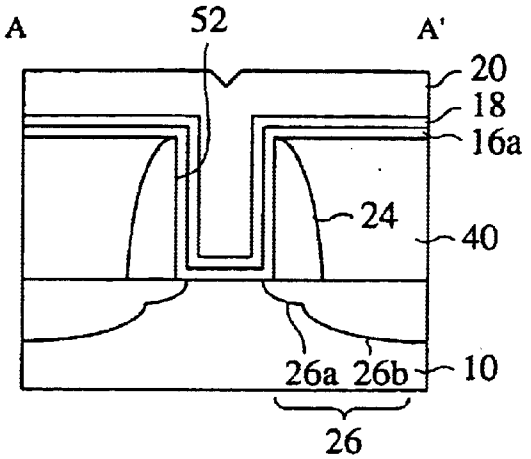

FIG. 16B

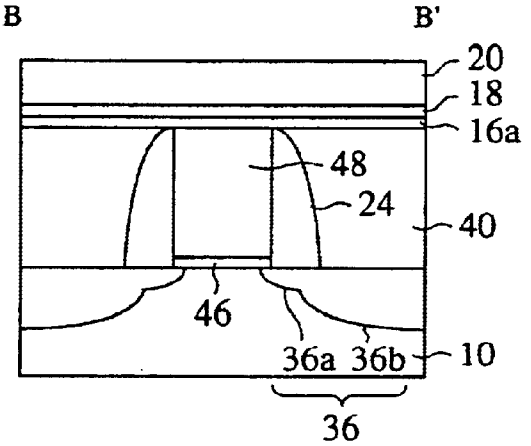

FIG. 16C

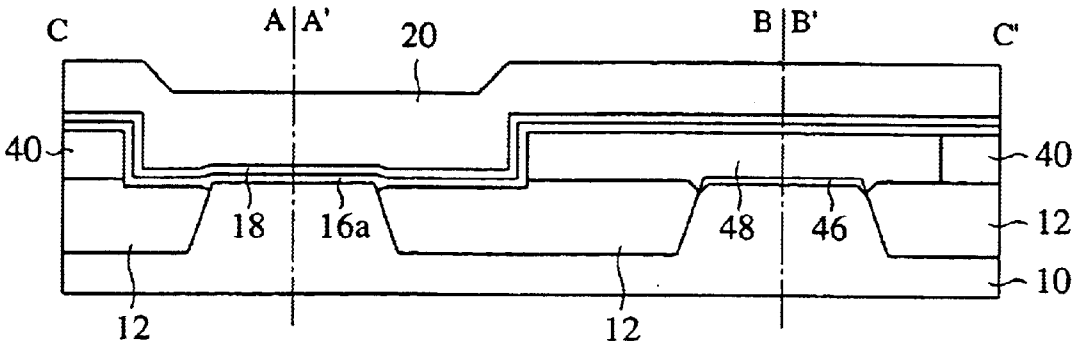

FIG. 17A

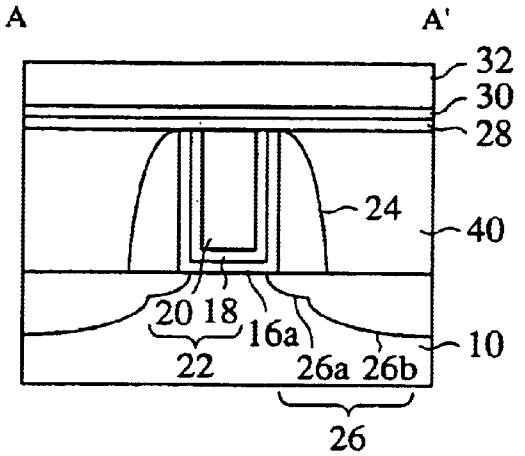

FIG. 17B

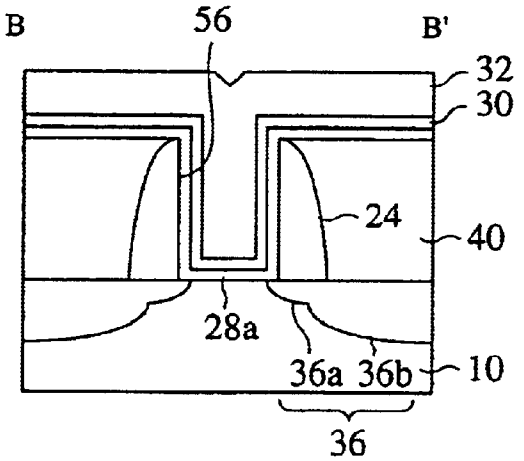

FIG. 17C

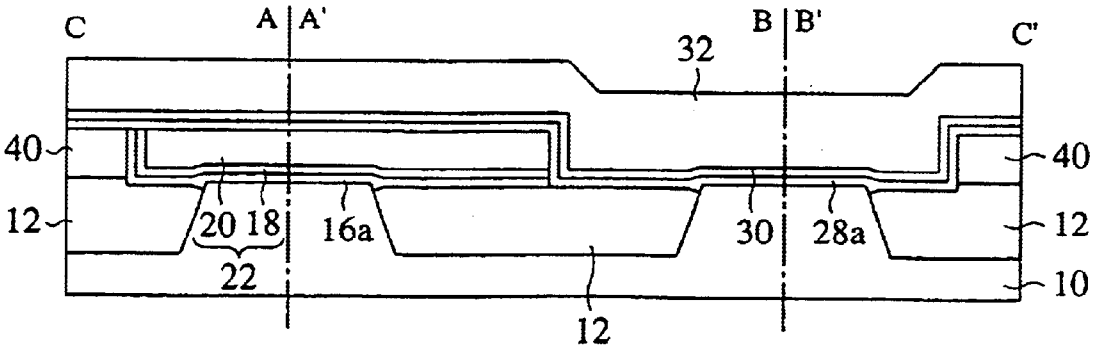

FIG. 18A

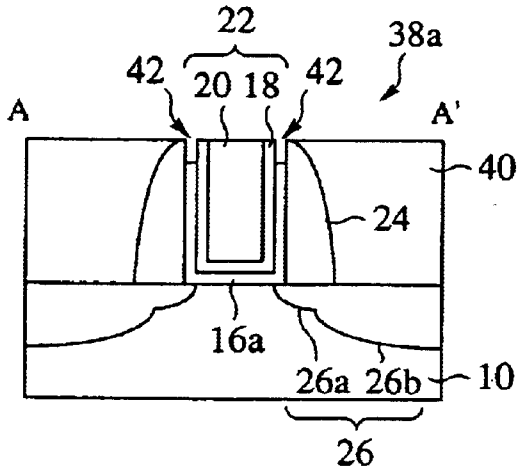

FIG. 18B

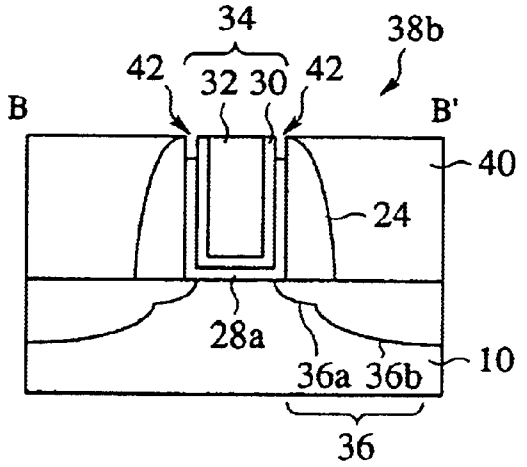

FIG. 18C

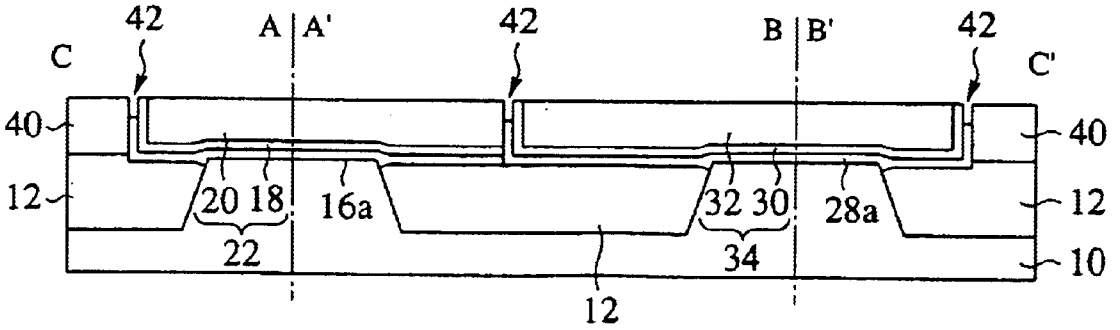

FIG. 19A

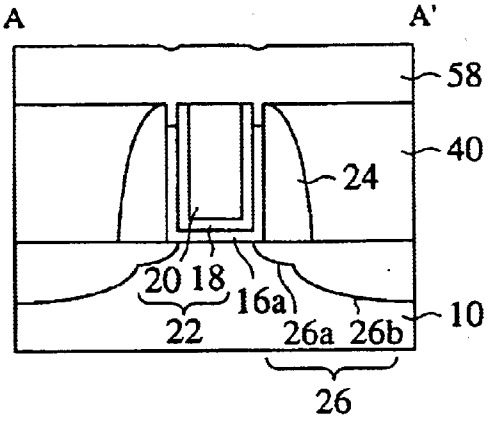

FIG. 19B

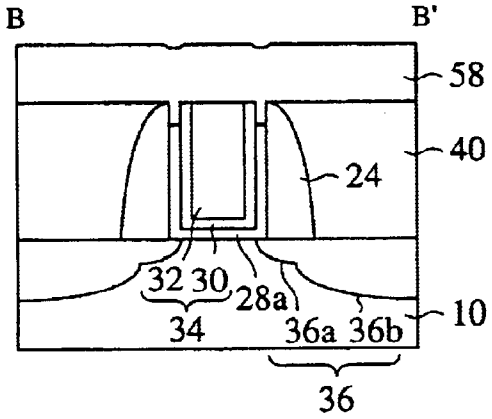

FIG. 19C

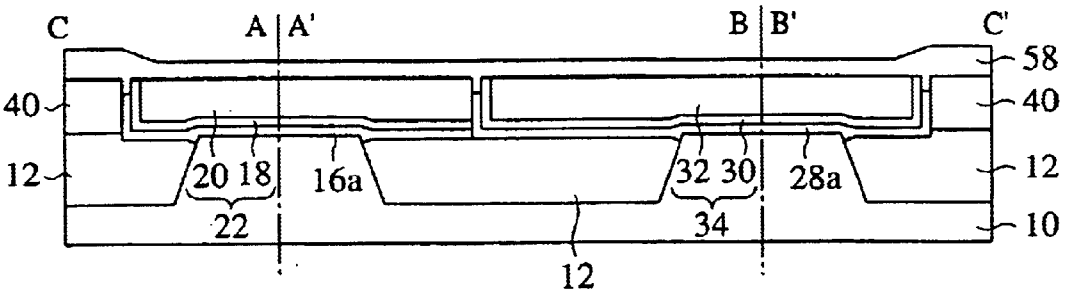

FIG. 20A

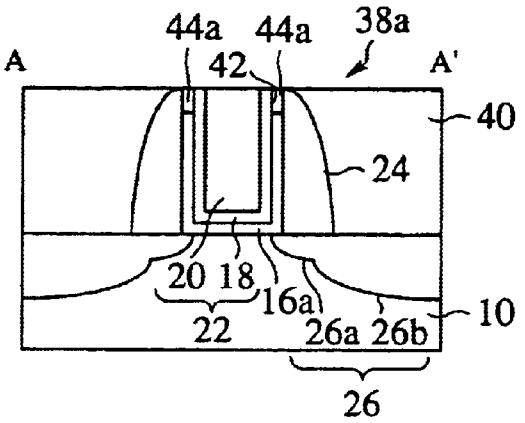

FIG. 20B

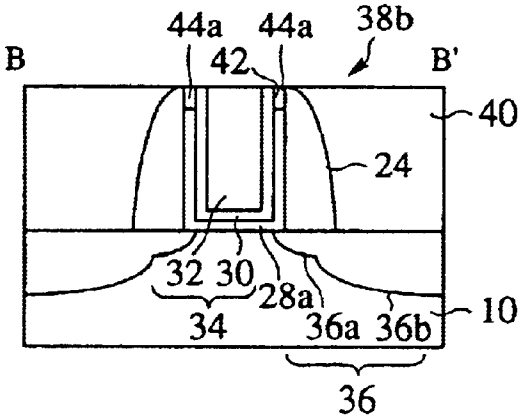

FIG. 20C

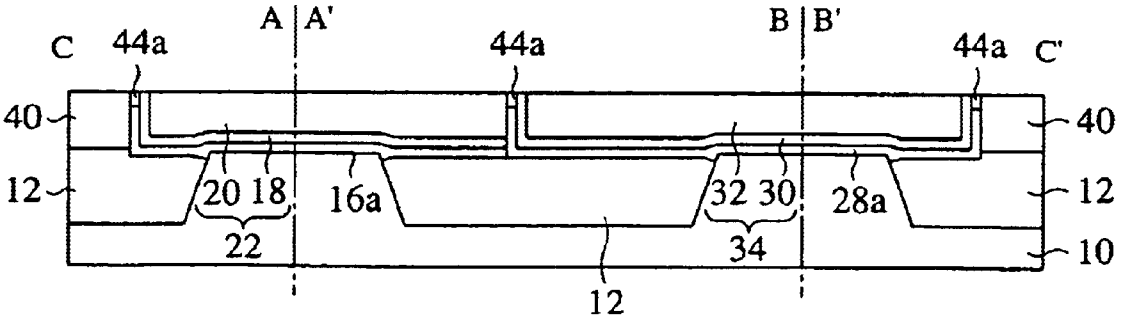

FIG. 21

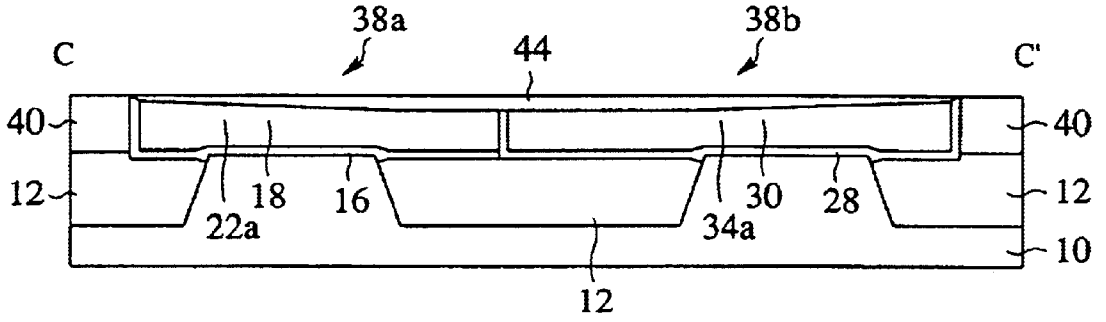

FIG. 22

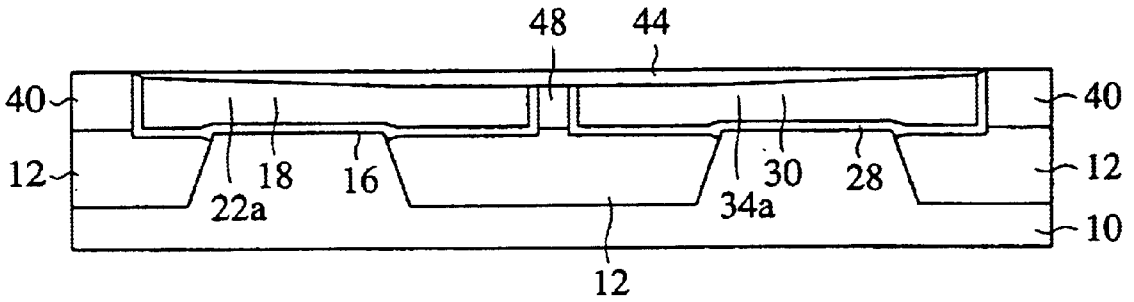

FIG. 23

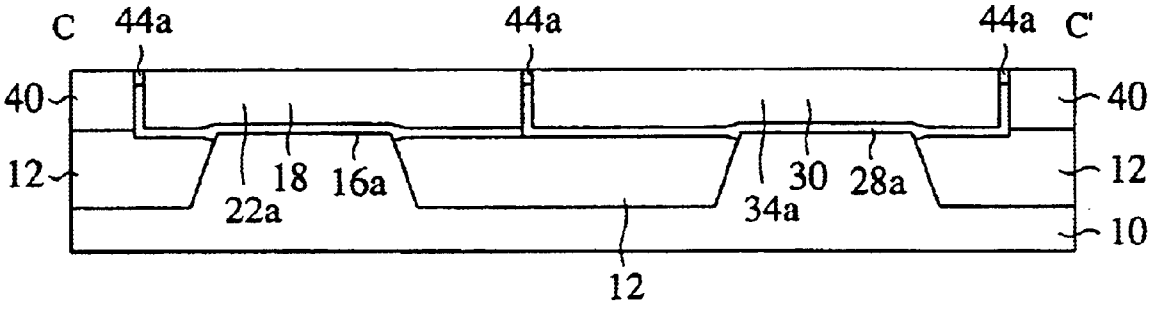

"PRIOR ART"

FIG. 24A

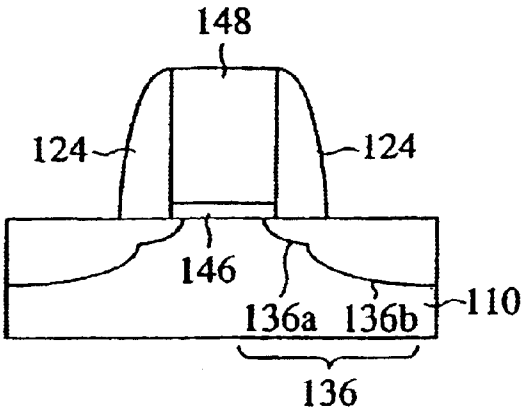

"PRIOR ART"

FIG. 24B

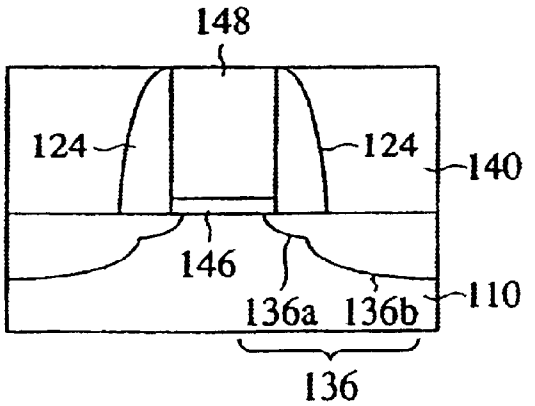

"PRIOR ART"

FIG. 24C

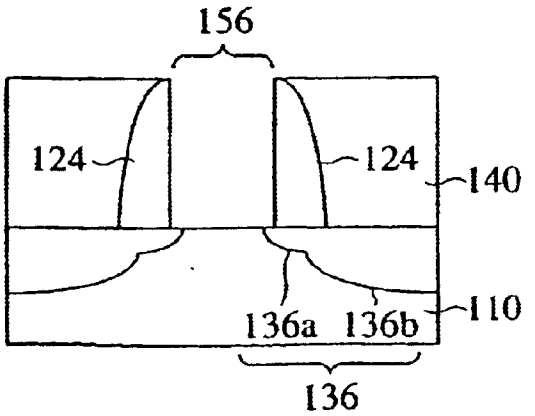

"PRIOR ART"

FIG. 25A

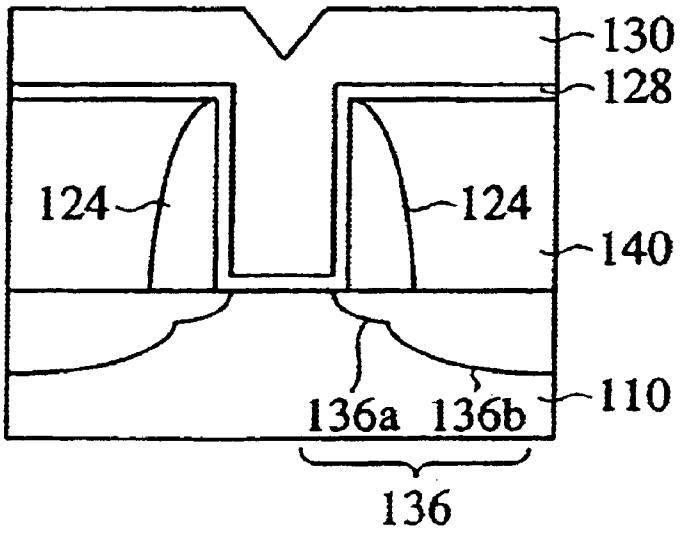

"PRIOR ART"

FIG. 25B

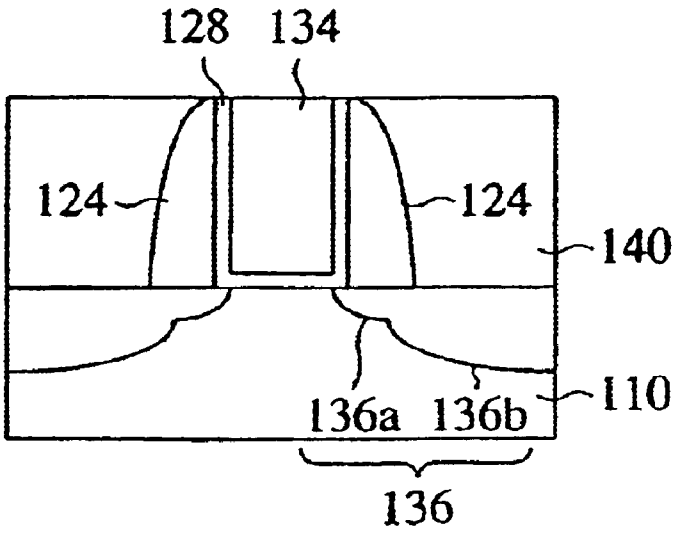

"RELATED ART"

FIG. 26

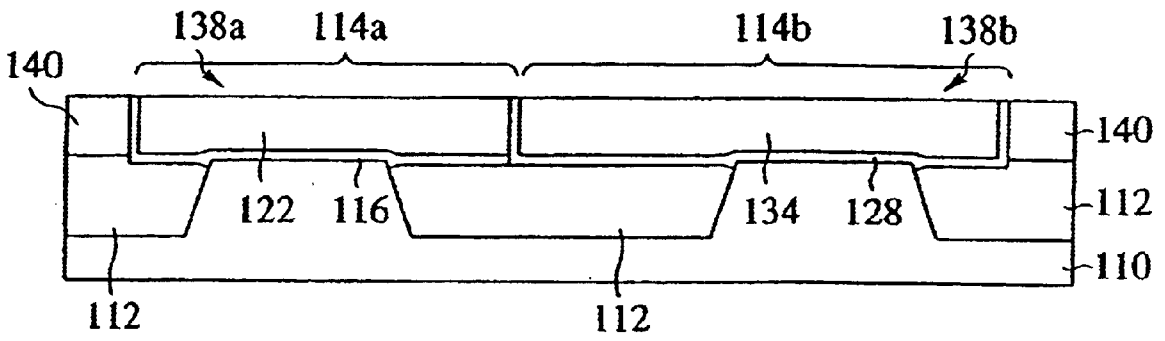

"RELATED ART"

FIG. 27

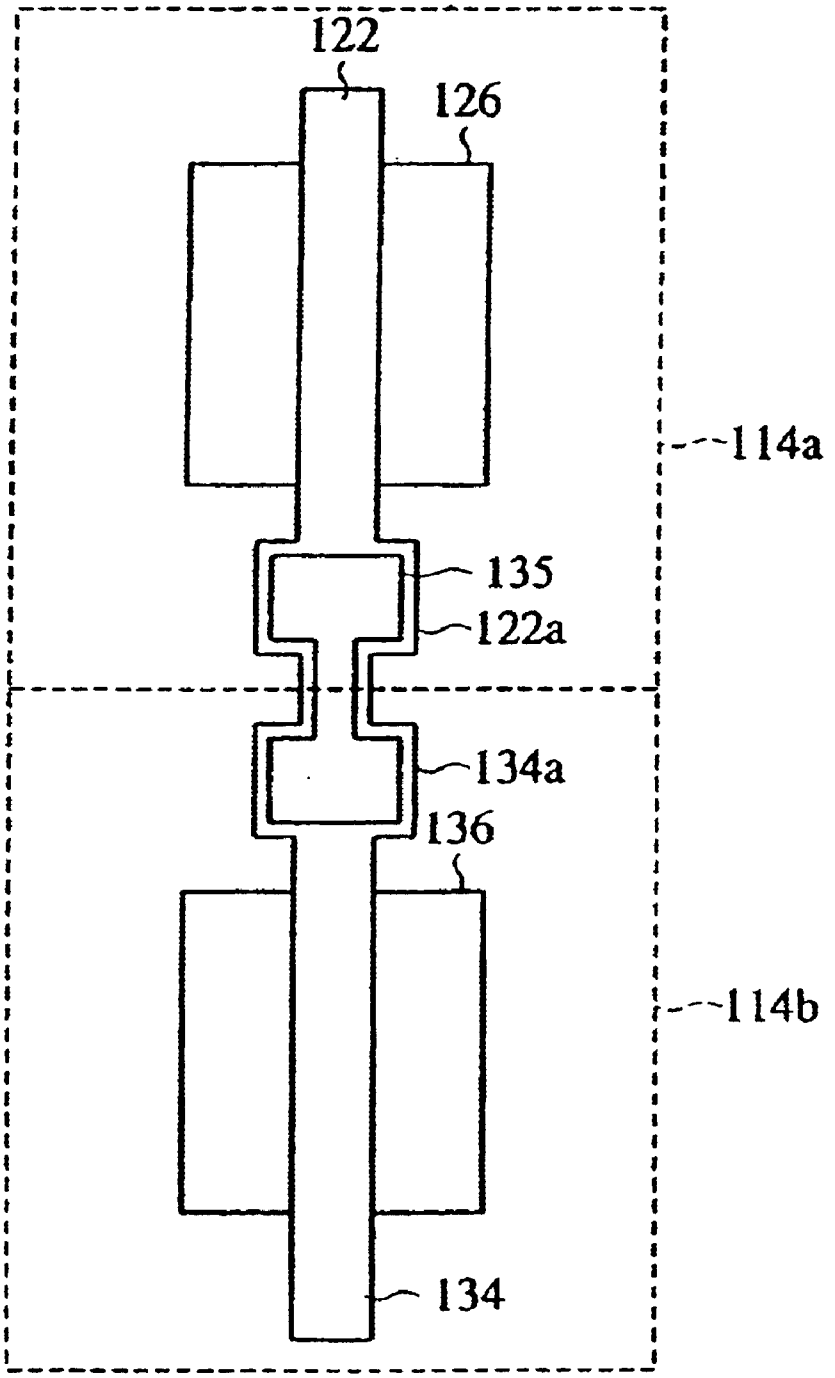

"RELATED ART"

FIG. 28

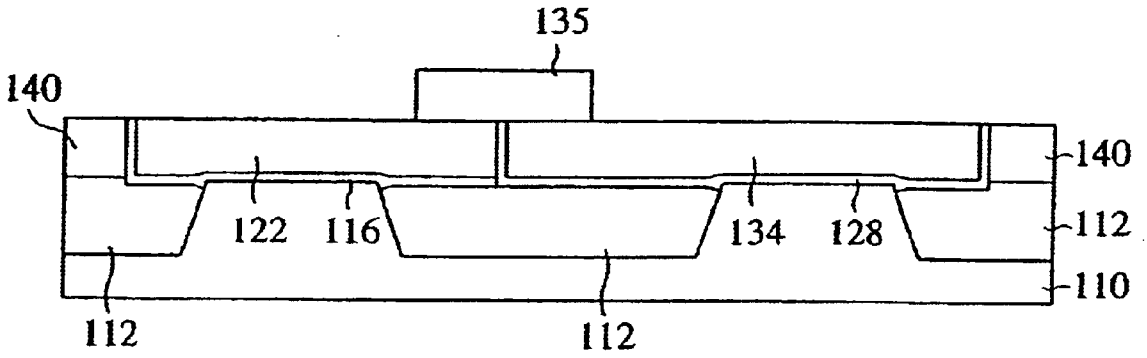

SEMICONDUCTOR DEVICE AND METHOD FOR FABRICATING THE SAME INCLUDING INTERCONNECTION OF TWO ELECTRODES

CROSS REFERENCE TO RELATED APPLICATION

This application is a Divisional of prior U.S. application Ser. No. 10/219,281 filed on Aug. 16, 2002, now U.S. Pat. No. 6,784,472 which is a Continuation of PCT application No. PCT/JP00/01838, which was filed on Mar. 24, 2000, and which designated the United States.

TECHNICAL FIELD

The present invention relates to a semiconductor device and a method for fabricating the semiconductor device, more specifically a semiconductor device including the gate electrodes formed of a metal-based material and a method for fabricating the semiconductor device.

BACKGROUND ART

Recently, information amounts for electronic equipments to process are on increase, and larger-scale, higher speed semiconductor integrated circuits are required. This is accompanied by micronization and speed-up of semiconductor devices.

Conventionally, polysilicon has been widely used in the gate electrodes of MIS (Metal Insulator Semiconductor) transistors, and due to the high resistance of polysilicon, the gate electrodes have large signal delays. As semiconductor devices are more micronized, the signal delay of the gate electrodes becomes more serious. It is necessary to make the gate electrodes less resistant.

As techniques for making the gate electrodes less resistant, semiconductor devices of the polycide structure and the salicide (Self-Aligned Silicide) structure are proposed. Recently, as the semiconductor devices are further micronized, the gate electrodes are required to be less resistant.

To make the gate electrodes less resistant it is proposed to use metals as materials of the gate electrodes. The conventionally used processes cannot be used in cases of using metals as materials of the gate electrodes. When the gate electrodes are formed of a metal, the heat processing for activating the sources/drains often damages the gate electrodes or increases leak current of the gate insulation film.

A technique which can prohibit the gate electrode damage and the gate leak current increase even in a case the gate electrodes are formed of a metal is proposed in the specification of Japanese Patent Laid-Open Publication No. Hei 10-189966/1998 and International Electron Device Meeting, TECHNICAL DIGEST, 1998, p.777–780.

The proposed semiconductor device fabrication method will be explained with reference to FIGS. **24**A to **25**B. FIGS. **24**A to **25**B are sectional views of the semiconductor device in the steps of the fabrication method.

As shown in FIG. **24**A, first dummy gate electrodes **148** are formed of polysilicon on a semiconductor substrate **110** with a dummy gate insulation film **146** formed therebetween. Next, a dopant is implanted shallowly in the semiconductor substrate by self-alignment with the dummy gate electrodes to form a shallow doped-region **136***a*. A sidewall insulation film **124** is formed on the side walls of the dummy gate electrodes **148**. A dopant is implanted deeply in the semiconductor substrate by self-alignment with the dummy gate electrodes with the sidewall insulation film **124** formed on to form a deep doped-region **136***b*. Thus a source/drain diffused layer **136** is formed of the shallow doped-region **136***a* and the deep doped-region **136***b*. Next a high-temperature thermal processing is performed for activating the sources/drains.

Next, an inter-layer insulation film **140** is formed on the entire surface and planarized until the upper surfaces of the dummy gate electrodes **148** are exposed (see FIG. **24**B).

Next, the dummy gate electrodes **148** and the dummy gate insulation film **146** are etched to form openings **156** down to the semiconductor substrate **110** (see FIG. **24**C).

Then, an insulation film **128** is formed on the entire surface. Then, a TiN film **130** is formed on the entire surface (see FIG. **25**A).

Next, the TiN film **130** and the insulation film **128** are polished by CMP (Chemical Mechanical Polishing) until the surface of the inter-layer insulation film **140** is exposed. Thus, the gate insulation film **128**, and a gate electrode **134** of the TiN film are buried in the openings **156** (see FIG. **25**B).

In the semiconductor device fabricated by the proposed fabrication method, after the high-temperature thermal processing for activating the sources/drains, the dummy gate electrodes and the dummy gate insulation film are etched, and then the gate insulation film and the gate electrodes are formed, whereby even in a case that the gate electrodes are formed of a metal, the gate electrode damage and gate leak current increase can be precluded.

On the other hand, recently semiconductor devices of the dual gate structure have been proposed as a technique which can realize low threshold voltages while depressing the short channel effect of the transistors. A semiconductor device of the dual gate structure is a semiconductor device having the gate electrodes of the p-channel MISFETs (Metal Insulator Semiconductor Field Effect Transistors) and the gate electrodes of the n-channel MISFETs formed of materials different from each other. Generally, the gate electrodes of the n-channel MISFETs are formed of n-type polysilicon, and the gate electrodes of the p-channel MISFETs are formed of p-type polysilicon. Semiconductor devices of such dual gate structure can realize low threshold volatges while depressing the short channel effect of the transistors, which is useful especially in semiconductor devices whose gate lengths are below 0.25 μm.

Here, it is considered to fabricate a semiconductor device of the dual gate structure by using the method shown in FIGS. **24**A to **25**B. FIG. **26** is a sectional view of the semiconductor device of the dual gate structure fabricated by using the proposed method.

As shown in FIG. **26**, an element isolation region **112** for defining element regions is formed on a semiconductor substrate **110**. An inter-layer insulation film **140** is formed on the semiconductor substrate **110** with the element isolation region **112** formed on.

A gate insulation film **116** and a gate electrode **122** of Pt are buried in the inter-layer insulation film **140** in a region **114***a* for a p-channel MISFET to be formed in. A gate insulation film **128** and a gate electrode **134** of TiN film are formed in the inter-layer insulation film **140** in a region **114***b* for an n-channel MISFET to be formed in. Thus, the gate electrode **122** of the p-channel MISFET **138***a* and the gate electrode **134** of the n-channel MISFET **138***b* form the semiconductor device using metal-based materials different from each other.

However, in the semiconductor device shown in FIG. **26**, because of the gate insulation film **128** formed on the side

wall of the gate electrodes **134**, the gate electrode **122** and the gate electrode **134** are insulated from each other by the gate insulation film **128**. Accordingly, the semiconductor device shown in FIG. **26** cannot normally operate.

Here, it is also considered to connect the gate electrode **122** and the gate electrode **134** by means of an interconnection electrode. FIG. **27** is a plan view of the semiconductor device having the gate electrodes interconnected with each other by means of the interconnection electrode.

As shown in FIG. **27**, a contact region **122***a* is formed in the gate electrode **122**, and a contact region **134***a* is formed in the gate electrode **134**. A source/drain diffused layer **126** is formed in the semiconductor substrate on both sides of the gate electrode **122**, and a source/drain diffused layer **136** is formed in the semiconductor substrate on both sides of the gate electrode **134**.

An interconnection electrode **135** for interconnecting the contact region **122***a* and the contact region **134***a* is formed on the contact region **122***a* and the contact region **134***a*. The thus formed interconnection electrode **135** can electrically interconnect the gate electrode **122** and the gate electrode **134** with each other.

However, in the semiconductor device shown in FIG. **27**, the contact regions **122***a*, **134***a* must be formed respectively in the gate electrode **122** and the gate electrode **134**, which restricts the freedom degree of the design and makes it difficult to integrate the semiconductor device vertically as viewed in the drawing. Thus, the semiconductor device shown in FIG. **27** ignores the original significance of providing a micronized semiconductor device.

Furthermore, the gate electrodes tend to be more micronized, which makes it very difficult to align the interconnection electrode with the gate electrodes. Specifically, the alignment precision is about 100 to 150 nm in the current fabrication process, and it is very difficult to securely interconnect the gate electrodes with each other by the interconnection electrode of, e.g., an about 150 nm-width. This makes the interconnection between the interconnection electrode and the gate electrode defective, which leads to lower fabrication yields of the semiconductor device.

In a case that the gate electrodes are connected to each other by the interconnection electrode, as shown in FIG. **28**, the interconnection electrodes **135** is projected beyond the surface of the inter-layer insulation film **140**. That is, cavities and concavities are generally formed. Accordingly, in fabricating a semiconductor device of a multi-layer structure, defective wiring, etc. tend to take place above the interconnection electrode **135**, which leads to a factor for lower fabrication yields of the semiconductor device.

An object of the present invention is to provide a semiconductor device having the gate electrodes of transistors of different conduction types from each other formed of different metal-based materials from each other, which can be fabricated with improved integration and improved yields, and a method for fabricating the semiconductor device.

DISCLOSURE OF THE INVENTION

The above-described object is achieved by a semiconductor device comprising: a first transistor having a first gate electrode; a second transistor having a second gate electrode which is different from the first gate electrodes; an insulation film formed between the first gate electrode and the second gate electrode; and an interconnection electrode buried in a concavity formed in the first gate electrode, the second gate electrode and the insulation film and electrically interconnecting the first gate electrode and the second gate electrode. The interconnection electrode is buried in the concavity formed in the first gate electrode, the second gate electrode and the insulation film to electrically interconnect the first gate electrode and the second gate electrode, whereby the semiconductor device can have higher integration and can be highly reliable.

The above-described object is achieved by a semiconductor device comprising: a first transistor having a first gate electrode; a second transistor having a second gate electrode which is different from the first gate electrodes; an insulation film formed between the first gate electrode and the second gate electrode; and an interconnection electrode buried in a concavity formed in the insulation film and electrically interconnecting the first gate electrode and the second gate electrode. The interconnection electrode is buried in the concavity formed in the insulation film to electrically interconnect the first gate electrode and the second gate electrode, whereby the semiconductor device can have high integration and can be highly reliable.

The above-described object is achieved by a method for fabricating a semiconductor device comprising the steps of: forming a dummy gate electrode in a first region and a second region on a semiconductor substrate; forming a first insulation film for covering the side wall of the dummy gate electrode on the semiconductor substrate; etching the dummy gate electrode in the first region to form in the first region a first opening down to the semiconductor substrate; forming a second insulation film in the first opening; forming a first gate electrode in the first opening with the second insulation film formed on; etching the dummy gate electrode in the second region to form in the second region a second opening down to the semiconductor substrate; forming a third insulation film in the second opening: forming a second gate electrode which is different from the first gate electrode in the second opening with the third insulation film formed on; removing top parts of the first gate electrode, the third insulation film and the second gate electrodes to form a concavity; and burying in the concavity an interconnection electrode electrically interconnecting the first gate electrode and the second gate electrode. The interconnection electrode is buried in the concavity formed in the first gate electrode, the second gate electrode and the insulation film to electrically interconnect the first gate electrode and the second gate electrode, whereby the semiconductor device can have higher integration and can be highly reliable.

The above-described object is achieved by a method for fabricating a semiconductor device comprising the steps of: forming a dummy gate electrode in a first region and a second region on a semiconductor substrate; forming a first insulation film for covering the side wall of the dummy gate electrode on the semiconductor substrate; etching the dummy gate electrode in the first region to form in the first region a first opening down to the semiconductor substrate; forming a second insulation film in the first opening; forming a first gate electrode in the first opening with the second insulation film formed on; etching the dummy gate electrode in the second region to form in the second region a second opening down to the semiconductor substrate; forming a third insulation film in the second opening: forming a second gate electrode which is different from the first gate electrode in the second opening with the third insulation film formed on; etching a top part of the third insulation film between the first gate electrode and the second gate electrode to form a concavity; and burying in the concavity an interconnection electrode for electrically interconnecting the first gate electrode and the second gate electrode. The interconnection electrode is buried in the concavity formed in the insulation

film to electrically interconnect the first gate electrode and the second gate electrode, whereby the semiconductor device can have higher integration and can be highly reliable.

BRIEF DESCRIPTION OF THE DRAWINGS

FIGS. **1**A to **1**C are sectional views of the semiconductor device according to a first embodiment of the present invention.

FIG. **2** is a plan view of the semiconductor device according to the first embodiment of the present invention.

FIGS. **3**A to **3**C are sectional views of the semiconductor device according to the first embodiment of the present invention in the steps of the method for fabricating the same, which explain the method (Part 1).

FIGS. **4**A to **4**C are sectional views of the semiconductor device according to the first embodiment of the present invention in the steps of the method for fabricating the same, which explain the method (Part 2).

FIGS. **5**A to **5**C are sectional views of the semiconductor device according to the first embodiment of the present invention in the steps of the method for fabricating the same, which explain the method (Part 3).

FIGS. **6**A to **6**C are sectional views of the semiconductor device according to the first embodiment of the present invention in the steps of the method for fabricating the same, which explain the method (Part 4).

FIGS. **7**A to **7**C are sectional views of the semiconductor device according to the first embodiment of the present invention in the steps of the method for fabricating the same, which explain the method (Part 5).

FIGS. **8**A to **8**C are sectional views of the semiconductor device according to the first embodiment of the present invention in the steps of the method for fabricating the same, which explain the method (Part 6).

FIGS. **9**A to **9**C are sectional views of the semiconductor device according to the first embodiment of the present invention in the steps of the method for fabricating the same, which explain the method (Part 7).

FIGS. **10**A to **10**C are sectional views of the semiconductor device according to the first embodiment of the present invention in the steps of the method for fabricating the same, which explain the method (Part 8).

FIGS. **11**A to **11**C are sectional views of the semiconductor device according to the first embodiment of the present invention in the steps of the method for fabricating the same, which explain the method (Part 9).

FIGS. **12**A to **12**C are sectional views of the semiconductor device according to the first embodiment of the present invention in the steps of the method for fabricating the same, which explain the method (Part 10).

FIGS. **13**A to **13**C are sectional views of the semiconductor device according to a modification of the first embodiment of the present invention, which explain the semiconductor device.

FIGS. **14**A to **14**C are sectional views of the semiconductor device according to the modification of the first embodiment of the present invention in the steps of the method for fabricating the same, which explain the method.

FIGS. **15**A to **15**C are sectional views of the semiconductor device according to a second embodiment of the present invention.

FIGS. **16**A to **16**C are sectional views of the semiconductor device according to the second embodiment of the present invention in the steps of the method for fabricating the same, which explain the method (Part 1).

FIGS. **17**A to **17**C are sectional views of the semiconductor device according to the second embodiment of the present invention in the steps of the method for fabricating the same, which explain the method (Part 2).

FIGS. **18**A to **18**C are sectional views of the semiconductor device according to the second embodiment of the present invention in the steps of the method for fabricating the same, which explain the method (Part 3).

FIGS. **19**A to **19**C are sectional views of the semiconductor device according to the second embodiment of the present invention in the steps of the method for fabricating the same, which explain the method (Part 4).

FIGS. **20**A to **20**C are sectional views of the semiconductor device according to the second embodiment of the present invention in the steps of the method for fabricating the same, which explain the method (Part 5).

FIG. **21** is a sectional view of the semiconductor device according to the first embodiment, which includes the gate electrodes of a single-layer structure.

FIG. **22** is a sectional view of the semiconductor device according to a modification of the first embodiment, which includes the gate electrodes of the single-layer structure.

FIG. **23** is a sectional view of the semiconductor device according to the second embodiment, which includes the gate electrodes of the single-layer structure.

FIGS. **24**A to **24**C are sectional views of the semiconductor device in the steps of the proposed method for fabricating the semiconductor device, which show the method (Part 1).

FIGS. **25**A and **25**B are sectional views of the semiconductor device in the steps of the proposed method for fabricating the semiconductor device, which show the method (Part 2).

FIG. **26** is a sectional view of a semiconductor device of the dual gate structure fabricated by the proposed method.

FIG. **27** is a plan view of the semiconductor device having the gate electrodes interconnected by an interconnection gate.

FIG. **28** is a sectional view of the semiconductor device having the gate electrodes interconnected by the interconnection electrode.

BEST MODES FOR THE CARRYING OUT THE INVENTION

(A First Embodiment)

The semiconductor device according to a first embodiment of the present invention will be explained with reference to FIGS. **1**A to **12**C. FIGS. **1**A to **1**C are sectional views of the semiconductor device according to the present embodiment. FIG. **2** is a plan view of the semiconductor device according to the present embodiment. FIGS. **3**A to **12**C are sectional views of the semiconductor device according to the present invention in the steps of the method for fabricating the same, which explain the method.

(The Semiconductor Device)

The semiconductor device according to the present embodiment will be explained with reference to FIGS. **1**A to **2**. FIG. **1**A is the sectional view along the line A–A' in FIG. **2** and shows a p-channel MISFET. FIG. **1**B is the sectional view along the line B–B' in FIG. **2** and shows an n-channel MISFET. FIG. **1**C is the sectional view along the line C–C' in FIG. **2** and shows the sectional view along the gate electrode.

As shown in FIG. **1**C, an element isolation region **12** for defining element regions is formed on a semiconductor substrate **10** of p-type silicon.

The region **14***a* on the left side of the drawing of FIG. **1**C is a region for the p-channel MISFET to be formed in. The region **14***b* on the right side of the drawing of FIG. **1**C is a region for the n-channel MISFET to be formed in.

In the region **14***a* for the p-channel MISFET to be formed in, as shown in FIG. **1**A, an insulation film **16** of a 1 nm-thickness SiO_2 film and a 5 nm-thickness Ta_2O_5 film is formed.

A 10 nm-thickness Pt film **18** is formed on the insulation film **16**. A 110 to 135 nm-thickness tungsten (W) film **20** is formed on the Pt film **18**. A film thickness of the tungsten film **20** is, e.g., 114 nm. The Pt film **18** and the tungsten film **20** form the gate electrode **22** of the p-channel MISFET.

The insulation film **16** is formed also on the side wall of the gate electrode **22**. The insulation film **16** functions also as the gate insulation film of the p-channel MISFET. A sidewall insulation film **24** is formed on the side wall of the insulation film **16**.

A shallow doped-region **26***a* doped shallow with a p-type dopant is formed in the semiconductor substrate **10** on both sides of the gate electrode **22**. A deep doped-region **26***b* doped deep with an p-type dopant is formed in the semiconductor substrate **10** on both sides of the gate electrode **22** with the sidewall insulation film **24** formed on. The shallow doped-region **26***a* and the deep doped-region **26***b* formed a source/drain diffused layer **26**.

On the other hand, in the region **14***b* for the n-channel MISFET to be formed in, as shown in FIG. **1**B, an insulation film **28** of a 1 nm-thickness SiO_2 film and a 5 nm-thickness Ta_2O_5 film is formed.

A 10 nm-thickness TiN film **30** is formed on the insulation film **28**. A 110 to 135 nm-thickness tungsten film **32** is formed on the TiN film **30**. A thickness of the tungsten film **32** is, e.g., 114 nm. The TiN film **30** and the tungsten film **32** form the gate electrode **34** of the n-channel MISFET.

The insulation film **28** is formed also on the side wall of the gate electrode **34**. The insulation film **34** functions as the gate insulation film of the n-channel MISFET. A sidewall insulation film **24** is formed on both sides of the insulation film **28**.

In the semiconductor substrate **10** on both sides of the gate electrode **34**, a shallow doped-region **36***a* doped shallow with an n-type dopant is formed. A deep doped-region **36***b* doped deep with an n-type dopant is formed in the semiconductor substrate **10** on both sides of the gate electrode **34** with the sidewall insulation film **24** formed on. The shallow doped-region **36***a* and the deep doped-region **36** form a source/drain diffused layer **36**.

The p-channel MISFET **38***a* and the n-channel MISFET **38***b* having such structures are buried in an inter-layer insulation film **40** of a 150 nm-thickness SiO_2.

As shown in FIG. **1**C, the gate insulation film **28** is formed between the gate electrode **22** and the gate electrode **34**.

A concavity **42** is formed in the top parts of the gate electrodes **22**, **34** and the insulation film **28**. An interconnection electrode **44** of TiN film is buried in the concavity **42**.

As shown in FIG. **1**C, the gate electrode **22** and the gate electrode **34** are electrically connected with each other by the interconnection electrode **44**.

The semiconductor device according to the present embodiment has such structure.

(Method for Fabricating the Semiconductor Device)

Next, the method for fabricating the semiconductor device will be explained with reference to FIG. **3**A to FIG. **12**C.

As shown in FIGS. **3**A to **3**C, first, the element isolation region **12** for defining element regions is formed on a semiconductor substrate **10** of p-type silicon by high density plasma CVD.

Next, a dummy gate insulation film **46** of a 5 nm-thickness SiO_2 is formed by thermal oxidation.

Then, a 200 nm-thickness polysilicon film is formed by CVD. Then, the polysilicon film is etched by photolithography to form a dummy gate electrode **48** of the polysilicon.

Next, a photoresist mask (not shown) exposing the region **14***a* for the p-channel MISFET to be formed in is formed. Then, with the photoresist mask as a mask, a p-type dopant is implanted shallow into the semiconductor substrate **10** by self-alignment with the dummy gate electrode **48**. Thus, the shallow doped-region **26***a* is formed in the semiconductor substrate **10** on both sides of the dummy gate electrode **48**. The p-type dopant can be, e.g., B (boron), BF_2 or others.

Next, a photoresist mask (not shown) exposing the region **14***b* for the n-channel MISFET to be formed in is formed. Then, with the photoresist mask as a mask, an n-type dopant is implanted shallow into the semiconductor substrate **10** by self-alignment with the dummy gate electrode **48**. Thus, the shallow doped-region **36***a* is formed in the semiconductor substrate **10** on both sides of the dummy gate electrode **48**. The n-type dopant can be, e.g., P (phosphorus), As (Arsenic) or others.

Then, a 60 nm-thickness Si_3N_4 is formed on the entire surface. Then, the Si_3N_4 film is anisotropically etched to form the sidewall insulation film **24** of the Si_3N_4 on the side wall of the dummy gate electrode **48**.

Then, a photoresist mask (not shown) exposing the region **14***a* for the p-channel MISFET to be formed in is formed. Then, with the photoresist mask as a mask, a p-type dopant is implanted deep into the semiconductor substrate **10** by self-alignment with the dummy gate electrode **48** with the sidewall insulation film **24** formed on. Thus, the deep doped-region **26***b* is formed in the semiconductor substrate **10** on both sides of the gate electrode **48** with the sidewall insulation film **24** formed on. Thus, the shallow doped-region **26***a* and the deep doped-region **26***b* form the source/drain diffused layer **26**.

Next, a photoresist mask (not shown) exposing the region **14***b* for the n-channel MISFET to be formed in is formed. With the photoresist mask as a mask, an n-type dopant is implanted deep into the semiconductor substrate **10** by self-alignment with the dummy electrode **48** with the sidewall insulation film **24** formed on. Thus, the deep doped-region **36***b* is formed in the semiconductor substrate **10** on both sides of the dummy gate electrode **48** with the sidewall insulation film **24** formed on. Thus, the shallow doped-region **36***a* and the deep doped-region **36***b* form the source/drain diffused layer **36**.

Then, thermal processing for activating the source/drain diffused layers **26**, **36** is performed.

Then, the inter-layer insulation film **40** of an about 500 nm-thickness SiO_2 is formed on the entire surface by high density plasma CVD. Then, the inter-layer insulation film **40** is polished by CMP until the surface of the dummy gate electrode **48** is exposed.

Next, a photoresist mask **50** for covering the region **14***b* for the n-channel MISFET to be formed in is formed. Then,

with the photoresist mask **50** as a mask, the dummy gate electrode **48** and the dummy gate insulation film **46** are etched. Thus, an opening **52** is formed down to the semiconductor substrate **10** (see FIGS. **4**A and **4**C).

Next, a 1 nm-thickness SiO_2 film is formed on the entire surface by CVD. Next, a 5 nm-thickness Ta_2O_5 film is formed on the entire surface by CVD. Thus, the insulation film **16** is formed of the SiO_2 film and the Ta_2O_5 film.

Next, a 10 nm-thickness Pt film **18** is formed on the entire surface by sputtering.

Then, a 300 nm-thickness tungsten film **20** is formed on the entire surface by CVD (see FIGS. **5**A and **5**C).

Then, the tungsten film **20**, the Pt film **18** and the insulation film **16** are polished by CMP until the surface of the inter-layer insulation film **40** is exposed. Thus, the insulation film **16** of the SiO_2 film and the Ta_2O_5 film, and the gate electrode **22** of the Pt film and the tungsten film are buried in the opening **52**.

Thus, the p-channel MISFET **38***a* having the gate electrode **22** of the Pt film **18** and the tungsten film **20** is formed (see FIGS. **6**A and **6**C).

Next, a photoresist mask **54** for covering the region **14***a* for the p-channel MISFET to be formed in is formed. Then, with the photoresist mask **54** as a mask, the dummy gate electrode **48** and the dummy gate insulation film **46** are etched. Thus, an opening **56** is formed down to the semiconductor substrate **10** (see FIGS. **7**A and **7**C).

Next, a 1 nm-thickness SiO_2 film is formed on the entire surface by CVD. Then, a 5 nm-thickness Ta_2O_5 film is formed on the entire surface by CVD. Thus, the insulation film **28** of the SiO_2 film and the Ta_2O_5 film is formed.

Next, the TiN film **30** of a 10 nm-thickness is formed on the entire surface by CVD.

Next, the tungsten film **32** of a 300 nm-thickness is formed on the entire surface by CVD (see FIGS. **8**A and **8**C).

Then, the tungsten film **32**, the TiN film **30** and the insulation film **28** are polished by CMP until the surface of the inter-layer insulation film **40** is exposed. Thus, the insulation film **28** of the SiO_2 film and the Ta_2O_5 film, the gate electrode **34** of the TiN film **30** and the tungsten film **32** are buried in the opening **56**.

Thus, the n-channel MISFET **38***b* having the gate electrode **34** of the TiN film **30** and the tungsten film **32** is formed (see FIGS. **9**A and **9**C).

Next, the gate electrodes **22**, **34** and the insulation films **16**, **28** are polished by CMP to thereby form the concavity **42** of an about 20 nm-depth from the surface of the inter-layer insulation film **40**. A polishing agent is, e.g., silica as grains, and hydrogen peroxide as an oxidation agent. Such polishing agent can highly selectively polish the tungsten films **20**, **32** to thereby to form the concavity **42** (see FIGS. **10**A and **10**C).

Then, the TiN film **58** of a 100 nm-thickness is formed on the entire surface by sputtering (see FIGS. **11**A to **11**C).

Next, the TiN film **58** is polished by CMP until the inter-layer insulation film **40** is exposed. A polishing agent is, e.g., one containing alumina as a main component. A rotation number of the platen is, e.g., 50 rpm, and a rotation number of the head is, e.g., 50 rpm. A pressing pressure to the side of the main is, e.g., 4.0 psi (pounds per square inch), and a pressing force to the side of the back is, e.g., 3.5 psi.

Thus, the interconnection electrode **44** of the TiN film **58** is buried in the concavity **42**.

The semiconductor device according to the present embodiment is thus fabricated.

The semiconductor device according to the present embodiment is characterized mainly in that the interconnection electrode **44** is buried in the concavity **42** formed in the gate electrodes **22**, **34** and the gate insulation film **28**. In the semiconductor device shown in FIG. **27**, in order to interconnect the gate electrode and the gate electrode with each other, the contact regions must be provided respectively in the gate electrodes, which is a factor for hindering the integration. In the semiconductor device according to the present embodiment, the interconnection electrode **44** is buried in the concavity **42** formed in the gate electrodes **22**, **34** and the insulation film **28**, electrically interconnecting the gate electrode **22** and the gate electrodes **34** with each other, which is beneficial to the integration of the semiconductor device.

In the semiconductor device shown in FIG. **27**, the alignment error taking place in forming the interconnection electrode causes defective interconnection, which often lowers fabrication yields of the semiconductor device. In the present embodiment, however, the interconnection electrode **44** is may be buried in the concavity **42** formed in the gate electrodes **22**, **34** and the insulation film **28**, which makes the alignment for forming the interconnection electrode **44** unnecessary. Thus, according to the present embodiment, the semiconductor device can be micronized at high yields.

Furthermore, according to the present embodiment, the interconnection electrode **44** is buried in the concavity **42** formed in the gate electrodes **22**, **34** and the insulation film **28**, and accordingly, the interconnection electrode is never projected beyond the interconnection insulation film, as is in the semiconductor device shown in FIG. **28**. Thus, according to the present embodiment, the formation of concavities and convexities with respect to the surface of the inter-layer insulation film can be precluded. This leads to the fabrication of the semiconductor device of the multi-layer structure having high reliability at high yields.

(Modification)

Next, a modification of the semiconductor device according to the present embodiment and the method for fabricating the semiconductor device will be explained with reference to FIG. **13**A to FIG. **14**C. FIG. **13**A to FIG. **13**C are sectional views of the semiconductor device according to the present embodiment. FIGS. **14**A to **14**C are sectional views of the semiconductor device according to the present embodiment in the steps of the method for fabricating the same, which show the method.

First, the semiconductor device according to the present modification will be explained.

As shown in FIGS. **13**A to **13**C, the semiconductor device according to the present modification is characterized mainly in that a dummy gate electrode **48** is left between the gate electrode **22** and the gate electrode **34**.

Even in the case that the dummy gate electrode **48** is thus left between the gate electrodes **22** and the gate electrode **34**, a concavity **42** is formed on the top parts of the gate electrodes **22**, **34**, the insulation films **16**, **28** and the dummy gate electrode **48**, and the interconnection electrode **44** is buried in the concavity **42**. The same semiconductor device as the semiconductor device according to the first embodiment shown in FIG. **1** can be provided.

Next, the method for fabricating the semiconductor device according to the present modification will be explained with reference to FIGS. **14**A to **14**C. FIGS. **14**A to **14**C are the sectional views along the line C–C' in FIG. **2**.

The method for fabricating the semiconductor device according to the present modification is the same up to the

step of forming the gate electrode **22** including the step as in the method for fabricating the semiconductor device according to the first embodiment shown in FIGS. **3**A to **6**C, and the explanation of the method up to the step is not repeated.

Next, a photoresist mask **54***a* for covering a region **14***a* for a p-channel MISFET to be formed in is formed. With the photoresist mask **54***a* as a mask, the dummy gate electrode **48** and the dummy gate insulation film **46** are etched. As shown in FIG. **14**A, because of the photoresist mask **54***a* formed not only on the gate electrode **22** and but also on a part of the upper surfaces of the dummy gate electrode **48**, the part of the dummy gate electrode **48** is left when the dummy gate electrode **58** is etched.

The following steps up to the step of forming the gate electrode **34** including the step are the same as in the method for fabricating the semiconductor device according to the first embodiment shown in FIGS. **8**A to **9**C, and their explanation is not repeated.

Next, in the same was as in the method for fabricating the semiconductor device according to the first embodiment shown in FIGS. **10**A to **10**C, the top parts of the gate electrodes **22**, **34**, the insulation films **16**, **28** and the dummy gate electrode **48** are polished to form the concavity **42** (see FIG. **14**B).

The following step of forming a TiN film **58** is the same as in the method for fabricating the semiconductor device according to the first embodiment shown in FIGS. **11**A to **11**C, and its explanation is not repeated.

Next, in the same way as in the method for fabricating the semiconductor device according to the first embodiment shown in FIGS. **12**A to **12**C, the interconnection electrode **44** of the TiN film **58** is buried in the concavity **42**. Thus, the semiconductor device according to the present modification is fabricated (see FIG. **14**C).

As described above, according to the present modification, even in a case that the dummy gate electrode **48** is left between the gate electrode **22** and the gate electrode **34**, the same semiconductor device as that according to the first embodiment can be provided.

(A Second Embodiment)

The semiconductor device according to a second embodiment of the present invention and the method for fabricating the semiconductor device will be explained with reference to FIG. **15**. FIGS. **15**A to **15**C are sectional views of the semiconductor device according to the present embodiment, which explain the semiconductor device. FIGS. **16**A to **20**C are sectional views of the semiconductor device according to the present embodiment in the steps of the method for fabricating the semiconductor device, which explain the method. The same members of the present embodiment as those of the semiconductor device according to the first embodiment and the method for fabricating the semiconductor device shown in FIGS. **1**A to **14**C are represented by the same reference numbers not to repeat or to simplify their explanation.

(The Semiconductor Device)

The semiconductor device according to the present embodiment includes insulation films **16***a*, **28***a* formed of a material different from that of the insulation films **16**, **28** of the semiconductor device according to the first embodiment. Specifically, the insulation films **16***a*, **28***a* are formed of Si_3N_4.

The top parts of the insulation films **16***a*, **28***a* are etched by an about 20 nm-depth with respect to the surface of the inter-layer insulation film **40**, forming a concavity **42***a*.

An interconnection electrode **44***a* of TiN is buried in the concavity **42***a*.

The semiconductor device according to the present embodiment has such structure.

(Method for Fabricating the Semiconductor Device)

Next, the method for fabricating the semiconductor device according to the present embodiment will be explained with reference to FIGS. **16**A to **16**C.

First, the steps up to the step of etching a dummy gate electrode **48** in a region **14***a* for a p-channel MISFET including the step are the same as those of the method for fabricating the semiconductor device according to the first embodiment shown in FIGS. **3**A to **4**C, and their explanation is not repeated.

Then, the insulation film **16***a* of a 5 nm-thickness Si_3N_4 is formed on the entire surface by CVD (see FIGS. **16**A to **16**C).

The following steps up to the step of etching the dummy gate electrode **48** in a region **14***b* for an n-channel MISFET to be formed in are the same as those of the method for fabricating the semiconductor device according to the first embodiment shown in FIGS. **6**A to **7**C, and their explanation is not repeated.

Next, the insulation film **28***a* of a 5 nm-thickness Si_3N_4 is formed on the entire surface by CVD (see FIGS. **17**A to **17**C).

The following steps of forming the gate electrode **34** are the same as those of the method for fabricating the semiconductor device according to the first embodiment shown in FIGS. **9**A to **9**C, and their explanation is not repeated.

Then, the insulation films **16***a*, **28***a* are etched by an about 20 nm-depth with respect to the surface of the inter-layer insulation film **40** by dry etching. Thus the concavity of an about 20 nm-depth is formed (see FIGS. **18**A to **18**C).

Then, a 100 nm-thickness TiN film **58** is formed on the entire surface by CVD (see FIGS. **19**A to **19**B).

Next, the TiN film **58** is polished by CMP until the surface of the inter-layer insulation film is exposed. Thus, the interconnection electrode **44***a* of the TiN film **58** is buried in the concavity **42** (see FIGS. **20**A to **20**C).

The semiconductor device according to the present embodiment is thus fabricated.

As described above, according to the present embodiment, the top parts of the insulation films **16***a*, **28***a* are etched to thereby form the concavity **42***a*, and the interconnection electrode **44***a* is buried in the concavity **42***a*. Even in such structure, the interconnection electrode **44***a* buried in the concavity **42***a* electrically interconnects the gate electrode **22** and the gate electrode **34** with each other, whereby the present embodiment can provide the same semiconductor device as the first embodiment.

(Modified Embodiments)

The present invention is not limited to the above-described embodiments and can cover other various modifications.

For example, in the above-described embodiments, the gate electrodes have the layer structure. However, the gate electrodes do not essentially have the layer structure and may have a single layer structure. FIG. **21** is a sectional view of the semiconductor device according to the first embodiment shown in FIGS. **1**A to **1**C, which includes the gate electrodes of the single layer structure. The gate electrode **22***a* of the p-channel MISFET **38***a* is formed of a Pt film **18** alone, and the gate electrode **34***a* of the n-channel MISFET **38***b* is formed of a TiN film **30** alone. FIG. **22** is a sectional view of the semiconductor device according to the modification of the first embodiment shown in FIGS. **13**A to **13**C, which includes the gate electrodes have the single layer structure. FIG. **23** is a sectional view of the semiconductor device according to the second embodiment shown in FIGS. **15**A to **15**C, which includes the gate electrodes of the single layer structure.

In the above-described embodiments, the insulation films **16**, **28** are formed of Ta_2O_5 film but may not be formed essentially of Ta_2O_5 film. The insulation films **16**, **28** may be formed of, e.g., Si_3N_4 film, Al_2O_3 film, ZrO_2 film, $ZrSiO_2$ film, HfO_2 film, $HfSiO_2$ film or others.

In the above-described embodiments, the gate electrodes **22**, **34** are formed of tungsten film **20**, **32** but are not formed essentially of tungsten film. The gate electrodes **22**, **34** may be formed of, e.g., Al film or others.

In the above-described embodiments, the gate electrode **22** of the p-channel MISFET **38***a* is formed of Pt of an about 5.3 eV work function but may not be essentially formed of Pt. The gate electrode **22** may be formed of any material as long as the material has a work function suitable for the material of the gate electrode of the p-channel MISFET **38***a*. For example, Re (Rhenium) of an about 5.0 eV work function, Ir (Iridium) of an about 4.8 eV work function, Pd (Palladium) of an about 4.8 eV work function, Rh (Rhodium) of an about 4.8 eV work function or others may be used.

In the above-described embodiments, the gate electrode **34** of the n-channel MISFET **38***b* is formed of TiN of an about 3.7 eV work function but is not formed essentially of TiN. The gate electrode **34** of the n-channel MISFET **38***b* can be formed of any material as long as the material has a work function suitable for the material of the gate electrode **34**. For example, Al of an about 4.2 eV work function, NbN (Nb: Niobium) of a 3.9 eV work function, In (Indium) of a 4.2 eV work function or others may be used.

In the above-described embodiments, the interconnection electrode is formed of TiN but is not formed essentially of TiN. The interconnection electrode may be formed suitably of a multi-layer film of, e.g., Ti and TiN.

In the above-described embodiments, silicon substrates are used, but silicon substrates are not essential. Any semiconductor substrate may be used.

In the above-described embodiments, the gate electrodes are formed of metal-based materials but may be formed of any material other than metal-based materials.

INDUSTRIAL APPLICABILITY

The present invention is applicable to semiconductor devices and method for fabricating the semiconductor devices, and are useful specifically for semiconductor devices having the gate electrodes formed of a metal-based material and method for fabricating the semiconductor devices.

What is claimed is:

1. A method for fabricating a semiconductor device comprising the steps of:

forming a dummy gate electrode in a first region and a second region on a semiconductor substrate;

forming a first insulation film for covering the side wall of the dummy gate electrode on the semiconductor substrate;

etching the dummy gate electrode in the first region to form in the first region a first opening down to the semiconductor substrate;

forming a second insulation film in the first opening;

forming a first gate electrode in the first opening with the second insulation film formed on;

etching the dummy gate electrode in the second region to form in the second region a second opening down to the semiconductor substrate;

forming a third insulation film in the second opening;

forming a second gate electrode which is different from the first gate electrode in the second opening with the third insulation film formed on;

removing top parts of the first gate electrode, the third insulation film and the second gate electrodes to form a concavity; and

burying in the concavity an interconnection electrode electrically interconnecting the first gate electrode and the second gate electrode.

2. A method for fabricating a semiconductor device according to claim **1**, wherein

in the step of forming the concavity, the top parts of the first gate electrode, the third insulation film and the second gate electrode are removed by polishing.

3. A method for fabricating a semiconductor device comprising the steps of:

forming a dummy gate electrode in a first region and a second region on a semiconductor substrate;

forming a first insulation film for covering the side wall of the dummy gate electrode on the semiconductor substrate;

etching the dummy gate electrode in the first region to form in the first region a first opening down to the semiconductor substrate;

forming a second insulation film in the first opening;

forming a first gate electrode in the first opening with the second insulation film formed on;

etching the dummy gate electrode in the second region to form in the second region a second opening down to the semiconductor substrate;

forming a third insulation film in the second opening;

forming a second gate electrode which is different from the first gate electrode in the second opening with the third insulation film formed on;

etching a top part of the third insulation film between the first gate electrode and the second gate electrode to form a concavity; and

burying in the concavity an interconnection electrode for electrically interconnecting the first gate electrode and the second gate electrode.

4. A method for fabricating a semiconductor device according to claim **1**, wherein

in the step of forming the first gate electrode or forming the second gate electrode, the first gate electrode or the second gate electrode including a film of a metal or a compound of the metal is formed.

5. A method for fabricating a semiconductor device according to claim **2**, wherein

in the step of forming the first gate electrode or forming the second gate electrode, the first gate electrode or the second gate electrode including a film of a metal or a compound of the metal is formed.

6. A method for fabricating a semiconductor device according to claim **3**, wherein

in the step of forming the first gate electrode or forming the second gate electrode, the first gate electrode or the second gate electrode including a film of a metal or a compound of the metal is formed.

* * * * *