US 20040013589A1

(19) United States

(12) Patent Application Publication (10) Pub. No.: US 2004/0013589 A1

Vosteen et al. (43) Pub. Date: Jan. 22, 2004

(54) **PROCESS FOR REMOVING MERCURY FROM FLUE GASES**

(75) Inventors: **Bernhard Vosteen**, Cologne (DE); **Joachim Beyer**, Kuerten (DE); **Theodor-Gerhard Bonkhofer**, Essen (DE); **Olaf Fleth**, Grevenbroich (DE); **Andrea Wieland**, Maria Rojach (AT); **Andreas Pohontsch**, Goerlitz (DE); **Rico Kanefke**, Merseburg (DE); **Ewa Standau**, Merseburg (DE); **Claus Mueller**, Kuerten (DE); **Michael Nolte**, Goslar (DE); **Heinz Koeser**, Ingelheim (DE)

Correspondence Address:
WILLIAM GERSTENZANG
NORRIS, MCLAUGHLIN & MARCUS, P.A.
220 EAST 42ND STREET, 30TH FLOOR
NEW YORK, NY 10017 (US)

(73) Assignee: **Bayer AG**, Leverkusen (DE)

(21) Appl. No.: **10/202,571**

(22) Filed: **Jul. 24, 2002**

(30) **Foreign Application Priority Data**

Jul. 22, 2002 (DE) 102 33 173.1

Publication Classification

(51) **Int. Cl.**[7] **B01D 53/64**

(52) **U.S. Cl.** **423/210**; 95/234; 95/134

(57) **ABSTRACT**

The invention describes a process for removing mercury from flue gases of high-temperature plants, in particular power stations and waste incineration plants in which a bromine compound is fed to the if appropriate multistage furnace and/or the flue gas in a plant section downstream of the furnace, the temperature during contact of the bromine compound with the flue gas being at least 500° C., preferably at least 800° C. The combustion is carried out in the presence of a sulphur compound, in particular sulphur dioxide. Subsequently to the furnace, the flue gas is subjected to an if appropriate multistage cleanup for removing mercury from the flue gas, which cleanup comprises a wet scrubber and/or a dry cleanup.

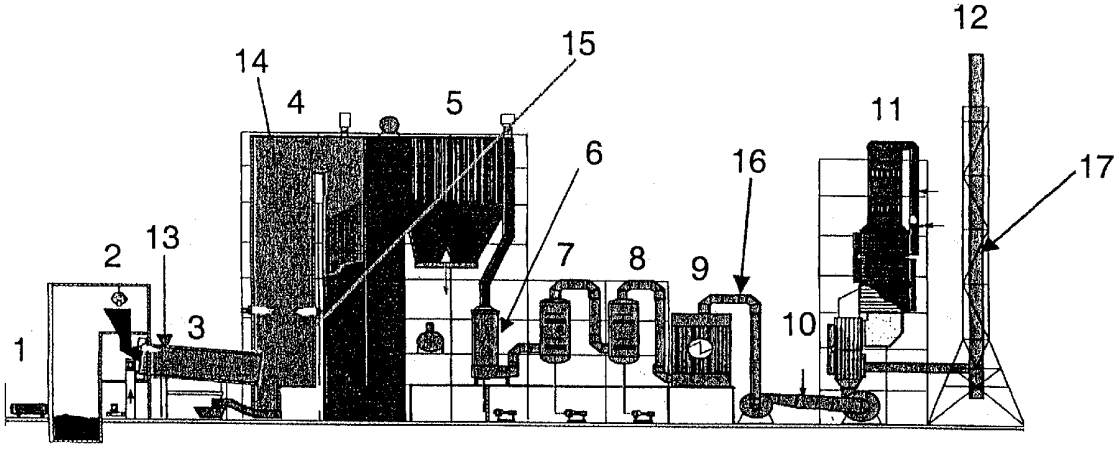

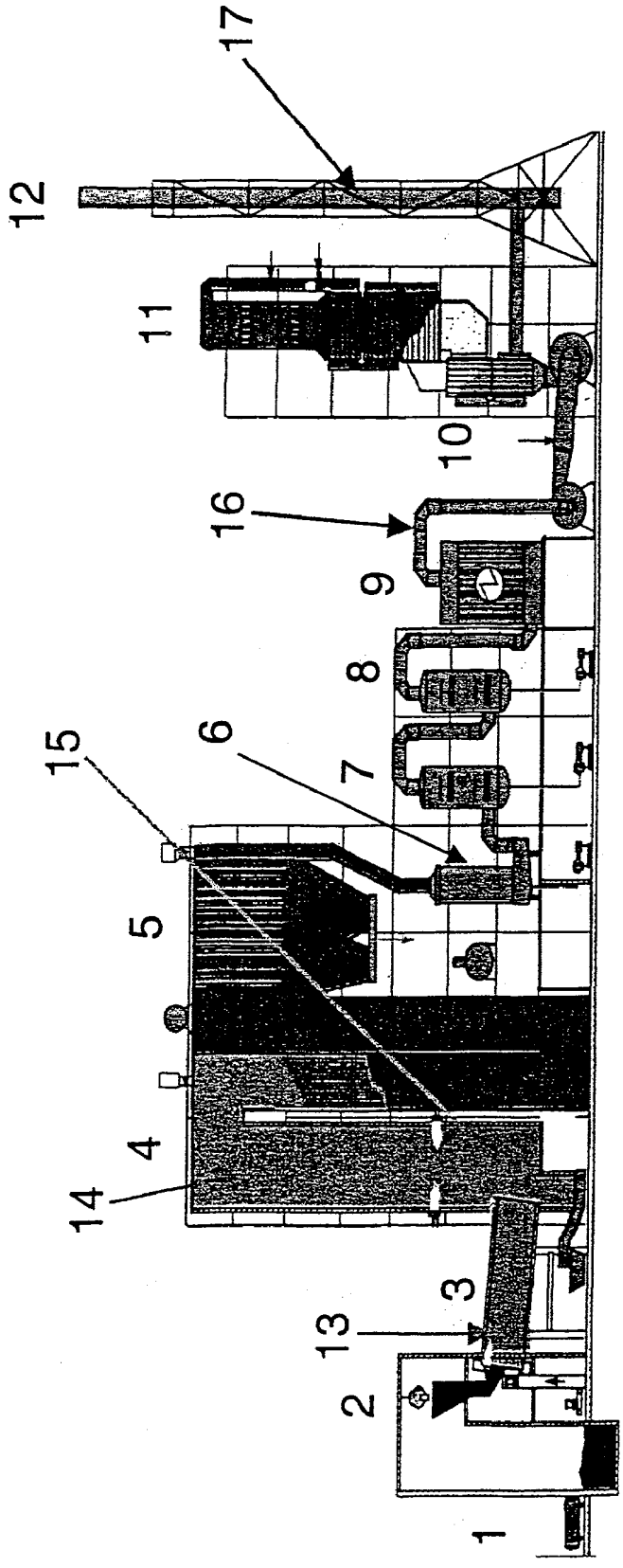

Fig. 1

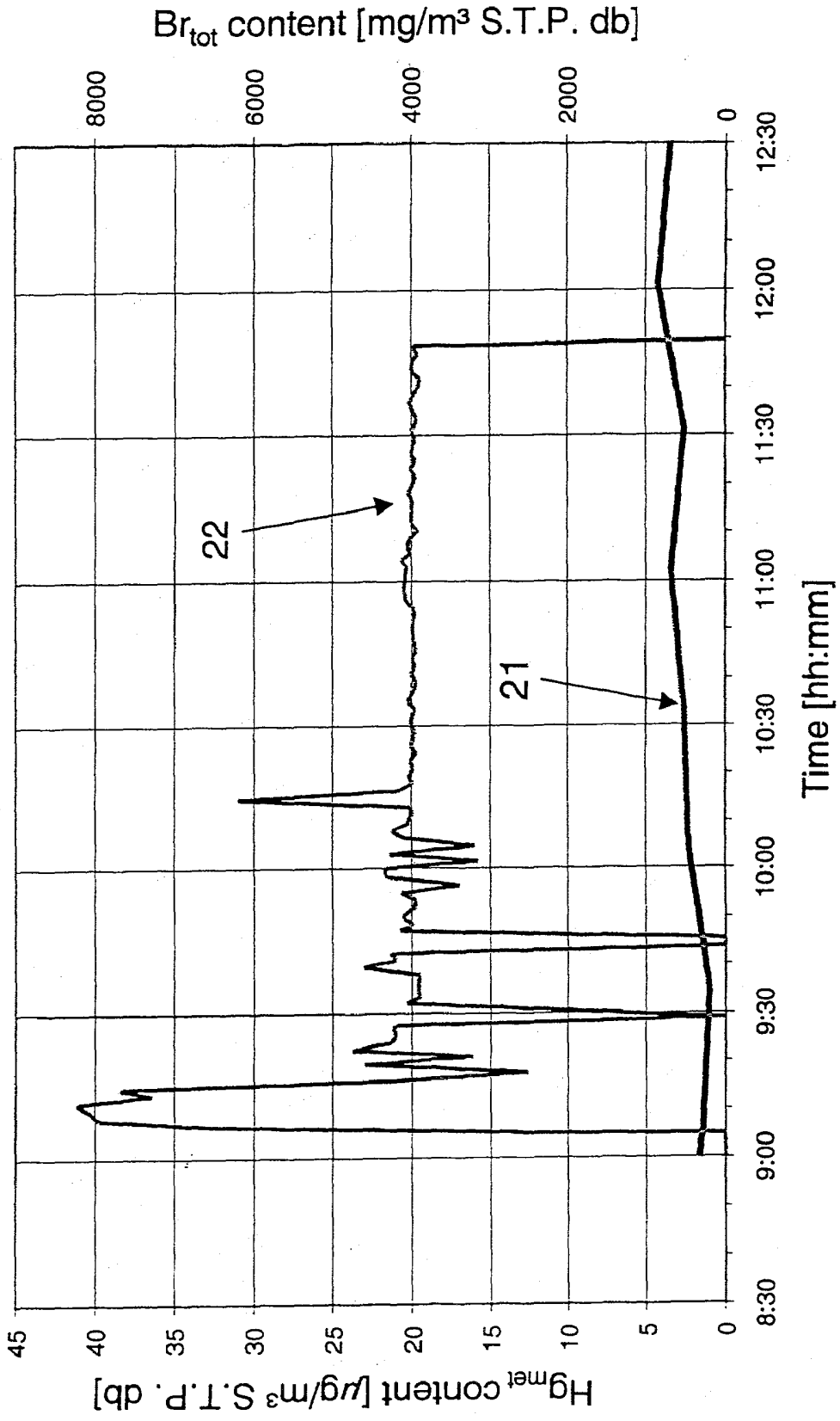
Br$_{tot}$ content [mg/m³ S.T.P. db]
8000
6000
4000
2000
0
22
21
Hg$_{met}$ content [µg/m³ S.T.P. db]
45
40
35
30
25
20
15
10
5
0
8:30
9:00
9:30
10:00
10:30
11:00
11:30
12:00
12:30
Time [hh:mm]

Fig. 2

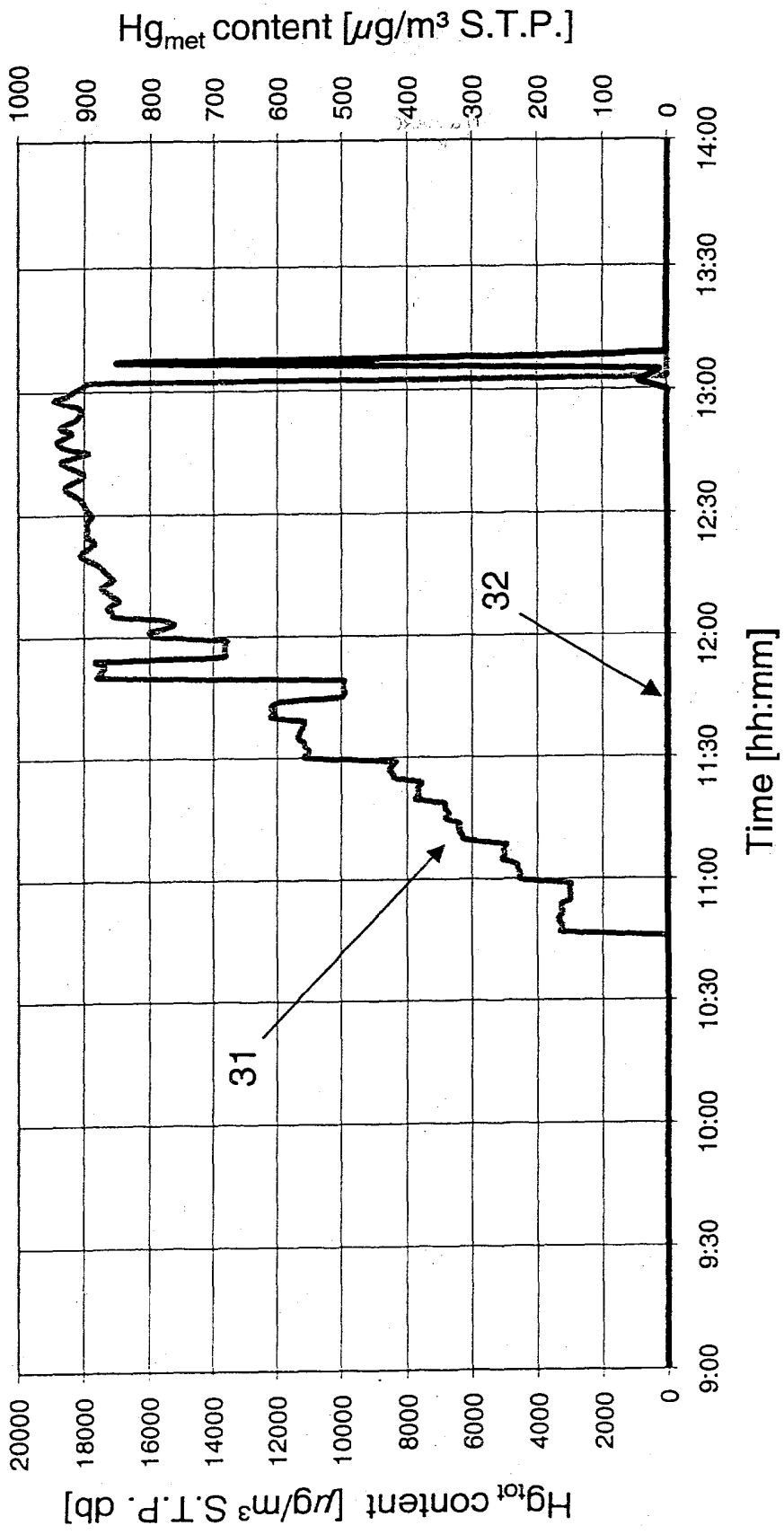
Hg$_{met}$ content [μg/m³ S.T.P.]
1000
900
800
700
600
500
400
300
200
100
0
Hg$_{tot}$ content [μg/m³ S.T.P. db]
20000
18000
16000
14000
12000
10000
8000
6000
4000
2000
0
9:00
9:30
10:00
10:30
11:00
11:30
12:00
12:30
13:00
13:30
14:00
Time [hh:mm]
31
32

Fig. 3

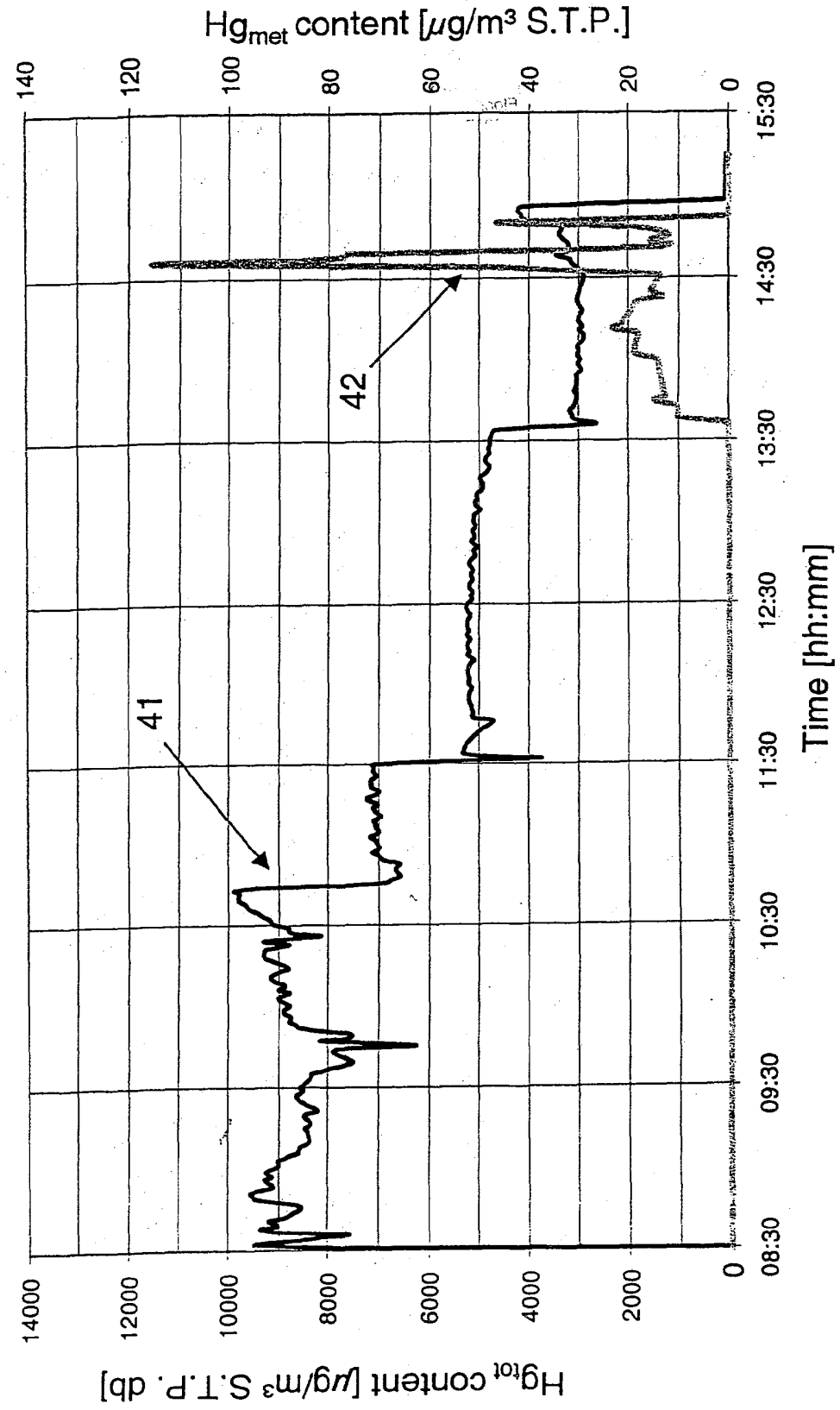
Hg$_{met}$ content [μg/m^3 S.T.P.]
140
120
100
80
60
40
20
0
14000
12000
10000
8000
6000
4000
2000
0
Hg$_{tot}$ content [μg/m^3 S.T.P. db]
41
42
08:30
09:30
10:30
11:30
12:30
13:30
14:30
15:30
Time [hh:mm]

Fig. 4

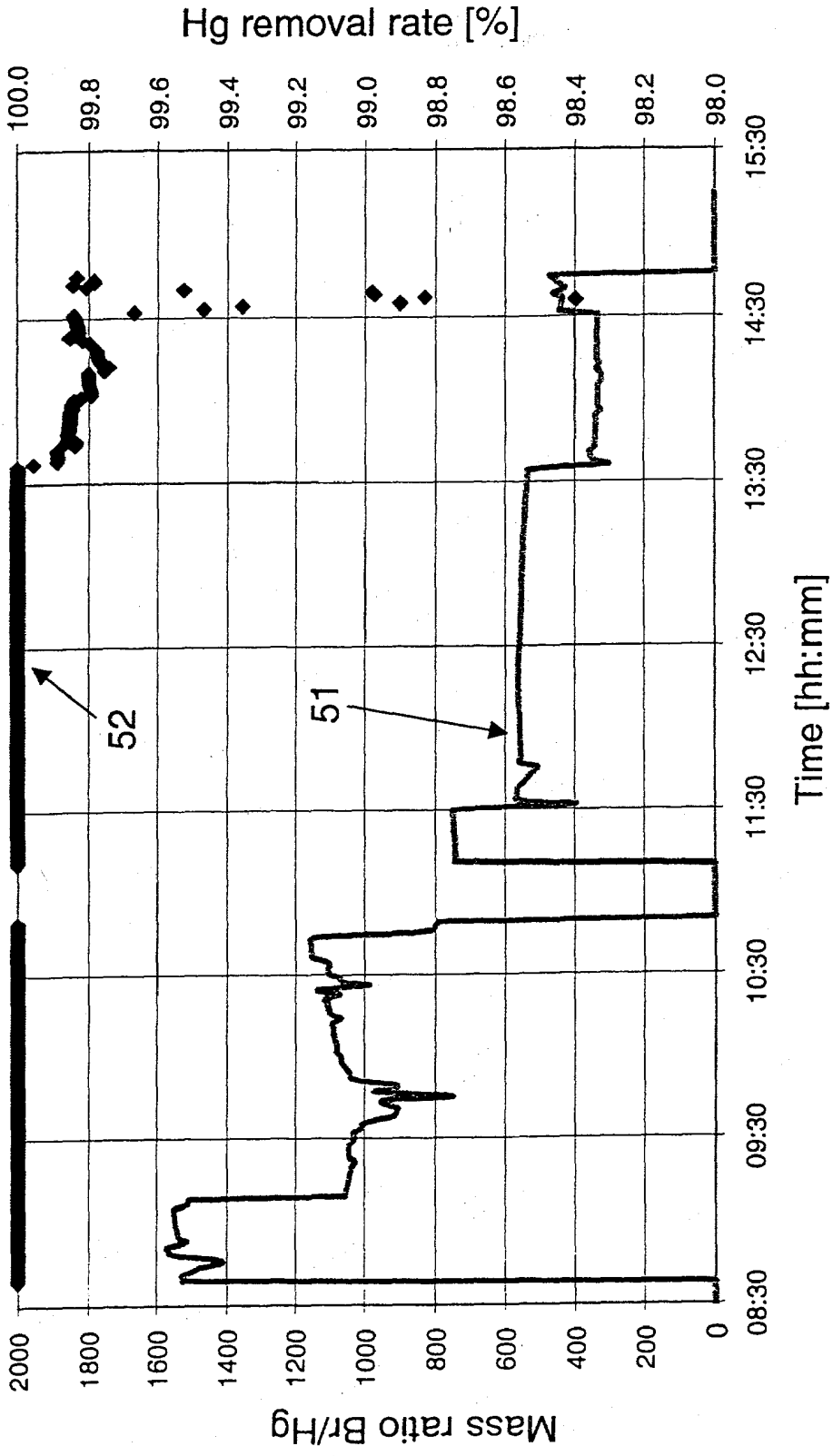
Hg removal rate [%]
100.0
99.8
99.6
99.4
99.2
99.0
98.8
98.6
98.4
98.2
98.0
52
51
2000
1800
1600
1400
1200
1000
800
600
400
200
0
Mass ratio Br/Hg
08:30
09:30
10:30
11:30
12:30
13:30
14:30
15:30
Time [hh:mm]

Fig. 5

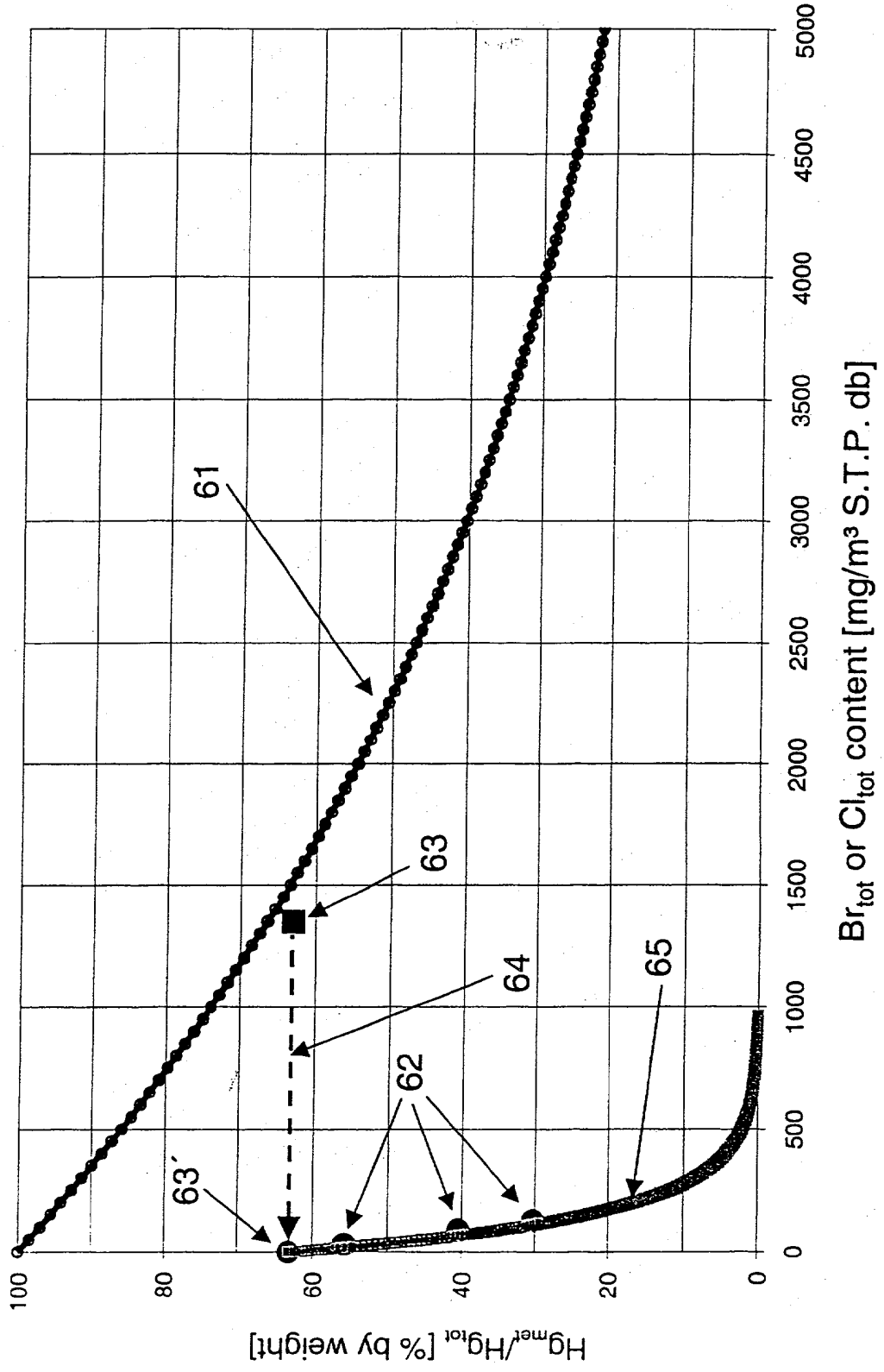
100
80
60
40
20
0
Hg$_{met}$/Hg$_{tot}$ [% by weight]
0
500
1000
1500
2000
2500
3000
3500
4000
4500
5000
Br$_{tot}$ or Cl$_{tot}$ content [mg/m^3 S.T.P. db]
61
62
63
63´
64
65

Fig. 6

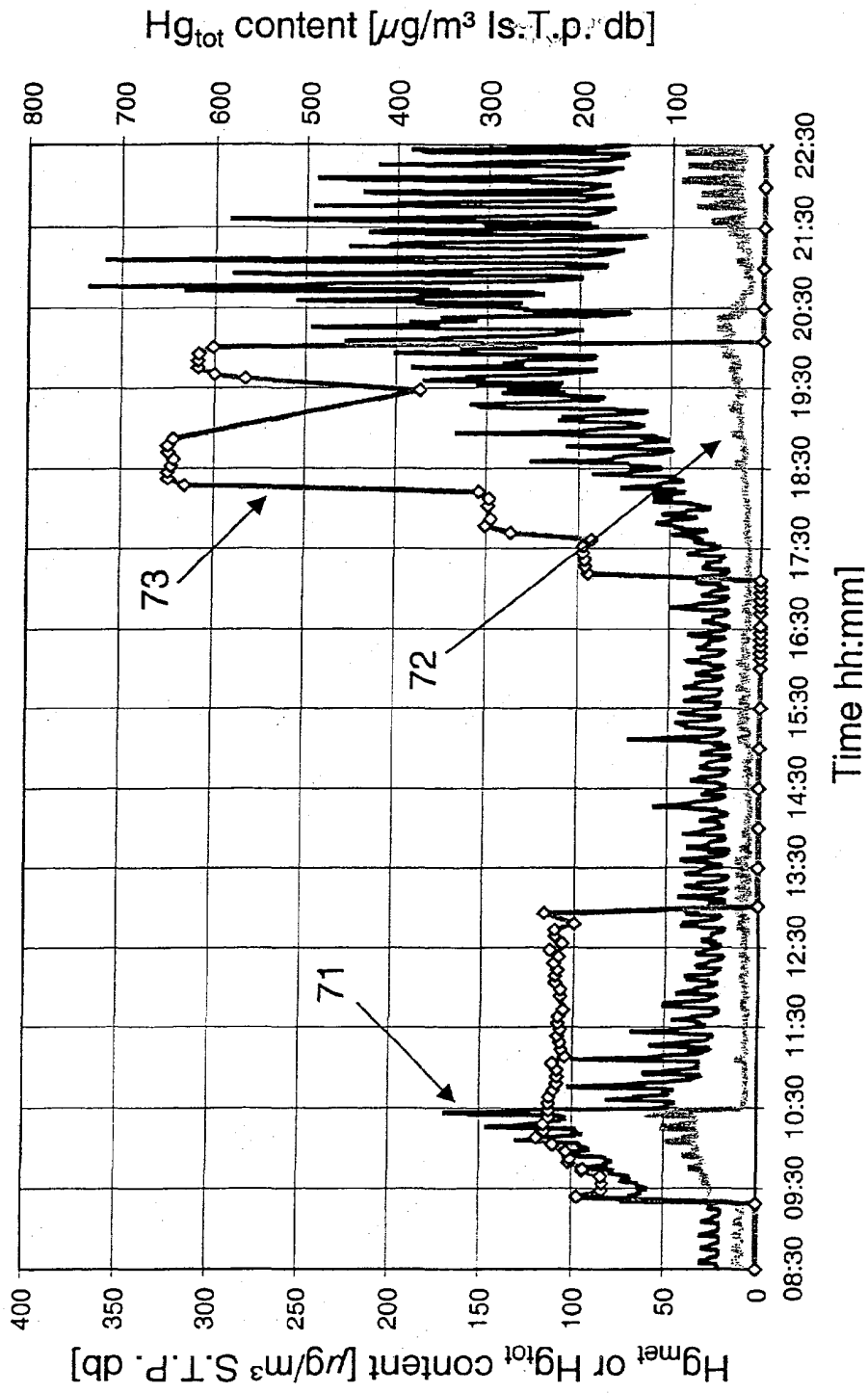
Hg$_{tot}$ content [μg/m³ Is.T.p. db]
800
700
600
500
400
300
200
100
0
400
350
300
250
200
150
100
50
Hg$_{met}$ or Hg$_{tot}$ content [μg/m³ S.T.P. db]
08:30
09:30
10:30
11:30
12:30
13:30
14:30
15:30
16:30
17:30
18:30
19:30
20:30
21:30
22:30
Time hh:mm]
71
72
73

Fig. 7

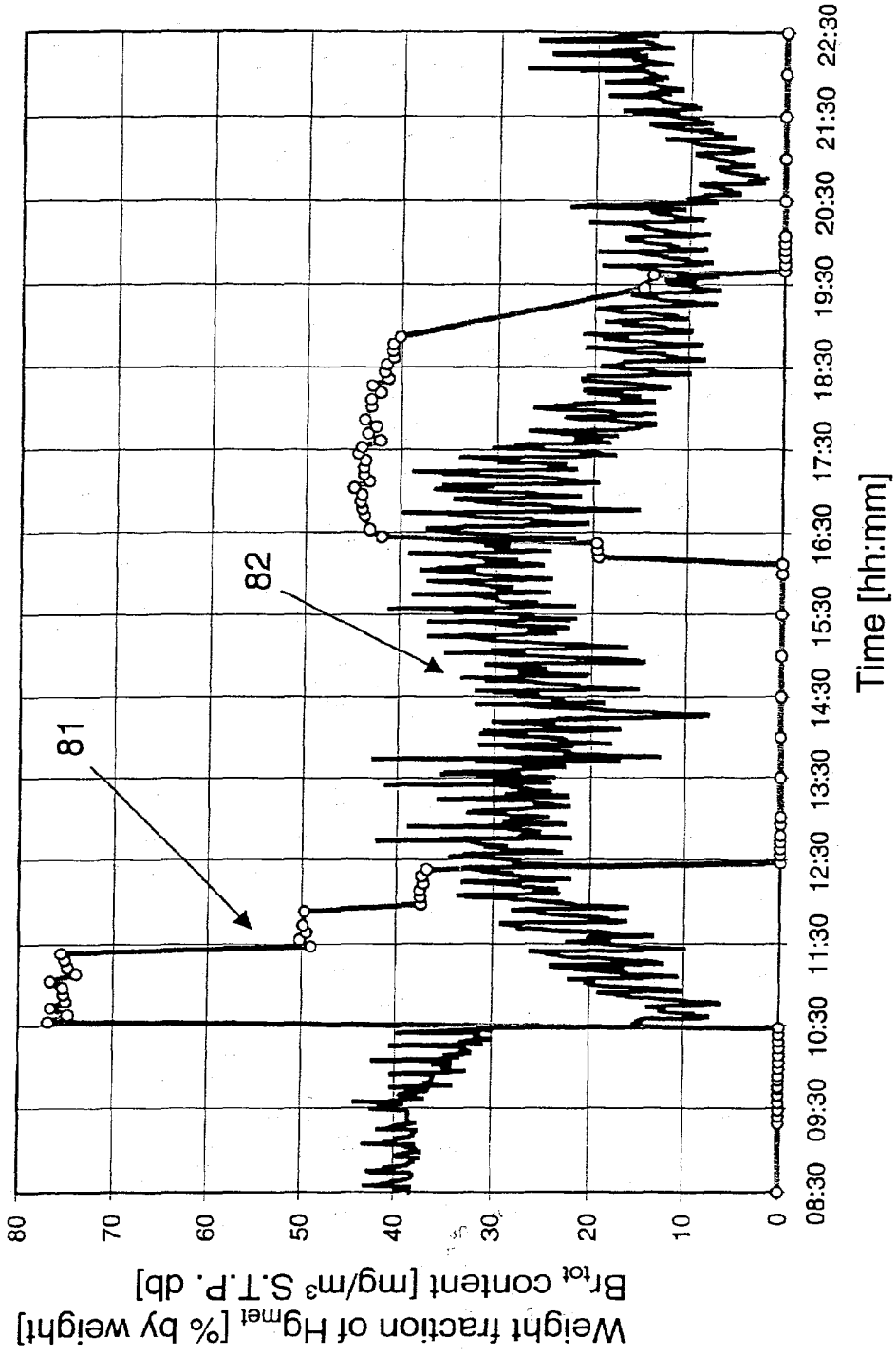
Weight fraction of Hg$_{mel}$ [% by weight]
Br$_{tot}$ content [mg/m^3 S.T.P. db]
80
70
60
50
40
30
20
10
0
08:30
09:30
10:30
11:30
12:30
13:30
14:30
15:30
16:30
17:30
18:30
19:30
20:30
21:30
22:30
Time [hh:mm]
81
82

Fig. 8

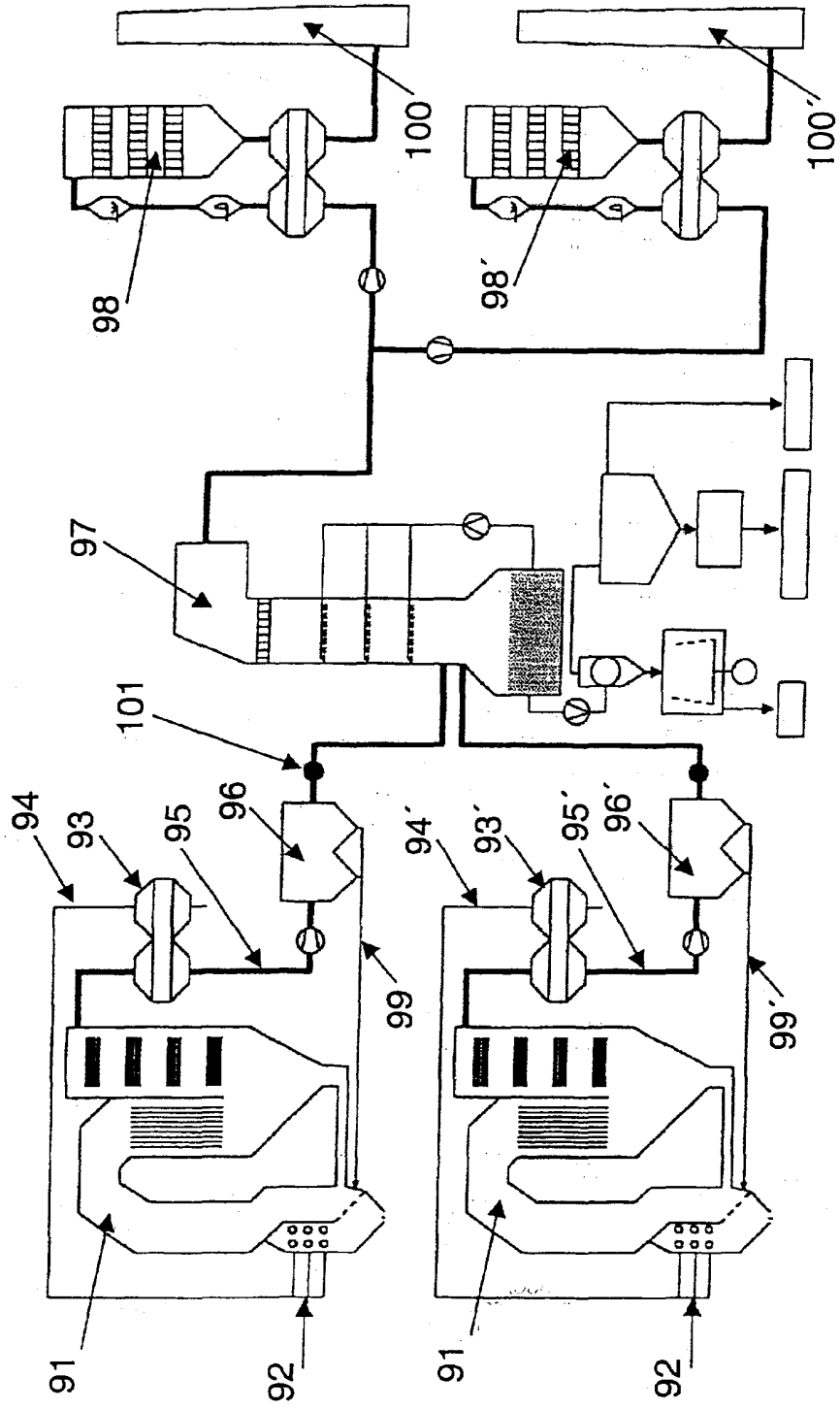

Fig. 9

PROCESS FOR REMOVING MERCURY FROM FLUE GASES

[0001] The invention relates to a process for removing mercury from flue gases of high-temperature plants, in particular power stations and waste incineration plants.

[0002] Owing to the high toxicity of mercury, in particular of organically bound mercury, which is also absorbed by humans directly or indirectly via the food chain, strict limiting values exist for the legally permissible emission of mercury, for example from incineration plants and power stations. Despite the currently already low mercury concentrations of clean gas,—the half-hourly mean value currently permissible in Germany for mercury emissions from waste incineration plants is 30 $\mu g/m^3$ S.T.P. dry basis (S.T.P. db),—owing to high volumetric flow rates, for example from large power stations, considerable mercury loadings are achieved, so that further reduction of the currently permitted limiting values is sought.

[0003] A range of processes for reducing mercury emissions from power stations, waste incineration plants or the like are known from the literature. Which of the processes is expedient for a particular application depends greatly on the introduced load and on the chlorine content of the material to be burned. At a high chlorine content the proportion of ionic mercury in the flue gas is high. Ionic mercury may be readily removed in scrubbers. The quasi-water-insoluble metallic mercury can be converted into ionic mercury, for example by adding oxidizing agents, such as peroxides, ozone or sodium chlorite, in the dirty boiler gas upstream of the flue gas emission control system or in the dedusted dirty boiler gas, and then removed in scrubbers. Further processes for removing mercury are: adding reactants, such as sodium tetrasulphite, to bind mercury by means of sulphur in the dirty boiler gas upstream of the flue gas emission control system or in partially cleaned up clean gas; improved scrubbing of ionic mercury by decreasing pH or pCl in the acid scrubber or by treatment with 1,3,5-triazine-2,4,6-trithiol (trimercapto-S-triazine, TMT) in the weakly acidic or weakly alkaline scrubber; removing ionic and metallic mercury by sorption with addition of pulverulent sorbents or atomized suspensions.

[0004] Previous techniques for reduction are not sufficiently effective and, owing to their sometimes high additional capital costs and the additional consumption of operating media are relatively expensive.

[0005] It is an object of the invention to provide a process for removing mercury, in particular for the substantially complete removal of mercury (Hg), from flue gases of high-temperature processes. The process is to find the broadest possible application, as in the case of essentially constant low Hg concentrations, for example in coal-fired power stations, but also in the case of relatively high Hg concentrations, for example in sewage sludge incineration, or very high Hg concentrations, for example in domestic waste or special waste incineration. Furthermore, the process should not require extensive refitting of the high-temperature plants and should require the smallest possible amount of additional operating media, so that the process can be implemented and operated inexpensively.

[0006] The invention relates to a process for removing mercury from flue gases of high-temperature plants, in particular from power stations and waste incineration plants, in which bromine and/or a bromine compound and/or a mixture of various bromine compounds is fed to the if appropriate multistage furnace and/or to the flue gas in a plant section downstream of the furnace, the temperature during the contact of the bromine compound with the flue gas being at least 500° C., preferably at least 800° C., the combustion taking place in the presence of a sulphur compound, in particular sulphur dioxide, with or without the addition of sulphur and/or a sulphur compound and/or of a mixture of various sulphur compounds, and then the flue gas being subjected to an if appropriate multistage cleanup for removing mercury from the flue gas, which cleanup comprises a wet scrubber and/or a dry cleanup.

[0007] The removal of mercury from the flue gases in a flue gas emission control system downstream of the combustion or a similar high-temperature process is critically dependent on what species of mercury is present prior to entry into the flue gas emission control system. As high a proportion as possible of ionic mercury is advantageous, since the ionic mercury is readily water soluble, that is to say it can be scrubbed out, and is readily adsorbable to a range of adsorbents. The addition of bromine or bromine compounds to the furnace causes, under the given conditions of a high-temperature process or the like, in the presence of a sulphur compound, in particular in the presence of sulphur dioxide, a substantial, essentially complete, oxidation of the mercury and therefore allows substantial removal of the mercury from flue gases.

[0008] High-temperature plants in the context of the present invention are taken to mean in particular waste incineration plants, for example domestic waste, special waste and sewage sludge incineration plants, and power stations, for example bituminous coal-fired or lignite-fired power stations, and also other plants for high-temperature processes, for example cement kilning, and high-temperature plants co-fired with waste or combined (multistage) high-temperature plants, for example power stations or cement rotary kilns having an upstream waste pyrrolysis or waste gasification. The dimension of the high-temperature plant is not important for the inventive process. The advantageous process is advantageous precisely because it is applicable to various types of high-temperature plants and to high-temperature processes of varying order of magnitude. This encompasses plants having a flue gas volumetric flow rate of only $15 \cdot 10^3$ m^3 S.T.P. db/h, for example for sewage sludge incineration, or of $50 \cdot 10^3$ m^3 S.T.P. db/h, for example in special waste incineration plants, or of $150 \cdot 10^3$ m^3 S.T.P. db/h, for example in domestic waste incineration, and also encompasses large power stations having, for example, $2\text{-}3 \cdot 10^6$ S.T.P. db/h.

[0009] It is not critical for the inventive process in what form the bromine supplied is present. It is possible to use free or organically bound or inorganically bound bromine. The bromine or the bromine compounds can be fed individually or in a mixture. Particularly preferably, an aqueous solution of hydrogen bromide or an alkali metal bromide, in particular sodium bromide, or an aqueous solution of the alkali metal bromide is used. This embodiment makes the process of particular economic interest, since the costs for additional operating media can be kept low. In addition preference is given to an embodiment in which the bromine compound or the mixture of various bromine compounds

consists of bromine-rich wastes, for example low or high halogenated liquid wastes, which are a component of the material to be incinerated or are added to the material to be incinerated, for example special waste.

[0010] The inventive process takes place in the presence of a sulphur compound. The addition of a bromine compound in accordance with the inventive process leads to a gas-phase reaction between mercury and bromine in the presence of sulphur dioxide. Since under the combustion processes and other high-temperature processes customary in the context of this invention, sulphur dioxide is generally formed, generally a sufficient supply of a sulphur compound is present for the inventive process. A sufficient supply in the context of this invention is present when, with addition of a bromine compound to the furnace, the content of sulphur dioxide in the flue gas upstream of the flue gas emission control system is significantly greater than zero. However, if in a combustion process sulphur dioxide is not formed, or sufficient sulphur dioxide is not formed, a sulphur compound must be fed to the process. This can be in the form of free or bound sulphur, for example sulphur granules, waste sulphuric acid or other high-sulphur wastes. In addition, in particular to decrease an excessive content of free halogens in the flue gas, a sulphur compound can also be added, if, for example, more bromine compound has been fed than is necessary to oxidize the mercury present. A sulphur compound can be added, for example, according to the process described in the patent application DE 10131464, which was unpublished at the priority date of the present application, for low-corrosion and low-emission co-combustion of high-halogenated wastes in waste incineration plants. According to this process, in the primary and/or secondary combustion chamber, sulphur or a corresponding sulphur source is added in a controlled manner. The amount of sulphur is controlled essentially in proportion to the instantaneous total halogen load introduced together with the wastes in the boiler flue gas. The added sulphur bums in the combustion chamber to form sulphur dioxide which leads within the boiler to a substantial suppression of free halogens in the boiler flue gas, which halogens are formed in the interim, and subsequently to stable halogen incorporation in the alkaline scrubber. The addition of sulphur is controlled in such a manner that the preset sulphur dioxide content in the flue gas at the boiler inlet or the preset sulphur dioxide residual content at the boiler exit, that is to say in the dirty boiler gas upstream of, for example, wet flue gas emission control, can be maintained via a simple primary control circuit in steady state operating conditions.

[0011] If specifically sodium bromide is added to the furnace, an increased consumption of sulphur dioxide is to be observed, which is due to the sulphation of the sodium bromide in the high-temperature region.

[0012] On the other hand, a relatively high content of a sulphur compound, in particular sulphur dioxide, in the flue gas is not a disadvantage for the inventive process. A high content of sulphur dioxide can occur, for example, in the combustion of bituminous coals which customarily contain from 0.5 to 1% by weight of sulphur, or in the event of controlled addition of a sulphur compound which is added to suppress free halogens formed in the interim (see above). Under the given conditions of a high-temperature process, in the presence of excess sulphur dioxide, mercury oxidation also takes place, which is achieved by the inventive process by adding one or more bromine compounds. Herein is a particular advantage of the present process, since the oxidation of mercury by adding bromine compounds is found to be substantially insensitive to an excess of sulphur dioxide, unlike that due to the addition of chlorine compounds.

[0013] The addition of a bromine compound and if appropriate a sulphur compound is made according to the invention to the furnace and/or to the flue gas in a plant section downstream of the furnace, the temperature during contact of the bromine compound with the flue gas being at least 500° C., preferably at least 800° C. The bromine compound, for example, sodium bromide, can be added in solid form, for example as salt, or liquid form, for example as aqueous solution, to the waste mixture, coal or the like to be burnt, upstream of the furnace. The addition can also be made to a plant section upstream of the furnace, for example a pyrolysis drum, which serves, for example, for the thermal breakdown of co-incinerated waste materials, or to a coal mill. The compound can also be fed during the combustion process. If the furnace comprises a plurality of stages, for example a primary and a secondary furnace, the bromine compound can be introduced, likewise in solid or liquid form, into one or both combustion chambers, for example into the rotary kiln and/or the afterburning chamber. Preferably, an aqueous solution of the compound is sprayed into one of the combustion chambers. In addition, it can also be added after the combustion, for example in a downstream waste-heat boiler, provided that the flue gas temperature is sufficiently high, that is to say at least 500° C., in particular at least 800° C. In other high-temperature processes, for example cement kilning, the hot oven top of the cement rotary kiln and/or the fired deacidification stage of the downstream cement raw mill preheater, for example, are supplied with the bromine compound.

[0014] In a further embodiment of the inventive process, it is also possible to feed the bromine compound, for example an aqueous solution of hydrogen bromide or sodium bromide, at a fine dispersion to the combustion air and/or if appropriate to a recirculated substream, in particular recirculated flue gas, recirculated ash and recirculated fly ash.

[0015] In order to achieve mercury oxidation as complete as possible, in particular 100%, by adding a bromine compound, the bromine compound is preferably added in a mass ratio of bromine to mercury in the range from 10^2 to 10^4. If the bromine compound is added in a great excess, this does not have a disadvantageous effect on the inventive process. Too great an excess must be avoided, however, not least for reasons of cost. If appropriate, free halogens formed in the interim, for example free bromine, must be suppressed or incorporated in a stable manner by adding a sulphur compound (see above), since bromine emissions are generally also subject to legally established limiting values.

[0016] Mercury can in principle also be oxidized by chlorine compounds or iodine compounds. However, it has been found that bromine compounds oxidize mercury more effectively under the given conditions of high-temperature processes, such as temperature and in particular also at a high sulphur dioxide content (see above) than chlorine compounds. Iodine compounds oxidize mercury more effectively compared with bromine compounds. However, from economic aspects, bromine compounds are preferably used

in the inventive process. Chlorine compounds or iodine compounds possibly present in the wastes, for example in special waste, therefore contribute to mercury oxidation. In a preferred embodiment, the inventive process proceeds, in addition to the bromine compounds, in the presence of chlorine and/or iodine and/or a chlorine compound and/or an iodine compound and/or a mixture of such compounds. The chlorine compound and/or iodine compound can be fed, for example, in the form of high-chlorine or high-iodine wastes as a supplement to, or partial replacement of, the added bromine compound.

[0017] According to the inventive process, after the combustion or similar high-temperature process with addition of a bromine compound, cleanup of the flue gas occurs, as a result of which the oxidized mercury is removed from the flue gas as thoroughly as possible. Various flue gas cleanup processes are known from the prior art for removing, inter alia, ionic mercury. They are based either on wet scrubbing or dry cleanup or a combination of the two and may be multistage. Wet scrubbing comprises, for example, an acid scrubbing, which is performed, for example, in a quench sprayed with circulated scrubbing water, a pressurized nozzle scrubber or rotary atomizer scrubber or a packed-bed scrubber. Scrubbing can also be carried out, if appropriate, under weakly acidic or alkaline conditions only, for example in the case of low hydrogen chloride loads, but high sulphur dioxide loads.

[0018] In a preferred embodiment, the flue gas emission control system comprises multistage wet flue gas scrubbing having at least one strongly acid (pH less than 1) and/or at least one weakly acid and/or at least one alkaline scrubbing stage.

[0019] The flue gas emission control system can also comprise a dry emission control system based on the adsorption of ionic mercury compounds. Such a cleanup can be carried out, for example, by semi-dry desulphurization in a spray-dryer which is impinged with a milk of lime/carbon suspension, or using fixed-bed adsorbers, for example based on granulated activated carbon or oven coke or mixtures of such adsorbers with granular lime, or using pneumatic adsorbers, for example electrostatic precipitators (ESPs), or using cloth filters which are impinged with a blown-in finely pulverulent slaked lime/activated carbon or slaked lime/oven coke mixture. Zeolites are also suitable for removing mercury compounds. With respect to dry flue gas emission control, a further advantage is exhibited of the inventive process. The use of the process is of interest in particular for those high-temperature plants which do not have a wet flue gas emission control system, but solely have a dry emission control system having a mercury sorption stage. Mercury bromide $HgBr_2$ adsorbs more strongly to dry sorbents than mercury chloride $HgCl_2$. For example, mercury adsorption intensifies on the fly ash of ESPs.

[0020] In a preferred embodiment the flue gas emission control system therefore comprises at least one dry or semi-dry adsorption-based emission control stage, in particular using electrostatic or filtering dust separators.

[0021] Furthermore, the fly ash loaded with mercury from any dust separators present is given a secondary, preferably thermal, treatment to decrease mercury load, in particular in a rotary drum heated to temperatures of at least 200° C.

[0022] Preferably, in the inventive process, the mercury content of the flue gas, in particular the content of metallic mercury, is measured continuously downstream of the flue gas emission control system and on the basis of the measured mercury content the amount of bromine fed and/or bromine compounds and/or the mixture of bromine compounds and if appropriate sulphur and/or sulphur substances and/or the mixture of sulphur substances is controlled. A relatively high content of metallic mercury in the flue gas is an indicator for the fact that the oxidation of mercury is proceeding incompletely and thus the mercury is being removed incompletely in the flue gas emission control system. In order to oxidize mercury as completely as possible, in such a case more bromine compound must be fed. In addition, the content of ionic mercury downstream of the flue gas emission control system can be measured and the degree of removal of ionic mercury in the flue gas emission control system can be determined therefrom. The content of metalllic mercury and if appropriate of total mercury in the dirty boiler gas can be measured, for example, using a differential absorption photometer, after appropriate gas treatment. Continuous measurement of metallic mercury, and if appropriate also of total mercury in the clean gas downstream of the wet and/or dry flue gas emission control system is performed preferably before any downstream SCR denitration plant present (SCR: selective catalytic reduction), since the metal oxide-rich fixed-bed catalyst adsorbs considerable amounts of metallic mercury.

[0023] The invention is described in more detail below on the basis of the examples with reference to the accompanying drawings. In the drawings

[0024] **FIG. 1** shows a diagram of a special waste incineration plant

[0025] **FIG. 2** shows a diagram which plots the content of metallic mercury (Hgmet) in the scrubbed boiler flue gas, that is to say in the clean gas, downstream of the wet scrubber, in $\mu g/m^3$ S.T.P. db (curve **21**, left y axis) and the content of total bromine (Br_{tot}) in the boiler flue gas in mg/m^3 S.T.P. db (curve **22**, right y axis) as a function of time,

[0026] **FIG. 3** shows a diagram which plots the content of total mercury (Hg_{tot}) in the boiler flue gas, that is to say also the dirty boiler gas, upstream of the wet scrubber, in $\mu g/m^3$ S.T.P. db (curve **31**, left y axis) and the content of metallic mercury (Hg_{met}) in the clean gas downstream of the wet scrubber, in $\mu g/m^3$ S.T.P. db (curve **32**, right y axis), as a function of time,

[0027] **FIG. 4** shows a diagram which plots the content of total bromine (Br_{tot}) in the boiler flue gas, that is to say also the dirty boiler gas, upstream of the wet scrubber, in mg/m^3 S.T.P. db (curve **41**, left y axis) and the content of metallic mercury (Hg_{met}) in the clean gas downstream of the wet scrubber, in $\mu g/m^3$ S.T.P. db (curve **42**, right y axis) as a function of time,

[0028] **FIG. 5** shows a diagram which plots the mass ratio of bromine to mercury in the boiler flue gas (curve **51**, left y axis) and the total degree of mercury removal achieved in the multistage wet scrubber, in % (curve **52**, right y axis) as a function of time,

[0029] **FIG. 6** shows a diagram which plots the weight ratio of metallic mercury to the total of metallic and ionic mercury (Hg_{met}/Hg_{tot}), that is to say the proportion of Hg_{met} species in the dirty boiler gas, in % by weight as a function

of total chlorine content (curve **61**) and of total bromine content (curve **62**) in the dirty boiler gas, in mg/m^3 S.T.P. db,

[**0030**] **FIG. 7** shows a diagram which plots the total mercury content (Hg_{tot}) in the dedusted dirty gas downstream of the electrostatic precipitator (curve **71**, left y axis) and the content of metallic mercury (Hg_{met}) downstream of the electrostatic precipitator (curve **72**, left y axis) and the increase in total mercury content (Hg_{tot}) in the boiler flue gas induced by mercury addition (curve **73**, right y axis) as a function of time,

[**0031**] **FIG. 8** shows a diagram which plots the weight ratio of metallic mercury (Hg_{met}) to the total of metallic and ionic mercury (Hg_{tot}), that is to say the proportion of Hg_{met} species (Hg_{met}/Hg_{tot}) in the dedusted dirty boiler gas downstream of the electrostatic precipitator, in % by weight (curve **82**) and the total bromine content (Br_{tot}) in the boiler flue gas, in mg/m^3 S.T.P. db (curve **81**) as a function of time,

[**0032**] **FIG. 9** shows a diagram of an industrial power station having two slag-tap fired boilers.

EXAMPLES

[**0033**] Examples 1-4 have been carried out in a special waste incineration plant of Bayer AG in Leverkusen corresponding to the diagram in **FIG. 1**. The rotary kiln **3** as primary combustion chamber is fired with solid waste from the bunker **1** via a crane grab **2**, with liquid waste from a liquid waste tank and with waste packagings via a package feed. The afterburning chamber **4**, as a secondary combustion chamber, is also fired with liquid waste. The flue gas is cooled via the waste-heat boiler **5** and then, as what is termed dirty boiler gas, fed to the wet flue gas emission control system (multistage scrubber), which encompasses a quench **6**, an acid rotary atomizer scrubber **7**, an alkaline rotary atomizer scrubber **8** and an electrostatic gas cleanup system involving partial condensation of steam **9**. Via suction fans **10** the scrubbed dirty gas, as what is termed clean gas, passes into the downstream catalytic denitration plant **11** (selective catalytic denitration of the clean gas by means of ammonia) and is emitted from there via the stack **12**. The metallic mercury content (Hg_{met}) and if appropriate the total mercury content (Hg_{tot}) in the scrubbed clean gas downstream of the ESP/partial condensation was, after appropriate treatment, determined continuously at the measuring point **16** using a differential absorption photometer. The total mercury content (Hg_{tot}) in the emitted clean gas was determined semi-continuously at the measuring point **17**, that is to say at a stack height of 22 m, by amalgamation on a gold film heated at intervals using the following differential absorption photometer.

[**0034**] Example 5 describes the use of the inventive process in a coal-fired power station of Bayer AG in Uerdingen, which essentially consists of a slag-tap fired boiler and a flue gas emission control system typical of a power station consisting of a dry electrostatic precipitator (ESP), a weakly acidic wet scrubber based on limestone for flue gas desulphurization and an SCR denitration plant (SCR: selective catalytic reduction).

Example 1

[**0035**] Over a period of 116 minutes, a series of samples of metallic mercury in plastic capsules (in total 3400 g, see Table 1) were fed to the secondary combustion chamber (afterburning chamber **4**) via the inspection port **15**. The feed was performed at intervals of approximately 5-10 minutes with increasing amount of mercury. The mercury introduced vaporizes within approximately 2-4 minutes; therefore, the instantaneous peak mercury concentrations occurring in the boiler flue gas at a volume flow rate of approximately $45 \cdot 10^3$ m^3 S.T.P. db/h can be estimated. The estimation at the end of the experiment gives peak mercury concentrations of more than $130 \cdot 10^3$ μg/m^3 S.T.P. db.

TABLE 1

Addition of Hg samples			
Time	Hg amount [g]	Time	Hg amount [g]
9:24	5	10:32	180
9:32	10	10:37	200
9:38	15	10:43	220
9:49	20	10:48	240
9:54	40	10:53	260
9:59	60	10:58	280
10:04	80	11:03	300
10:09	100	11:08	310
10:15	120	11:13	320
10:20	140	11:20	340
10:26	160		
	Experimental time [min]		Total Hg amount [g]
	116		3400

[**0036**] During the experimental period, by co-combustion of a highly brominated liquid waste (addition to the rotary kiln head) in the boiler flue gas of $45 \cdot 10^3$ m^3 S.T.P. db/h, a bromine content of approximately $4 \cdot 10^3$ mg/m^3 S.T.P. db was maintained, as shown by curve **22** (right y axis) in **FIG. 2** (determined on the basis of throughput and bromine content of the highly brominated liquid waste). The residual SO_2 content in the dirty boiler gas upstream of the quench was here set unusually high to $5.5 \cdot 10^3$ mg/Nm^3 S.T.P. db by adding sulphur granules to the rotary kiln head (direct SO_2 measurement in the dirty boiler gas upstream of the quench). This ensured that a sufficient supply of sulphur dioxide for the inventive process was available. The remaining material for combustion consisted of solid wastes and low-chlorinated solvents. Before, during and after the addition of mercury, at measurement point **16**, that is to say downstream of the flue gas emission control system, the content of mercury in the flue gas was measured. As curve **21** (left y axis) in **FIG. 2** shows, despite the addition of considerable amounts of mercury, the content of metallic mercury passing through the scrubber virtually does not increase.

[**0037**] Furthermore, Table 2 lists the instantaneous discharge rates of mercury at 11:30, that is to say shortly after addition of the last mercury sample and thus at the timepoint of the highest mercury concentration, which were discharged with the effluent scrubbing waters of the wet flue gas emission control system. Extensive wastewater-side measurements confirm that approximately 99.93% of the total mercury discharged were discharged as ionic mercury together with the wastewater of the strongly acid quench (pH less than 1) and approximately 0.066% were discharged with the wastewater of the alkaline rotary atomizer scrubber (pH approximately 7.5). The small residue, not scrubbed out, of only 0.004% of the total mercury discharged was discharged as metallic mercury together with the scrubbed

clean gas. Virtually no Hg_{ion} was detectable in the scrubbed clean gas (Hg_{ion}=zero, that is to say complete scrubbing of ionic mercury and thus $Hg_{tot}=Hg_{met}$).

TABLE 2

Instantaneous mercury discharge rates [g/h] at 11:30	
Quench (including the acid rotary atomizer scrubber)	1931
(Acid rotary atomizer scrubber, effluent of which is recirculated to the quench)	(468)
Alkaline rotary atomizer scrubber	1.32
Scrubbed clean gas downstream of ESP/condensation	0.069

Example 2

[0038] Over a period of 130 minutes, an aqueous $HgCl_2$ solution was fed continuously to the secondary combustion chamber (afterburning chamber **4**) via a nozzle in the afierburning chamber roof. The rate added was increased here at intervals of about 5 minutes. **FIG. 3** shows the increase in mercury concentration thus induced in the boiler flue gas in the time between approximately 10:45 and 13:00. The mercury introduced is immediately released in the afterburning chamber as metallic mercury Hg_{met}. The total mercury concentration in the boiler flue gas increased in this manner to values of $18\cdot10^3$ $\mu g/m^3$ S.T.P db (curve **31** and left y axis). The Hg concentration in the boiler flue gas was calculated from the mercury addition rate and the flue gas volume flow rate measured operationally. During the experimental period, by co-incineration of a highly brominated liquid waste (addition via a burner at the rotary kiln head) a bromine content of approximately $9\cdot10^3$ mg/m^3 S.T.P. db was maintained in the boiler flue gas of $45\cdot10^3$ m^3 S.T.P. db/h (determination based on throughput and bromine content of the co-incinerated highly brominated liquid waste). The residual SO_2 content in the dirty boiler gas upstream of the quench was set here by adding sulphur granules to the rotary kiln head to approximately $4\cdot10^3$ mg/Nm^3 S.T.P. db (direct SO_2 measurement in the dirty boiler gas upstream of the quench).

[0039] In the period between approximately 11:00 and 13:00, in the scrubbed clean gas downstream of the ESP/condensation, a concentration of metallic mercury of less than 10 $\mu g/m^3$ S.T.P. db was found. Here also virtually no HG_{ion} was detectable in the scrubbed clean gas (Hg_{ion}=zero, that is to say complete scrubbing of the ionic mercury and thus $Hg_{tot}=Hg_{met}$). During a brief loss of bromine addition at 13:05, the concentration of Hg_{met} jumped to approximately 800 $\mu g/m^3$ S.T.P. db, but immediately returned to its low starting value of less than 10 $\mu g/m^3$ S.T.P. db when bromine addition started again (curve **32** and right y axis).

Example 3

[0040] In the time between approximately 8:30 and 14:45, that is say over a period of 675 minutes, an aqueous $HgCl_2$ solution was fed continuously to the secondary combustion chamber (afterburning chamber **4**) via a nozzle in the afterburning chamber roof. However, the Hg flowrate added was this time kept constant, corresponding to a mercury concentration in the boiler flue gas of approximately $9.6\cdot10^3$ $\mu g/m^3$ S.T.P. db.

[0041] In this experimental period (see **FIGS. 4 and 5**), bromine was added in the form of a highly brominated liquid waste via a burner at the rotary kiln head, but the added bromine flowrate was decreased stepwise, which decreased the bromine content in the boiler flue gas stepwise from approximately $9\cdot10^3$ to approximately $3\cdot10^3$ mg/m^3 S.T.P. db (curve **41** in **FIG. 4** and left y axis). The residual SO_2 content in the dirty boiler gas, induced by adding sulphur granules, was again selected very high at approximately $4.3\cdot10^3$ mg/m^3 S.T.P. db in this experimental period. In addition to the highly brominated liquid waste, a chlorinated liquid waste was also co-incinerated.

[0042] As can be seen in **FIG. 4** and **FIG. 5**, the metallic mercury content in the scrubbed clean gas downstream of the ESP condensation was significantly less than 2 $\mu g/m^3$ S.T.P. db (curve **42** in **FIG. 4** and right y axis). Here also virtually no Hg_{ion} was detectable in the scrubbed clean gas (Hg_{ion}=zero, that is to say complete scrubbing of the ionic mercury and thus $Hg_{tot}=Hg_{met}$). Correspondingly, the degree of removal of mercury in the wet scrubber was significantly greater than 99.98% (curve **52** in **FIG. 5** and right y axis), as long as the bromine content was greater than $3\cdot10^3$ mg/m^3 S.T.P. db (curve **41** and left y axis) or the bromine/mercury mass ratio was greater than 500 μg of bromine/μg of mercury (curve **51** in **FIG. 5** and left y axis). At about 13:30 the bromine content in the flue gas decreases to $3\cdot10^3$ mg/m^3 S.T.P. db and the bromine/mercury mass ratio to approximately 335 μg of bromine/μg of mercury. The metallic mercury concentration downstream of the wet scrubber increases here to up to 20 $\mu g/m^3$ S.T.P. db (curve **42** in **FIG. 4** and left y axis) and the Hg removal rate decreases to 99.8% (curve **52** in **FIG. 5** and right y axis). Furthermore, a brief interruption in chlorine addition shortly after 14:30 leads to a peak concentration of metallic mercury downstream of the scrubber of approximately 117 $\mu g/m$ **3** S.T.P. db (curve **42** in **FIG. 4** and left y axis) and to a brief fall in removal rate to approximately 98.4% (curve **51** in **FIG. 5** and right y axis). The comparatively small effect of chlorine compared with bromine is marked here.

Example 4

[0043] **FIG. 6** illustrates an experiment comparing the action of bromine and chlorine on the oxidation of mercury in the boiler flue gas of the abovedescribed special waste incineration plant. In this study, an Hg_{tot} content set by adding $HgCl_2$ of 130 $\mu g/m^3$ S.T.P. db was available at a chlorine content (Cl_{tot}) set by co-incineration of low-chlorine solvent in the boiler flue gas at $1.35\cdot10^3$ mg/m^3 S.T.P. db and at a residual sulphur dioxide content in the dirty boiler gas set by adding sulphur granules of $1.5\cdot10^3$ mg/m^3 S.T.P. db. Measurement point **63** shows the proportion of Hg_{met} species achieved initially without bromine addition, that is to say solely via chlorine, of approximately 63% by weight in the dirty boiler gas upstream of the wet scrubber. The plant-specific curve **61** which is based on approximately **20** operational experiments on a special waste incineration plant with incineration of highly chlorinated liquid waste shows how the proportion of Hg_{met} species (Hg_{met}/Hg_{tot}) decreases with increasing chlorine content Cl_{tot} in the boiler flue gas.

[0044] Starting from a proportion of Hg_{met} species of approximately 63% by weight in the dirty boiler gas upstream of the wet scrubber (measurement point **63** with

Cl_{tot} content as x axis and measurement point **63'** with Br_{tot} content as x axis), an increasing amount of a bromine compound was then added in three steps (see arrow **64** which marks the transition from the plot of the proportion of Hg_{met} species as a function of Cl_{tot} content to the plot as a function of Br_{tot} content). The bromine content in the boiler flue gas was increased here from initially 0 mg/m^3 S.T.P. db (measurement point **63'** with Br_{tot} content as x axis) by adding aqueous hydrogen bromide solution or aqueous sodium bromide solution (injection on the afterburning chamber roof **14**, **FIG. 1**) in three steps to 50, 100 and 120 mg/m^3 S.T.P. db (measurement point **62** with Br_{tot} content as x axis). In this experiment the proportion of Hg_{met} species (Hg_{met}/Hg_{tot}) in the dirty boiler gas upstream of the wet scrubber (starting from approximately 63% by weight) decreased to 30% by weight.

[0045] The comparison is evidence for the markedly more effective oxidation of mercury by bromine compounds compared with chlorine compounds in the example of a special waste incineration plant. To achieve a proportion of Hg_{met} species of only 30% using chlorine alone, the Cl_{tot} content, according to the chlorination curve **61**, would have to be increased to $4 \cdot 10^3$ mg/m^3 S.T.P. db. Instead of this, this is achieved using only 120 mg/m^3 S.T.P. db of bromine. Bromine therefore appears to be about 25 fold more active than chlorine. The Hg bromination curve **65** (Br_{tot} content as x axis), taking into account this factor, corresponds to the completely measured Hg chlorination curve **61** (Cl_{tot} content as x axis). The same applies to the case of power station flue gases where, however, the plant-specific Hg chlorination curve and the corresponding Hg bromination curve **65** are shifted to substantially lower halogen contents.

Example 5

[0046] **FIGS. 7 and 8** illustrate experiments to demonstrate the effect of bromine on mercury removal in a coal-fired power station of Bayer AG in Uerdingen (see **FIG. 9**).

[0047] In the coal-fired power station, an experiment was carried out with addition of aqueous $HgCl_2$ solution and aqueous NaBr solution into the combustion chamber to demonstrate the effect of bromine on Hg oxidation. The power station comprises two parallel slag-tap fired boilers **91**, **91'** having temperatures in the combustion chamber around 1450° C. The slag-tap fired boilers **91**, **91'** are charged with coal **92**, **92'**. Via the respective air preheaters **93**, **93'**, fresh air **94**, **94'** is fed to the slag-tap fired boilers **91**, **91'**. The dirty boiler gas **95**, **95'** is fed via electrostatic precipitators (ESPs) **96**, **96'** to the shared weakly acidic (pH=5.3) wet scrubbers as flue gas desulphurization system (FGD scrubbers) **97**. The scrubbed boiler flue gas (clean gas) is then transferred to two parallel catalytic denitration plants (SCR denitration plants) **98**, **98'**, before it is emitted via stacks **100**, **100'**. The fly ash **99**, **99'** removed in the ESP is 100% recycled to the furnace of the respective slag-tap fired boiler. The contents of Hg_{met} and Hg_{tot} in the dedusted dirty boiler gas are measured continuously at the measurement point **101** downstream of the ESP **96**.

[0048] No sulphur was added. The sulphur dioxide content in the boiler flue gas of $1.3 \cdot 10^3$ S.T.P. db resulted solely from the sulphur of the burnt coal itself. The total mercury content in the dedusted dirty gas downstream of the ESP, that is to say upstream of the wet scrubber, at the start with pure coal combustion (bituminous coal) was on average only 22.5 μg/m^3 S.T.P. db, see **FIG. 7**, curve **71** (total mercury content Hg_{tot}) at 8:30, and the content of metallic mercury was on average only 8.8 μg/m^3 S.T.P. db, see **FIG. 7**, curve **72** (metallic mercury content Hg_{met}) at 8:30. The indentation of both curves **71**, **72** in a **10** minute cycle is based on the regular rapping of the ESP; as a result of this, immediately after cleaning off the dust layers, higher contents occur in the dedusted dirty boiler gas downstream of the ESP. At 9:15 the addition of mercury to the combustion chamber was started (as aqueous $HgCl_2$ solution) and at 10:30, then the addition of bromine to the combustion chamber was also started (as aqueous NaBr solution). The curve **73** (**FIG. 7**, right y axis) depicts the increase in Hg_{tot} content in the boiler flue gas due to addition of mercury. Between approximately 9:30 and 13:00, the increase in total mercury content in the flue gas upstream of the ESP, induced by $HgCl_2$ addition, was at least approximately 220 μg/m^3 S.T.P. db (curve **73**, right y axis). Curve **81** in **FIG. 8** depicts the increase in Br content in the boiler flue gas induced by adding aqueous NaBr solution. At 10:30 the bromine content in the flue gas upstream of the ESP was initially increased by at least 75 mg/M^3 S.T.P. db and decreased again stepwise. At 16:10, there was a renewed increase in bromine content by approximately 43 mg/M^3 S.T.P. db. Because of the recirculation of the fly ash to the slag-tap fired furnace and thus also the recirculation of the mercury and bromine sorbed to the fly ash, these are minimum increases, as result from the rates added and the flue gas volume flow rate (approximately $110 \cdot 10^3$ m^3 S.T.P. db/h). The actual Hg and Br contents in the dirty gas upstream of the ESP are accordingly somewhat higher (circuit between slag-tap fired furnace and ESP).

[0049] Curves **71** and **72** (left y axis) in **FIG. 7** show how the mercury content in the flue gas markedly decreases with addition of the bromine compound. This applies firstly to the ionic mercury (difference between Hg_{tot} and Hg_{met}), which is increased in formation in the presence of the bromine compound and is apparently adsorbed to the recirculated fly ash, but secondly applies still more to metallic mercury, the content of which in the dedusted dirty gas downstream of the ESP, despite the addition of mercury, decreases approximately to the initial content before mercury addition. From 10:30 to 13:00 (end of the Br addition) and far beyond the Hg_{met} content was less than 10 μg/m^3 S.T.P. db. Not until the end of the renewed addition of sodium bromide solution at 19:00 did the Hg_{tot} content markedly increase. Furthermore, the curve **82** in **FIG. 8** shows the initially abrupt decrease in proportion of metallic mercury species with addition of bromine (decrease from approximately 40% by weight to approximately 10% by weight at 10:30). Similar results after approximately 17:00 with the renewed addition of mercury and bromine are found in the gradual decrease of the proportion of Hg_{met} species to approximately 5% by weight at 20:45. As a result of the Hg addition and the increased Hg adsorption, the Hg content in the ESP fly ash recycled to the slag-tap fired furnace increased from initially approximately 2-5 mg/kg in the course of the experiment to 55 mg/kg.

1. Process for removing mercury from flue gases of high-temperature plants, in particular from power stations and waste incineration plants, characterized in that

bromine and/or a bromine compound and/or a mixture of various bromine compounds is fed to the if appropriate multistage furnace and/or to the flue gas in a plant

section downstream of the furnace, the temperature during the contact of the bromine compound with the flue gas being at least 500° C., preferably at least 800° C.,

the combustion taking place in the presence of a sulphur compound, in particular sulphur dioxide, with or without the addition of sulphur and/or a sulphur compound and/or of a mixture of various sulphur compounds,

and then the flue gas being subjected to an if appropriate multistage cleanup for removing mercury from the flue gas, which cleanup comprises a wet scrubber and/or a dry cleanup.

2. Process according to claim 1, characterized in that the bromine compound is an aqueous solution of hydrogen bromide and/or an alkali metal bromide, in particular sodium bromide, and/or an aqueous solution of alkali metal bromide.

3. Process according to one of claims 1 to 2, characterized in that the bromine compound and/or the mixture of bromine compounds are liquid and/or solid high-bromine wastes.

4. Process according to one of claims 1 to 3, characterized in that the bromine and/or the bromine compound and/or the mixture of bromine compounds is added to the combustion air and/or if appropriate a recycled substream, in particular the recycled flue gas and the recycled fly ash.

5. Process according to one of claims 1 to 4, characterized in that the mass ratio of bromine to mercury is in the range from 102 to 104.

6. Process according to one of claims 1 to 5, characterized in that the combustion is carried out additionally in the presence of chlorine and/or a chlorine compound and/or a mixture of various chlorine compounds and/or iodine and/or an iodine compound and/or a mixture of various iodine compounds.

7. Process according to one of claims 1 to 6, characterized in that the flue gas emission control system comprises a multistage wet flue gas scrubber having at least one strongly acidic scrubbing stage and/or at least one weakly acidic and/or akaline scrubbing stage.

8. Process according to one of claims 1 to 7, characterized in that the flue gas emission control system comprises at least one dry or semi-dry absorption-based emission control stage, in particular using electrostatic or filtering dust separators.

9. Process according to claim 8, characterized in that the fly ash loaded with mercury from any dust separators present is given a thermal secondary treatment to decrease mercury load, in particular in a rotary drum heated to temperatures of at least 200° C.

10. Process according to one of claims 1 to 9, characterized in that the mercury content of the flue gas, in particular the content of metallic mercury, is measured continuously downstream of the flue gas emission control system and on the basis of the measured mercury content the amount of bromine fed and/or bromine compounds fed and any sulphur and/or sulphur compounds fed is controlled.

* * * * *