US 20070108476A1

(19) United States

(12) Patent Application Publication

(10) Pub. No.: US 2007/0108476 A1

(43) Pub. Date: May 17, 2007

Hong

(54) IMAGER WITH REFLECTOR MIRRORS

(76) Inventor: **Sungkwon C. Hong**, Boise, ID (US)

Correspondence Address:
DICKSTEIN SHAPIRO LLP
1825 EYE STREET NW
Washington, DC 20006-5403 (US)

(21) Appl. No.: **11/647,308**

(22) Filed: **Dec. 29, 2006**

Related U.S. Application Data

(62) Division of application No. 10/856,932, filed on Jun. 1, 2004.

Publication Classification

(51) **Int. Cl.**
H01L 27/148 (2006.01)

(52) **U.S. Cl.** **257/225**

(57) **ABSTRACT**

Embodiments of the invention provide an imager pixel comprising a reflective layer formed over a substrate. There is a semiconductor layer over the reflective layer. A photo-conversion device is formed at a surface of the semiconductor layer. The reflective layer serves to reflect incident light not initially absorbed into the photo-conversion device, back to the photo-conversion device.

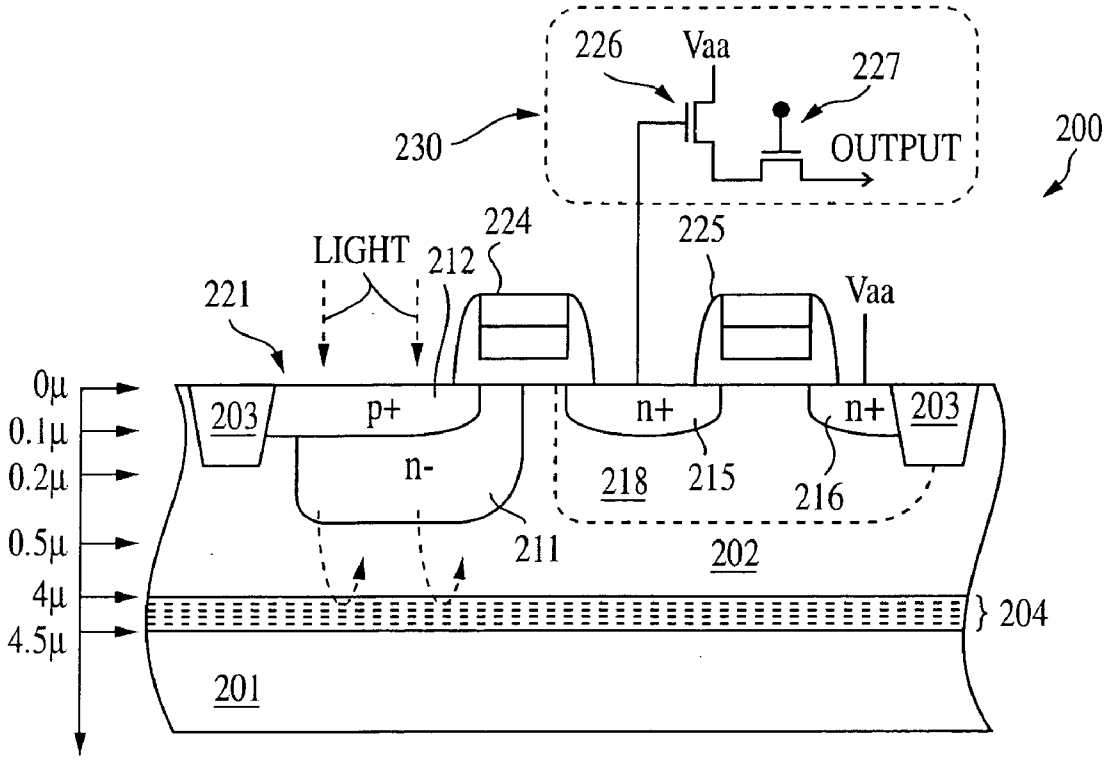

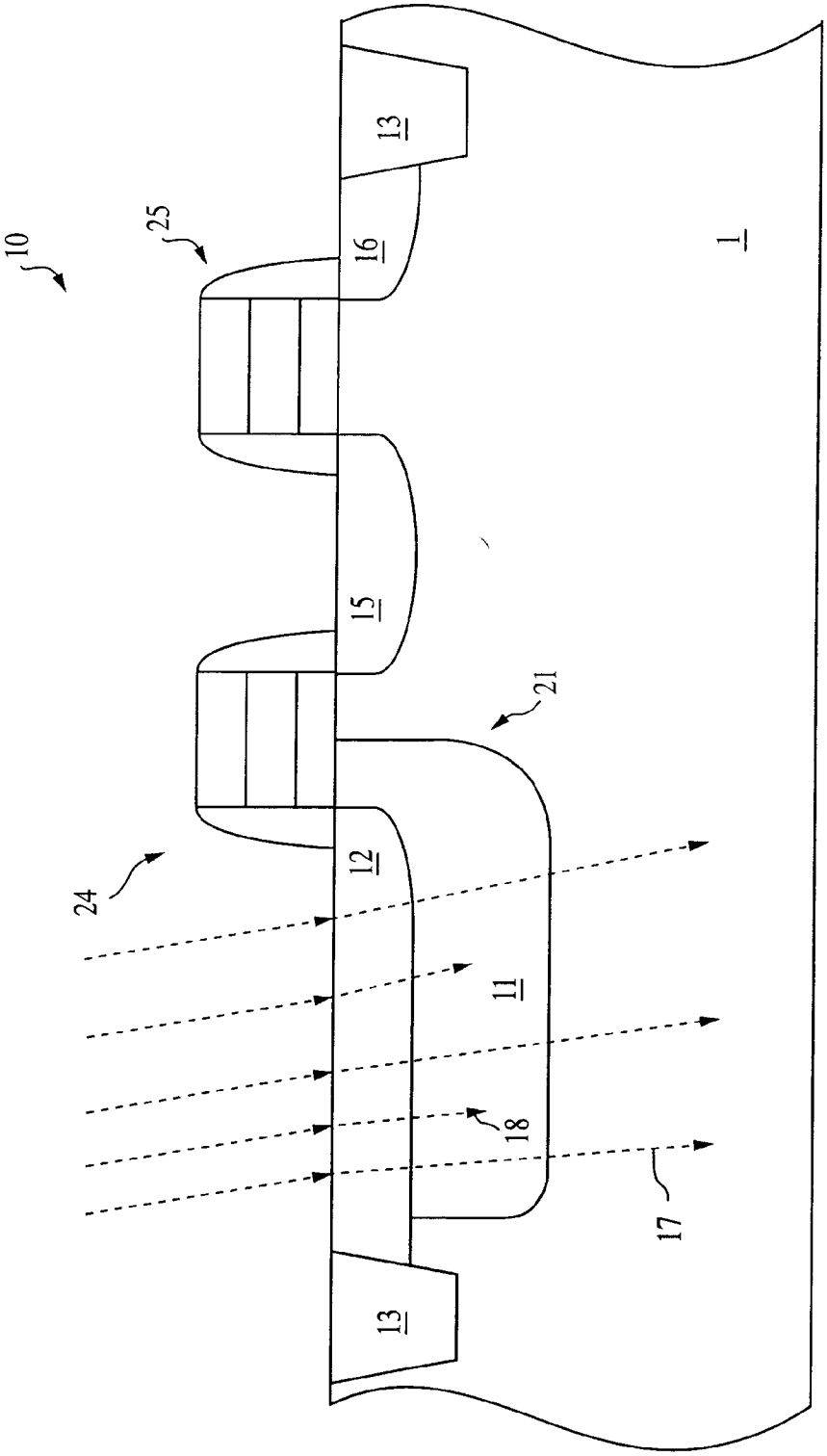

FIG. 1
PRIOR ART

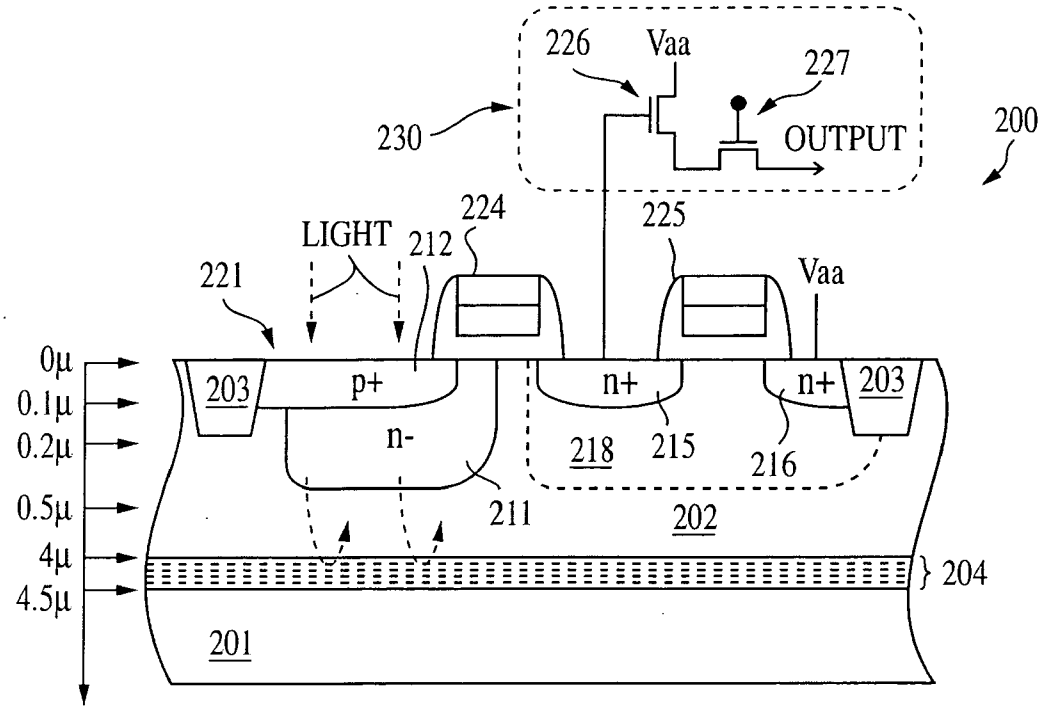
226
Vaa
227
230
OUTPUT
200
224
225
LIGHT
212
221
Vaa
0μ
0.1μ
0.2μ
0.5μ
4μ
4.5μ
203
p+
n+
n+
203
n-
218
215
216
211
202
204
201

FIG. 2

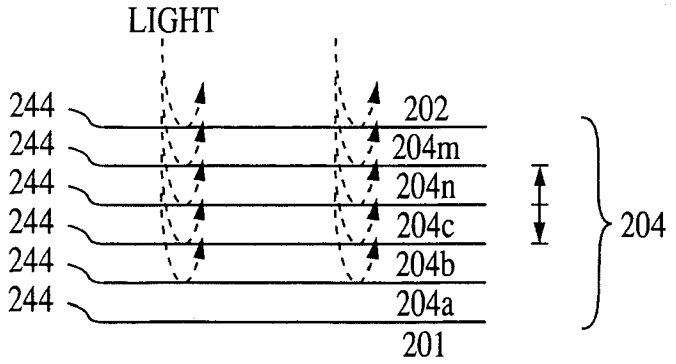
LIGHT
244
244
244
244
244
244
202
204m
204n
204c
204b
204a
201
204

FIG. 3

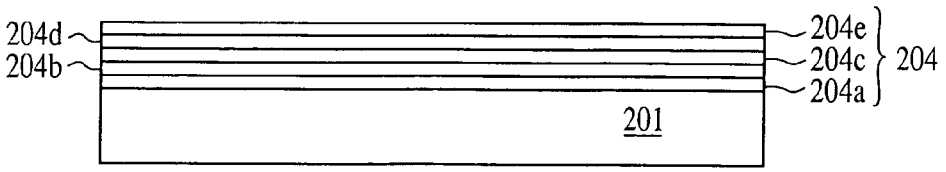
204d
204b
204e
204c
204a
204
201

FIG. 4

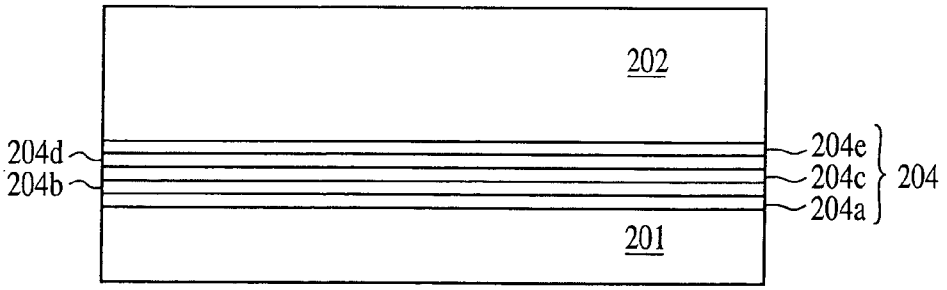
202
204d
204b
204e
204c
204a
204
201

FIG. 5

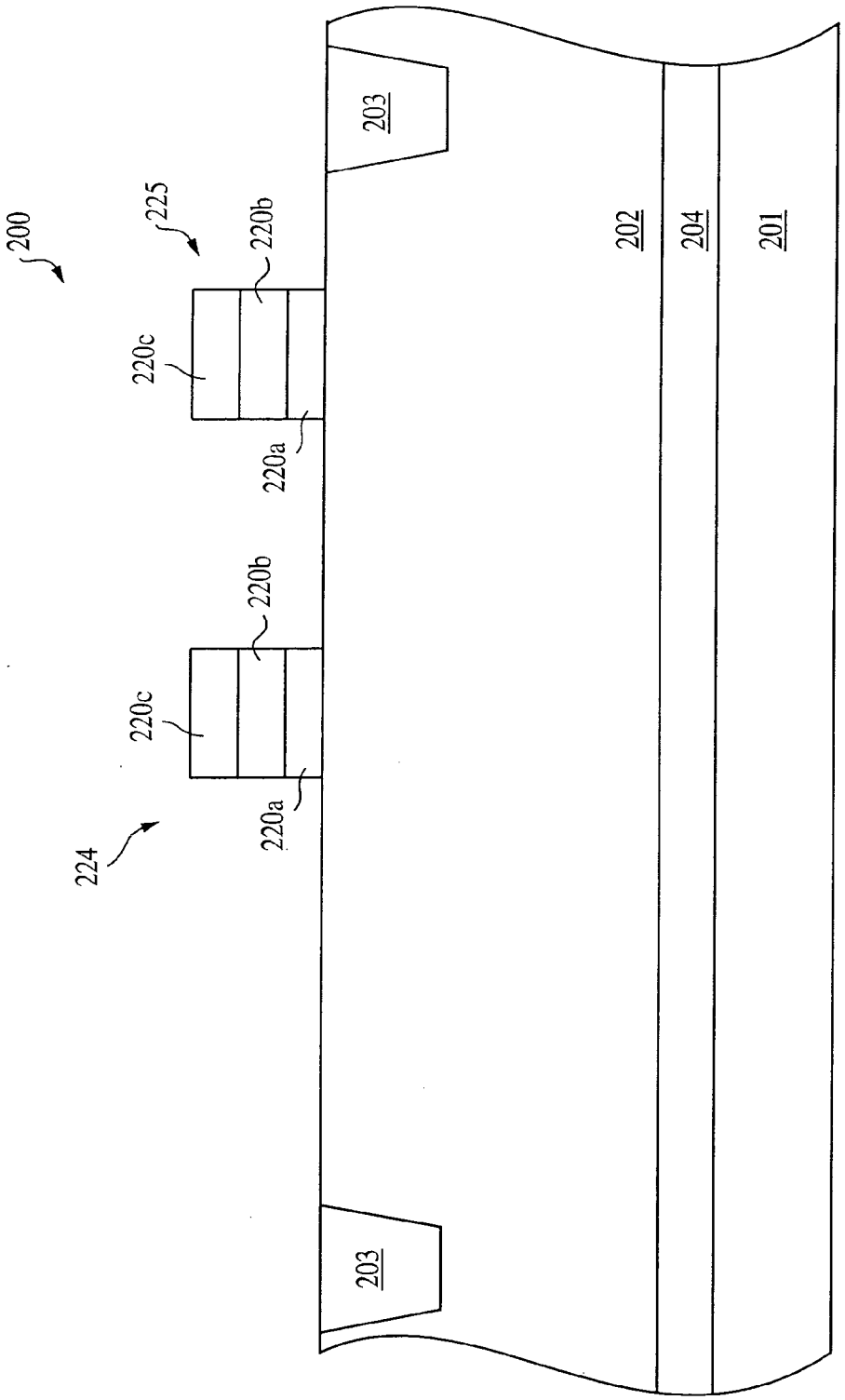

FIG. 6

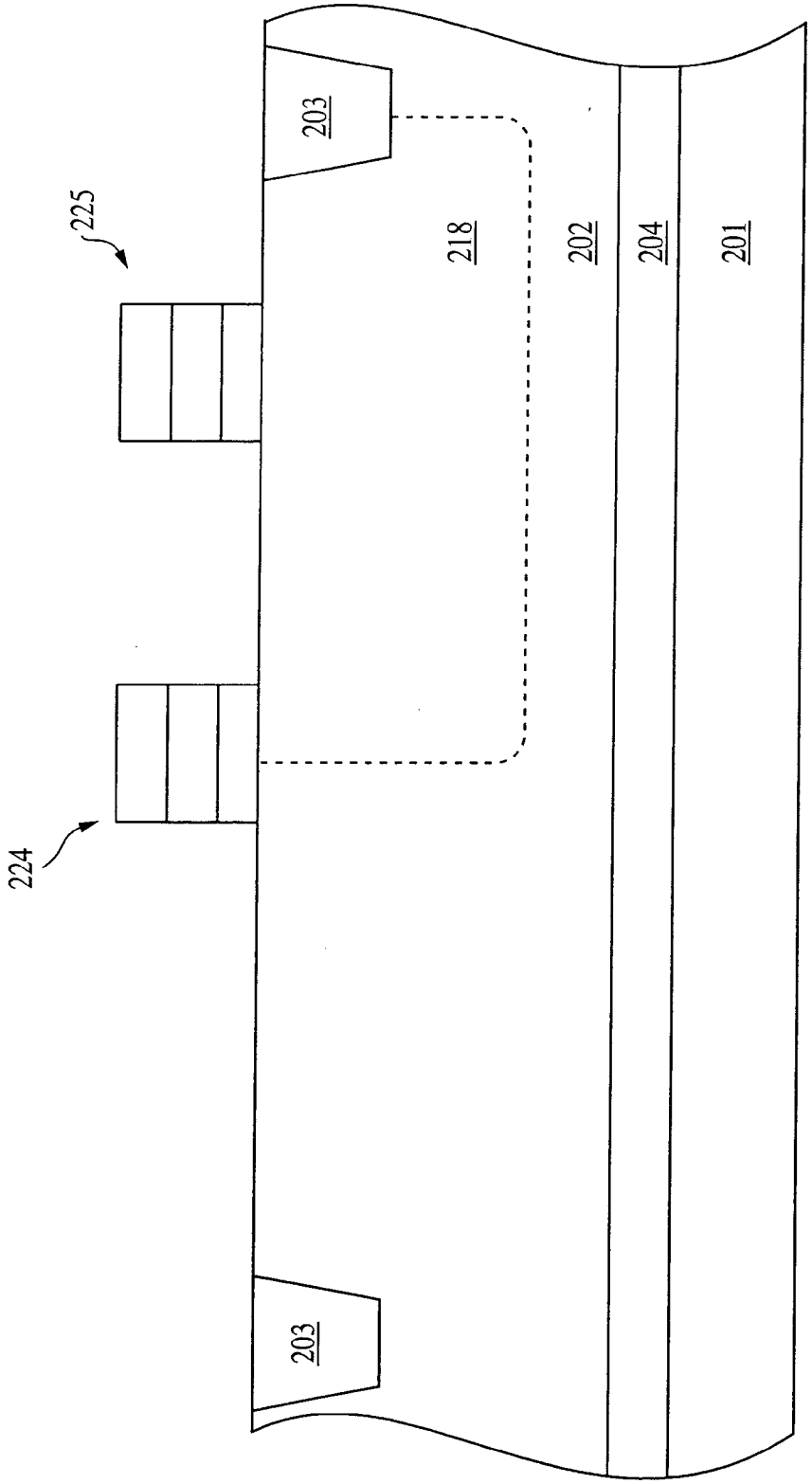

FIG. 7

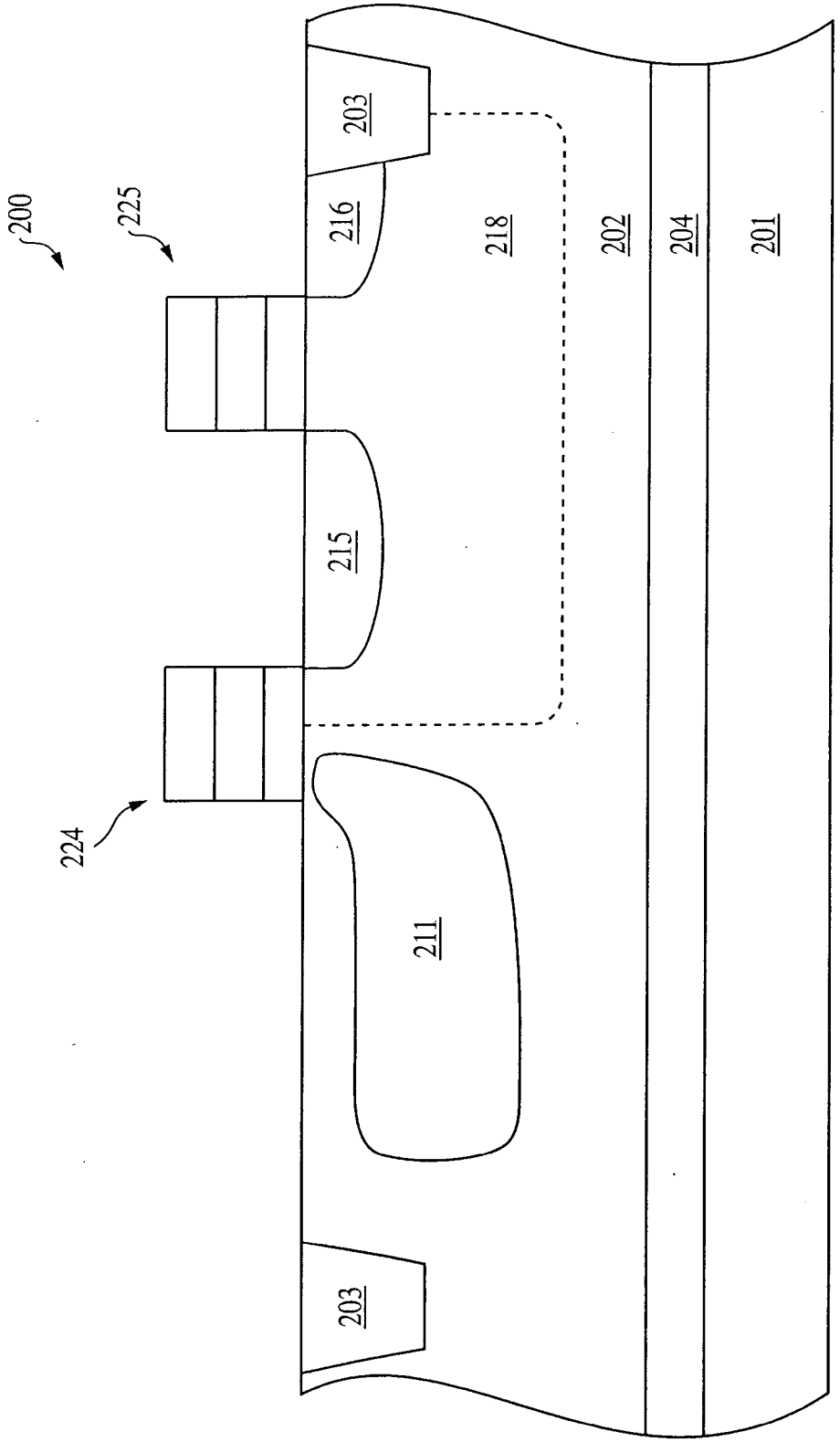

FIG. 8

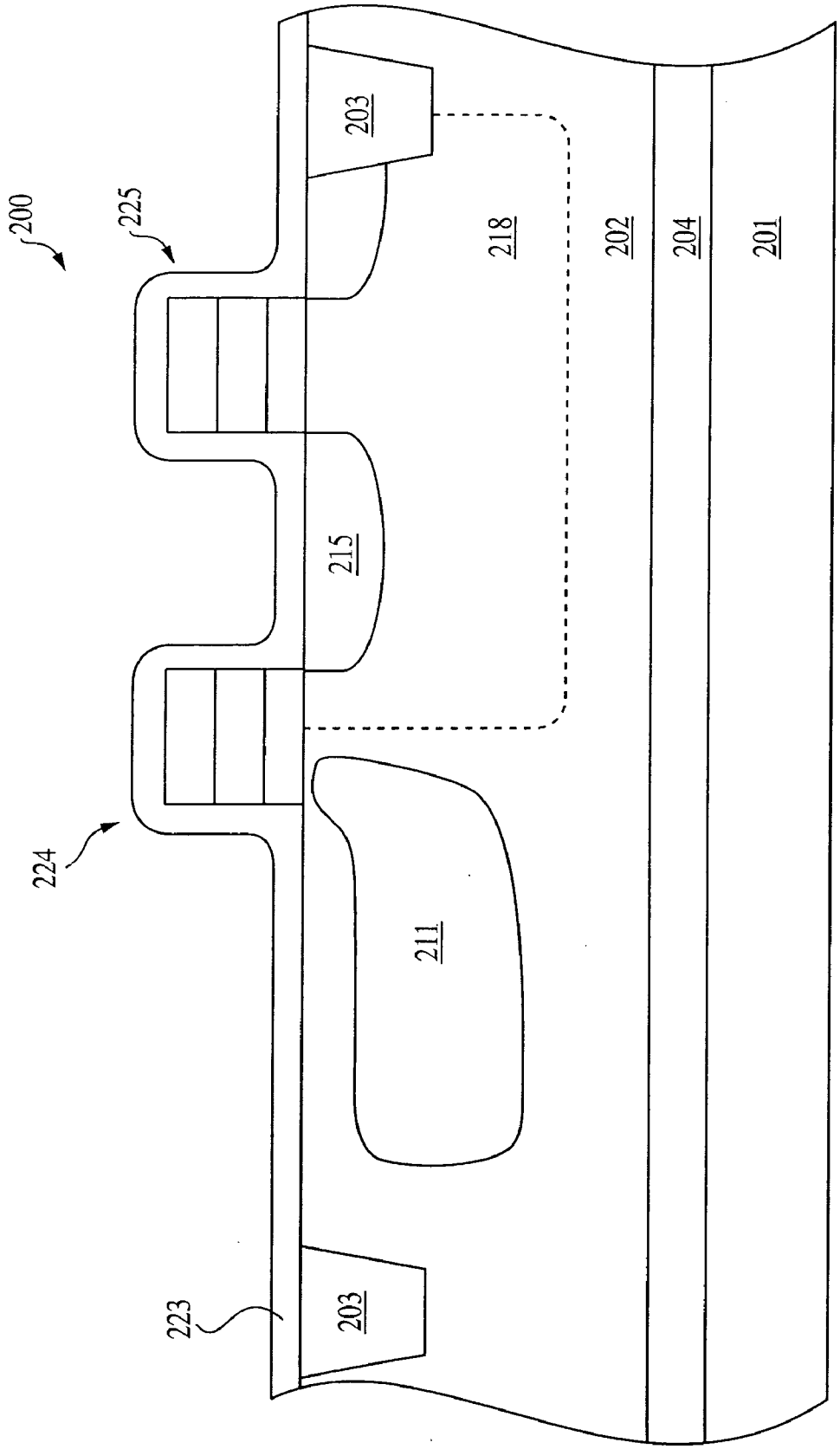

FIG. 9

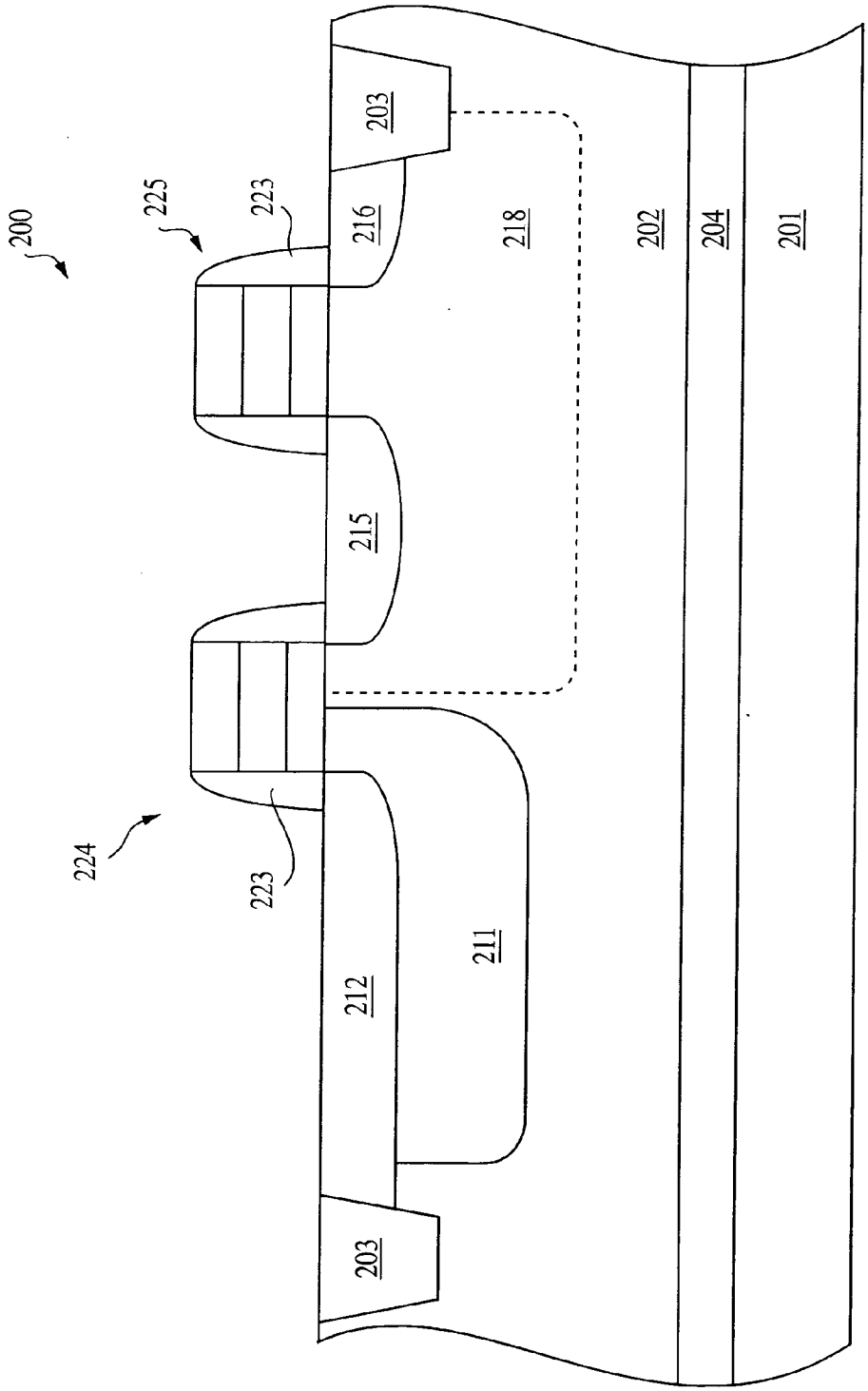

FIG. 10

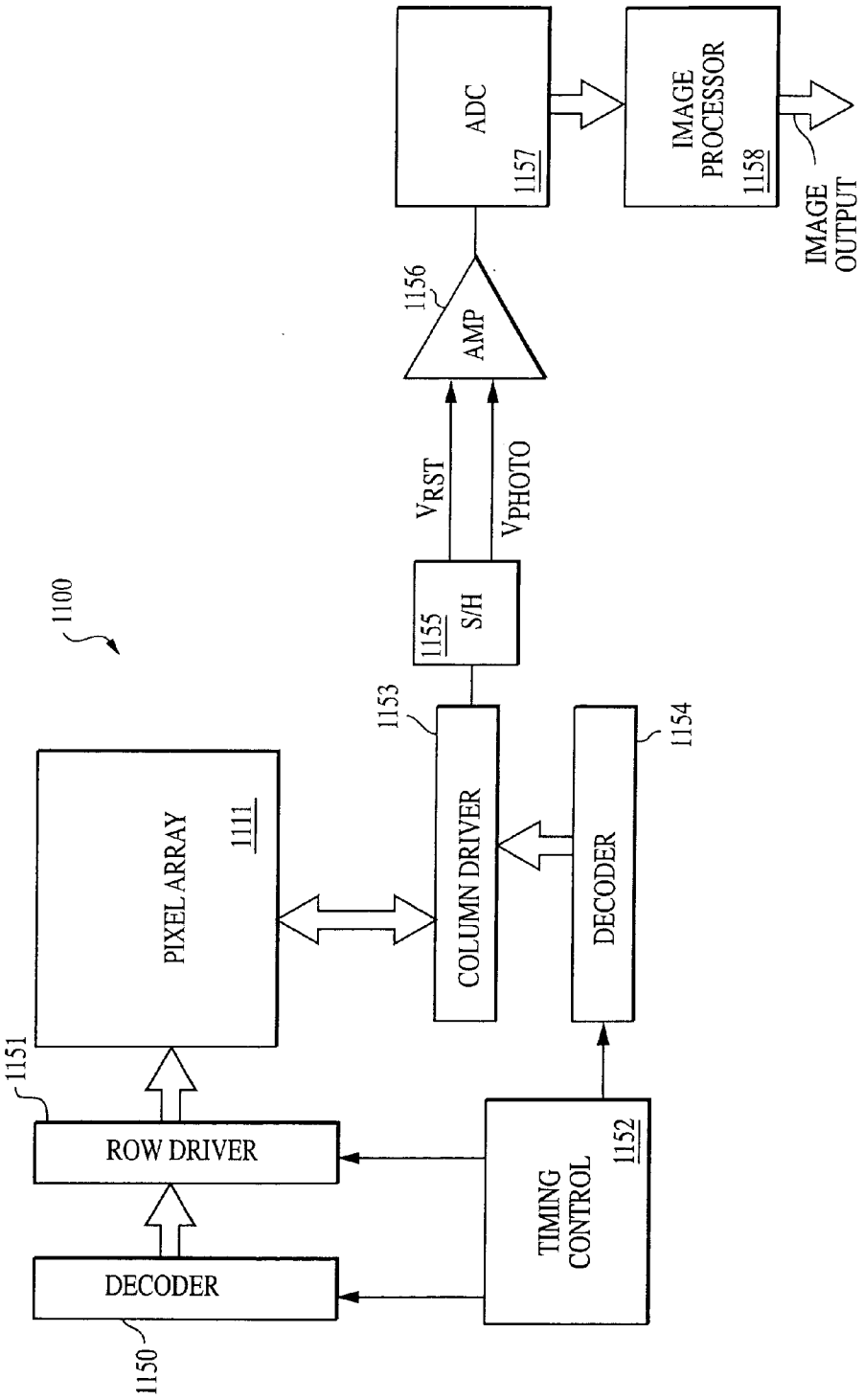
1100
PIXEL ARRAY
1111
1151
ROW DRIVER
DECODER
1150
COLUMN DRIVER
1153
DECODER
1154
TIMING CONTROL
1152
1155
S/H
V_{RST}
V_{PHOTO}
1156
AMP
ADC
1157
IMAGE PROCESSOR
1158
IMAGE OUTPUT

FIG. 11

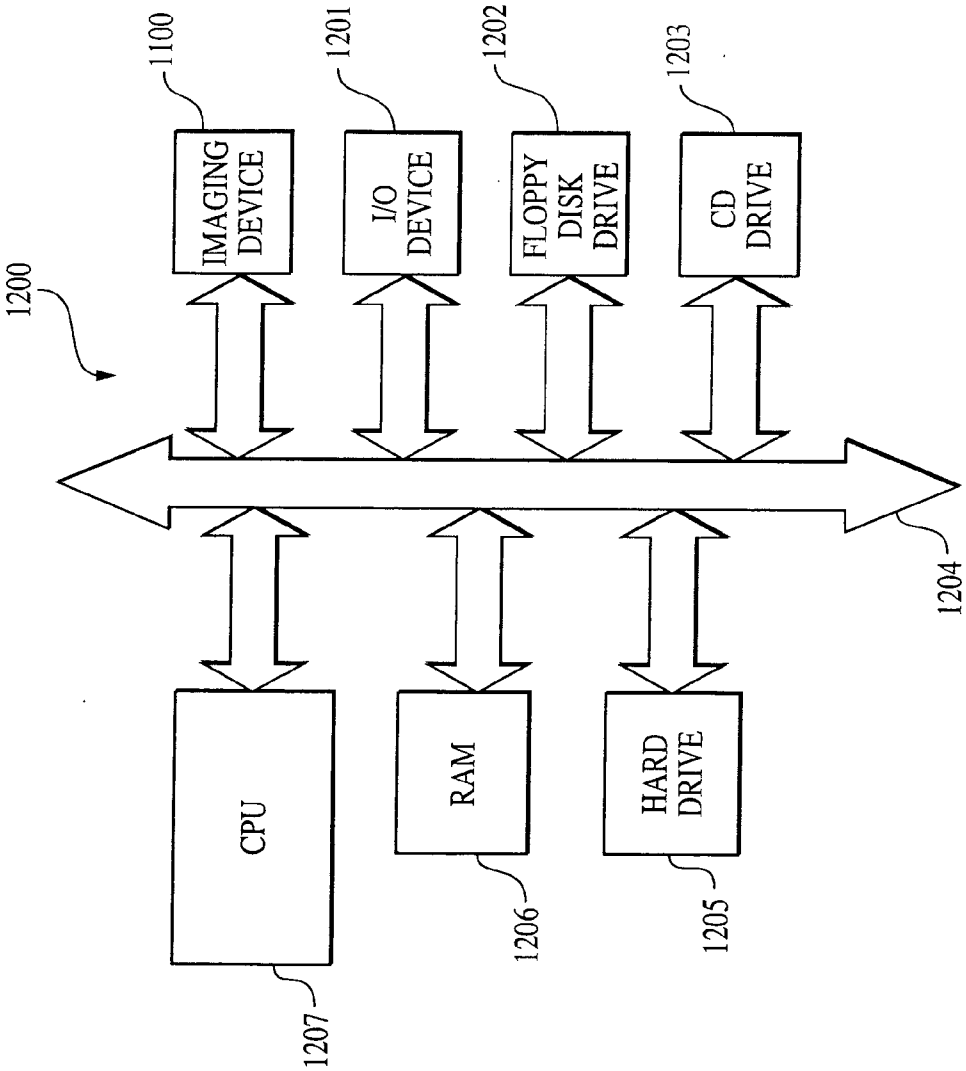
1200
1100
IMAGING DEVICE
1201
I/O DEVICE
1202
FLOPPY DISK DRIVE
1203
CD DRIVE
1204
CPU
1207
RAM
1206
HARD DRIVE
1205

FIG. 12

IMAGER WITH REFLECTOR MIRRORS

FIELD OF THE INVENTION

[0001] The present invention relates to the field of semiconductor devices, particularly to an imager pixel with improved quantum efficiency and reduced cross talk.

BACKGROUND OF THE INVENTION

[0002] Typically, an image sensor array includes a focal plane array of pixels, each one of the pixels including a photo-conversion device such as, e.g., a photogate, photoconductor, or a photodiode. FIG. **1** illustrates a typical CMOS imager pixel **10** having a pinned photodiode **21** as its photo-conversion device. The photodiode **21** is adjacent to an isolation region **13**, which is depicted as a shallow trench isolation (STI) region. The photodiode **21** includes an n-type region **11** underlying a p+ surface layer **12**.

[0003] The photodiode **21** converts photons to charge carriers, e.g., electrons, which are transferred to a floating diffusion region **15** by a transfer transistor **24**. In addition, the illustrated pixel **10** typically includes a reset transistor **25**, connected to a source/drain region **16**, for resetting the floating diffusion region **15** to a predetermined charge level prior to charge transference. In operation, a source follower transistor (not shown) outputs a voltage representing the charge on the floating diffusion region **15** to a column line (not shown) when a row select transistor (not shown) for the row containing the pixel is activated.

[0004] Exemplary CMOS image sensor circuits, processing steps thereof, and detailed descriptions of the functions of various CMOS elements of an image sensor circuit are described, for example, in U.S. Pat. No. 6,140,630, U.S. Pat. No. 6,376,868, U.S. Pat. No. 6,310,366, U.S. Pat. No. 6,326,652, U.S. Pat. No. 6,204,524, and U.S. Pat. No. 6,333,205, assigned to Micron Technology, Inc. The disclosures of each of the forgoing patents are herein incorporated by reference in their entirety.

[0005] In the conventional pixel **10**, when incident light strikes the surface of the photodiode **21**, charge carriers (electrons), are generated in the depletion region of the p-n junction (between region **11** and region **12**) of the photodiode **21**. The carriers are collected in the region **11**. Light having shorter wavelengths, e.g., 650 nanometers (nm) or shorter, (represented by arrows **18**) is absorbed closer to the surface of the substrate **1**, whereas light having longer wavelengths, e.g., 650-750 nm or longer, (represented by arrows **17**) is absorbed deeper into the substrate **1**. In the conventional pixel **10** of FIG. **1**, a large amount of incident light of longer wavelengths will not be absorbed in the photodiode **21** leading to decreased quantum efficiency. In order to capture light absorbed deep in the substrate **1**, the depletion region of the photodiode **21** would have to be very deep, e.g., tens of microns deep. Such a design, however, can lead to increased cross talk, where charge carriers from one pixel travel to adjacent pixels. This approach also requires complicated fabrication processes. What is needed, therefore, is a pixel that can capture longer wavelengths of light, e.g., 650-750 nm or longer, with improved quantum efficiency and without increased cross talk.

BRIEF SUMMARY OF THE INVENTION

[0006] Embodiments of the invention provide an imager pixel comprising a reflective layer formed over a substrate. There is a semiconductor layer over the reflective layer. A photo-conversion device is formed at a surface of the semiconductor layer. The reflective layer serves to reflect incident light, not initially absorbed into the photo-conversion device, back to the photo-conversion device. Thereby, the quantum efficiency of the pixel can be improved. Also, cross talk can be reduced as reflected light will not travel to adjacent pixels.

BRIEF DESCRIPTION OF THE DRAWINGS

[0007] The foregoing and other advantages and features of the invention will become more apparent from the detailed description of exemplary embodiments provided below with reference to the accompanying drawings in which:

[0008] FIG. **1** is a cross-sectional view of a conventional pixel;

[0009] FIG. **2** is a cross-sectional view of a pixel according to an embodiment of the invention;

[0010] FIG. **3** is a cross-sectional view of a portion of the FIG. **2** pixel;

[0011] FIG. **4** is a cross-sectional view of the FIG. **2** pixel at an initial stage of fabrication;

[0012] FIGS. **5-10** are cross-sectional views of the FIG. **2** pixel at intermediate stages of fabrication;

[0013] FIG. **11** is a block diagram of an image sensor according to an embodiment of the invention; and

[0014] FIG. **12** is a block diagram of a processing system according to an embodiment of the invention.

DETAILED DESCRIPTION OF THE INVENTION

[0015] In the following detailed description, reference is made to the accompanying drawings, which form a part hereof and illustrate specific embodiments in which the invention may be practiced. In the drawings, like reference numerals describe substantially similar components throughout the several views. These embodiments are described in sufficient detail to enable those skilled in the art to practice the invention, and it is to be understood that other embodiments may be utilized, and that structural, logical and electrical changes may be made without departing from the spirit and scope of the present invention.

[0016] The terms "wafer" and "substrate" are to be understood as including silicon, silicon-on-insulator (SOI), or silicon-on-sapphire (SOS) technology, doped and undoped semiconductors, epitaxial layers of silicon supported by a base semiconductor foundation, and other semiconductor structures. Furthermore, when reference is made to a "wafer" or "substrate" in the following description, previous process steps may have been utilized to form regions or junctions in the base semiconductor structure or foundation. In addition, the semiconductor need not be silicon-based, but could be based on silicon-germanium, germanium, or gallium-arsenide.

[0017] The term "pixel" refers to a picture element unit cell containing a photo-conversion device for converting electromagnetic radiation to an electrical signal. For purposes of illustration, a representative pixel is illustrated in

the figures and description herein, and typically fabrication of all pixels in an image sensor will proceed concurrently in a similar fashion.

[0018] Referring to the drawings, FIG. **2** depicts a pixel **200** according to an exemplary embodiment of the invention. Pixel **200** includes a photo-conversion device, which is, illustratively, a pinned photodiode **221**. The photodiode **221** is adjacent to an isolation region **203**, which is illustratively a shallow trench isolation (STI) region. The photodiode **221** includes an n-type region **211** underlying a p+ surface layer **212**. Adjacent to the photodiode **221**, is a floating diffusion region **215**. Between the photodiode **221** and the floating diffusion region **215** is a transfer transistor **224**, which operates to transfer charge from the photodiode **221** to the floating diffusion region **215**.

[0019] It should be noted that the configuration of pixel **200** is only exemplary and that various changes may be made as are known in the art and pixel **200** may have other configurations. Although the invention is described in connection with a four-transistor (4T) pixel, the invention may also be incorporated into other pixel circuits having different numbers of transistors. Without being limiting, such a circuit may include a three-transistor (3T) pixel, a five-transistor (5T) pixel, and a six-transistor (6T) pixel. A 3T cell omits the transfer transistor, but may have a reset transistor adjacent to a photodiode. A 5T pixel differs from the 4T pixel by the addition of a transistor, such as a shutter transistor or a CMOS photogate transistor, and a 6T pixel further includes an additional transistor, such as an anti-blooming transistor.

[0020] A readout circuit **230** is connected to the floating diffusion region **215**. The readout circuit **230** includes a source follower transistor **226**, the gate of which is connected to the floating diffusion region **215**. The readout circuit also includes a row select transistor **227** for selecting the pixel **200** for readout in response to a signal received at the gate of the row select transistor **227**.

[0021] A reset transistor **225** is provided adjacent to the floating diffusion region **215**. In response to a signal received at the reset transistor **225** gate, the reset transistor **225** resets the floating diffusion region **215** to a predetermined voltage, which is, for example, an array voltage Vaa. The source/drain region **216** of the reset transistor **225** is connected to Vaa and is adjacent to an STI region **203**.

[0022] As shown in FIG. **2**, the transfer and reset transistors **224**, **225**, and photodiode **221** are located at a surface of a semiconductor layer **202**. Illustratively, the semiconductor layer **202** is a layer of p-type silicon (Si). A doped well **218** can be formed within the Si layer **202**. In the exemplary embodiment of FIG. **2**, well **218** is a p-well. The p-well **218** extends from the surface of Si layer **202** to a depth within Si layer **202**, e.g., a depth greater than the n-type region **211**. The p-well **218** reaches from below an STI region **203** adjacent to the source/drain region **216** of the reset transistor **225** to a point below the transfer transistor **224**. Accordingly, the source/drain region **216** and floating diffusion region **215** are located in the p-well **218**.

[0023] The Si layer **202** overlies a reflective layer **204**, which in turn overlies a substrate **201**. As shown in FIG. **3**, the reflective layer **204** is illustratively a Distributed Bragg Reflector (DBR) mirror including sub-layers **204***a*, **204***b*, **204***c*, **204***n*, and **204***m*. Reflective layer **204**, however, can include more or fewer sub-layers. Sub-layers **204***b* and **204***n* each have a first index of refraction. Illustratively, Si layer **202** and substrate **201** also have the first index of refraction. Sub-layers **204***a*, **204***c*, and **204***m* each have a second index of refraction. Therefore, each sub-layer **204***a-m* is in contact with material having a different refractive index to form a (first refractive index layer)/(second refractive index layer) structure. For example, sub-layer **204***c* has a first refractive index and is in contact with overlying sub-layer **204***n* and underlying sub-layer **204***b*, each having a second refractive index. Similarly, sub-layer **204***n* contacts overlying sub-layer **204***m* and underlying sub-layer **204***c*, which each have a first index of refraction.

[0024] In the exemplary embodiment of FIGS. **2-3**, the sub-layers **204***a-m* are dielectric and/or semiconductor materials. According to one exemplary embodiment, sub-layers **204***b* and **204***n* are silicon (Si) and sub-layers **204***a*, **204***c*, and **204***m* are silicon-germanium (Si_xGe_{1-x}), such that reflective layer **204** has an Si_xGe_{1-x}/Si structure. In another exemplary embodiment, sub-layers **204***b* and **204***n* are Si and sub-layers **204***a*, **204***c*, and **204***m* are SiO_2, such that reflective layer **204** has an SiO_2/Si structure.

[0025] Each set of sub-layers which makes up the structural pattern of reflective layer **204** has a thickness T. For example, as shown in FIG. **3**, a pair of adjacent sub-layers (one sub-layer having the first refractive index and another sub-layer having the second refractive index) has a thickness T. Illustratively, the sub-layers **204***a-m* are stacked such that the (first refractive index sub-layer)/(second refractive index sub-layer) structure is periodic, or otherwise stated the reflective layer **204** has a (first refractive index sub-layer)/(second refractive index sub-layer) periodic structure. In the exemplary embodiment of FIGS. **2** and **3**, T, the thickness or period of the structure, is approximately equal to one quarter of the wavelength targeted for reflection. Otherwise stated, to optimize the reflection for a desired wavelength λ, T is approximately equal to λ/4. For example, where the wavelength of light targeted for reflection by reflective layer **204** is approximately 650 to 750 nanometers (nm) (a red light signal), the period T of the (first refractive index layer)/(second refractive index layer) structure is approximately 175 nm.

[0026] Light of a targeted wavelength (represented by dashed arrows) incident on photodiode **221**, which is not initially absorbed into photodiode **221**, is reflected by the reflective layer **204**, as shown in FIGS. **2** and **3**. Light is reflected at the discontinuity at the junctions **244** between the sub-layers **204***a-m*, where materials having differing refractive indexes meet. The total reflectivity of reflective layer **204** is a summation of the reflections from each of the junctions **244**. Thereby, the quantum efficiency of the pixel **200** is increased as compared to a conventional pixel **10**. Additionally, cross talk can be reduced, as the reflected light will not travel to adjacent pixels. Further, the thickness of the Si layer **202** can be effectively reduced because a thick Si layer **202** is not needed to accommodate a deep depletion region.

[0027] The number of sub-layers in layer **204** and the materials used to form the sub-layers can be optimized to produce a highly reflective DBR mirror at a targeted wavelength. At the targeted wavelength, the optimal number of sub-layers will depend on the difference in the refractive indexes of the chosen materials.

[0028] Exemplary embodiments for the fabrication of the pixel **200** are described below with reference to FIGS. **4** through **10**. No particular order is required for any of the actions described herein, except for those logically requiring the results of prior actions. Accordingly, while the actions below are described as being performed in a general order, the order is exemplary only and may be altered.

[0029] FIG. **4** illustrates a pixel cell **200** at an initial stage of fabrication. In one exemplary embodiment, alternating sub-layers of Si_xGe_{1-x} and Si are formed on the substrate **201** to form reflective layer **204**. Illustratively, for the Si_xGe_{1-x} sub-layers, x can be within the range of approximately 0.8 to approximately 0.95. The reflective layer **204** can be formed having a thickness of approximately 0.5 micrometers (μm). As shown in FIG. **4**, sub-layers **204***a*, **204***c*, and **204***m* are Si_xGe_{1-x} sub-layers and sub-layers **204***b* and **204***n* are Si sub-layers. As noted above, layer **204** can be formed having an Si_xGe_{1-x}/Si structure with a period of approximately λ/4. Each of the sub-layers **204***a-m* can be formed by methods known in the art, such as, for example, epitaxy, chemical vapor deposition (CVD), and atomic layer deposition (ALD).

[0030] As shown in FIG. **5**, Si layer **202** is grown or deposited on reflective layer **204**. Si layer **202** is of a first conductivity type, which in the illustrated embodiment is p-type, and can be formed having a thickness of approximately 4 μm.

[0031] Alternatively, in another exemplary embodiment, layer **204** can be formed having an SiO_2/Si structure. In such a case sub-layers **204***a*, **204***c*, and **204***m* are SiO_2 sub-layers and sub-layers **204***b* and **204***n* are Si sub-layers. The SiO_2/Si structure can be formed using known SOI techniques, such as, for example, wafer bonding techniques, where two oxidized Si wafers are bonded and the excess Si from one of the wafers is removed; or implantation techniques, where oxygen is implanted into a Si wafer, to achieve the structure shown in FIG. **5**. Where wafer bonding techniques are used, substrate **201** and Si layer **202** would be Si wafers. Where implantation techniques are used substrate **201** and Si layer **202** would be a same Si wafer. As noted above, layer **204** can be formed having an SiO_2/Si structure with a period of approximately λ/4.

[0032] FIG. **6** depicts the formation of isolation regions **203** and the transistor **224**,**225** gate stacks. Although not shown, the source follower and row select transistors **226**, **227** can be formed concurrently with the transfer and reset transistors **224**, **225** as described below.

[0033] The isolation regions **203** are formed in the Si layer **202** and filed with a dielectric material. The dielectric material may be an oxide material, for example a silicon oxide, such as SiO or SiO_2; oxynitride; a nitride material, such as silicon nitride; silicon carbide; a high temperature polymer; or other suitable dielectric material. As shown in FIG. **6**, the isolation regions **203** can be STI regions and can have a depth of approximately 0.2 μm. The dielectric material is illustratively a high density plasma (HDP) oxide, a material which has a high ability to effectively fill narrow trenches.

[0034] To form the transfer and reset transistor **224**, **225** gate stacks, as shown in FIG. **6**, a first insulating layer **220***a* of, for example, silicon oxide is grown or deposited on the Si layer **202**. The first insulating layer **220***a* serves as the gate oxide layer for the subsequently formed transistor gates **224** and **225**. Next, a layer of conductive material **220***b* is deposited over the oxide layer **220***a*. The conductive layer **220***b* serves as the gate electrode for the subsequently formed transistors **224**, **225**. The conductive layer **220***b* may be a layer of polysilicon, which may be doped to a second conductivity type, e.g., n-type. A second insulating layer **220***c* is deposited over the polysilicon layer **220***b*. The second insulating layer **220***c* may be formed of, for example, an oxide (SiO_2), a nitride (silicon nitride), an oxynitride (silicon oxynitride), ON (oxide-nitride), NO (nitride-oxide), or ONO (oxide-nitride-oxide).

[0035] The layers **220***a*, **220***b*, and **220***c*, may be formed by conventional deposition methods, such as chemical vapor deposition (CVD) or plasma enhanced chemical vapor deposition (PECVD), among others. The layers **220***a*, **220***b*, and **220***c* are then patterned and etched to form the transfer and reset transistor **224**, **225** multilayer gate stack structures shown in FIG. **6**.

[0036] The invention is not limited to the structure of the gate stacks described above. Additional layers may be added or the gate stacks may be altered as is desired and known in the art. For example, a silicide layer (not shown) may be formed between the gate electrodes **220***b* and the second insulating layers **220***c*. The silicide layer may be included in the transfer and reset transistor **224**, **225** gate stacks, or in all of the transistor gate structures in an image sensor circuit, and may be titanium silicide, tungsten silicide, cobalt silicide, molybdenum silicide, or tantalum silicide. This additional conductive layer may also be a barrier layer/refractor metal, such as TiN/W or W/N_x/W, or it could be formed entirely of WN_x.

[0037] A well **218** of the first conductivity type, illustratively a p-well, is implanted into the Si layer **202** as shown in FIG. **7**. The p-well **218** is formed in the Si layer **202** from a point below the transfer gate **224** to a point below the STI region **203** that is on a side of the reset gate **225** opposite the transfer gate **224**. The p-well **218** may be formed by known methods. For example, a layer of photoresist (not shown) can be patterned over the Si layer **202** having an opening over the area where a p-well **218** is to be formed. A p-type dopant, such as boron, can be implanted into the substrate through the opening in the photoresist. Illustratively, the p-well **218** is formed having a p-type dopant concentration that is higher than adjacent portions of the Si layer **202**.

[0038] As depicted in FIG. **8**, a doped region **211** of the second conductivity type is implanted in the Si layer **202** (for the photodiode **221**). The doped region **211** is, illustratively, a lightly doped n-type region formed to a depth of approximately 0.5 μm. For example, a layer of photoresist (not shown) may be patterned over the Si layer **202** having an opening over the surface of the Si layer **202** where pinned photodiode **221** is to be formed. An n-type dopant, such as phosphorus, arsenic, or antimony, may be implanted through the opening and into the Si layer **202**. Multiple implants may be used to tailor the profile of region **211**. If desired, an angled implantation may be conducted to form the doped region **211**, such that implantation is carried out at angles other than 90 degrees relative to the surface of the Si layer **202**.

[0039] As shown in FIG. **8**, the region **211** is formed on an opposite side of the transfer gate **224** from the reset gate **225**

and is approximately aligned with an edge of the gate of the transfer transistor **224**. Region **211** forms a photosensitive charge accumulating region for collecting photo-generated charge.

[**0040**] The floating diffusion region **215** and the reset transistor **225** source/drain region **216** may be implanted by known methods to achieve the structure shown in FIG. **8**. The floating diffusion region **215** and source/drain region **216** are formed as regions of the second conductivity type, which for exemplary purposes is n-type. Any suitable n-type dopant, such as phosphorus, arsenic, or antimony, may be used. The floating diffusion region **215** is formed between the transfer transistor **224** gate stack and the reset transistor **225** gate stack. The reset source/drain region **216** is formed adjacent to the reset transistor **225** gate stack and opposite to the floating diffusion region **215**.

[**0041**] FIG. **9** depicts the formation of a dielectric layer **223**. Illustratively, layer **223** is an oxide layer, but layer **223** may be any appropriate dielectric material, such as silicon dioxide, silicon nitride, an oxynitride, ON, NO, ONO, or TEOS, among others, formed by methods known in the art.

[**0042**] The doped surface layer **212** for the photodiode **221** is implanted, as illustrated in FIG. **10**. Doped surface layer **212** is doped to the first conductivity type. Illustratively, doped surface layer **212** is a highly doped p+ surface layer and is formed to a depth of approximately 0.1 μm. A p-type dopant, such as boron, indium, or any other suitable p-type dopant, may be used to form the p+ surface layer **212**.

[**0043**] The p+ surface layer **212** may be formed by known techniques. For example, layer **212** may be formed by implanting p-type ions through openings in a layer of photoresist. Alternatively, layer **212** may be formed by a gas source plasma doping process, or by diffusing a p-type dopant into the Si layer **202** from an in-situ doped layer or a doped oxide layer deposited over the area where layer **212** is to be formed.

[**0044**] Also, as shown in FIG. **10**, a dry etch step is conducted to etch portions of the oxide layer **223** such that only sidewall spacers **223** on gates **224** and **225** remain. Alternatively, oxide layer **223** may be etched such that remaining portions form a sidewall spacer **223** on a sidewall of reset gate **225** opposite to floating diffusion region **215** and a protective layer (not shown) over the transfer gate **224**, the photodiode **221**, the floating diffusion region **215** and a portion of the reset gate **225** adjacent to the floating diffusion region **215**.

[**0045**] Conventional processing methods may be used to complete the pixel **200**. For example, insulating, shielding, and metallization layers to connect gate lines, and other connections to the pixel **200** may be formed. Also, the entire surface may be covered with a passivation layer (not shown) of, for example, silicon dioxide, BSG, PSG, or BPSG, which is CMP planarized and etched to provide contact holes, which are then metallized to provide contacts. Conventional layers of conductors and insulators may also be used to interconnect the structures and to connect pixel **200** to peripheral circuitry.

[**0046**] While the above embodiments are described in connection with the formation of pnp-type photodiodes the invention is not limited to these embodiments. The invention also has applicability to other types of photo-conversion devices, such as a photodiode formed from np or npn regions in a substrate, a photogate, or a photoconductor. If an npn-type photodiode is formed the dopant and conductivity types of all structures would change accordingly.

[**0047**] A typical single chip CMOS image sensor **1100** is illustrated by the block diagram of FIG. **11**. The image sensor **1100** has a pixel array **1111** containing a plurality of pixel cells arranged in rows and columns. The array **1111** includes one or more pixels **200** as described above in connection with FIGS. **2-10**.

[**0048**] The pixels of each row in array **1111** are all turned on at the same time by a row select line, and the pixel signals of each column are selectively output by respective column select lines. The row lines are selectively activated by a row driver **1151** in response to row address decoder **1150**. The column select lines are selectively activated by a column driver **1153** in response to column address decoder **1154**. The pixel array is operated by the timing and control circuit **1152**, which controls address decoders **1150**, **1154** for selecting the appropriate row and column lines for pixel signal readout.

[**0049**] The signals on the column readout lines typically include a pixel reset signal (V_{rst}) and a pixel image signal (V_{photo}) for each pixel. Both signals are read into a sample and hold circuit (S/H) **1155** associated with the column driver **1153**. A differential signal (V_{rst}-V_{photo}) is produced by differential amplifier (AMP) **1156** for each pixel, and each pixel's differential signal is amplified and digitized by analog to digital converter (ADC) **1157**. The analog to digital converter **1157** supplies the digitized pixel signals to an image processor **1158** which performs appropriate image processing before providing digital signals defining an image.

[**0050**] Although the invention is described in connection with a CMOS image sensor **1100**, the invention is also applicable to analogous structures of a charge coupled device (CCD) image sensor.

[**0051**] FIG. **12** illustrates a processor-based system **1200** including the image sensor **1100** of FIG. **11**. The processor-based system **1200** is exemplary of a system having digital circuits that could include CMOS image sensor devices. Without being limiting, such a system could include a computer system, camera system, scanner, machine vision, vehicle navigation, video phone, surveillance system, auto focus system, star tracker system, motion detection system, image stabilization system, and data compression system.

[**0052**] The processor-based system **1200**, for example a computer system, generally comprises a central processing unit (CPU) **1207**, such as a microprocessor, that communicates with an input/output (I/O) device **1201** over a bus **1204**. Image sensor **1100** also communicates with the CPU **1207** over bus **1204**. The processor-based system **1200** also includes random access memory (RAM) **1206**, and may include peripheral devices, such as a floppy disk drive **1202** and a compact disk (CD) ROM drive **1203**, which also communicate with CPU **1207** over the bus **1204**. Image sensor **1100** may be combined with a processor, such as a CPU, digital signal processor, or microprocessor, with or without memory storage on a single integrated circuit or on a different chip than the processor.

[**0053**] It is again noted that the above description and drawings are exemplary and illustrate preferred embodi-

ments that achieve the objects, features and advantages of the present invention. It is not intended that the present invention be limited to the illustrated embodiments. Any modification of the present invention which comes within the spirit and scope of the following claims should be considered part of the present invention.

1. A pixel cell comprising:

a substrate;

a reflective layer over the substrate, the reflective layer comprising a plurality of first sub-layers each having a first refractive index and at least one second sub-layer having a second refractive index, the plurality of first sub-layers stacked alternately with the at least one second sub-layer;

a semiconductor layer over the reflective layer;

a photo-conversion device at a surface of the semiconductor layer for receiving light reflected by the reflective layer and for generating charge in response to the reflected light.

2. The pixel cell of claim 1, wherein the reflective layer is approximately 0.5 μm thick.

3. The pixel cell of claim 1, wherein the reflective layer has a periodic structure.

4. The pixel cell of claim 3, wherein the reflective layer has a first sub-layer/second sub-layer periodic structure.

5. The pixel cell of claim 4, wherein the reflected light has a wavelength λ, and a period of the first sub-layer/second sub-layer structure is approximately λ/4.

6. The pixel cell of claim 4, wherein the reflected light has a wavelength within the range of approximately 650 nm to 750 nm, and a period of the first sub-layer/second sub-layer structure is approximately 175 nm.

7. The pixel cell of claim 1, wherein each of the first and the second sub-layers are one of a semiconductor material and a dielectric material.

8. The pixel cell of claim 1, wherein each of the first sub-layers are Si_xGe_{1-x} and the at least one second sub-layer is Si.

9. The pixel of claim 8, wherein x is within the range of approximately 0.8 to approximately 0.95.

10. The pixel cell of claim 1, wherein each of the first sub-layers are SiO_2 and the at least one second sub-layer is Si.

11. The pixel of claim 1, wherein the reflective layer is a Distributed Bragg Reflector mirror.

12. The pixel cell of claim 1, further comprising a plurality of second sub-layers.

13. A pixel cell comprising:

a substrate;

a plurality of layers of Si_xGe_{1-x};

a plurality of layers of Si, the plurality of Si_xGe_{1-x} layers stacked alternately with the plurality of Si layers to form an Si_xGe_{1-x}/Si structure over the substrate;

a semiconductor layer over the stacked plurality of Si_xGe_{1-x} layers and plurality of Si layers; and

a photo-conversion device at a surface of the semiconductor layer for receiving light reflected by the first and second reflective layers and for generating charge in response to the reflected light.

14. The pixel cell of claim 13, wherein the combined thickness of one Si_xGe_{1-x} layer and one Si layer stacked in contact with each other is approximately equal to λ/4, where λ is a predetermined wavelength of the reflected light.

15. A pixel cell comprising:

a substrate;

a plurality of layers of SiO_2;

a plurality of layers of Si, the plurality of SiO_2 layers stacked alternately with the plurality of Si layers to form an SiO_2/Si structure over the substrate;

a semiconductor layer over the stacked plurality of SiO_2 layers and plurality of Si layers; and

a photo-conversion device at a surface of the semiconductor layer for receiving light reflected by the first and second reflective layers and for generating charge in response to the reflected light.

16. The pixel cell of claim 15, wherein the combined thickness of one SiO_2 layer and one Si layer stacked in contact with each other is approximately equal to λ/4, where λ is a predetermined wavelength of the reflected light.

17. An image sensor comprising:

a substrate;

a reflective layer over the substrate, the reflective layer comprising a plurality of first sub-layers each having a first refractive index and at least one second sub-layer having a second refractive index;

a semiconductor layer over the reflective layer;

an array of pixel cells at a surface of the semiconductor layer, each pixel comprising a photo-conversion device for receiving light reflected from the reflective layer and for generating charge in response to the reflected light.

18. The image sensor of claim 17, wherein the reflective layer has a periodic structure.

19. The image sensor of claim 17, wherein the reflective layer has a first sub-layer/second sub-layer periodic structure.

20. The image sensor of claim 19, wherein the reflected light has a wavelength λ, and a period of the first sub-layer/second sub-layer structure is approximately λ/4.

21. The image sensor of claim 17, wherein each of the first and the at least one second sub-layers are one of a semiconductor material and a dielectric material.

22. The image sensor of claim 17, wherein each of the first sub-layers are Si_xGe_{1-x} and the at least one second sub-layer is Si.

23. The image sensor of claim 17, wherein each of the first sub-layers are SiO_2 and the at least one second sub-layer is Si.

24. The image sensor of claim 17, further comprising a plurality of second sub-layers.

25. The image sensor of claim 17, wherein the reflective layer is a Distributed Bragg Reflector mirror.

26. A processor system comprising:

a processor; and

an image sensor coupled to the processor, the image sensor comprising:

a substrate;

a reflective layer over the substrate, the reflective layer comprising a plurality of first sub-layers each having a first refractive index and at least one second sub-layer having a second refractive index;

a semiconductor layer over the reflective layer; and

an array of pixel cells at a surface of the semiconductor layer, each pixel comprising a photo-conversion device for receiving light reflected from the reflective layer and for generating charge in response to the reflected light.

27. The processor system of claim 26, wherein the image sensor is a CMOS image sensor.

28. The processor system of claim 26, wherein the image sensor is a Charge Coupled Device image sensor.

29-43. (canceled)

* * * * *