US 20080265349A1

(19) United States

(12) Patent Application Publication

Kasano et al.

(10) Pub. No.: US 2008/0265349 A1

(43) Pub. Date: Oct. 30, 2008

(54) SOLID-STATE IMAGE SENSOR

(76) Inventors: **Masahiro Kasano**, Osaka (JP); **Takumi Yamaguchi**, Kyoto (JP)

Correspondence Address:
MCDERMOTT WILL & EMERY LLP
600 13TH STREET, NW
WASHINGTON, DC 20005-3096 (US)

(21) Appl. No.: 11/662,263

(22) PCT Filed: Sep. 7, 2005

(86) PCT No.: PCT/JP05/16414

§ 371 (c)(1),
(2), (4) Date: Mar. 11, 2008

(30) Foreign Application Priority Data

Sep. 9, 2004 (JP) 2004-262869
Sep. 30, 2004 (JP) 2004-288646
Oct. 29, 2004 (JP) 2004-316394

Publication Classification

(51) Int. Cl.
H01L 31/0232 (2006.01)

(52) U.S. Cl. **257/432**; 257/E31.127

(57) ABSTRACT

An object of the present invention is to provide a solid-state image sensor including a filter membrane that has excellent light resistance and can be thinned. A solid-state image sensor **1** having a plurality of pixels, wherein each of the plurality of pixels includes a filter membrane **21** for transmitting light of a predetermined color, and a photoelectric conversion unit **17** for converting the light transmitted through the filter membrane **21** into a charge; the filter membrane **21** is a single layer film composed of an inorganic material; and an optical thickness of the single layer film is smaller than a thickness equivalent to one half of a wavelength of the predetermined color, by a thickness corresponding to an amount of the light of the predetermined color absorbed by the inorganic material.

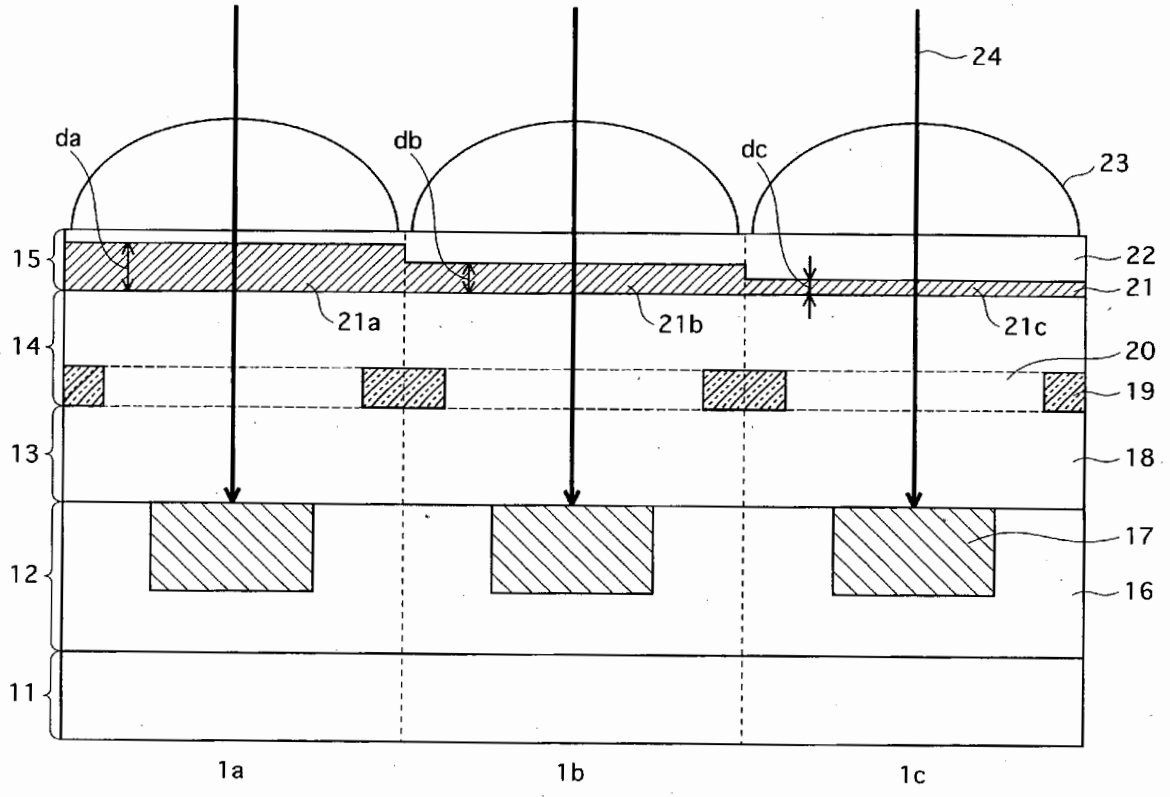

FIG.1

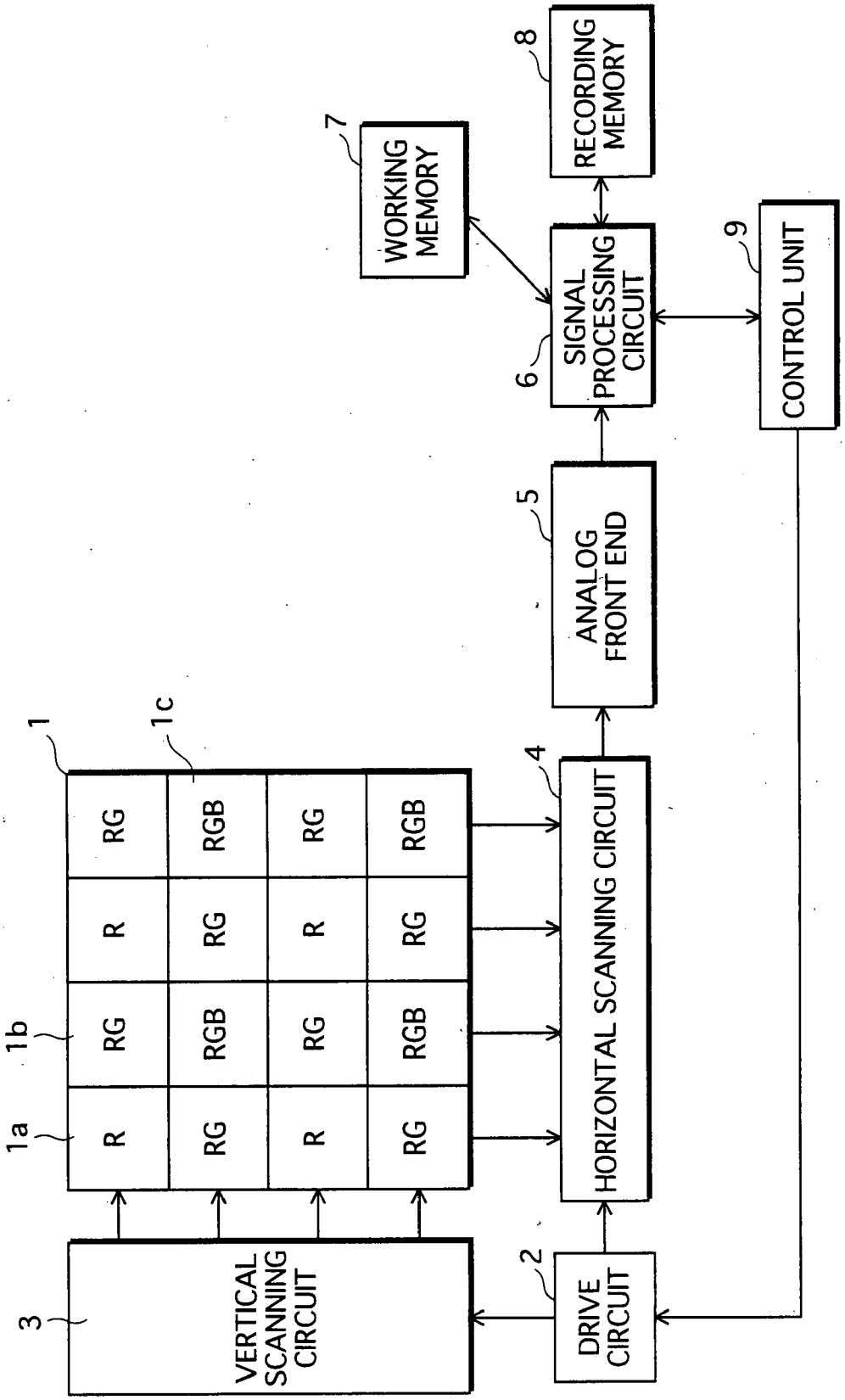
1
1a
1b
1c
R
RG
RGB
3
VERTICAL SCANNING CIRCUIT
2
DRIVE CIRCUIT
4
HORIZONTAL SCANNING CIRCUIT
5
ANALOG FRONT END
6
SIGNAL PROCESSING CIRCUIT
7
WORKING MEMORY
8
RECORDING MEMORY
9
CONTROL UNIT

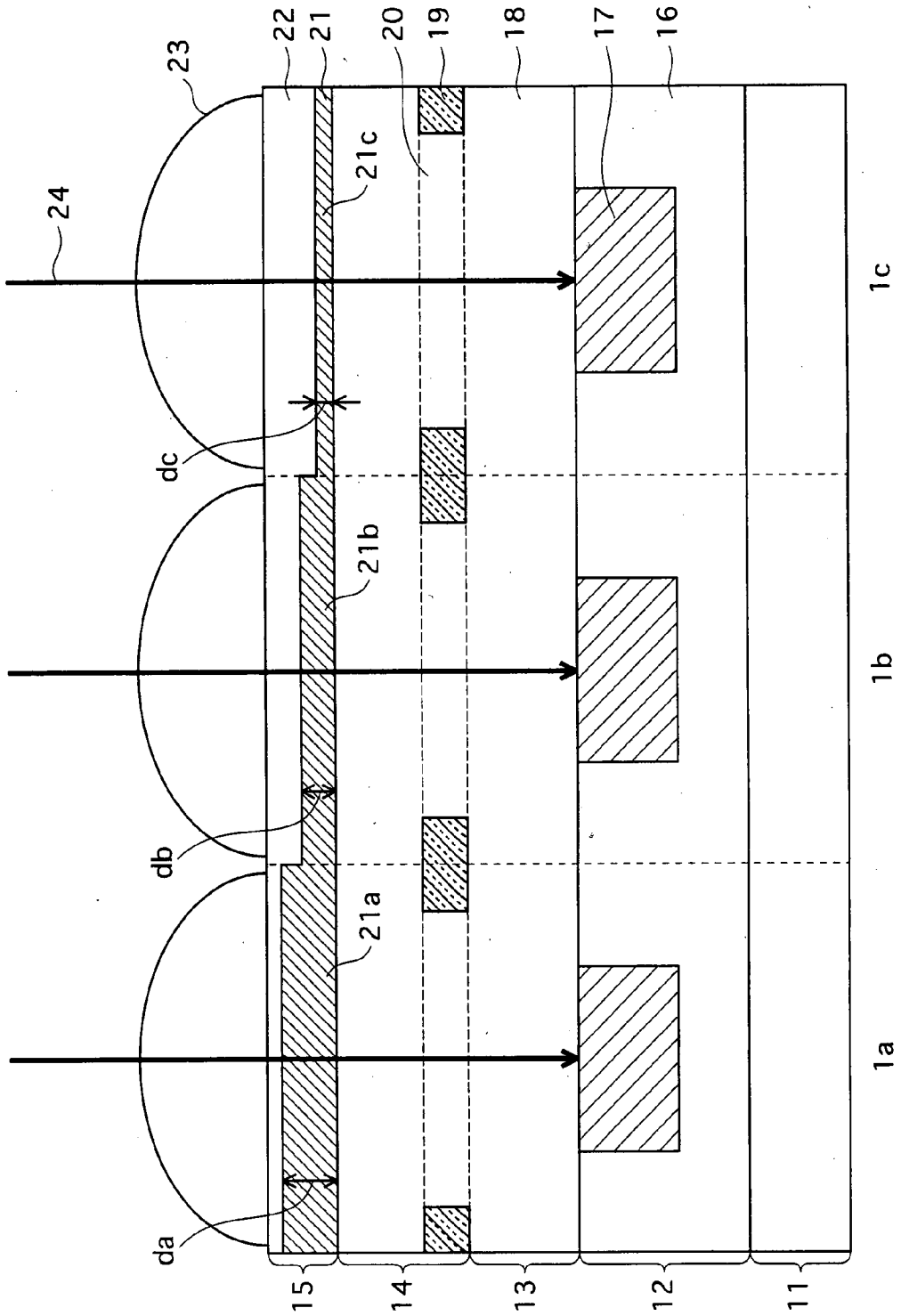

FIG.2

FIG.3

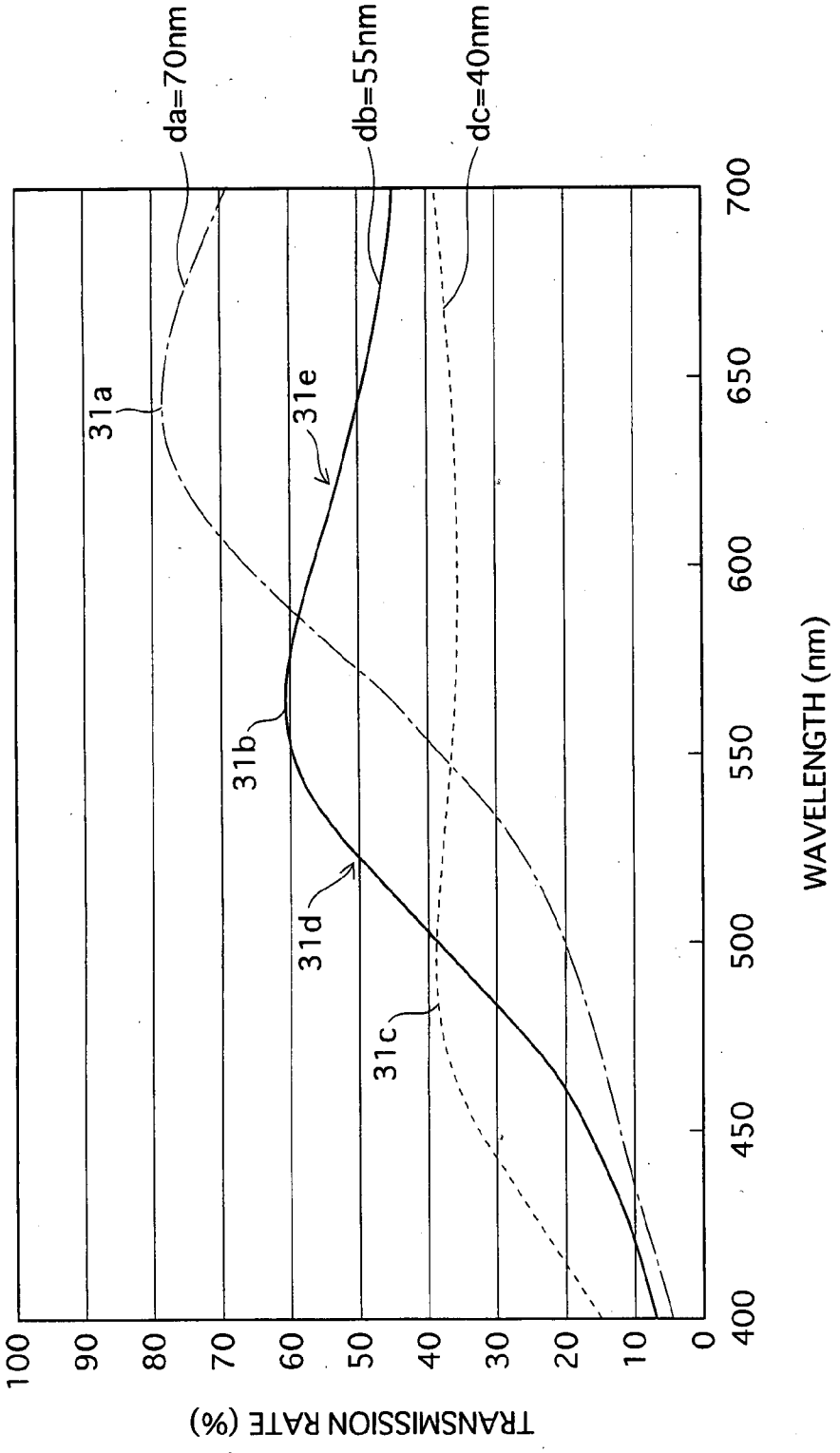
da=70nm
db=55nm
dc=40nm
31a
31b
31c
31d
31e
TRANSMISSION RATE (%)
100
90
80
70
60
50
40
30
20
10
0
400
450
500
550
600
650
700
WAVELENGTH (nm)

FIG.4

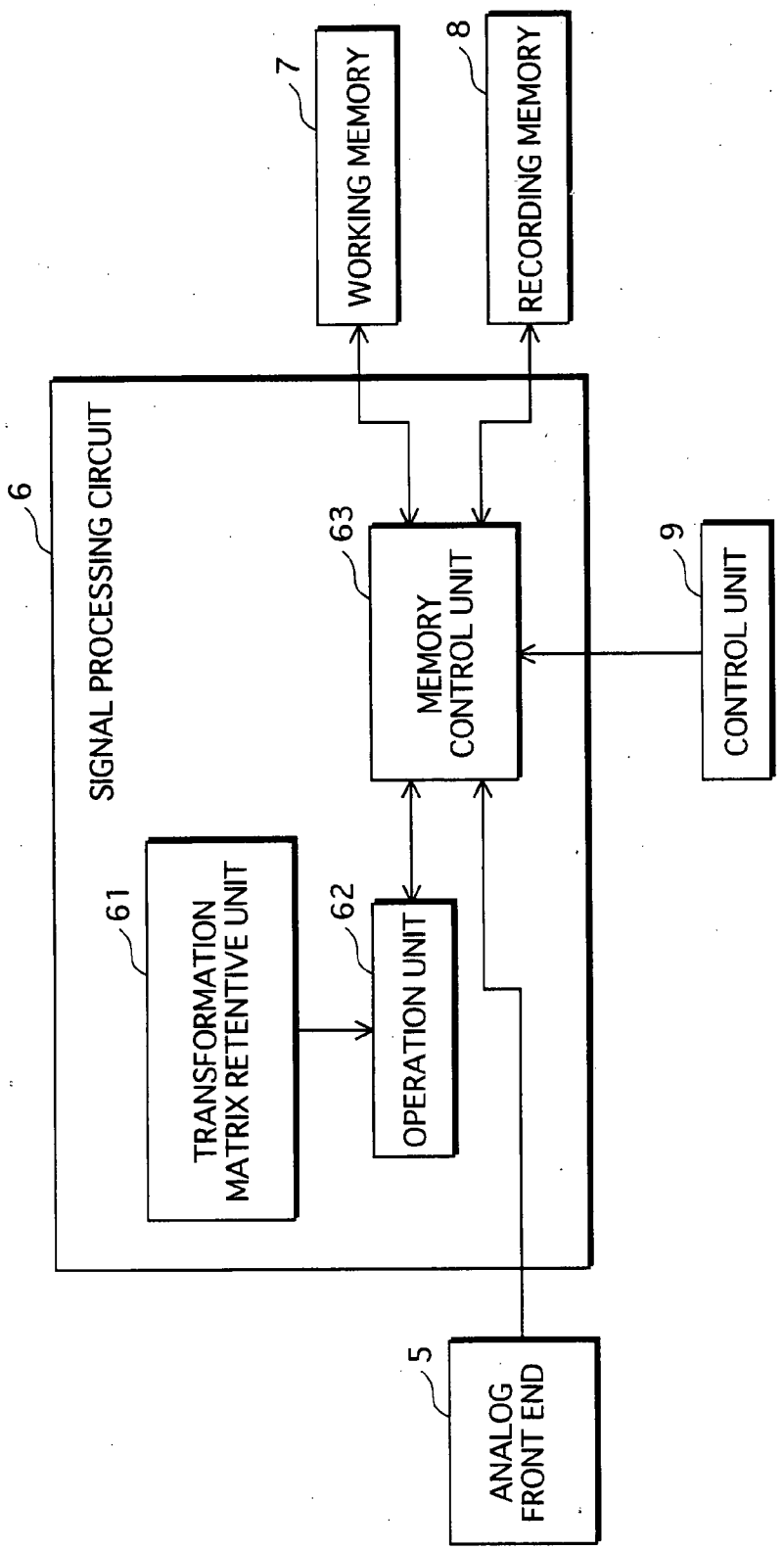
6
SIGNAL PROCESSING CIRCUIT
61
TRANSFORMATION MATRIX RETENTIVE UNIT
62
OPERATION UNIT
63
MEMORY CONTROL UNIT
7
WORKING MEMORY
8
RECORDING MEMORY
9
CONTROL UNIT
5
ANALOG FRONT END

FIG.5A

$$\begin{bmatrix} Sa \\ Sb \\ Sc \end{bmatrix} = \begin{bmatrix} W_{11} & W_{12} & W_{13} \\ W_{21} & W_{22} & W_{23} \\ W_{31} & W_{32} & W_{33} \end{bmatrix} \begin{bmatrix} B \\ G \\ R \end{bmatrix}$$

FIG.5B

$$\begin{bmatrix} B \\ G \\ R \end{bmatrix} = \begin{bmatrix} X_{11} & X_{12} & X_{13} \\ X_{21} & X_{22} & X_{23} \\ X_{31} & X_{32} & X_{33} \end{bmatrix} \begin{bmatrix} Sa \\ Sb \\ Sc \end{bmatrix}$$

FIG.6

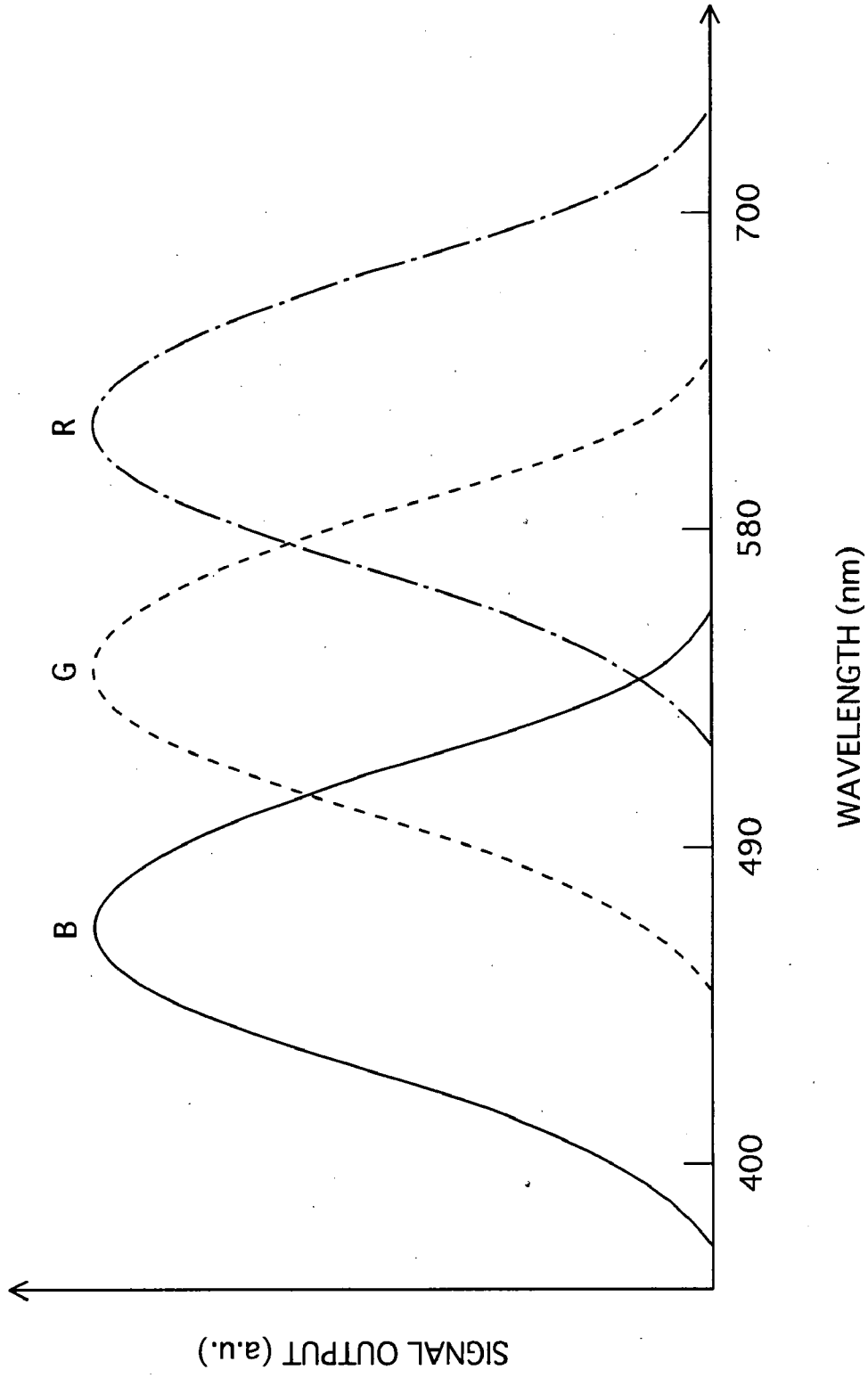

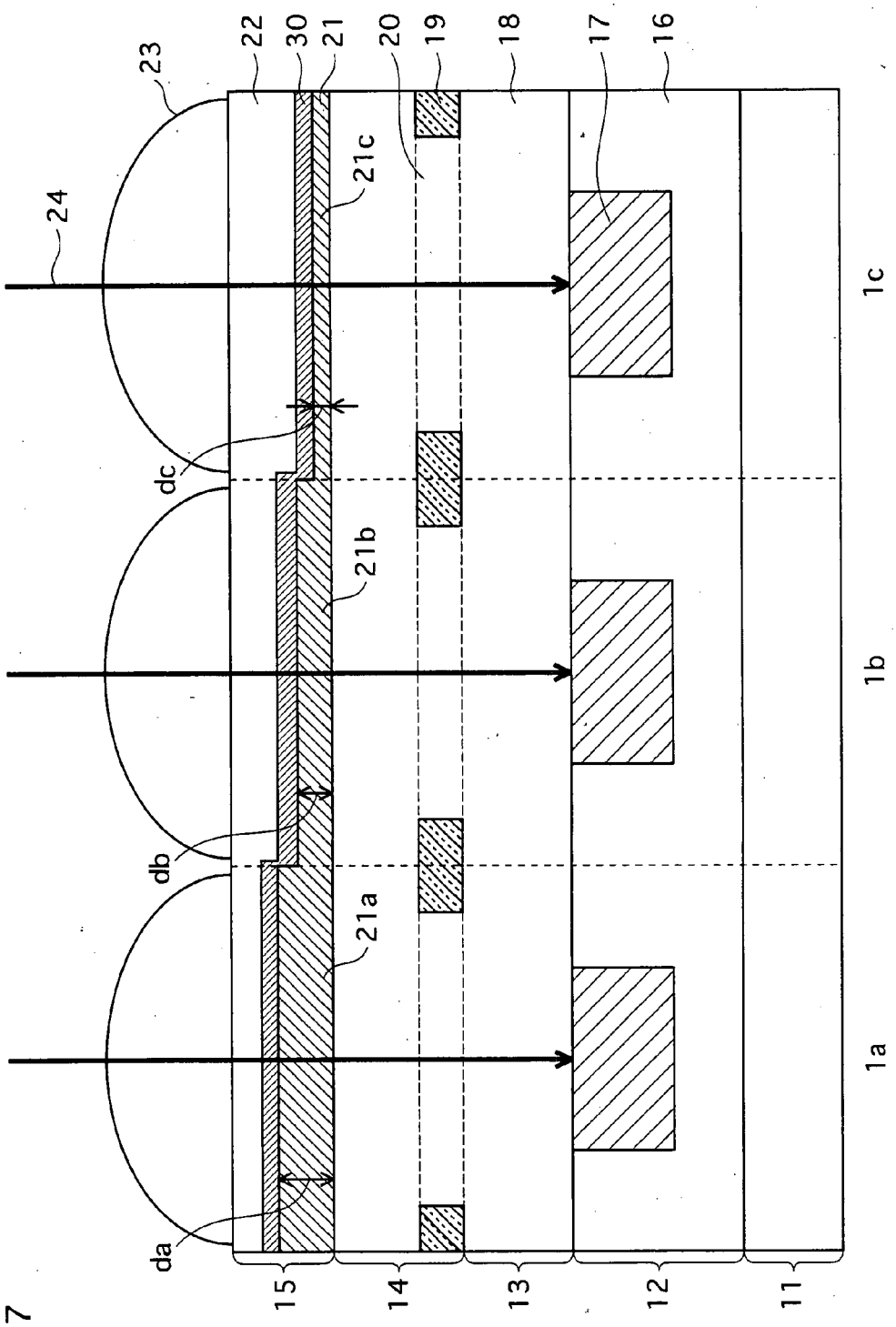
23
24
22
30
21
20
19
18
17
16
21c
21b
21a
dc
db
da
15
14
13
12
11
1c
1b
1a

FIG.7

FIG.8

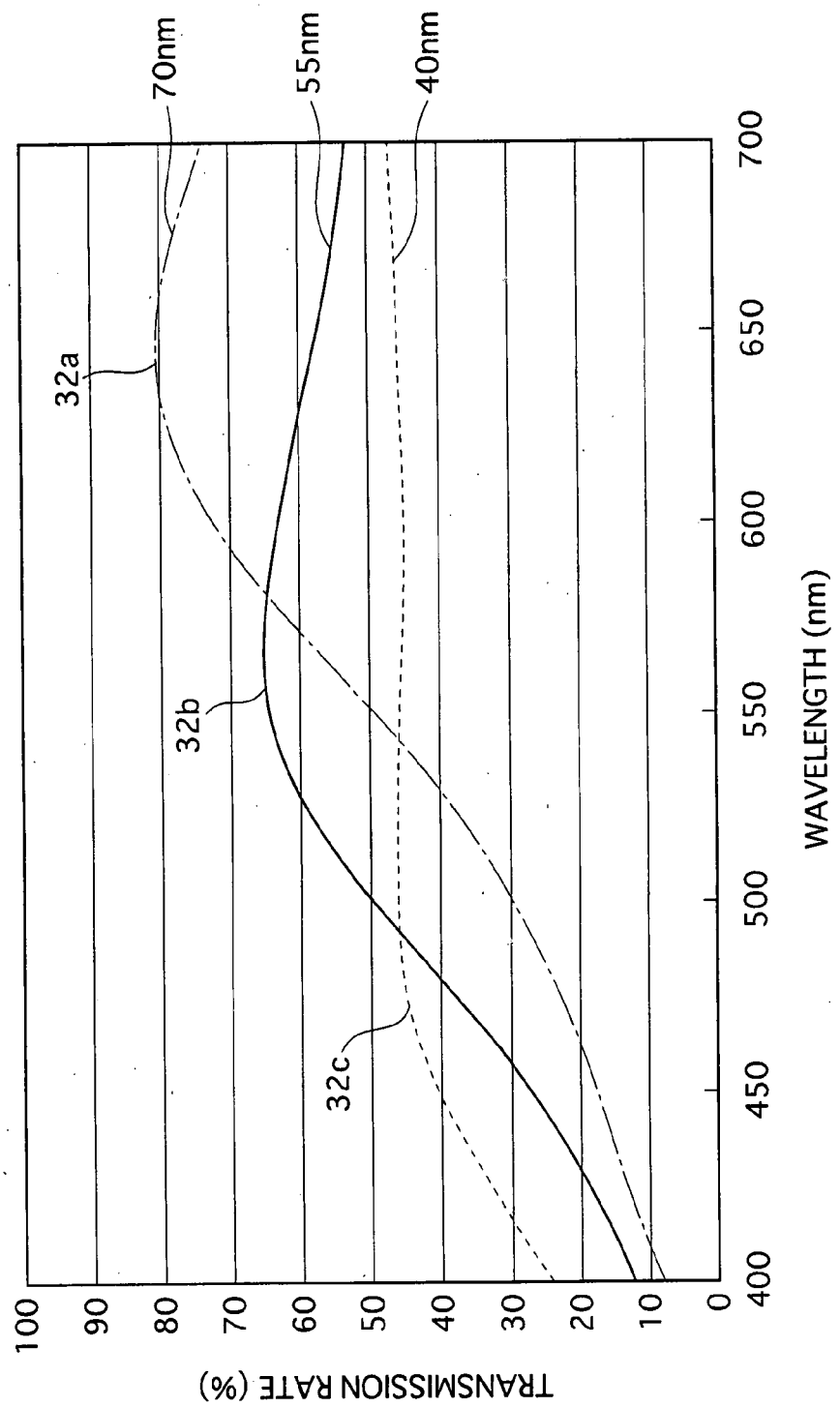
70nm
55nm
40nm
32a
32b
32c
100
90
80
70
60
50
40
30
20
10
0
TRANSMISSION RATE (%)
400
450
500
550
600
650
700
WAVELENGTH (nm)

FIG.9

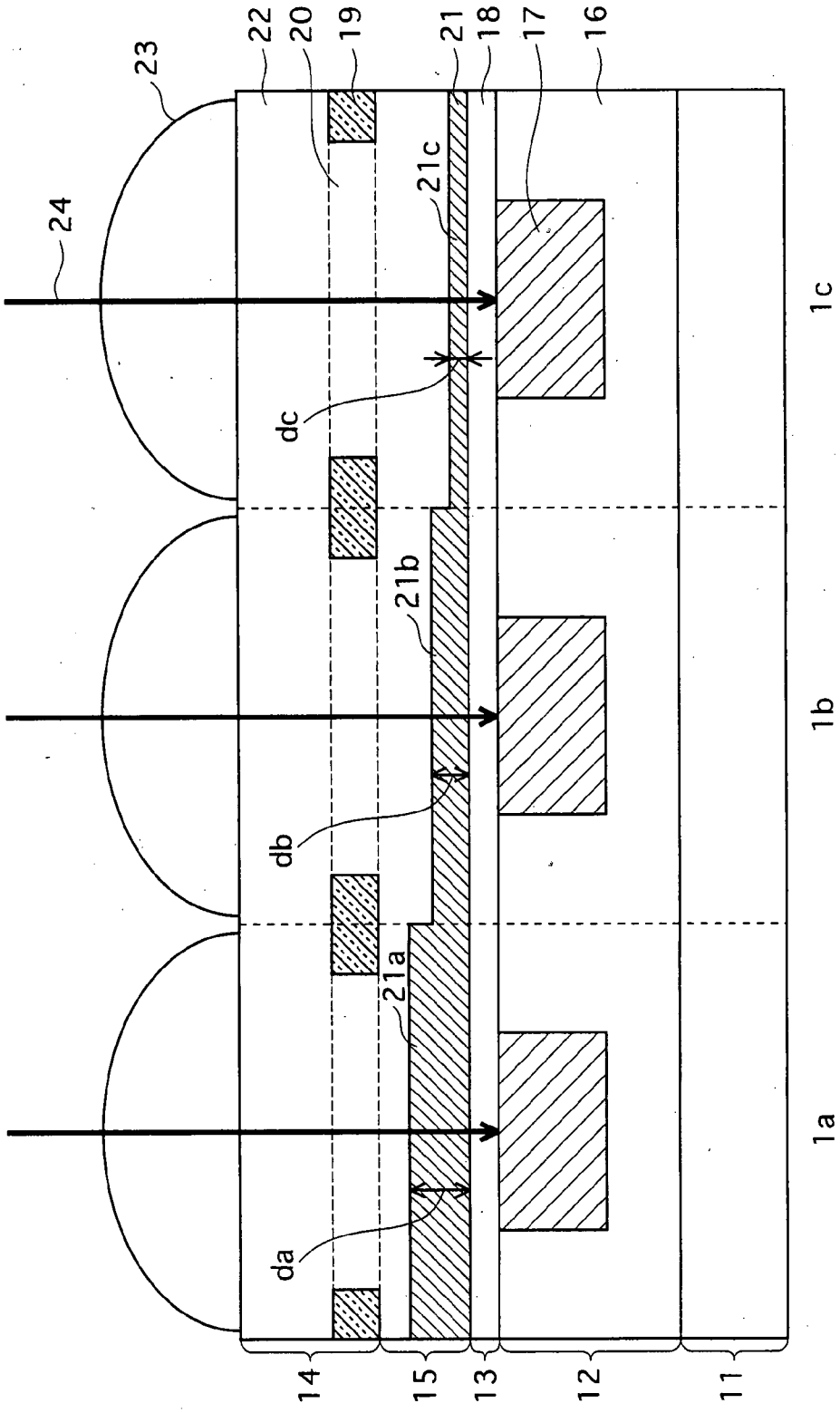

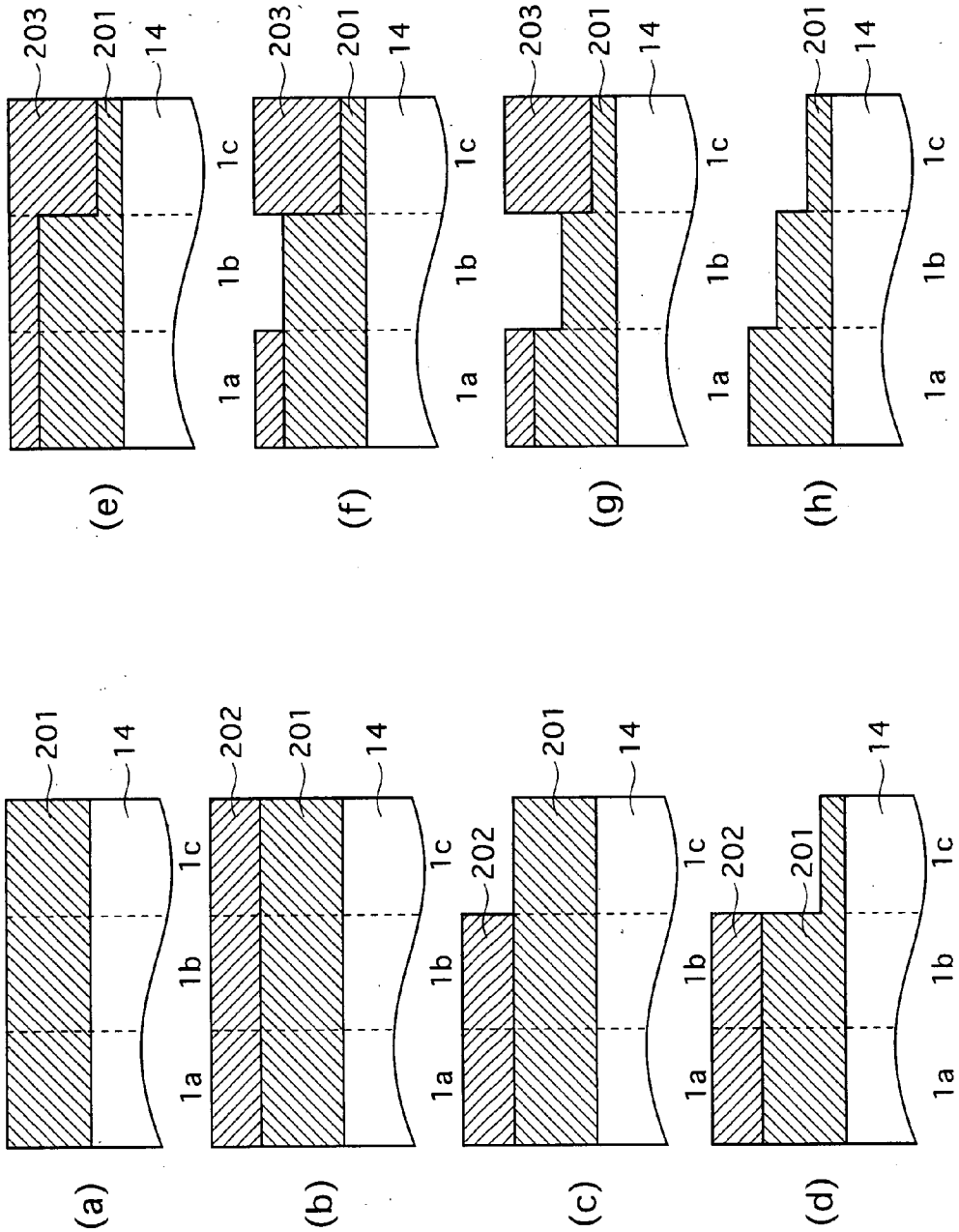

FIG.10

FIG.11

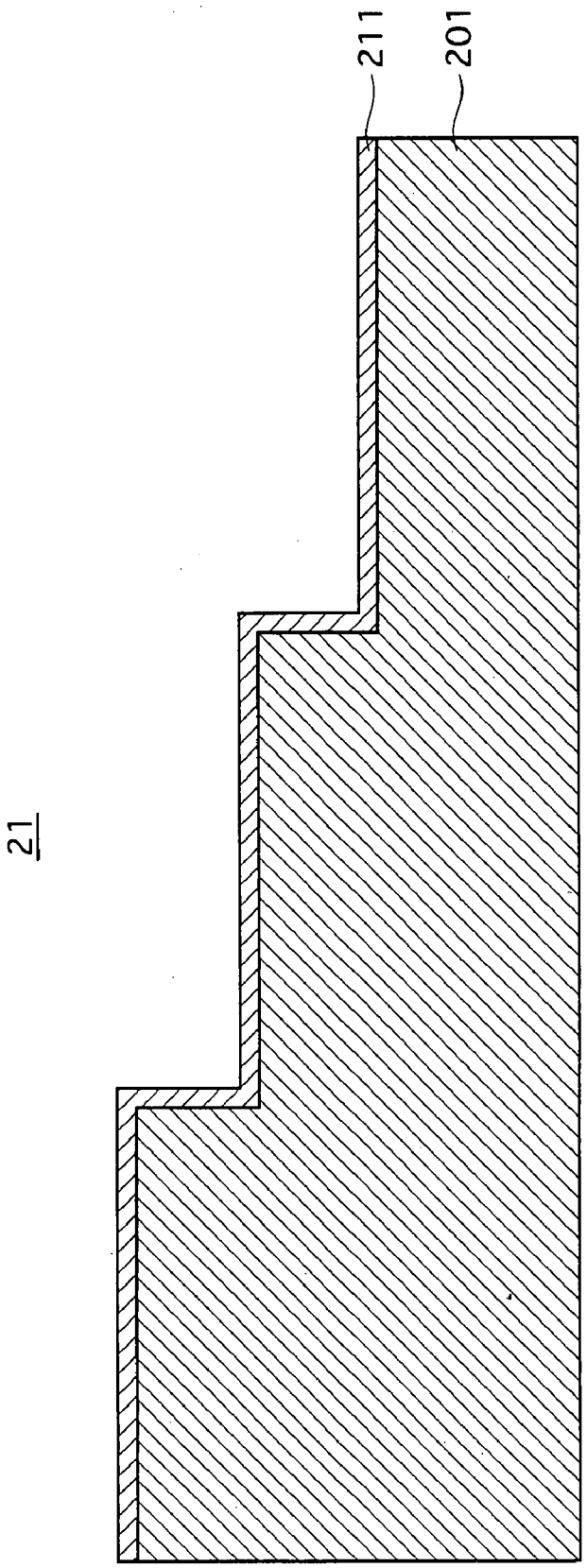

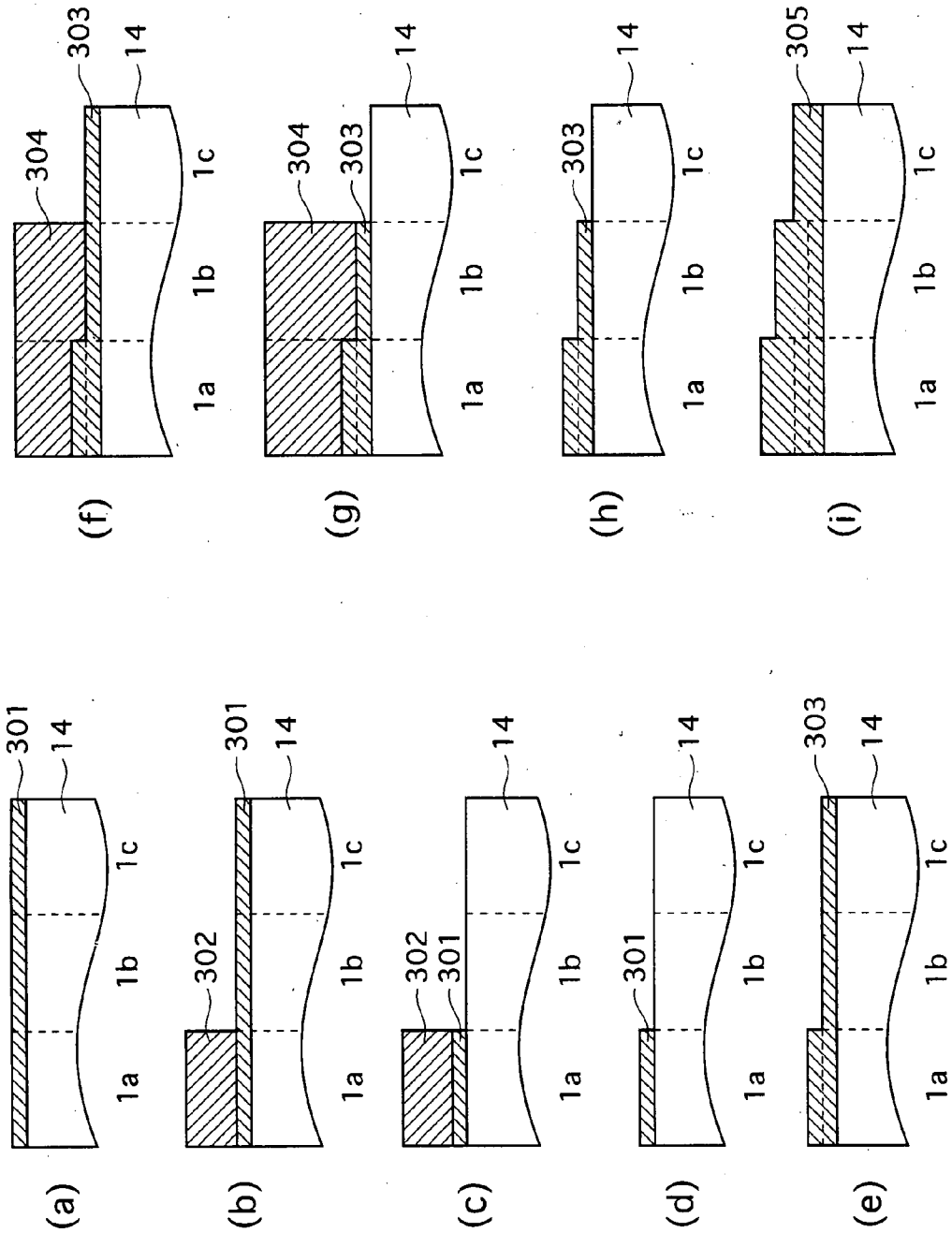
(a)
301
14
1a
1b
1c
(b)
302
301
14
1a
1b
1c
(c)
302
301
14
1a
1b
1c
(d)
301
14
1a
1b
1c
(e)
303
14
1a
1b
1c
(f)
304
303
14
1a
1b
1c
(g)
304
303
14
1a
1b
1c
(h)
303
14
1a
1b
1c
(i)
305
14
1a
1b
1c

FIG.12

FIG.13

21

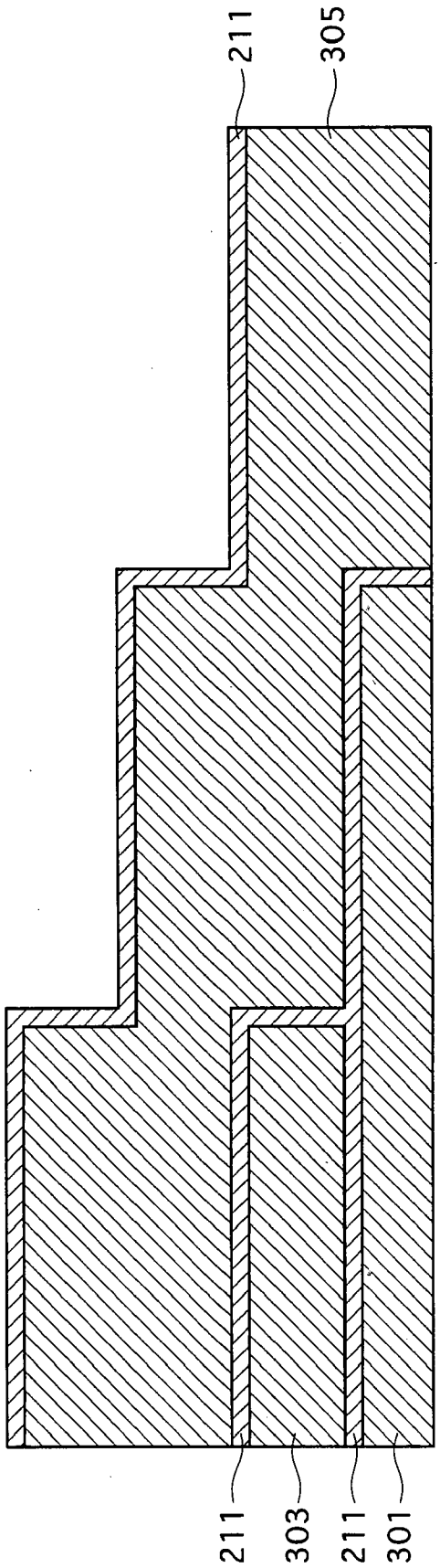

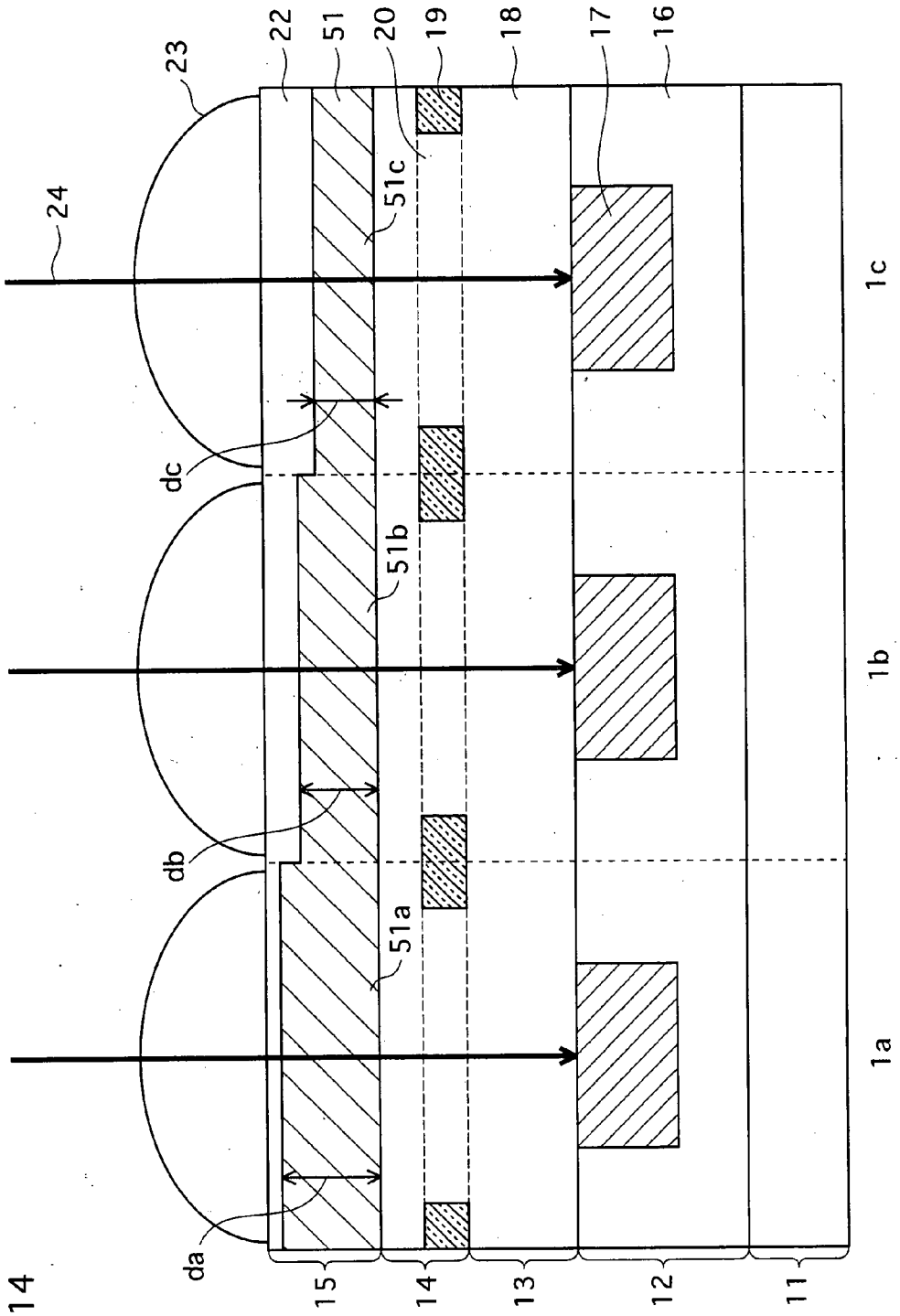

FIG.14

FIG.15

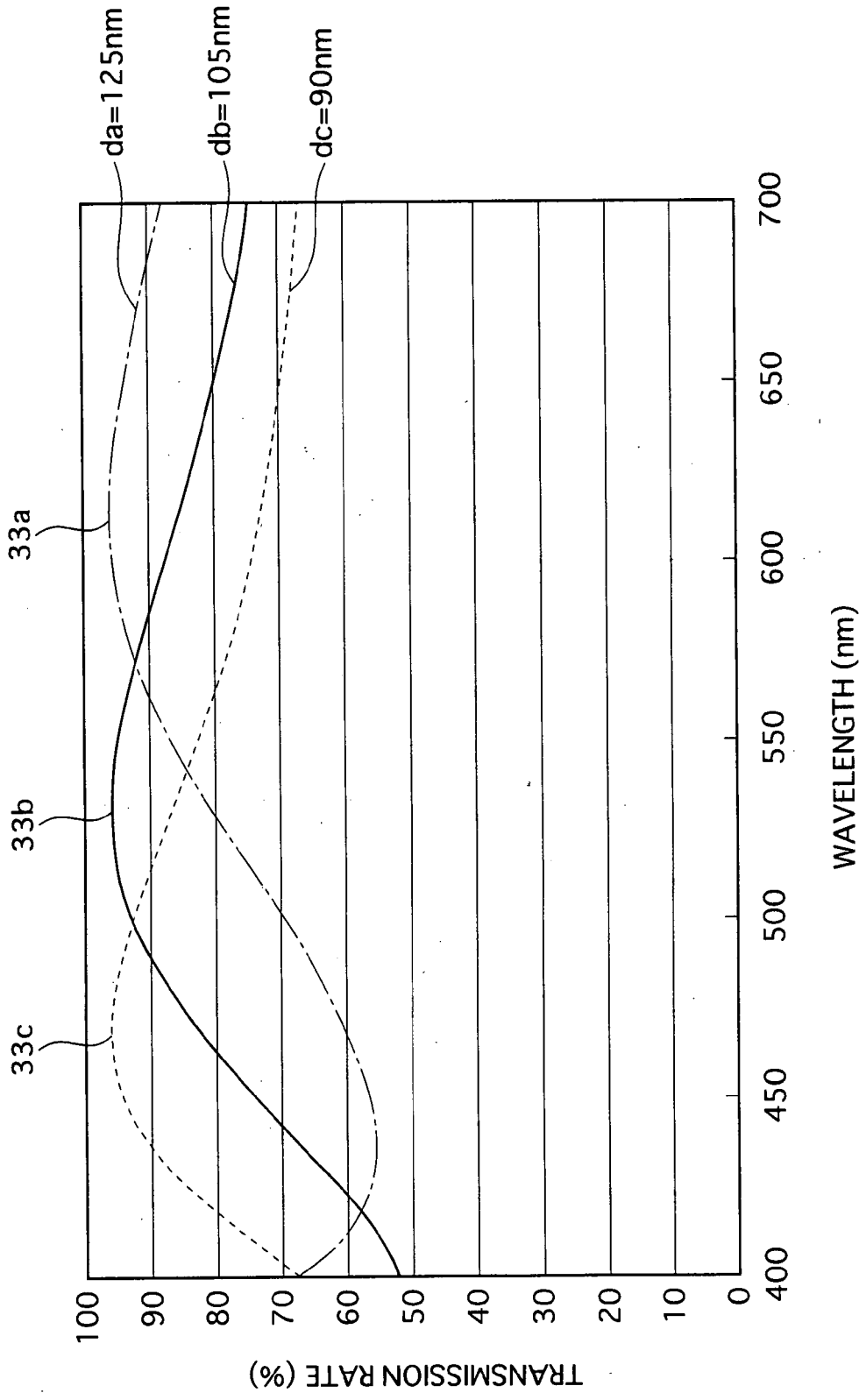
da=125nm
db=105nm
dc=90nm
33a
33b
33c
100
90
80
70
60
50
40
30
20
10
0
TRANSMISSION RATE (%)
400
450
500
550
600
650
700
WAVELENGTH (nm)

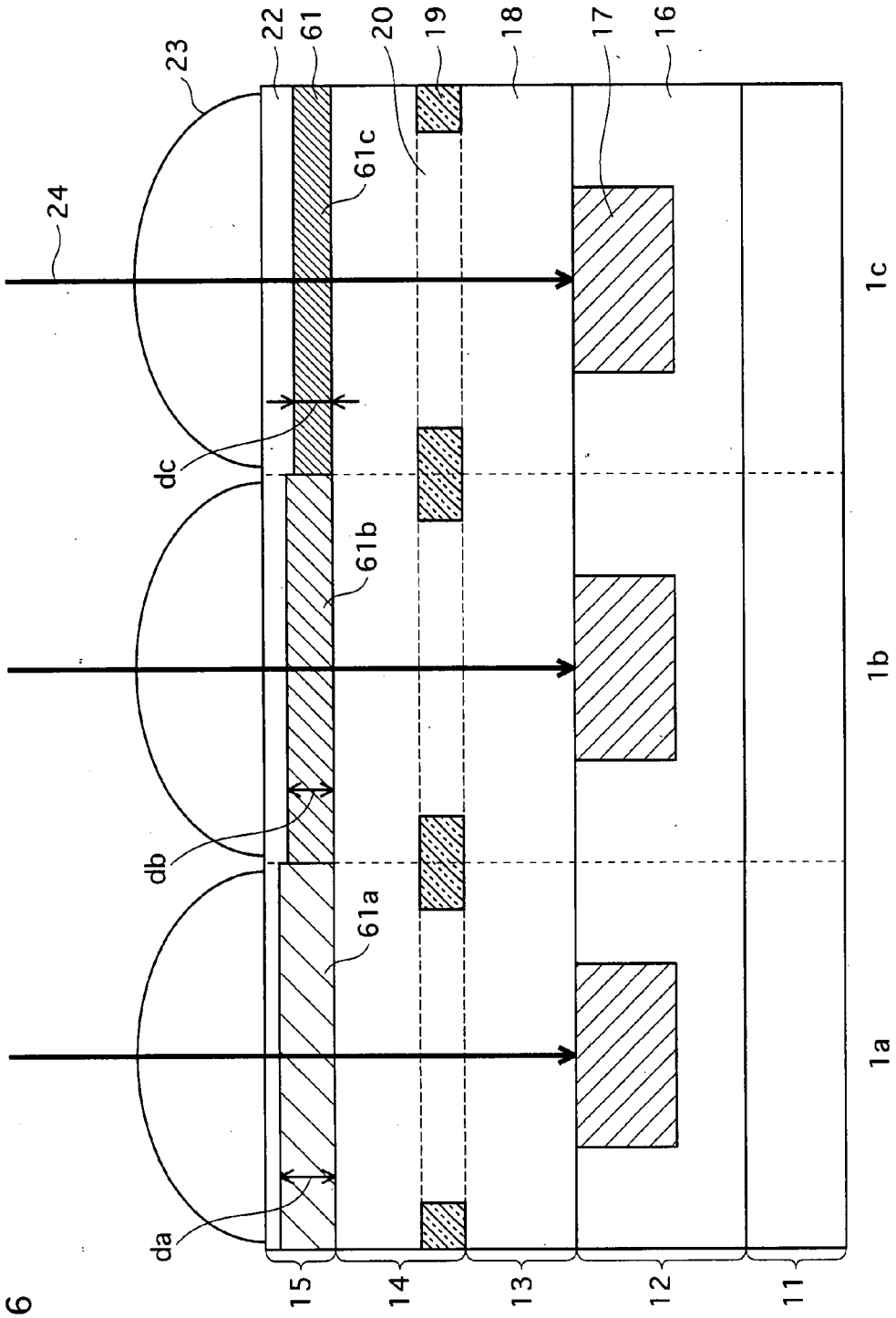

FIG.16

FIG.17

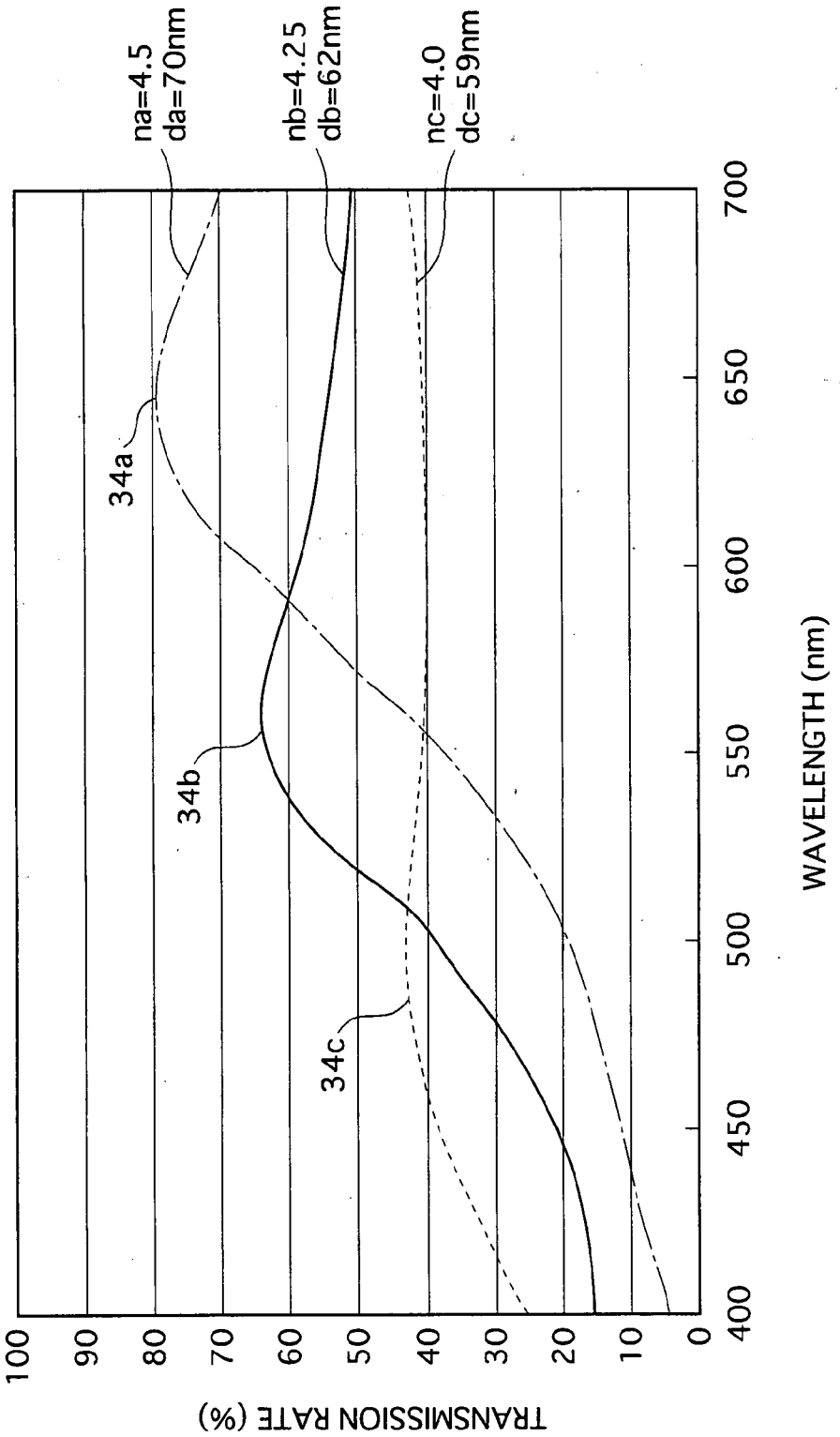
na=4.5
da=70nm
nb=4.25
db=62nm
nc=4.0
dc=59nm
34a
34b
34c
TRANSMISSION RATE (%)
100
90
80
70
60
50
40
30
20
10
0
400
450
500
550
600
650
700
WAVELENGTH (nm)

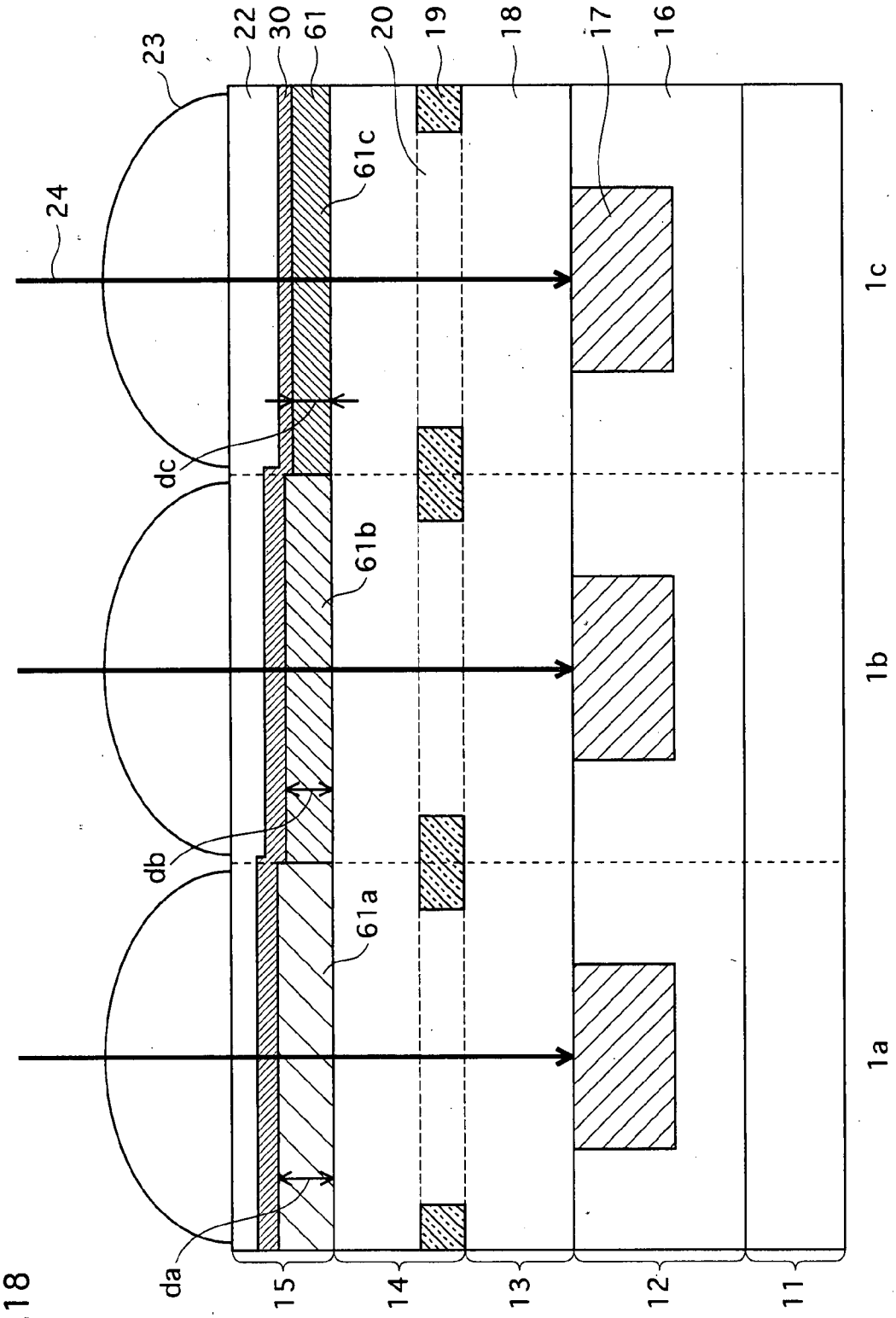
23
24
22
30
61
20
19
18
17
16
61c
61b
61a
dc
db
da
1c
1b
1a
15
14
13
12
11

FIG.18

FIG.19

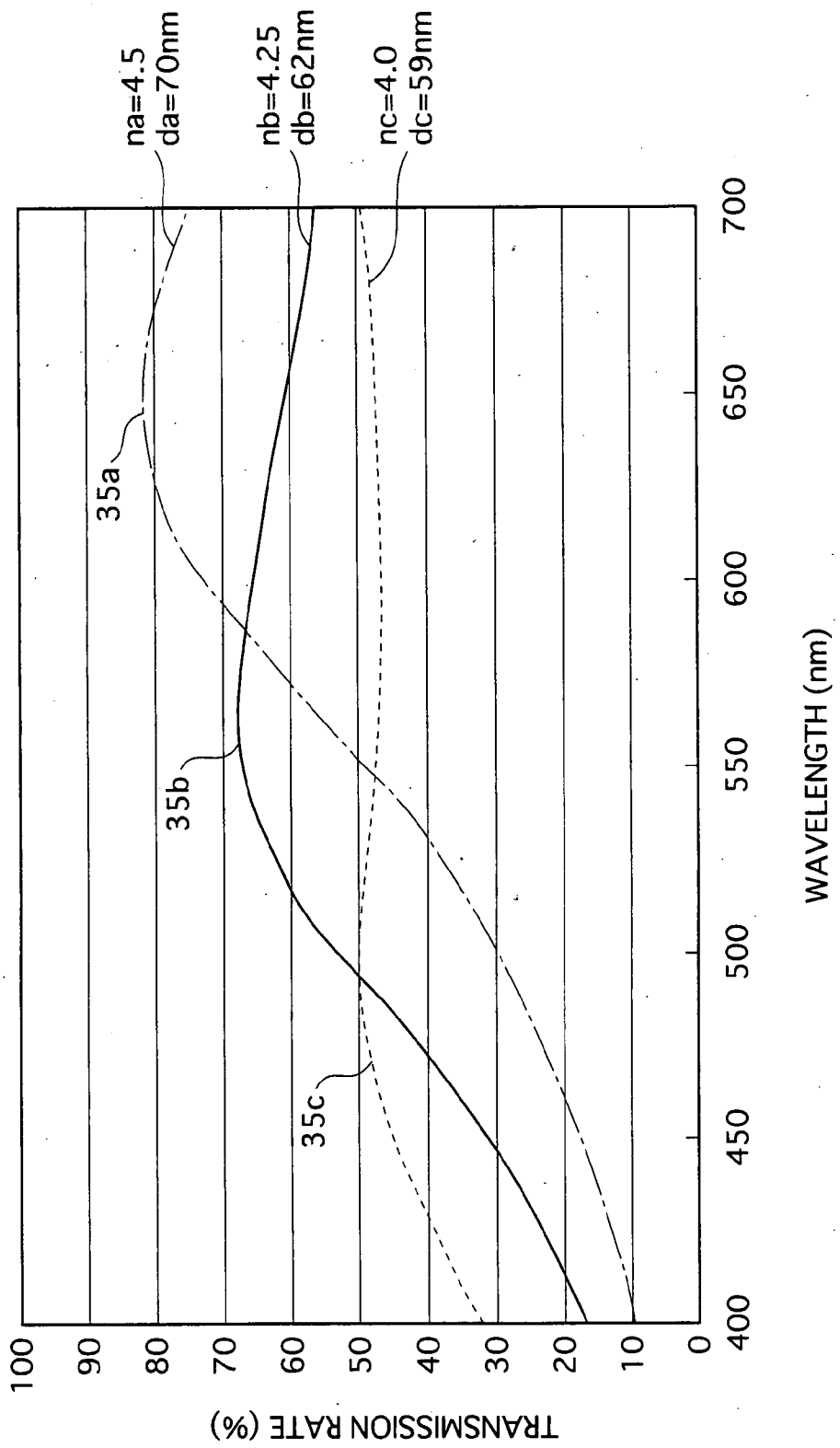
na=4.5
da=70nm
nb=4.25
db=62nm
nc=4.0
dc=59nm
35a
35b
35c
100
90
80
70
60
50
40
30
20
10
0
TRANSMISSION RATE (%)
400
450
500
550
600
650
700
WAVELENGTH (nm)

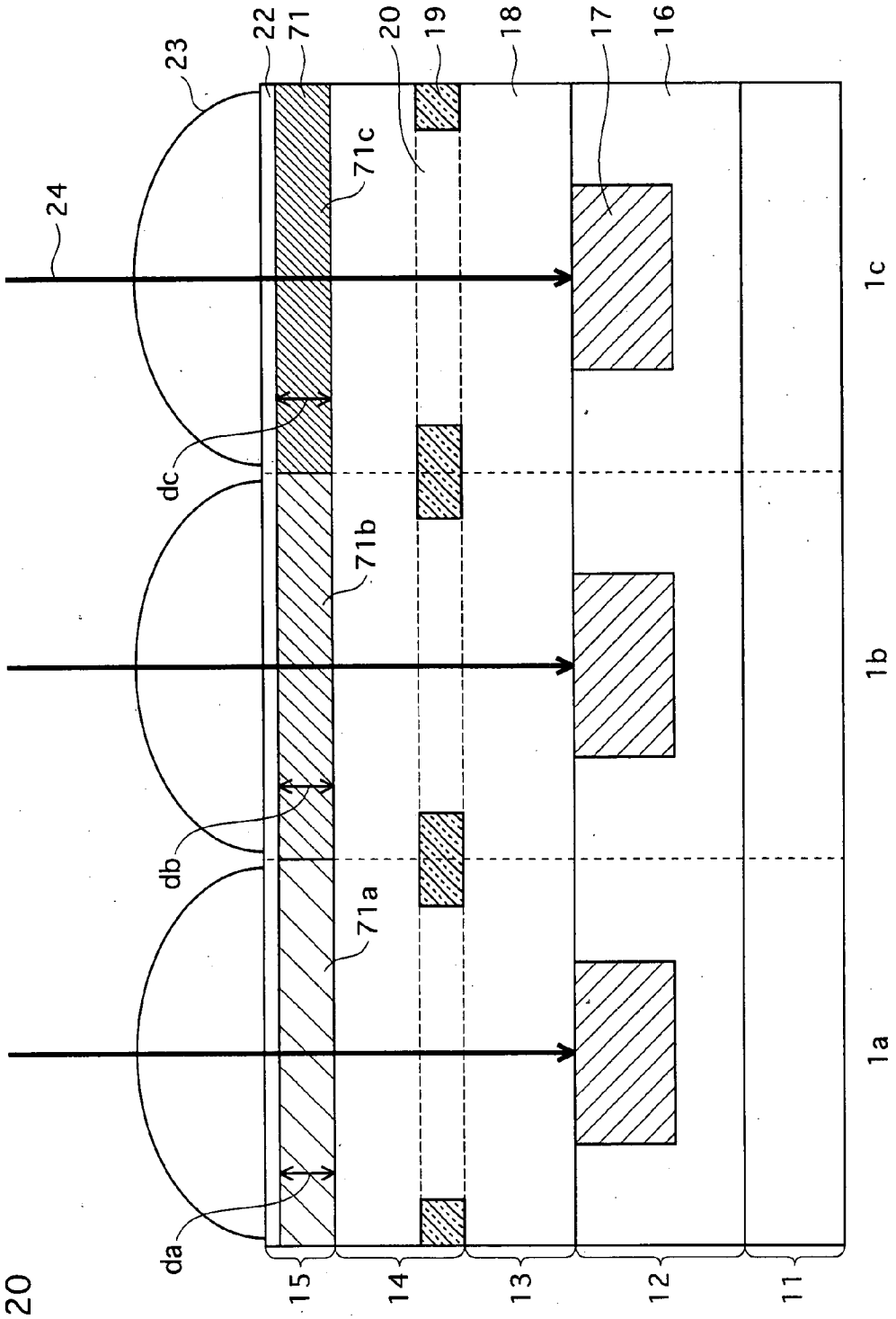

FIG.20

FIG.21

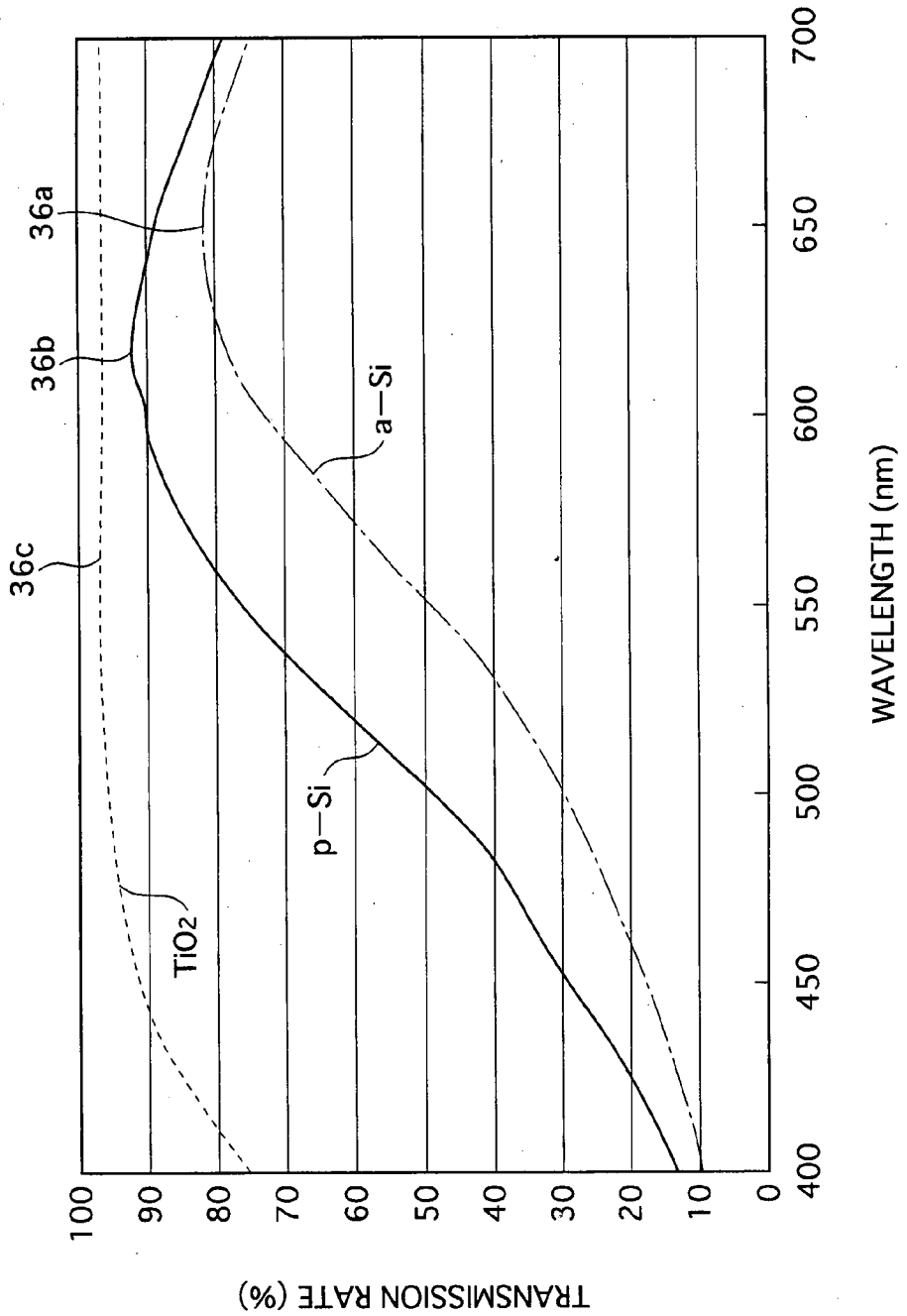
36c
36b
36a
TiO2
p—Si
a—Si
100
90
80
70
60
50
40
30
20
10
0
400
450
500
550
600
650
700
TRANSMISSION RATE (%)
WAVELENGTH (nm)

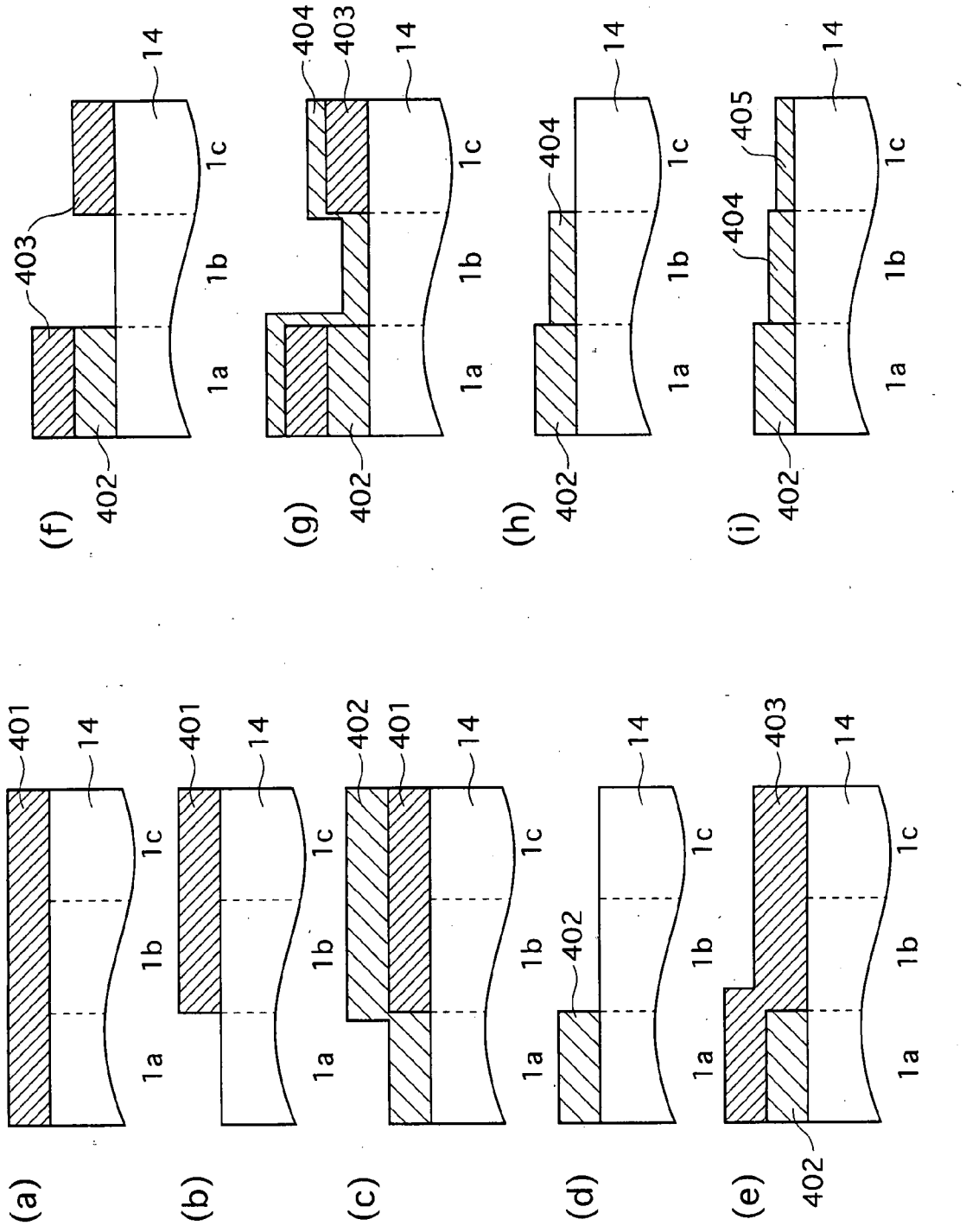
(a)
401
14
1a
1b
1c
(b)
401
14
1a
1b
1c
(c)
402
401
14
1a
1b
1c
(d)
402
14
1a
1b
1c
(e)
403
14
402
1a
1b
1c
(f)
403
14
402
1a
1b
1c
(g)
404
403
14
402
1a
1b
1c
(h)
404
14
402
1a
1b
1c
(i)
405
404
14
402
1a
1b
1c

FIG.22

SOLID-STATE IMAGE SENSOR

TECHNICAL FIELD

[0001] The present invention relates to a solid-state image sensor used for a digital camera and the like, and especially relates to a filter membrane for color separation.

BACKGROUND ART

[0002] A solid-state image sensor is composed of a plurality of pixels, and each of the plurality of pixels includes a filter membrane and a photoelectric conversion unit. The filter membrane is provided for color separation of light. For example, a filter membrane of each of colors of red (R), green (G), and blue (B) is provided as a primary color filter, and a filter membrane of each of colors of cyan (C), magenta (M), yellow (Y), and green (G) is provided as a complementary color filter. The photoelectric conversion unit converts light transmitted through the filter membrane into a charge.

[0003] The converted charge amount is externally outputted as a signal corresponding to the amount of received light of the photoelectric conversion unit. (a patent document 1).

[0004] A conventional filter membrane is composed of a transparent resin and the like such as an acrylic resin in which a pigment and a dye as an organic material are dispersed (a patent document 2). In other words, color separation can be realized by using a pigment and a dye according to each of the colors.

Patent Document 1: Japanese Published Patent Application No. H05-6986

Patent Document 2: Japanese Published Patent Application No. H07-311310

DISCLOSURE OF THE INVENTION

Problems the Invention is Going to Solve

[0005] However, the filter membrane has the following problem.

[0006] A first problem is that light resistance is not enough because the filter membrane is composed of an organic material. For example, an organic pigment has a characteristic of being subjected to color fading by being exposed to light. If color fading occurs, color separation cannot be performed properly because a transmission characteristic of the filter membrane changes.

[0007] A second problem is that it is difficult to thin the filter membrane that is composed of a dispersed pigment and the like. Regarding to this kind of filter membrane, the smaller a film thickness of the filter membrane is, the higher transparency is. Therefore, a color separation characteristic of the filter membrane degrades. When a pigment is used, it is restricted to thin the filter membrane because of a particle size of a pigment. A color mixture among a plurality of pixels can be effectively prevented by thinning a filter membrane. Because a color mixture is likely to occur with miniaturization of pixels in recent years, a film thickness of a filter membrane is increasingly required to be smaller.

[0008] An object of the present invention is to provide a solid-state image sensor including a filter membrane that has more excellent light resistance than a conventional filter membrane and can be thinned.

Means of Solving the Problems

[0009] The above problem is solved by a solid-state image sensor having a plurality of pixels, wherein each of the plurality of pixels includes a filter membrane for transmitting light of a predetermined color, and a photoelectric conversion unit for converting the light transmitted through the filter membrane into a charge; the filter membrane is a single layer film composed of an inorganic material; and an optical thickness of the single layer film is smaller than a thickness equivalent to one half of a wavelength of the predetermined color, by a thickness corresponding to an amount of the light of the predetermined color absorbed by the inorganic material.

EFFECTS OF THE INVENTION

[0010] With the above-stated construction, the filter membrane is composed of an inorganic material. Therefore, the filter membrane has more excellent light resistance than a conventional filter membrane. Also, an optical thickness of the single layer film is smaller than a thickness equivalent to one half of a wavelength of the predetermined color, by a thickness corresponding to an amount of the light of the predetermined color absorbed by the inorganic material. This enables a local maximal value of a light transmittance to appear at a wavelength of the predetermined color in a transmission spectrum of the filter membrane. Therefore, an optical thickness of the filter membrane can be thinned to a thickness equivalent to one half of a wavelength of each color without degrading a color separation characteristic of the filter membrane.

[0011] Also, the larger an absorption coefficient of the inorganic material at a light wavelength of the predetermined color is, the smaller the optical thickness of the single layer film is.

[0012] This can prevent a transmittance of the filter membrane from being degraded because of a large light absorption coefficient.

[0013] Moreover, a composition of the inorganic material is identical for the plurality of pixels.

[0014] With the above-stated construction, since each of the filter membranes is composed of a same material, there is no need to manage a material according to colors in a manufacturing process of the filter membrane. Therefore, the manufacturing cost of the filter membrane can be reduced.

[0015] Furthermore, a composition of the inorganic material is different according to which of a plurality of colors is to be transmitted; and the shorter a wavelength of each of the colors is, the smaller a refractive index of the inorganic material is.

[0016] With the above-stated construction, a difference of a physical thickness of the filter membrane can be small among pixels each having a different color to be transmitted. Therefore, a layer in which the filter membrane is formed can be planarized easily.

[0017] Also, a refractive index of the inorganic material is equal to or larger than 3.

[0018] Because a refractive index of the filter membrane is equal to or more than 3, a refracting angle is small even if oblique incident light enters in the filter membrane. Therefore, a color mixture among pixels can be prevented.

[0019] Moreover, the inorganic material is amorphous silicon, polysilicon, single-crystal silicon, or a material mainly containing silicon.

[0020] An absorption coefficient of amorphous silicon, polysilicon, single-crystal silicon, or a material mainly containing silicon is large. Therefore, color separation can be realized even if the filter membrane is extremely thin.

[0021] Also, a refractive index of amorphous silicon, polysilicon, single-crystal silicon, or a material mainly containing silicon is about 4 to 5 and larger compared to a normal insulating film and the like (a refractive index of a silicon dioxide film is 1.46, for example). Therefore, a refracting angle is small even if oblique incident light enters in the filter membrane, and a color mixture among pixels can be prevented.

[0022] Moreover, with regard to amorphous silicon, a film can be formed at a low temperature. Therefore, the filter membrane can be formed after a light shielding film such as low-melting aluminum is formed. As a result, a manufacturing procedure can be changed freely. Furthermore, if amorphous silicon is used, a stress on a photoelectric conversion unit can be reduced. Therefore, the damage to the photoelectric conversion unit can be reduced.

[0023] Furthermore, the inorganic material is titanium oxide, tantalum oxide, or niobium oxide.

[0024] With regard to titanium oxide (titanium dioxide and the like), tantalum oxide (tantalum pentoxide and the like) or niobium oxide (niobium pentoxide and the like), a light absorption coefficient is small in an optical wavelength region. Therefore, a transmittance of the filter membrane can be improved. As a result, the solid-state image sensor having a high sensitivity can be realized.

[0025] Also, a refractive index of titanium oxide, tantalum oxide or niobium oxide is equal to or larger than 2 that is relatively large in dielectric materials. Therefore, titanium oxide, tantalum oxide or niobium oxide is suitable for a material for forming an interference filter.

[0026] Moreover, each of the plurality of pixels further includes an antireflection film that is provided on a main surface of the filter membrane facing a light source and has a smaller refractive index than the filter membrane.

[0027] With the above-stated construction, a difference of a refractive index between media through which incident light passes is small, and reflection of incident light on the filter membrane surface decreases. Therefore, the solid-state image sensor having a high sensitivity can be realized. Also, a peak wavelength of alight transmittance of the filter membrane can be controlled by varying a thickness of the antireflection film. As a result, a color separation characteristic and a design freedom can be improved.

[0028] Furthermore, the antireflection film is composed of silicon nitride, silicon dioxide, or silicon oxide nitride.

[0029] With the above-stated construction, the antireflection film can be manufactured by a semiconductor process. Therefore, the manufacturing cost of the filter membrane can be reduced.

[0030] Also, the photoelectric conversion unit is formed in a part of a substrate; each of the plurality of pixels further includes a light shielding film that covers the substrate and has an opening provided in a position corresponding to the photoelectric conversion unit; and the filter membrane is provided between the light shielding film and the substrate.

[0031] With the above-stated construction, a light interference between the photoelectric conversion unit and the filter membrane can be prevented. This improves a sensitivity of the solid-state image sensor. Furthermore, the above-stated construction is effective as a method for preventing a color mixture. It is easy to form the filter membrane between the light shielding film and the photoelectric conversion unit because a physical thickness of the filter membrane is extremely thin.

[0032] Moreover, each of the plurality of pixels is provided so that a main surface of the filter membrane facing the photoelectric conversion unit is provided on a same plane; each of the plurality of pixels further includes a planarizing layer provided on a main surface of the filter membrane facing a light source; and the larger a physical thickness of the filter membrane is, the smaller a thickness of the planarizing layer is.

[0033] With the above-stated construction, a main surface of the planarizing layer facing the light source can be planarized among pixels. This can enhance scalability of a device.

[0034] Furthermore, each of the plurality of pixels further includes a microlens provided on a main surface of the planarizing layer facing the light source.

[0035] With the above-stated construction, light focus efficiency can be improved and the solid-state image sensor having a high sensitivity can be realized.

[0036] The above problem is also solved by a solid-state image sensor having a plurality of pixels, wherein each of the plurality of pixels includes a filter membrane for transmitting light of a predetermined color, and a photoelectric conversion unit for converting the light transmitted through the filter membrane into a charge; the filter membrane is a single layer film composed of an inorganic material; and an optical thickness of the single layer film is set according to which of a plurality of colors is to be transmitted in a range of 150 nm to 400 nm inclusive.

[0037] With the above-stated construction, the filter membrane is composed of an inorganic material. Therefore, the filter membrane has more excellent light resistance than a conventional filter membrane. Also, an optical thickness of the single layer film is in a range of 150 nm to 400 nm inclusive. This enables a local maximal value of a light transmittance to appear at a wavelength of a color to be transmitted in a transmission spectrum of the filter membrane. Therefore, an optical thickness of the filter membrane can be thinned to a thickness equivalent to one half of a wavelength of each color without degrading a color separation characteristic of the filter membrane.

[0038] The above problem is also solved by a solid-state image sensor having a plurality of pixels, wherein each of the plurality of pixels includes a filter membrane for transmitting light of a predetermined color, and a photoelectric conversion unit for converting the light transmitted through the filter membrane into a charge; the shorter a wavelength of the predetermined color is, the smaller a light absorption coefficient in an optical wavelength region of an inorganic material composing the filter membrane is.

[0039] With the above-stated construction, the filter membrane is composed of an inorganic material. Therefore, the filter membrane has more excellent light resistance than a conventional filter membrane.

[0040] Also, the light absorption coefficient of the filter membrane is different by varying a composition of the inorganic material.

[0041] With the above-stated construction, since a material of an inorganic material according to colors is same, there is no need to manage a material according to colors in a manufacturing process of the filter membrane. Also, the filter membrane can be manufactured more easily than a conventional filter membrane that needs an additional process for dispersing a pigment according to colors in a transparent resin because a composition of the filter membrane is varied according to colors in a forming step thereof. Therefore, the manufacturing cost of the filter membrane can be reduced.

[0042] Moreover, an optical thickness of the filter membrane is smaller than a thickness equivalent to one half of a wavelength of the predetermined color, by a thickness corresponding to an amount of the light of the predetermined color absorbed by the inorganic material.

[0043] With the above-stated construction, an optical thickness of the filter membrane is smaller than a thickness equivalent to one half of a wavelength of the predetermined color, by a thickness corresponding to an amount of the light of the predetermined color absorbed by the inorganic material. This enables a local maximal value of a light transmittance to appear at a wavelength of the predetermined color in a transmission spectrum of the filter membrane. Therefore, an optical thickness of the filter membrane can be thinned to a thickness equivalent to one half of a wavelength of each color without degrading a color separation characteristic of the filter membrane.

BRIEF DESCRIPTION OF THE DRAWINGS

[0044] FIG. **1** shows a construction of a camera system.

[0045] FIG. **2** is a cross section of a substrate showing a construction of pixels (**1***a*, **1***b*, and **1***c*) of a first embodiment.

[0046] FIG. **3** shows transmission spectra of filter membranes **21***a*, **21***b*, and **21***c* of the first embodiment.

[0047] FIG. **4** shows an internal construction of a signal processing circuit.

[0048] FIG. **5** is a determinant used for the signal processing circuit.

[0049] FIG. **6** shows color signal spectra generated by processing a digital signal.

[0050] FIG. **7** is a cross section of a substrate showing a construction of pixels (**1***a*, **1***b*, and **1***c*) of a second embodiment.

[0051] FIG. **8** shows transmission spectra of filter membranes **21***a*, **21***b*, and **21***c* of the second embodiment.

[0052] FIG. **9** is a cross section of a substrate showing a construction of pixels (**1***a*, **1***b*, and **1***c*) of a third embodiment.

[0053] FIG. **10** is a cross section of a process showing a manufacturing method of a filter membrane **21** of a fourth embodiment.

[0054] FIG. **11** is a cross section of the filter membrane **21** manufactured by the manufacturing method of the fourth embodiment.

[0055] FIG. **12** is a cross section of a process showing a manufacturing method of a filter membrane **21** of a fifth embodiment.

[0056] FIG. **13** is a cross section of the filter membrane **21** manufactured by the manufacturing method of the fifth embodiment.

[0057] FIG. **14** is a cross section of a substrate showing a construction of pixels (**1***a*, **1***b*, and **1***c*) of the fifth embodiment.

[0058] FIG. **15** shows transmission spectra of filter membranes **51***a*, **51***b*, and **51***c* of a sixth embodiment.

[0059] FIG. **16** is a cross section of a substrate showing a construction of pixels (**1***a*, **1***b*, and **1***c*) of a seventh embodiment.

[0060] FIG. **17** shows transmission spectra of filter membranes **61***a*, **61***b*, and **61***c* of the seventh embodiment.

[0061] FIG. **18** is a cross section of a substrate showing a construction of pixels (**1***a*, **1***b*, and **1***c*) of an eighth embodiment.

[0062] FIG. **19** shows transmission spectra of filter membranes **61***a*, **61***b*, and **61***c* of the eighth embodiment.

[0063] FIG. **20** is a cross section of a substrate showing a construction of pixels (**1***a*, **1***b*, and **1***c*) of a ninth embodiment.

[0064] FIG. **21** shows transmission spectra of filter membranes **71***a*, **71***b*, and **71***c* of the ninth embodiment.

[0065] FIG. **22** is a cross section of a process showing a manufacturing method of a filter membrane **61** of a tenth embodiment.

DESCRIPTION OF REFERENCE NUMERALS

[0066] **1**: solid-state image sensor
[0067] **2**: drive circuit
[0068] **3**: vertical scanning circuit
[0069] **4**: horizontal scanning circuit
[0070] **5**: analog front end
[0071] **6**: signal processing circuit
[0072] **7**: working memory
[0073] **8**: recording memory
[0074] **9**: control unit
[0075] **11**: substrate
[0076] **12**: photoelectric conversion unit forming layer
[0077] **13**: insulating layer
[0078] **14**: light shielding film forming layer
[0079] **15**: filter forming layer
[0080] **16**: P-type well
[0081] **17**: photoelectric conversion unit
[0082] **19**: light shielding film
[0083] **20**: opening
[0084] **21**, **51**, **61**, **71**: filter membrane
[0085] **22**: planarizing layer
[0086] **23**: microlens
[0087] **30**: antireflection film

BEST MODE FOR CARRYING OUT THE INVENTION

[0088] The following describes a solid-state image sensor according to embodiments of the present invention, with reference to the attached drawings. Note that the present invention is not limited to the following embodiments.

First Embodiment

[0089] FIG. **1** shows a construction of a camera system of the present invention.

[0090] The camera system is mounted on a digital camera, a digital video camera, and the like to generate image data, and includes a solid-state image sensor **1**, a drive circuit **2**, a vertical scanning circuit **3**, a horizontal scanning circuit **4**, an analog front end **5**, a signal processing circuit **6**, a working memory **7**, a recording memory **8**, and a control unit **9**.

[0091] The solid-state image sensor **1** is a MOS-type image sensor, and has a plurality of pixels (**1***a*, **1***b*, **1***c* and the like). Each of the plurality of pixels in FIG. **1** describes "R", "RG", or "RGB". "R" transmits light in a red region in an optical wavelength region, and shows a pixel having a local maximal

value in a light transmission spectrum in the red region. "RG" transmits light in red and green regions in an optical wavelength region, and shows a pixel having a local maximal value in a light transmission spectrum in the green region. "RGB" transmits light in red, green, and blue regions in an optical wavelength region, and shows a pixel having a local maximal value in a light transmission spectrum in the blue region.

[0092] For example, a pixel **1***a* has a sensitivity mainly to the red region, and outputs a signal corresponding to the amount of received light. A pixel **1***b* has a sensitivity mainly to the green and red regions, and outputs a signal corresponding to the amount of received light. A pixel **1***c* has a sensitivity mainly to the blue, green, and red regions, and outputs a signal corresponding to the amount of received light.

[0093] As shown in FIG. **1**, the arrangement of color filters conforms to the Bayer arrangement.

[0094] Note that in this description, a wavelength in the blue region is in a range of 400 nm to 490 nm inclusive, a wavelength in the green region is in a range of 490 nm to 580 nm inclusive, and a wavelength in the red region is in a range of 580 nm to 700 nm inclusive. Also, a wavelength region that is equal to or less than 400 nm is an ultraviolet region, and a wavelength region that is equal to or larger than 700 nm is an infrared region.

[0095] The drive circuit **2** drives the vertical scanning circuit **3** and the horizontal scanning circuit **4** based on a trigger signal from the control unit **9**.

[0096] The vertical scanning circuit **3** activates each of the plurality of pixels of the solid-state image sensor **1** line by line in sequence by a driving instruction from the drive circuit **2**, and simultaneously transfers the activated pixel signals of one line to the horizontal scanning circuit **4**.

[0097] The horizontal scanning circuit **4** operates in synchronization with the vertical scanning circuit **3** by a driving instruction from the drive circuit **2**, and outputs the transferred pixel signals of one line to the analog front end **5** column by column in sequence. The signal of each of the plurality of pixels arranged in a matrix in a plane is transformed into voltage by the drive circuit **2**, the vertical scanning circuit **3**, and the horizontal scanning circuit **4** to serially output to the analog front end **5**.

[0098] The analog front end **5** samples and amplifies the voltage signal, and transforms the voltage signal from an analog signal to a digital signal to output to the signal processing circuit **6**.

[0099] The signal processing circuit **6** is a DSP (Digital Signal Processor), and transforms the digital signal from the analog front end **5** into a red signal, a green signal, and a blue signal to generate image data.

[0100] Specifically, the working memory **7** is a SDRAM that is used when the signal processing circuit **6** transforms a digital signal corresponding to each of the plurality of pixels into a color signal of each of the colors.

[0101] The recording memory **8** is a SDRAM that records the image data generated by the signal processing circuit **6**.

[0102] The control unit **9** controls the drive circuit **2** and the signal processing circuit **6**. For example, when a user pushes a shutter button, the control unit **9** outputs a trigger signal to the drive circuit **2**.

[0103] The following describes a construction of each of the plurality of pixels (**1***a*, **1***b*, and **1***c*) of the solid-state image sensor **1**.

[0104] FIG. **2** is a cross section of a substrate showing a construction of pixels (**1***a*, **1***b*, and **1***c*) of the first embodiment.

[0105] Each of the pixels is composed of each of the following layers based on a substrate **11** that is composed of silicon to which a N-type impurity is added.

[0106] A photoelectric conversion unit forming layer **12** includes a P-type well **16** and a photoelectric conversion unit **17**. The P-type well **16** is formed by an ion implantation of a P-type impurity in the substrate **11**. The photoelectric conversion unit **17** as a N-type region is formed by an ion implantation of a N-type impurity in the P-type well **16**.

[0107] An insulating layer **13** is composed of silicon dioxide **18**, and provided for insulating the photoelectric conversion unit forming layer **12** from a light shielding film forming layer **14**, and planarizing the image sensor.

[0108] The light shielding film forming layer **14** includes a wiring from the vertical scanning circuit **3** and a wiring that transfers a signal charge to the horizontal scanning circuit **4**, and the wirings are formed by a CVD method. A light shielding film **19** is also formed by the CVD method, and the silicon dioxide **18** is formed in order to planarize the image sensor.

[0109] A filter forming layer **15** includes each of filter membranes (**21***a*, **21***b*, and **21***c*) and a planarizing layer **22** composed of silicon dioxide. The larger a physical thickness of each of the filter membranes (**21***a*, **21***b*, and **21***c*) (da, db, and dc) is, the smaller a thickness of the planarizing layer **22** is.

[0110] Incident light **24** is entered from an upper part of the pixel, concentrated by a microlens **23**, and reached to the photoelectric conversion unit **17** through each of the filter membranes (**21***a*, **21***b*, and **21***c*) and an opening **20** that is formed in the light shielding film **19**.

[0111] In the incident light **24** entered into the pixel **1***a*, light whose wavelength region has a local maximal value in a red region is reached to the photoelectric conversion unit **17** through the filter membrane **21***a*. In the incident light **24** entered into the pixel **1***b*, light whose wavelength region has a local maximal value in a green region is reached to the photoelectric conversion unit **17**. In the incident light **24** entered into the pixel **1***c*, light whose wavelength region has a local maximal value in a blue region is reached to the photoelectric conversion unit **17**.

[0112] The incident light **24** transmitted through each of the filter membranes (**21***a*, **21***b*, and **21***c*) is passed through the opening **20** that is formed in the light shielding film **19**.

[0113] The light shielding film **19** is formed by the CVD method and the like. In order to prevent scattered light from an adjacent pixel from reaching the photoelectric conversion unit **17**, a portion right above the photoelectric conversion unit **17** is opened by providing the opening **20**, and the light shielding film **19** shields light from a rest portion other than the opening **20**. With this construction, only incident light that is near-vertical to the substrate **11** can be reached to the photoelectric conversion unit **17**, and oblique light is shielded.

[0114] The photoelectric conversion unit **17** forms a photodiode by a PN junction with the P-type well **16**, and generates a signal charge according to brightness of light that is reached to the photoelectric conversion unit **17** through each of the filter membranes (**21***a*, **21***b*, and **21***c*) and the opening **20**. A structure of the photoelectric conversion is as follows.

[0115] In the photoelectric conversion unit **17**, a depletion region is formed in which an electron as a carrier is combined

with an electron hole as a P-type well carrier and disappears. This relatively increases an electric potential of the photoelectric conversion unit **17**, and relatively decreases an electric potential of the P-type well **16**. Therefore, an internal electric field occurs in the depletion region.

[0116] In this state, when the incident light **24** is reached to the photoelectric conversion unit **17**, an electron-hole pair is generated by the photoelectric conversion, and the electron and the electron hole drift in an opposite direction by the internal electric field. In other words, the electron drifts toward a center of the photoelectric conversion unit **17**, and the electron hole drifts toward the P-type well. As a result, the electron is accumulated in the photoelectric conversion unit **17**, and the accumulated electron becomes a signal charge of each of the pixels.

[0117] Then, the pixel **1***a* generates a signal charge according to brightness of light in the incident light **24** whose wavelength region has a local maximal value in a red region. The pixel **1***b* generates a signal charge according to brightness of light whose wavelength region has a local maximal value in a green region. The pixel **1***c* generates a signal charge according to brightness of light whose wavelength region has a local maximal value in a blue region.

[0118] In the first embodiment, each of filter membranes (**21***a*, **21***b*, and **21***c*) is a single layer film composed of amorphous silicon. An optical thickness of each of the filter membranes (**21***a*, **21***b*, and **21***c*) is smaller than a thickness equivalent to one half of a wavelength of a color to be transmitted, by a thickness corresponding to an amount of light of the color to be transmitted absorbed by amorphous silicon. The color to be transmitted is each of the colors red (R), green (G), and blue (B).

[0119] Only considering an interference effect of light in a filter membrane, a local maximal value of a transmittance appears at a wavelength λ corresponding to a thickness that is twice as thick as an optical thickness nd of the filter membrane in a light transmission spectrum. In other words, if the optical thickness nd of the filter membrane is equal to one half of a wavelength of a color to be transmitted, a local maximal value of a transmittance appears at the wavelength according to a relational expression $nd=\lambda/2$.

[0120] Because light is actually absorbed in a filter membrane, not only the interference effect of light but also an absorption effect are required to be considered. With regard to an absorption coefficient of a general inorganic material, the shorter a light wavelength is, the larger the absorption coefficient is. In other words, as the light wavelength becomes shorter, a transmittance decreases because light is absorbed. As a result, a wavelength indicating a local maximal value of a light transmittance shifts to a long-wavelength side. Therefore, by adjusting an optical thickness of each of the filter membranes to be smaller than a thickness equivalent to one half of a wavelength of a color to be transmitted, by a thickness corresponding to an amount of light of the color to be transmitted absorbed by amorphous silicon, it is possible that a local maximal value of a light transmittance appears at a wavelength of a color to be transmitted.

[0121] Here, a wavelength λ of red is 650 nm, a wavelength λ of green is 560 nm, and a wavelength λ of blue is 490 nm. Therefore, one half of the wavelength λ of red is 325 nm, one half of the wavelength λ of green is 280 nm, and one half of the wavelength λ of blue is 245 nm. Since an optical thickness is smaller than a thickness equivalent to one half of a wavelength of a color to be transmitted, by a thickness corresponding to an amount of light of the color to be transmitted absorbed by amorphous silicon, an optical thickness of the red filter membrane is 315 nm, an optical thickness of the green filter membrane is 260 nm, and an optical thickness of the blue filter membrane is 200 nm. A light absorbed amount is obtained by an absorption coefficient of amorphous silicon and an optical thickness of a filter membrane.

[0122] A refractive index of amorphous silicon at a wavelength of 650 nm is 4.5. A refractive index of amorphous silicon at a wavelength of 560 nm is 4.75. A refractive index of amorphous silicon at a wavelength of 490 nm is 5.0. Therefore, the physical thicknesses (da, db, and dc) of each of the filter membranes (**21***a*, **21***b*, and **21***c*) are da=70 nm, db=55 nm, and dc=40 nm respectively.

[0123] FIG. **3** shows transmission spectra of the filter membranes **21***a*, **21***b*, and **21***c* of the first embodiment.

[0124] A curved line **31***a* shows a transmission spectrum of the filter membrane **21***a*. A curved line **31***b* shows a transmission spectrum of the filter membrane **21***b*. A curved line **31***c* shows a transmission spectrum of the filter membrane **21***c*.

[0125] The filter membrane **21***a* has a local maximal value of a light transmittance at the red wavelength of 650 nm. The filter membrane **21***b* has a local maximal value of a light transmittance at the green wavelength of 560 nm. The filter membrane **21***c* has a local maximal value of a light transmittance at the blue wavelength of 490 nm. The larger an optical thickness of a filter membrane is, the longer a wavelength at which a light transmittance is a local maximal value is. For this reason, it can be expected that a local maximal value appears in a light transmission spectrum because of an interference effect of light.

[0126] A local maximal value of a transmittance of the filter membrane **21***a* is 78%. A local maximal value of a transmittance of the filter membrane **21***b* is 61%. A local maximal value of a transmittance of the filter membrane **21***c* is 38%. It can be expected that the shorter a color wavelength is, the smaller the local maximal value is because the shorter the color wavelength is, the larger an absorption coefficient of amorphous silicon is.

[0127] Also, when focusing attention on a transmission spectrum of one filter membrane (for example, the filter membrane **21***b*: the curved line **31***b*), a slope of a short-wavelength side curved line (**31***d*) of the wavelength at which a light transmittance is a local maximal value (560 nm) is larger than a slope of a long-wavelength side curved line (**31***e*). Because the shorter a light wavelength is, the larger an absorption coefficient of amorphous silicon is, a transmittance of the short-wavelength side decreases. This absorption effect improves a color separation characteristic because light of the short-wavelength side is easily cut.

[0128] As shown in FIG. **3**, any filter membrane transmits light in an entire visible wavelength region (400 nm to 700 nm). As a result, for example, each of components of color signals (R, G, and B) is included in a signal obtained from the pixel **1***a* having the filter membrane **21***a* based on a ratio of the transmission spectrum **31***a*. Also, same applies to the pixels **1***b* and **1***c*.

[0129] Therefore, in order to derive the color signals (R, G, and B) for generating image data, a process has to be performed on digital signals (Sa, Sb, and Sc) obtained from the pixels **1***a*, **1***b*, and **1***c*. The following describes a method thereof.

[0130] FIG. **4** shows an internal construction of a signal processing circuit.

[0131] A signal processing circuit **6** includes a transformation matrix retentive unit **61**, an operation unit **62**, and a memory control unit **63**.

[0132] The transformation matrix retentive unit **61** retains a transformation matrix that transforms the digital signals (Sa, Sb, and Sc) generated in the analog front end **5** into the color signals (R, G, and B).

[0133] There is a relation between the digital signals (Sa, Sb, and Sc) and the color signals (R, G, and B) as shown in FIG. **5**A.

[0134] Here, each of elements in the matrix W_{11} to W_{33} is a weighting factor based on the transmission spectrum of each of the filter membranes **21***a*, **21***b*, and **21***c*.

[0135] Each of the elements in the matrix W_{11} to W_{33} is inversely transformed into the transformation matrix. There is a relation between the digital signals (Sa, Sb, and Sc) and the color signals (R, G, and B) as shown in FIG. **5**B.

[0136] Here, each of elements in the transformation matrix X_{11} to X_{33} is obtained by inversely transforming the matrix in FIG. **5**A.

[0137] The memory control unit **63** controls the access to the working memory **7** and the recording memory **8**. The memory control unit **63** receives the digital signal from the analog front end **5**, and stores the digital signal in the working memory **7** once. When image data corresponding to one frame is accumulated in the working memory **7**, the memory control unit **63** obtains a portion of the image data from the working memory **7**, and inputs the portion of the image data to the operation unit **62**.

[0138] The operation unit **62** obtains the color signals (R, G, and B) by multiplying the digital signals (Sa, Sb, and Sc) by the transformation matrix retained in the transformation matrix retentive unit **61**.

[0139] The memory control unit **63** stores the color signals (R, G, and B) obtained by the operation unit **62** in the recording memory **8**. As a result, the image data corresponding to one frame is recorded in the recording memory **8**.

[0140] FIG. **6** shows color signal spectra generated by processing a digital signal.

[0141] Each of parameters is determined in order to get close to the ideal spectroscopy of a NTSC.

[0142] As described above, in the first embodiment, an optical thickness of each of the filter membranes is properly adjusted according to a color to be transmitted. With this construction, the transmission spectra shown in FIG. **3** can be obtained and each of the filter membranes functions as a color filter.

[0143] Since each of the filter membranes (**21***a*, **21***b*, and **21***c*) is composed of a same material (amorphous silicon), there is no need to manage a material according to colors in a manufacturing process of the filter membrane. Therefore, the manufacturing cost of the filter membrane can be reduced.

[0144] Each of the filter membranes (**21***a*, **21***b*, and **21***c*) can be manufactured by a semiconductor process. If the semiconductor process can be used, there is no need to provide a manufacturing line of a color filter exclusively for an organic material. Therefore, the manufacturing cost of a filter membrane can be reduced.

[0145] In recent years, there is a request for thinning a color filter to prevent a color mixture among pixels. The color mixture is caused when oblique incident light entering in a color filter of a pixel is reached to a photoelectric conversion unit of an adjacent pixel to the pixel. By thinning a filter membrane, a color mixture can be prevented. In the first embodiment, a physical, thickness of each of the filter membranes (**21***a*, **21***b*, and **21***c*) is extremely thin and is 70 nm at a maximum. Therefore, a color mixture is effectively prevented.

[0146] A refractive index of amorphous silicon is about 5 that is larger than a normal insulating film and the like (for example, a refractive index of silicon dioxide is 1.46). Therefore, even if oblique incident light enters in a filter membrane, a refracting angle is small and a color mixture among pixels can be prevented.

[0147] Also, with regard to amorphous silicon, a film can be formed at a low temperature. Therefore, a filter membrane can be formed after a light shielding film such as low-melting aluminum is formed. As a result, a manufacturing procedure can be changed freely. Moreover, if amorphous silicon is used, a stress on a photoelectric conversion unit can be reduced. Therefore, the damage to the photoelectric conversion unit can be reduced.

[0148] With regard to a general interference filter, if a light incident angle changes, an interfering wavelength shifts to a short-wavelength side because a light path length becomes shorter. Therefore, it has been a problem to use the general interference filter for a solid-state image sensor because each of vertical incident light and oblique incident light has a different color separation characteristic. When light enters at an angle of 30 degrees, a refractive angle of amorphous silicon is 5.7 degrees because a refractive index of amorphous silicon is about 5 and large. Therefore, there is little influence by oblique incident light. With regard to a general interference filter, the larger a film thickness is, the greater an influence by oblique incident light is. However, a film thickness of each of the filter membranes of the first embodiment is not larger than 100 nm. As a result, there is little influence by oblique incident light.

[0149] Note that amorphous silicon used for each of the filter membranes (**21***a*, **21***b*, and **21***c*) is an absorbent material. In this description, the absorbent material is defined as a material having a wavelength whose extinction coefficient is equal to or larger than 0.1 in a range of a wavelength of 400 nm to 700 nm inclusive. There is a relation among an absorption coefficient α, an extinction coefficient k, and a wavelength λ that $k=\alpha\times\lambda/4\pi$.

Second Embodiment

[0150] In a second embodiment, an example that an antireflection film **30** is formed on a main surface of each of the filter membranes (**21***a*, **21***b*, and **21***c*) facing a light source is described. Since other constructions except for the antireflection film **30** are same as the first embodiment, an explanation thereof is omitted.

[0151] FIG. **7** is a cross section of a substrate showing a construction of pixels (**1***a*, **1***b*, and **1***c*) of the second embodiment.

[0152] The antireflection film **30** is formed on the main surface of each of the filter membranes (**21***a*, **21***b*, and **21***c*) facing the light source. The antireflection film **30** is composed of silicon nitride and a physical thickness thereof is 50 nm.

[0153] Note that physical thicknesses of each of the filter membranes **21***a*, **21***b*, and **21***c* are same as the first embodiment, and are 70 nm, 55 nm, and 40 nm respectively.

[0154] FIG. **8** shows transmission spectra of the filter membranes **21***a*, **21***b*, and **21***c* of the second embodiment.

[0155] A curved line **32***a* shows a transmission spectrum of the filter membrane **21***a*. A curved line **32***b* shows a transmis-

sion spectrum of the filter membrane **21***b*. A curved line **32***c* shows a transmission spectrum of the filter membrane **21***c*.

[0156] The filter membrane **21***a* has a local maximal value of a light transmittance at a red wavelength of 650 nm. The filter membrane **21***b* has a local maximal value of a light transmittance at a green wavelength of 560 nm. The filter membrane **21***c* has a local maximal value of a light transmittance at a blue wavelength of 490 nm.

[0157] Compared the first embodiment with the second embodiment regarding a transmission spectrum of a same filter membrane (for example, the filter membrane **21***b*: the curved lines **31***b* and **32***b*), a local maximal value (65%) of a transmittance of the second embodiment is larger than the local maximal value (61%) of a transmittance of the first embodiment. This is because a light reflectance decreases by providing the antireflection film **30**.

[0158] The following describes a material and a refractive index of each part in which the incident light **24** enters. Note that the refractive index indicates a value when a wavelength of the incident light is 560 nm.

[0159] Opening **20**: silicon dioxide, a refractive index: 1.46

[0160] Filter membrane **21**: amorphous silicon, a refractive index: 4.77

[0161] Insulating layer **13**: silicon dioxide, a refractive index: 1.46

[0162] Photoelectric conversion unit **17**: N-type silicon, a refractive index: 4

[0163] The incident light **24** is concentrated by the microlens **23**, and reached to the photoelectric conversion unit **17** through the opening **20** and each of the filter membranes (**21***a*, **21***b*, and **21***c*). Generally, when light enters in one medium to another medium, a reflectance is determined by a ratio of refractive indexes of the two media. The following describes a reflectance R when light enters from a medium having a refractive index n**1** to a medium having a refractive index n**2**.

$$R=((n1-n2)/(n1+n2))^2$$

[0164] When light enters from silicon dioxide (a refractive index: 1.46) that is generally used as a planarizing layer to amorphous silicon (a refractive index: 4.77), a reflectance is 28%. On the other hand, when light enters from silicon nitride (a refractive index: 2.00) to amorphous silicon (a refractive index: 4.77), a reflectance is 17%. In other words, since a reflectance decreases by 10%, a transmittance increases. As a result, a light amount that enters in the photoelectric conversion unit **17** in each of the pixels increases, and a sensitivity of the solid-state image sensor **1** is improved. This is effective as a method for preventing a sensitivity from decreasing because of the miniaturization of pixels.

[0165] By forming silicon nitride on amorphous silicon as each of the filter membranes (**21***a*, **21***b*, and **21***c*), there are effects of not only improving a sensitivity but also increasing the reliability and the humidity resistance of the solid-state image sensor **1**.

Third Embodiment

[0166] In a third embodiment, an example that each of the filter membranes (**21***a*, **21***b*, and **21***c*) is formed between the photoelectric conversion unit **17** and the light shielding film **19** is described. Since other constructions are same as the first embodiment, an explanation thereof is omitted.

[0167] FIG. **9** is a cross section of a substrate showing a construction of pixels (**1***a*, **1***b*, and **1***c*) of the third embodiment.

[0168] Each of the filter membranes (**21***a*, **21***b*, and **21***c*) is formed between the photoelectric conversion unit **17** and the light shielding film **19**. Note that physical thicknesses of each of the filter membranes (**21***a*, **21***b*, and **21***c*) are same as the first embodiment, and are 70 nm, 55 nm, and 40 nm respectively.

[0169] The filter forming layer **15** includes each of the filter membranes (**21***a*, **21***b*, and **21***c*), and can be formed by a normal semiconductor process. Therefore, the filter forming layer **15** can be formed between the photoelectric conversion unit forming layer **12** and the light shielding film forming layer **14**.

[0170] Moreover, because the filter forming layer **15** can be formed before a wiring process, polysilicon that is required to be processed at a high temperature can be used.

[0171] Since each of the filter membranes (**21***a*, **21***b*, and **21***c*) is composed of amorphous silicon, there is the possibility that a signal charge generated in the photoelectric conversion unit **17** leaks into each of the filter membranes (**21***a*, **21***b*, and **21***c*) unless the filter membrane **21** is insulated from the photoelectric conversion unit forming layer **12**. Therefore, the insulating layer **13** is provided between each of the filter **25**, membranes (**21***a*, **21***b*, and **21***c*) and the photoelectric conversion unit forming layer **12**.

[0172] As described above, in addition to the effect of the pixels of the first embodiment, in the pixels of the third embodiment, a light interference between the photoelectric conversion unit **17** and each of the filter membranes (**21***a*, **21***b*, and **21***c*) can be prevented because each of the filter membranes (**21***a*, **21***b*, and **21***c*) is formed between the photoelectric conversion unit **17** and the light shielding film **19**. This improves a sensitivity of the solid-state image sensor **1**.

[0173] Furthermore, the above-mentioned construction is effective as a method for preventing a color mixture because of the miniaturization of pixels.

Fourth Embodiment

[0174] In a fourth embodiment, a manufacturing method of each of the filter membranes (**21***a*, **21***b*, and **21***c*) will be described.

[0175] FIG. **10** is a cross section of a process showing a manufacturing method of each of the filter membranes (**21***a*, **21***b*, and **21***c*) of the fourth embodiment.

[0176] FIG. **10** (*a*) shows a pixel after a film formation process.

[0177] In the film formation process, an amorphous silicon film **201** is formed in a whole upper part of a silicon oxide film of the light shielding film forming layer **14**. With regard to amorphous silicon, when a film is formed, a PVD (Physical Vapor Deposition) method is used. A temperature of forming a film is set in a range of an ambient temperature to 400° C. inclusive. When a thickness of the amorphous silicon film **201** is 70 nm, the film formation is stopped.

[0178] FIG. **10** (*b*) shows a pixel after a first application process.

[0179] In the first application process, photoresist (PR) **202** is applied on a whole upper part of the amorphous silicon film **201** that is formed in the film formation process.

[0180] FIG. **10** (*c*) shows a pixel after a first exposure and development process.

[0181] In the first exposure and development process, the photoresist (PR) **202** that is applied in the first application process is exposed with a certain pattern mask. Then, the exposed portion is removed and photoresist in a rest portion is

cured. With this construction, only the photoresist **202** corresponding to the pixel **1***c* can be removed.

[0182] FIG. **10** (*d*) shows a pixel after a first etching process.

[0183] In the first etching process, dry etching is performed on the amorphous silicon film **201** after the first exposure and development process. As a result, the amorphous silicon film **201** of an area corresponding to the pixel **1***c* is etched. When a thickness of the amorphous silicon film **201** of the pixel **1***c* is 40 nm, the etching is stopped.

[0184] Note that a film thickness can be controlled by the dry etching with an accuracy of 3%.

[0185] FIG. **10** (*e*) shows a pixel after a second application process.

[0186] In the second application process, photoresist (PR) **203** is applied in a whole upper part of the amorphous silicon film **201** on which etching is performed.

[0187] FIG. **10** (*f*) shows a pixel after a second exposure and development process.

[0188] In the second exposure and development process, only the photoresist **202** corresponding to the pixel **1***b* can be removed.

[0189] FIG. **10** (*g*) shows a pixel after a second etching process.

[0190] In the second etching process, the amorphous silicon film **201** of an area corresponding to the pixel **1***b* is etched. When a thickness of the amorphous silicon film **201** of the pixel **1***b* is 55 nm, the etching is stopped.

[0191] FIG. **10** (*h*) shows a pixel after a photoresist removing process.

[0192] In the photoresist removing process, unnecessary photoresist **203** is removed.

[0193] As described above, since each of the filter membranes is composed of a same material (amorphous silicon), there is no need to manage a material according to colors in a manufacturing process of the filter membrane. Therefore, the manufacturing cost of the filter membrane can be reduced.

[0194] Each of the filter membranes is manufactured by a semiconductor process. Therefore, the manufacturing cost of the filter membrane can be reduced.

[0195] In the fourth embodiment, a temperature of forming a film is set in a range of an ambient temperature to 400° C. inclusive. Also, with regard to amorphous silicon, a film can be formed at a low temperature. Therefore, a filter membrane can be formed after a light shielding film such as low-melting aluminum is formed.

[0196] FIG. **11** is a cross section of each of the filter membranes (**21***a*, **21***b*, and **21***c*) manufactured by the manufacturing method of the fourth embodiment.

[0197] By using the above-mentioned manufacturing method, there is the possibility that an oxide film **211** such as a natural oxide film having a thickness of equal to or less than 10 nm is formed on the amorphous silicon film **201**. However, because a thickness of the oxide film **211** is equal to or less than 10 nm and extremely thin, the oxide film **211** has little influence on a transmission spectrum. By designing a device in view of a thickness of an oxide film, an excellent color separation characteristic can be obtained.

Fifth Embodiment

[0198] In a fifth embodiment, a manufacturing method of each of the filter membranes (**21***a*, **21***b*, and **21***c*) will be described.

[0199] FIG. **12** is a cross section of a process showing a manufacturing method of each of the filter membranes (**21***a*, **21***b*, and **21***c*) of the fifth embodiment.

[0200] FIG. **12** (*a*) shows a pixel after a first film formation process.

[0201] In the first film formation process, an amorphous silicon film **301** is formed in a whole upper part of an oxide silicon film of the light shielding film forming layer **14**. With regard to amorphous silicon, when a film is formed, a PVD (Physical Vapor Deposition) method is used. A temperature of forming a film is set in a range of an ambient temperature to 400° C. inclusive. When a thickness of the amorphous silicon film **301** is 15 nm, the film formation is stopped.

[0202] FIG. **12** (*b*) shows a pixel after a first exposure and development process.

[0203] In the first exposure and development process, photoresist (PR) **302** is applied on a whole upper part of the amorphous silicon film **301** that is formed in the first film formation process. Then, the photoresist **302** is exposed using a stepper to remove the photoresist **302** corresponding to the pixels **1***b* and **1***c*.

[0204] FIG. **12** (*c*) shows a pixel after a first etching process.

[0205] In the first etching process, dry etching is performed on the amorphous silicon film **301** after the first exposure and development process. As a result, the amorphous silicon film **301** of areas corresponding to the pixels **1***b* and **1***c* are removed.

[0206] FIG. **12** (*d*) shows a pixel after a first photoresist removing process.

[0207] In the first photoresist removing process, unnecessary photoresist **302** is removed. With this construction, the amorphous silicon film **301** having a thickness of 15 nm is formed in an area corresponding to the pixel **1***a*.

[0208] FIG. **12** (*e*) shows a pixel after a second film formation process.

[0209] In the second film formation process, an amorphous silicon film **303** is formed after the first photoresist removing process. When a thickness of the amorphous silicon film **303** is 15 nm, the film formation is stopped. As a result, a thickness of the amorphous silicon film **303** of each of the pixels **1***a*, **1***b*, and **1***c* is 30 nm, 15 nm, and 15 nm respectively.

[0210] FIG. **12** (*f*) shows a pixel after a second exposure and development process.

[0211] In the second exposure and development process, photoresist (PR) **304** is applied on a whole upper part of the amorphous silicon film **303** that is formed in the second film formation process. Then, the photoresist **304** is exposed using a stepper to remove the photoresist **304** corresponding to the pixel **1***c*.

[0212] FIG. **12** (*g*) shows a pixel after a second etching process.

[0213] In the second etching process, the amorphous silicon film **303** of an area corresponding to the pixel **1***c* is removed.

[0214] FIG. **12** (*h*) shows a pixel after a second photoresist removing process.

[0215] In the second photoresist removing process, an amorphous silicon film having a thickness of 30 nm is formed in an area corresponding to the pixel **1***a*, and an amorphous silicon film having a thickness of 15 nm is formed in an area corresponding to the pixel **1***b*.

[0216] FIG. **12** (*i*) shows a pixel after a third film formation process.

[0217] In the third film formation process, an amorphous silicon film having a thickness of 40 nm is formed. Therefore, a thickness of each of the filter membranes (**21***a*, **21***b*, and **21***c*) in each of the pixels **1***a*, **1***b*, and **1***c* is 70 nm, 55 nm, and 40 nm respectively.

[0218] In this state, the filter membranes (**21***a*, **21***b*, and **21***c*) having three types of film thickness i.e. 70 nm, 55 nm, and 40 nm are formed. In other words, an amorphous silicon film having a thickness of 70 nm is formed in an area corresponding to the pixel **1***a*, an amorphous silicon film having a thickness of 55 nm is formed in an area corresponding to the pixel **1***b*, and an amorphous silicon film having a thickness of 40 nm is formed in an area corresponding to the pixel **1***c*.

[0219] As described above, since each of the filter membranes is composed of a same material (amorphous silicon), there is no need to manage a material according to colors in a manufacturing process of the filter membrane. Therefore, the manufacturing cost of the filter membrane can be reduced.

[0220] Each of the filter membranes is manufactured by a semiconductor process. Therefore, the manufacturing cost of the filter membrane can be reduced.

[0221] In the fifth embodiment, since a film thickness is controlled in the film formation process, an in-plane variation of the film thickness can be reduced compared to the method of controlling a film thickness by etching described in the fourth embodiment. As a result, the accuracy of a film thickness can be increased.

[0222] In the fifth embodiment, a temperature of forming a film is set in a range of an ambient temperature to 400° C. inclusive. Also, with regard to amorphous silicon, a film can be formed at a low temperature. Therefore, a filter membrane can be formed after a light shielding film such as low-melting aluminum is formed.

[0223] FIG. **13** is a cross section of each of the filter membranes (**21***a*, **21***b*, and **21***c*) manufactured by the manufacturing method of the fifth embodiment.

[0224] By using the above-mentioned manufacturing method, there is the possibility that the oxide film **211** such as a natural oxide film is formed on the amorphous silicon films **301**, **303**, and **305**. However, because a thickness of the oxide film **211** is equal to or less than 10 nm and extremely thin, the oxide film **211** has little influence on a transmission spectrum. By designing a device in view of a thickness of an oxide film, an excellent color separation characteristic can be obtained.

[0225] Note that in the fifth embodiment, the filter membranes are completed in a stage of FIG. **12** (*i*). However, the filter membranes may be completed in a stage of FIG. **12** (*h*).

[0226] In the filter membranes of FIG. **12** (*h*), three types of the film thicknesses are 30 nm, 15 nm, and 0 nm respectively. With this construction, there are different transmission bands of two colors (30 nm and 15 nm) in the pixels **1***a* and **1***b*, and a white color (0 nm) in the pixel **1***c*, and a color filter can be realized. With regard to the color filter, a thickness of amorphous silicon is about 30 nm and very thin, so there is less absorption of light and more transmission light amount. Therefore, a solid-state image sensor having a high sensitivity can be obtained.

[0227] On the other hand, in the construction of FIG. **12** (*i*), color separation is performed by an interference effect and an absorption effect. Compared to the construction of FIG. **12** (*h*), a transmitted light amount decreases because of the absorption by amorphous silicon. However, a solid-state image sensor having the color reproducibility can be obtained.

[0228] In both of FIG. **12** (*h*) and FIG. **12** (*i*), three different transmission bands can be obtained, and color separation can be realized. Since there is more transmitted light amount in FIG. **12** (*h*), a color filter shown in FIG. **12** (*h*) can be applied to a field that emphasizes the high sensitivity. Also, a color filter shown in FIG. **12** (*i*) can be applied to a field that emphasizes the color reproducibility.

Sixth Embodiment

[0229] In a sixth embodiment, an example that each of filter membranes (**51***a*, **51***b*, and **51***c*) is composed of titanium dioxide is described. Since other constructions are same as the first embodiment, an explanation thereof is omitted.

[0230] FIG. **14** is a cross section of a substrate showing a construction of pixels (**1***a*, **1***b*, and **1***c*) of the sixth embodiment.

[0231] In the sixth embodiment, each of the filter membranes (**51***a*, **51***b*, and **51***c*) is a single layer film composed of titanium dioxide. An optical thickness of each of the filter membranes is smaller than a thickness equivalent to one half of a wavelength of a color to be transmitted, by a thickness corresponding to an amount of light of the color to be transmitted absorbed by titanium dioxide.

[0232] As mentioned in the first embodiment, with this construction, it is possible that a local maximal value of a light transmittance appears at a wavelength of a color to be transmitted.

[0233] Titanium dioxide is different from amorphous silicon in that there is little absorption in an optical wavelength region (400 nm to 700 nm), and an extinction coefficient is nearly 0. Therefore, a correction according to a light absorption amount is nearly 0.

[0234] Here, a wavelength λ of red is 630 nm, a wavelength λ of green is 530 nm, and a wavelength λ of blue is 470 nm. Therefore, one half of the wavelength λ of red is 315 nm, one half of the wavelength λ of green is 265 nm, and one half of the wavelength λ of blue is 235 nm. Because a correction according to a light absorption amount is nearly 0, an optical thickness of the red filter membrane is 315 nm, an optical thickness of the green filter membrane is 265 nm, and an optical thickness of the blue filter membrane is 235 nm.

[0235] A refractive index of titanium dioxide at a wavelength of 630 nm is 2.46. A refractive index of amorphous silicon at a wavelength of 530 nm is 2.53. A refractive index of amorphous silicon at a wavelength of 470 nm is 2.60. Therefore, physical thicknesses (da, db, and dc) of each of the filter membrane (**51***a*, **51***b*, and **51***c*) are da=125 nm, db=105 nm, and dc=90 nm respectively.

[0236] FIG. **15** shows transmission spectra of the filter membranes **51***a*, **51***b*, and **51***c* of the sixth embodiment.

[0237] A curved line **33***a* shows a transmission spectrum of the filter membrane **51***a*. A curved line **33***b* shows a transmission spectrum of the filter membrane **51***b*. A curved line **33***c* shows a transmission spectrum of the filter membrane **51***c*.

[0238] The filter membrane **51***a* has a local maximal value of a light transmittance at the red wavelength of 630 nm. The filter membrane **51***b* has a local maximal value of a light transmittance at the green wavelength of 530 nm. The filter membrane **51***c* has a local maximal value of a light transmittance at the blue wavelength of 470 nm. The larger an optical thickness of a filter membrane is, the longer a wavelength at which a light transmittance is a local maximal value is. For

this reason, it can be expected that a local maximal value appears in a light transmission spectrum because of an interference effect of light.

[0239] A local maximal value of a transmittance of the filter membrane **51***a* is 96%. A local maximal value of a transmittance of the filter membrane **51***b* is 96%. A local maximal value of a transmittance of the filter membrane **51***c* is 96%. It can be expected that the local values are constant regardless of the color wavelength because an absorption coefficient of titanium dioxide is constant regardless of the wavelength.

[0240] Compared the first embodiment with the sixth embodiment regarding a transmission spectrum of the same filter membrane, the transmittance of the sixth embodiment is larger than the transmittance of the first embodiment. This is because an absorption coefficient of titanium dioxide is nearly 0 in an optical wavelength region.

[0241] Because there is little absorption in an optical wavelength region with regard to titanium dioxide, a high transmittance can be obtained on a short-wavelength side on which a transmittance in amorphous silicon decreases. As a result, a sensitivity of a solid-state image sensor can be improved.

[0242] As described above, in the sixth embodiment, each of the filter membrane (**51***a*, **51***b*, and **51***c*) is composed of titanium dioxide as a transparent material. Therefore, a sensitivity of a solid-state image sensor can be improved. Also, other effects are same as the first embodiment. In this description, the transparent material is defined as a material having a wavelength whose extinction coefficient is equal to or less than 0.05 in a range of a wavelength of 400 nm to 700 nm inclusive.

Seventh Embodiment

[0243] In a seventh embodiment, an example that each of filter membranes (**61***a*, **61***b*, and **61***c*) is composed of an oxide of amorphous silicon is described. Since other constructions are same as the first embodiment, an explanation thereof is omitted.

[0244] FIG. **16** is a cross section of a substrate showing a construction of pixels (**1***a*, **1***b*, and **1***c*) of the seventh embodiment.

[0245] The seventh embodiment is different from the first embodiment in that each of the filter membranes (**61***a*, **61***b*, and **61***c*) is composed of an oxide of amorphous silicon SiO_x. In addition, the seventh embodiment is different from the first embodiment in that a refractive index of each of the filter membranes (**61***a*, **61***b*, and **61***c*) is adjusted by adjusting a composition of an oxide of amorphous silicon SiO_x.

[0246] An optical thickness of each of the filter membranes is smaller than a thickness equivalent to one half of a wavelength of a color to be transmitted, by a thickness corresponding to an amount of light of the color to be transmitted absorbed by amorphous silicon. This is same as the first embodiment. With this construction, it is possible that a local maximal value of a light transmittance appears at a wavelength of a color to be transmitted.

[0247] Here, a wavelength % of red is 650 nm, a wavelength λ of green is 560 nm, and a wavelength λ of blue is 490 nm. Therefore, one half of the wavelength λ of red is 325 nm, one half of the wavelength λ of green is 280 nm, and one half of the wavelength λ of blue is 245 nm. Since an optical thickness is smaller than a thickness equivalent to one half of a wavelength of a color to be transmitted, by a thickness corresponding to an amount of light of the color to be transmitted absorbed by amorphous silicon, an optical thickness of the red filter membrane is 315 nm, an optical thickness of the green filter membrane is 265 nm, and an optical thickness of the blue filter membrane is 235 nm. A light absorbed amount is obtained by an absorption coefficient of an oxide of amorphous silicon SiO_x and an optical thickness of a filter membrane.

[0248] Refractive indexes na, nb, and nc of an oxide of amorphous silicon SiO_x composing the filter membranes (**61***a*, **61***b*, and **61***c*) are adjusted to 4.5, 4.25, and 4.0 respectively. A refractive index can be adjusted by adjusting an oxygen additive amount when an oxide of amorphous silicon SiO_x is formed. Regarding SiO_x, the more an oxygen additive amount is, the smaller a refractive index is.

[0249] As a result, physical thicknesses (da, db, and dc) of each of the filter membranes (**61***a*, **61***b*, and **61***c*) are da=70 nm, db=62 nm, and dc=59 nm respectively.

[0250] Compared the seventh embodiment with the first embodiment regarding a film thickness difference of each of the filter membranes, the film thickness difference of the seventh embodiment is smaller than the film thickness difference of the first embodiment. This is because a refractive index of each of the filter membranes is adjusted to be smaller as a wavelength of a color to be transmitted is shorter in the seventh embodiment. The smaller a film thickness difference is, the easier the planarizing layer **22** and the microlens **23** are formed.

[0251] FIG. **17** shows transmission spectra of the filter membranes **61***a*, **61***b*, and **61***c* of the seventh embodiment.

[0252] A curved line **34***a* shows a transmission spectrum of the filter membrane **61***a*. A curved line **34***b* shows a transmission spectrum of the filter membrane **61***b*. A curved line **34***c* shows a transmission spectrum of the filter membrane **61***c*.

[0253] The filter membrane **61***a* has a local maximal value of a light transmittance at the red wavelength of 650 nm. The filter membrane **61***b* has a local maximal value of a light transmittance at the green wavelength of 560 nm. The filter membrane **61***c* has a local maximal value of a light transmittance at the blue wavelength of 490 nm.

[0254] A local maximal value of a transmittance of the filter membrane **61***a* is 79%. A local maximal value of a transmittance of the filter membrane **61***b* is 64%. A local maximal value of a transmittance of the filter membrane **61***c* is 43%. Compared the seventh embodiment with the first embodiment regarding a transmission spectrum of the same filter membrane (for example, the curved line **34***b* and the curved line **31***b*), the local maximal value (64%) of a transmittance of the seventh embodiment is larger than the local maximal value (61%) of a transmittance of the first embodiment. It can be expected that because an absorption coefficient of an oxide of amorphous silicon SiO_x is smaller than an absorption coefficient of amorphous silicon, a transmittance increases.

[0255] Note that if a film thickness difference of a filter membrane is equal to or less than 15% that is a maximum film thickness among the filter membranes (**61***a*, **61***b*, and **61***c*), the image sensor can be easily planarized.

Eighth Embodiment

[0256] In an eighth embodiment, an example that the antireflection film **30** is formed on a main surface of each of the filter membranes (**61***a*, **61***b*, and **61***c*) facing a light source is described. Since other constructions are same as the seventh embodiment, an explanation thereof is omitted.

[0257] FIG. **18** is a cross section of a substrate showing a construction of pixels (**1***a*, **1***b*, and **1***c*) of the eighth embodiment.

[0258] The antireflection film **30** is formed on the main surface of each of the filter membranes (**61***a*, **61***b*, and **61***c*) facing the light source. The antireflection film **30** is composed of silicon nitride and a physical thickness thereof is 50 nm.

[0259] Note that physical thicknesses of each of the filter membranes **61***a*, **61***b*, and **61***c* are same as the seventh embodiment, and are 70 nm, 62 nm, and 59 nm respectively.

[0260] FIG. **19** shows transmission spectra of the filter membranes **61***a*, **61***b*, and **61***c* of the eighth embodiment.

[0261] A curved line **35***a* shows a transmission spectrum of the filter membrane **61***a*. A curved line **35***b* shows a transmission spectrum of the filter membrane **61***b*. A curved line **35***c* shows a transmission spectrum of the filter membrane **61***c*.

[0262] The filter membrane **61***a* has a local maximal value of a light transmittance at a red wavelength of 650 nm. The filter membrane **61***b* has a local maximal value of alight transmittance at a green wavelength of 560 nm. The filter membrane **61***c* has a local maximal value of a light transmittance at a blue wavelength of 490 nm.

[0263] Compared the eighth embodiment with the seventh embodiment regarding a transmission spectrum of the same filter membrane (for example, the filter membrane **61***b*: the curved line **35***b* and the curved line **34***b*), the local maximal value (67%) of a transmittance of the eighth embodiment is larger than the local maximal value (64%) of a transmittance of the seventh embodiment. This is because a light reflectance decreases by providing the antireflection film **30**.

[0264] The following describes a material and a refractive index of each part in which the incident light **24** enters. Note that the refractive index indicates a value when a wavelength of the incident light is 560 nm.

[0265] Opening **20**: silicon dioxide, a refractive index: 1.46

[0266] Filter membrane **61**: an oxide of amorphous silicon, a refractive index: 4 to 5

[0267] Insulating layer **13**: silicon dioxide, a refractive index: 1.46

[0268] Photoelectric conversion unit **17**: N-type silicon, a refractive index: 4

[0269] The incident light **24** is concentrated by the microlens **23**, and reached to the photoelectric conversion unit **17** through the opening **20** and each of the filter membranes (**61***a*, **61***b*, and **61***c*). Generally, when light enters in one medium to another medium, a reflectance is determined by a ratio of a refractive indexes of two media. The following describes a reflectance R when light enters from a medium having a refractive index n**1** to a medium having a refractive index n**2**.

$$R=((n1-n2)/(n1+n2))^2$$

[0270] When light enters from silicon dioxide (a refractive index: 1.46) that is generally used as a planarizing layer to an oxide of amorphous silicon (a refractive index: 4 to 5), a reflectance is about 25%. On the other hand, when light enters from silicon nitride (a refractive index: 2.00) to an oxide of amorphous silicon (a refractive index: 4 to 5), a reflectance is about 15%. In other words, since a reflectance decreases by 10%, a transmittance increases. As a result, a light amount that enters in the photoelectric conversion unit **17** in each of the pixels increases, and a sensitivity of the solid-state image sensor **1** is improved. This is effective as a method for preventing a sensitivity from decreasing because of the miniaturization of pixels.

[0271] By forming silicon nitride on an oxide of amorphous silicon as each of the filter membranes (**61***a*, **61***b*, and **61***c*), there are effects of not only improving a sensitivity but also increasing the reliability and the humidity resistance of the solid-state image sensor **1**.

[0272] When a reflectance decreases because the antireflection film **30** is formed on the main surface of each of the filter membranes (**61***a*, **61***b*, and **61***c*), there is the possibility that a wavelength indicating a local maximal value of a transmittance of each of the filter membranes (**61***a*, **61***b*, and **61***c*) shifts to a long-wavelength side. In this case, there is need to correct an optical thickness of each of the filter membranes (**61***a*, **61***b*, and **61***c*), or a weighting factor of a transformation matrix.

Ninth Embodiment

[0273] In a ninth embodiment, an example that the wavelength distribution of an absorption coefficient of each of filter membranes (**71***a*, **71***b*, and **71***c*) is different is described.

[0274] FIG. **20** is a cross section of a substrate showing a construction of pixels (**1***a*, **1***b*, and **1***c*) of the ninth embodiment.

[0275] In the ninth embodiment, each of the filter membranes (**71***a*, **71***b*, and **71***c*) is composed of amorphous silicon (a-Si), polysilicon (p-Si), and titanium oxide (TiO_2) respectively. In other words, a filter membrane having a shorter wavelength of a color to be transmitted is composed of an inorganic material having a smaller light absorption coefficient in an optical wavelength region. Since each of materials composing each of the filter membranes (**71***a*, **71***b*, and **71***c*) has a different absorption coefficient in an optical wavelength region, a light transmittance varies widely.

[0276] FIG. **21** shows transmission spectra of the filter membranes **71***a*, **71***b*, and **71***c* of the ninth embodiment.

[0277] A curved line **36***a* shows a transmission spectrum of the filter membrane **71***a*. A curved line **36***b* shows a transmission spectrum of the filter membrane **71***b*. A curved line **36***c* shows a transmission spectrum of the filter membrane **71***c*.

[0278] With regard to amorphous silicon (a-Si), the wavelength distribution of a light absorption coefficient is different by controlling a growth method and a growth temperature. In other words, a transmittance to a wavelength is different, and same applies to polysilicon (p-Si) and titanium oxide (TiO_2). Therefore, as shown in FIG. **21**, a transmittance varies in an optical wavelength region. By determining each of the coefficients in the transformation matrix X_{11} to X_{33} according to this transmission spectrum, each of signals of red, green, and blue can be obtained.

[0279] As described above, with regard to the filter membranes of the ninth embodiment, a wavelength region of transmitted light can be determined by adjusting a light absorption coefficient so as to be different according to colors.

Tenth Embodiment

[0280] In a tenth embodiment, a manufacturing method of each of the filter membranes (**61***a*, **61***b*, and **61***c*) will be described.

[0281] FIG. **22** is a cross section of a process showing a manufacturing method of the filter membrane **61** of the tenth embodiment.

[0282] FIG. **22** (*a*) shows a pixel after a first application process.

[0283] In the first application process, photoresist (PR) **401** is applied on a whole upper part of a silicon oxide film of the light shielding film forming layer **14**.

[0284] FIG. **22** (*b*) shows a pixel after a first exposure and development process.

[0285] In the first exposure and development process, the photoresist (PR) **401** that is applied in the first application process is exposed with a certain pattern mask. Then, the exposed portion is removed and photoresist in a rest portion is cured. With this construction, only the photoresist **401** corresponding to the pixel **1***a* can be removed.

[0286] FIG. **22** (*c*) shows a pixel after a first film formation process.

[0287] In the first film formation process, an oxide of amorphous silicon **402** is formed after the first exposure and development process. With regard to an oxide of amorphous silicon, when a film is formed, a PVD (Physical Vapor Deposition) method is used. At this time, an oxygen flow rate is controlled so that the oxide of amorphous silicon **402** has a composition in which a refraction index is 4.5. A temperature of forming a film is set in a range of an ambient temperature to 400° C. inclusive. When a thickness of the oxide of amorphous silicon **402** is 70 nm, the film formation is stopped.

[0288] FIG. **22** (*d*) shows a pixel after a first removing process.

[0289] In the first removing process, the photoresist **401** remaining in the first exposure and development process is removed. At the same time, the amorphous silicon **402** formed on the photoresist **401** is also removed.

[0290] FIG. **22** (*e*) shows a pixel after a second application process.

[0291] In the second application process, photoresist (PR) **403** is applied after the first removing process.

[0292] FIG. **22** (*f*) shows a pixel after a second exposure and development process.

[0293] In the second exposure and development process, the photoresist (PR) **403** that is applied in the second application process is exposed with a certain pattern mask. Then, the exposed portion is removed and photoresist in a rest portion is cured. With this construction, only the photoresist **403** corresponding to the pixel **1***b* can be removed.

[0294] FIG. **22** (*g*) shows a pixel after a second film formation process.

[0295] In the second film formation process, an oxide of amorphous silicon **404** is formed after the second exposure and development process. With regard to an oxide of amorphous silicon, when a film is formed, a PVD (Physical Vapor Deposition) method is used. At this time, an oxygen flow rate is controlled so that the oxide of amorphous silicon **404** has a composition in which a refraction index is 4.25. A temperature of forming a film is set in a range of an ambient temperature to 400° C. inclusive. When a thickness of the oxide of amorphous silicon **404** is 62 nm, the film formation is stopped.

[0296] FIG. **22** (*h*) shows a pixel after a second removing process.

[0297] In the second removing process, the photoresist **403** remaining in the second exposure and development process is removed. At the same time, the amorphous silicon **404** formed on the photoresist **403** is also removed.

[0298] FIG. **22** (*i*) shows a pixel after a third removing process.

[0299] Following the second removing process, an oxide of amorphous silicon **405** is formed by performing the same process mentioned above. A thickness of the oxide of amorphous silicon **405** is set at 59 nm.

[0300] As described above, since a difference of each of the filter membranes is only a composition, there is no need to manage a material according to colors in a manufacturing process of a filter membrane. Therefore, the manufacturing cost of a filter membrane can be reduced.

[0301] Each of the filter membranes is formed by a semiconductor process. Therefore, the manufacturing cost of a filter membrane can be reduced.

[0302] Up to now, the solid-state image sensor of the present invention has been described specifically through the embodiments. However, the technical scope of the present invention is not limited to the above-described embodiments. The following are modifications.

(1) In the first embodiment, although the physical thicknesses (da, db, and dc) of each of the filter membranes are da=70 nm, db=55 nm, and dc=40 nm respectively, the physical thicknesses are not limited to this. The physical thicknesses (da, db, and dc) just have to satisfy the following condition. The condition is that da>db>dc, 0<dc<100, 10<db<150, and 20<da<200. As a result, color separation of RGB can be realized by controlling a weighting factor of a transformation matrix.

[0303] Also, in the first embodiment, although the filter membrane **21***c* is used, color separation of RGB can be realized without the filter membrane **21***c* by controlling a weighting factor of a transformation matrix. Same applies to the sixth embodiment.

[0304] Moreover, a light transmittance can be improved by thinning each of the physical thicknesses more.

(2) In the second embodiment, the antireflection film **30** is formed on a main surface of each of the filter membranes (**21***a*, **21***b*, and **21***c*). If the antireflection film **30** is formed, there is the possibility that a wavelength indicating a local maximal value of a transmittance of each of the filter membranes (**21***a*, **21***b*, and **21***c*) shifts to a long-wavelength side. In this case, there is need to correct an optical thickness of each of the filter membranes (**21***a*, **21***b*, and **21***c*), or a weighting factor of a transformation matrix. As a result color separation can be realized properly.

(3) In the fourth embodiment, only amorphous silicon is used for a filter material. However, a filter material is not limited to amorphous silicon, and polysilicon, single-crystal silicon, or a material mainly containing silicon can be used. Same applies to the fifth embodiment.

(4) In the sixth embodiment, although titanium dioxide is used as a transparent material composing a filter membrane, the transparent material is not limited to this. For example, tantalum oxide (tantalum pentoxide and the like) or niobium oxide (niobium pentoxide and the like) can be used in order to realize a solid-state image sensor having a high sensitivity.

(5) In the sixth embodiment, an antireflection film may be formed on the main surface of each of the filter membrane (**51***a*, **51***b*, and **51***c*). This can improve much higher sensitivity of a solid-state image sensor. As a material of an antireflection film, silicon nitride, silicon oxide nitride, silicon oxide and the like may be used.

[0305] When a reflectance decreases because the antireflection film is formed on the main surface of each of the filter membrane (**51***a*, **51***b*, and **51***c*), there is the possibility that a wavelength indicating a local maximal value of a transmittance of each of the filter membrane (**51***a*, **51***b*, and **51***c*) shifts to a long-wavelength side. In this case, there is need to correct

an optical thickness of each of the filter membrane (Sa, **51***b*, and **51***c*), or a weighting factor of a transformation matrix.

(6) In the sixth embodiment, although the physical thicknesses (da, db, and dc) of each of the filter membranes are da=125 nm, db=105 nm, and dc=90 nm respectively, the physical thicknesses are not limited to this. The physical thicknesses (da, db, and dc) just have to satisfy the following condition. The condition is that da>db>dc, 0<dc<200, 50<db<250, and 75<da<300. As a result, color separation of RGB can be realized by controlling a weighting factor of a transformation matrix.

(7) In the embodiments, only a characteristic of a color filter in an optical wavelength region is indicated. However, light having a different band may be transmitted in a wavelength region such as an infrared region, an ultraviolet region, and the like by varying a thickness of a color filter properly.

(8) In the embodiments, an optical thickness of each of the is smaller than a thickness equivalent to one half of a wavelength of a color to be transmitted, by a thickness corresponding to an amount of light of the color to be transmitted absorbed by an inorganic material. When a filter membrane is used for a color image sensor, a range of the optical thickness is 150 nm to 400 nm inclusive.

INDUSTRIAL APPLICABILITY

[0306] The solid-state image sensor of the present invention can be used as a solid-state image sensor of a digital camera, a video camera, and the like.

1. A solid-state image sensor having a plurality of pixels, wherein

each of the plurality of pixels includes a filter membrane for transmitting light of a predetermined color, and a photoelectric conversion unit for converting the light transmitted through the filter membrane into a charge;

the filter membrane is a single layer film composed of an inorganic material; and

an optical thickness of the single layer film is smaller than a thickness equivalent to one half of a wavelength of the predetermined color, by a thickness corresponding to an amount of the light of the predetermined color absorbed by the inorganic material.

2. The solid-state image sensor of claim **1**, wherein

the larger an absorption coefficient of the inorganic material at a light wavelength of the predetermined color is, the smaller the optical thickness of the single layer film is.

3. The solid-state image sensor of claim **1**, wherein

a composition of the inorganic material is identical for the plurality of pixels.

4. The solid-state image sensor of claim **1**, wherein

a composition of the inorganic material is different according to which of a plurality of colors is to be transmitted; and

the shorter a wavelength of each of the colors is, the smaller a refractive index of the inorganic material is.

5. The solid-state image sensor of claim **1**, wherein

a refractive index of the inorganic material is equal to or larger than 3.

6. The solid-state image sensor of claim **1**, wherein

the inorganic material is amorphous silicon,

polysilicon, single-crystal silicon, or a material mainly containing silicon.

7. The solid-state image sensor of claim **1**, wherein

the inorganic material is titanium oxide, tantalum oxide, or niobium oxide.

8. The solid-state image sensor of claim **1**, wherein

each of the plurality of pixels further includes an antireflection film that is provided on a main surface of the filter membrane facing a light source and has a smaller refractive index than the filter membrane.

9. The solid-state image sensor of claim **8**, wherein

the antireflection film is composed of silicon nitride, silicon dioxide, or silicon oxide nitride.

10. The solid-state image sensor of claim **1**, wherein

the photoelectric conversion unit is formed in a part of a substrate;

each of the plurality of pixels further includes a light shielding film that covers the substrate and has an opening provided in a position corresponding to the photoelectric conversion unit; and

the filter membrane is provided between the light shielding film and the substrate.

11. The solid-state image sensor of claim **1**, wherein

each of the plurality of pixels is provided so that a main surface of the filter membrane facing the photoelectric conversion unit is provided on a same plane;

each of the plurality of pixels further includes a planarizing layer provided on a main surface of the filter membrane facing a light source; and

the larger a physical thickness of the filter membrane is, the smaller a thickness of the planarizing layer is.

12. The solid-state image sensor of claim **11**, wherein

each of the plurality of pixels further includes a microlens provided on a main surface of the planarizing layer facing the light source.

13. A solid-state image sensor having a plurality of pixels, wherein

each of the plurality of pixels includes a filter membrane for transmitting light of a predetermined color, and a photoelectric conversion unit for converting the light transmitted through the filter membrane into a charge;

the filter membrane is a single layer film composed of an inorganic material; and

an optical thickness of the single layer film is set according to which of a plurality of colors is to be transmitted in a range of 150 nm to 400 nm inclusive.

14. A solid-state image sensor having a plurality of pixels, wherein

each of the plurality of pixels includes a filter membrane for transmitting light of a predetermined color, and a photoelectric conversion unit for converting the light transmitted through the filter membrane into a charge;

the shorter a wavelength of the predetermined color is, the smaller a light absorption coefficient in an optical wavelength region of an inorganic material composing the filter membrane is.

15. The solid-state image sensor of claim **14**, wherein

the light absorption coefficient of the filter membrane is different by varying a composition of the inorganic material.

16. The solid-state image sensor of claim **14**, wherein an optical thickness of the filter membrane is smaller than a thickness equivalent to one half of a wavelength of the predetermined color, by a thickness corresponding to an amount of the light of the predetermined color absorbed by the inorganic material.

* * * * *