IN THE UNITED STATES PATENT AND TRADEMARK OFFICE

SKULLCANDY, INC., Petitioner, v. EARIN AB, Patent Owner.	In re Patent of: Olle Lindén et al. U.S. Patent No. 9,402,120 Issue Date: July 26, 2016 App. Serial No. 14/478,698 Filing Date: September 5, 2014 Title: WIRELESS EARBUDS Att'y Dkt. No. 3510-113

DECLARATION OF DR. JEREMY COOPERSTOCK

EXHIBIT: 1007

TABLE OF CONTENTS

I. **INTRODUCTION** 1

II. QUALIFICATIONS 2

III. BACKGROUND 7

IV. EXECUTIVE SUMMARY 8

V. REVIEW OF THE '120 PATENT 9

A. Disclosed Subject Matter Relevant to Claims 20 and 21 9

B. Summary of the Prosecution History 14

C. Interpretation of Claim Terms 15

D. Person of Ordinary Skill in the Art 15

VI. REVIEW OF PRIOR ART REFERENCES 17

A. U.S. Patent App. Pub. No. 2011/0286615 to Olodort et al. 17

B. U.S. Patent App. Pub. No. 2009/0073950 to Guccione et al. 21

C. Japanese Patent App. Pub. No. 2004236163 to Yamashita et al. 21

D. Specification of the Bluetooth® System, Covered Core Package Version 4.1, published December 3, 2013 22

VII. ANALYSIS OF THE PRIOR ART WITH RESPECT TO THE PATENT CLAIMS 23

A. A POSITA would have been motivated to combine the teachings of Olodort and Guccione so as to produce the subject matter of independent claim 20. 23

B. The subject matter of dependent claim 21 would similarly have resulted from a POSITA combining the teachings of Olodort and Guccione. 34

C. Should the disclosures of Olodort and Guccione be found insufficient to teach all the claim limitations, Yamashita compensates for any deficiencies. 35

D. Should the disclosures of Olodort, Guccione, and Yamashita be found insufficient to teach all the claim limitations, the Bluetooth® Spec. 4.1 compensates for any deficiencies. 36

E. The modifications and combinations of the prior art required to arrive at the claimed subject matter would have resulted from the application of ordinary skill by a POSITA. 39

VIII. LEGAL STANDARDS 40

A. Anticipation 40

B. Obviousness 41

IX. CLOSING REMARKS 42

1. I, Jeremy Cooperstock, of Montreal, Canada, declare that:

I. INTRODUCTION

2. I have been retained by Trask Britt, P.C., on behalf of Skullcandy, Inc. ("Petitioner"), as an independent expert consultant in this inter partes review ("IPR") proceeding before the United States Patent and Trademark Office ("USPTO").

3. I have been asked by Petitioner's counsel ("Counsel") to consider whether certain references describe, teach, or suggest the limitations required by Claims 20 and 21 of U.S. Patent No. 9,402,120 (the "'120 patent") (Ex. 1001[1]). My opinions and the bases for my opinions are set forth below. My opinions are based on my education and experience.

4. In preparing this Declaration, I have considered my own knowledge and experience, including my teaching and work experience in the fields of audio reproduction devices and wireless communication protocols, such as wireless earbuds and Bluetooth® communications, and my experience working with others involved in those fields.

[1] Other than the Appendix, all exhibits referred to in this Declaration accompany the Petition supported by this Declaration.

5. I have no financial interest in either party or in the outcome of this proceeding. I am being compensated for my work as an expert on an hourly basis for all tasks. My compensation is not dependent on the outcome of these proceedings or on the content of my opinions.

II. QUALIFICATIONS

6. I am a professor in the Department of Electrical and Computer Engineering at McGill University. My curriculum vitae is provided as Appendix A.

7. I earned a Bachelor of Applied Science (B.A.Sc) degree in Electrical Engineering (Computer Engineering Option) with Honors from the University of British Columbia in 1990, a Master of Science (M.Sc.) degree in Computer Science from the University of Toronto in 1992, and a Doctor of Philosophy (Ph.D.) degree in Electrical and Computer Engineering from the University of Toronto in 1996. My dissertation on "Reactive Environments and Augmented Media Spaces" was nominated by the University of Toronto for the Natural Sciences and Engineering Research Council (NSERC) Doctoral Dissertation Award.

8. I am an expert in the field of network audio, wireless audio streaming, and audio delivery devices. I have studied, taught, practiced, and researched the design of such technologies for over 30 years, and I have been

leading research and development activities pertaining to such systems since at least 1998.

9. From 1987 to 1988, I worked at IBM Research on very large scale integration (VLSI) circuit simulation, and in 1989, I worked at the IBM T.J. Watson Research Center on very long instruction word (VLIW) simulation. In 1990, I worked at Fibronics Research to develop and test an FDDI-to-token ring bridge for network communication.

10. After obtaining my Doctorate degree, I carried out research and development work at the Sony Computer Science Laboratory in Tokyo, Japan from 1996 to 1997, working in part on “smart” consumer electronics.

11. I have been employed at McGill University since November 1997, where I am currently a Full Professor in the Department of Electrical and Computer Engineering, and recently, the endowed Werner Graupe Distinguished Chair in Automation Engineering.

12. I am a member of the Centre for Intelligent Machines, a founding member of the Centre for Interdisciplinary Research in Music Media and Technology, a member of the International Laboratory on Learning System, a member of the McGill Institute for Aerospace Engineering, and an associate member of Biomedical Engineering at McGill University.

13. In this capacity, I conduct and supervise research activities, directing a group of approximately 50 researchers at the Shared Reality Lab, which focuses on computer mediation to facilitate high-fidelity human communication and the synthesis of perceptually engaging, multimodal, immersive environments. Over the span of my academic career, I have supervised more than 100 graduate students and post-doctoral fellows, and approximately 250 undergraduate research students.

14. I have also developed and continue to teach courses on human-computer interaction, artificial intelligence, embedded systems, haptic interaction design, computer architecture, and operating systems.

15. I led the development and demonstrations of the world's first high-fidelity multichannel audio streaming system over the Internet in 1999 and 2000, recognized by a Distinction Award from the Audio Engineering Society, and followed in 2005 by simultaneous low-latency transmission of multiple streams of uncompressed high-definition video as part of the McGill Ultra-Videoconferencing system. This work was recognized by an award for Most Innovative Use of New Technology from the Association for Computing Machinery (ACM) and the Institute of Electrical and Electronics Engineers (IEEE) Supercomputing.

16. Among other projects, I led the development and supported ongoing use of a semi-automated classroom environment (the "Intelligent

Classroom"), a high-fidelity orchestra rehearsal simulator ("Open Orchestra,"), a simulation environment that renders graphic, audio, and vibrotactile effects in response to footsteps ("Natural Interactive Walking"), and a mobile game treatment for amblyopia that was licensed to Novartis.

17. The research and development I supervised on the Autour project earned the Hochhausen Research Award from the Canadian National Institute for the Blind and an Impact Award from the Canadian Internet Registry Association. My Real-Time Emergency Response project won the Gold Prize (brainstorm round) of the Mozilla Ignite Challenge. I have carried out significant research involving design and implementation of haptic feedback systems, virtual and augmented reality, and mobile computing applications. My research experience includes design of systems employing audio delivery over wireless network communication.

18. My research activities are funded by industry contracts, collaboration programs, and government grants. In the past 5 years, I have obtained grants and contracts for my research program of approximately three million dollars.

19. I led the theme of Enabling Technologies for a Networks of Centres of Excellence on Graphics, Animation, and New Media (GRAND), and chaired the Technical Committee on Network Audio Systems. Among other visiting academic

appointments, I was a visiting professor at Bang & Olufsen, Denmark, where I conducted research on telepresence technologies as part of the World Opera Project.

20. I have authored and co-authored more than 200 journal articles and peer-reviewed conference proceedings papers, mostly concerning human-computer interaction and applications of these technologies. Eight of my publications were finalists or winners of "best paper", "honorable mention", and similar awards from scholarly societies. A complete list of my publications is contained in my curriculum vitae.

21. My professional affiliations include services in various professional organizations and serving as a reviewer for a number of technical publications, journals, and conferences, which are listed in my curriculum vitae. I served as an Associate Editor of the Journal of the Audio Engineering Society, and presently serve as Associate Editor in Chief for the IEEE Transactions on Haptics, and Associate Editor for the Frontiers in Virtual Reality.

22. I have also served as an expert in numerous legal proceedings, both on behalf of patent owners and petitioners, including proceedings involving industrial design, hardware architecture, power management, and firmware of wireless audio earbuds and headphone technologies. A list of cases in which I have

provided written declarations, testified at trial or by deposition is provided in my curriculum vitae.

23. My experience in academic and practical situations as well as my hands-on experience with wireless communication systems such as Bluetooth® systems provides me with an appreciation of the technology relevant to the ’120 Patent.

III. BACKGROUND

24. I have reviewed the ’120 Patent and relevant excerpts of the prosecution history of the ’120 Patent (“Prosecution History”), including the Office Action dated November 30, 2015 (Ex. 1008) and the Notice of Allowance dated May 10, 2016 (Ex. 1009). The ’120 Patent was filed on September 5, 2014, and does not claim priority to any earlier date. See Ex. 1001, Face. For purposes of this declaration and to review and apply prior art references, I am using September 5, 2014, as the earliest possible priority date (“Critical Date”).

25. I have reviewed the following references:

26. U.S. Patent Application Publication No. 2011/0286615 published November 24, 2011, to Olodort et al. (“Olodort”) (Ex. 1002);

27. U.S. Patent Application Publication No. 2009/0073950 published March 19, 2009, to Guccione et al. (“Guccione”) (Ex. 1003);

28. Certified Translation of Japanese Patent Application Publication No. 2004/236163 published August 19, 2004, to Yamashita et al. into English ("Yamashita") (Exs. 1005A, 1005B); and

29. Selected Excerpts of Specification of the Bluetooth® System, Covered Core Package Version 4.1, published December 3, 2013 ("Bluetooth® Spec. 4.1") (Ex. 1006).

30. Counsel has informed me that I should consider these materials through the lens of a person of ordinary skill in the art ("POSITA," which is discussed in more detail below) related to the '120 Patent at the time of the earliest possible priority date of the '120 Patent, and I have done so during my review of these materials. Unless otherwise stated, my analysis and conclusions below refer to the knowledge of a POSITA as of the Critical Date.

IV. EXECUTIVE SUMMARY

31. This Declaration explains the conclusions that I have formed based on my knowledge and experience and my review of the prior art references listed above. To summarize, I have concluded that:

32. Claims 20 and 21 would have been obvious to a POSITA considering Olodort and Guccione;

33. Claims 20 and 21 would have been obvious to a POSITA considering Olodort, Guccione, and Yamashita; and

34. Claims 20 and 21 would have been obvious to a POSITA considering Olodort, Guccione, Yamashita, and the Bluetooth® Spec. 4.1.

V. REVIEW OF THE ’120 PATENT

A. Disclosed Subject Matter Relevant to Claims 20 and 21

35. I have reviewed the ’120 Patent, titled “Wireless Earbuds.” Ex. 1001, Title. The ’120 Patent includes 22 claims, of which claims 20 and 21 are considered in connection with this Declaration. Ex. 1001, 12:41–16:21. Claim 20 is an independent claim and claim 21 is a dependent claim depending from claim 20. Ex. 1001, 14:50–15:19.

36. The ’120 Patent relates to wireless earbuds “having an idle mode and an operational mode” and methods for controlling when the wireless earbuds enter those modes. *See* Ex. 1001 1:40–2:2; *see also* Abstract; 9:48–10:48; FIG. 12.

37. The Background section of the ’120 Patent states that wireless earbuds are the subject of “expected growing popularity and desire” and that “[i]mportant characteristics of wireless earbuds are physical size, convenience and user-friendliness, duration between battery chargings, operational reliability and, of course, the perceived acoustic quality of the streamed audio.” Ex. 1001, 1:11–23.

38. The ’120 Patent depicts and describes wireless earbuds 10 in connection with FIGS. 5 through 7. Ex. 1001, 5:23–7:55. FIG. 7 of the ’120 Patent is reproduced below:

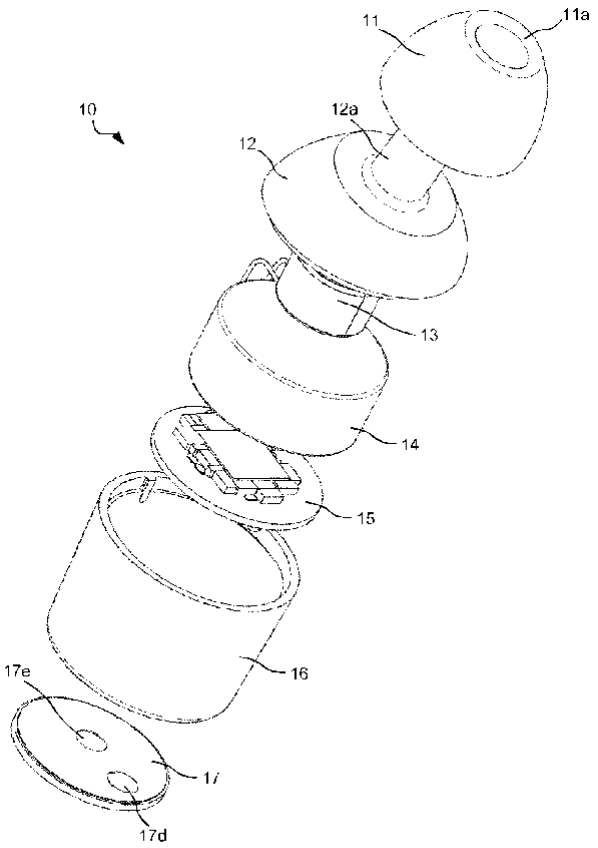

Fig 7

Ex. 1001, FIG. 7

The wireless earbuds 10 have an earbud housing 12, 16, a loudspeaker element 13, and a rechargeable battery 14. Ex. 1001, 5:37–45. The wireless earbuds 10 also have "at least one main printed circuit board 15 having disposed thereon circuitry for wireless radio communication, audio codec and earbud operation control." Ex. 1001, 5:37–45.

39. "[A] procedure for switching between idle and operational modes for a wireless earbud" is schematically illustrated in FIG. 12 of the '120 Patent,

and described in connection with that schematic. Ex. 1001, 9:48–11:34. FIG. 12 of the ’120 Patent is reproduced below:

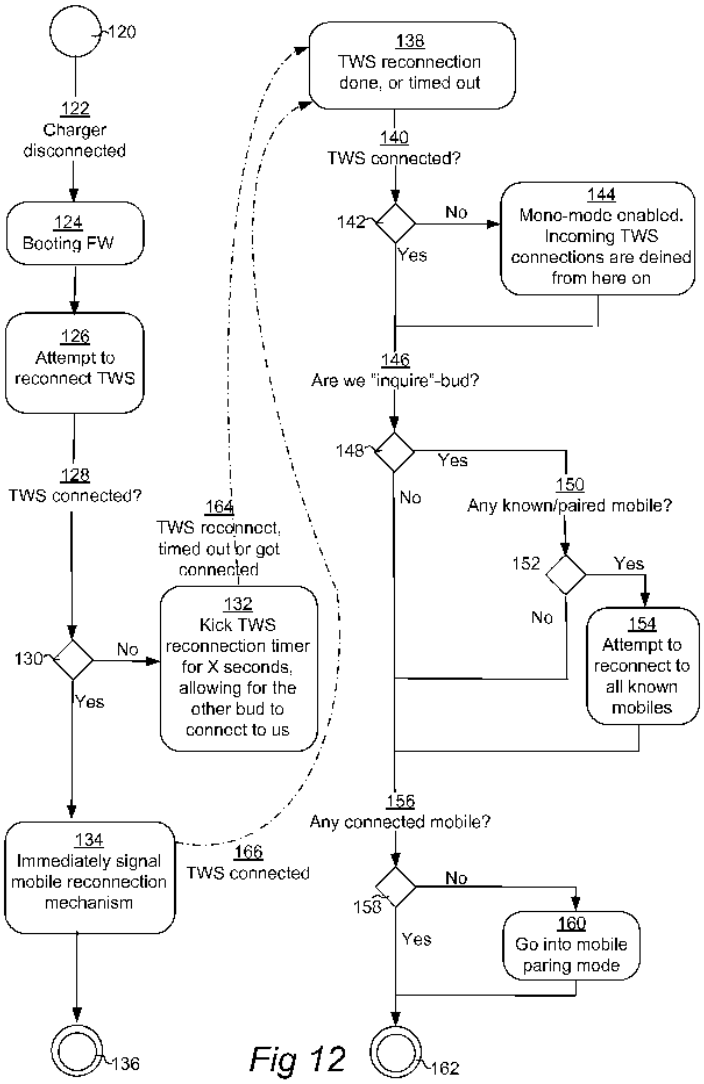

Ex. 1001, FIG. 12

40. The ’120 Patent characterizes the circuitry of the earbuds as being “configured for automatic power preservation by performing the … steps” shown

and described in connection with FIG. 12, relevant portions of which are quoted below. Ex. 1001, 9:59–61.

41. "In response to detecting connection to a charger, the earbud (e.g. earbud 10*a*) will enter idle mode, wherein existing connections to a second wireless earbud (e.g. earbud 10*b*) and to a wireless audio streaming host device (e.g. device 100) will be disconnected." Ex. 1001, 10:3–7.

42. "Then, at a later point of time when the wireless earbud is removed from the charger, disconnection of the battery from the charger will be detected, see 122 in FIG. 12. In response, the wireless earbud will enter operational mode by" performing further described steps. Ex. 1001, 10:8–12.

43. "In step 126, a true wireless stereo, TWS, reconnection with the second wireless earbud will be attempted." Ex. 1001, 10:14–16.

44. "If the attempt is successful, the wireless earbud will be operated as a TWS audio receiver, see 166, in association with the second wireless earbud. Otherwise, the wireless earbud will be operated as a mono wireless audio receiver, see 144, if the failure persists after repeated additional attempts, as seen at 132 and 164." Ex. 1001, 10:17–22.

45. "When the wireless earbud is operated as a TWS audio receiver, as verified at 140 and 142, it is determined at 146 and 148 whether the wireless

earbud is a master device ('inquiry bud') or a slave device with respect to the second wireless earbud." Ex. 1001, 10:23–27.

46. "If the wireless earbud is determined to be a master device, attempts are made at 150 and 154 to reconnect with the wireless audio streaming host device (e.g. device 100), and other known wireless audio streaming host devices if applicable." Ex. 1001, 10:28–32.

47. "If reconnection with the wireless audio streaming host device (e.g. device 100) has been successful, see 156 and 158, then the execution ends at 162 with a successful automatic reconnection both with the second earbud and with the wireless audio streaming host device completely without any use of manual intervention by the earbud user (other than removing the earbud from the charger). Hence, a power-efficient and automatic procedure for switching between idle and operational modes for a wireless earbud, without requiring any manual actuators like buttons, etc, is provided." Ex. 1001, 10:33–42.

48. "Should reconnection with the wireless audio streaming host device (e.g. device 100) on the other hand fail, a more time and power consuming pairing procedure with the wireless audio streaming host device and other known wireless audio streaming host devices, if applicable, will be initiated, see 158 and 160 in FIG. 12." Ex. 1001, 10:43–48.

B. Summary of the Prosecution History

49. During prosecution of the application that issued as the ’120 Patent, the Examiner issued only one Office Action on November 30, 2015, as shown in Exhibit 1008. On page 3 of the Office Action, the Examiner stated that, “Claims 18–20 are allowed.” Ex. 1008, p. 3. The Examiner issued a Notice of Allowance on May 10, 2016, as shown in Exhibit 1009.

50. The Notice of Allowance asserts that the claims are allowable because the following “features, in combination with the other features of Claim[] … 18 … are not anticipated by, nor made obvious over, the prior art of record.” Ex. 1009, p. 2.

> [W]herein the earbud housing comprises a front housing portion and an essentially cylindrical or frusto-conical rear housing portion, the rear housing portion comprising a first end proximate to the front housing portion and a second distal end, the rear housing portion together with the front housing portion accommodating the main printed circuit board inside the rear housing portion nearest its second distal end, then the rechargeable battery and the loudspeaker element in successive order towards the front housing portion along the longitudinal main axis of the earbud housing.

Ex. 1009, p. 2.

51. Aside from the mention of a “main printed circuit board,” these claim limitations were not present in claim 18 of the version of the application pending at the time and are not present in claim 20 of the ’120 Patent. Ex. 1001, 14:50–15:15.

C. Interpretation of Claim Terms

52. I understand that, for purposes of my analysis in this IPR proceeding, the terms appearing in a patent claim should be interpreted according to their "ordinary and customary meaning of such claim as understood by one of ordinary skill in the art and the prosecution history pertaining to the patent." 37 C.F.R. § 42.100(b). In that regard, I understand that the best indicator of the meaning of a claim term is its usage in the context of the patent specification as understood by a POSITA. I further understand that the words of the claims should be given their plain meaning unless that meaning is inconsistent with the patent specification or the patent's history of examination before the Patent Office. I also understand that the words of the claims should be interpreted as they would have been interpreted by a POSITA as of the effective filing date of the claims (not the present day). I have used the Critical Date of the '120 Patent as the point in time for claim interpretation purposes. My opinion does not change if the effective filing date is earlier.

D. Person of Ordinary Skill in the Art

53. Based on my experience in this area and taking into account the above references, a POSITA relevant to the '120 Patent as of the Critical Date would have had at least a Bachelor of Science degree in electrical or computer engineering, or a similar field, and one or two years of experience in designing

wireless audio products. More education could compensate for less work experience and vice versa.

54. I base this identification of a POSITA on my professional, academic, and personal experiences, including my knowledge of colleagues and others on or shortly before the Critical Date. Specifically, my experience working with industry, undergraduate and post-graduate students, colleagues from academia, and designers and engineers practicing in industry has allowed me to become directly and personally familiar with the level of skill of individuals and the general state of the art. I am familiar with the knowledge of a POSITA as of the Critical Date.

55. In particular, a POSITA would have known about and had experience with wireless audio reproduction devices, such as wireless headphones, earphones, and earbuds, including what kinds of hardware might be required or beneficial for such devices. A POSITA would also have understood that circuitry, such as a Bluetooth® compliant wireless communication chip, may be included in that hardware and programmed to carry out functions performed by the wireless audio reproduction devices, such as wireless communication, audio processing, and control of device operations. In addition, a POSITA would have known that wireless earbuds were "expected to become increasingly popular" and that "[i]mportant characteristics of wireless earbuds are physical size, convenience and

user-friendliness, duration between battery chargings, operational reliability and, of course, the perceived acoustic quality of the streamed audio," as the '120 patent openly admits. Ex. 1001, 1:11–23.

56. It is customary for a POSITA in the fields of technology relevant to the '120 Patent to be part of a team for developing and engineering wireless audio reproduction devices. As a member of such a team, a POSITA would have regularly drawn on other technical experts and other sources of information, such as repositories of technical tools, systems, and information, and not relied solely on their own training and experience.

57. I understand that a POSITA is expected to use common sense and ordinary creativity, though a POSITA would not be a genius or be capable of exercising extraordinary creativity. Such a POSITA would have been able to combine and modify known hardware and software, adapting them for the particular needs of a given project.

VI. REVIEW OF PRIOR ART REFERENCES

A. U.S. Patent App. Pub. No. 2011/0286615 to Olodort et al.

58. Olodort relates to the hardware and operation of wireless earpieces, which are shown in Olodort as having the form factor of an earbud. FIG. 11A of Olodort depicts in schematic form an example of the wireless earpieces 513A and

513B within a charging case (which Olodort calls a "housing 503"), as shown below:

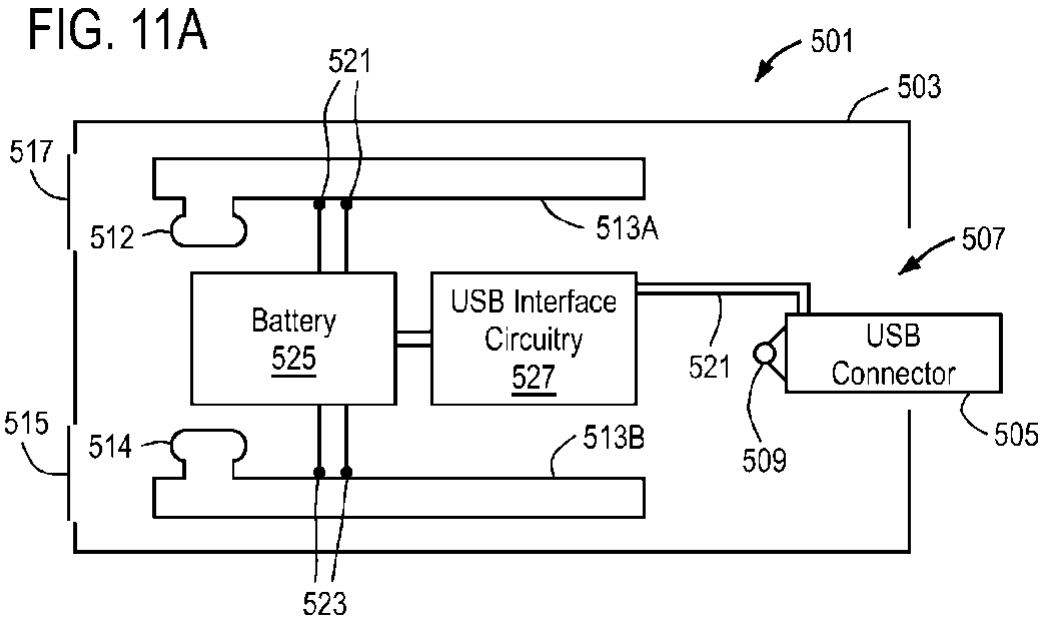

Ex. 1002, FIG. 11A

59. Olodort states that its wireless earpieces are capable of being placed in a low power state, a stereo mode, and a mono mode. Ex. 1002, ¶¶ [0016], [0055].

60. In terms of hardware, Olodort discloses that its wireless earpieces have a body, "a speaker configured to create sound from an electrical output such as an output from a host device (e.g. a cellular telephone, computer, or an entertainment device or other consumer electronic devices)," and a rechargeable battery. Ex. 1002, ¶¶ [0007], [0017]. Olodort's wireless earpieces also have circuitry for wireless communication and for handling input and output, including

audio input and output and controlling operation of the wireless earpieces responsive to user input. Ex. 1002, ¶¶ [0007], [0052], [0055], [0058].

61. Olodort states that the functions of the wireless earpieces "are performed by processing logic that comprises hardware (e.g. circuitry, dedicated logic, etc.), software, or a combination of both." Ex. 1002, ¶ [0048]. FIG. 7A of Olodort depicts in schematic form an electronic system 101 of the wireless earpieces, having circuitry, and for carrying out the functions of the wireless earpieces, as shown below:

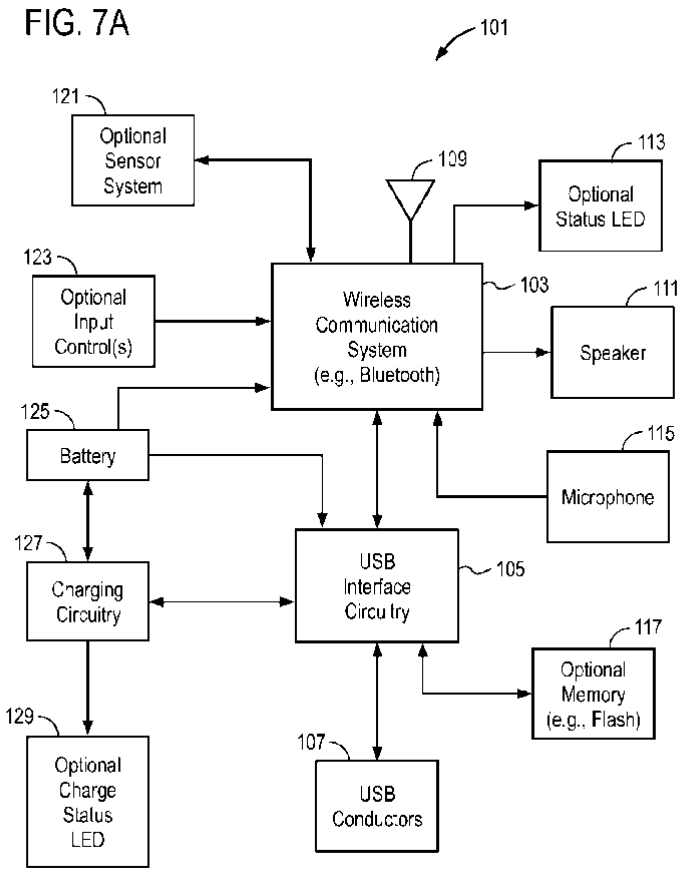

Ex. 1002, FIG. 7A.

62. Among other functionality, the circuitry of the wireless earpieces of Olodort enables entry into a low power state, which can be a standby mode. Ex. 1002, ¶ [0055], claim 38. "When the [system 103] determines that the USB interface, through conductors 107, has been coupled to a power source to charge battery 125," circuitry causes the wireless earpieces of Olodort to enter the low power state. Ex. 1002, ¶ [0055]. After removal from the chambers of the charging housing, the circuitry of the wireless earpieces of Olodort causes them to enter other modes. Ex. 1002, claims 50, 52.

63. "[A]fter being removed from one of the first and the second chambers" of the charging case, "and after the other of the first and the second earpieces is removed from its chamber," both of "the first and the second earpieces are automatically switched to stereo mode." Ex. 1002, claim 52. "[E]ach of the first earpiece and the second earpiece is configured to be used in a mono mode after being removed from one of the first and the second chambers while the other of the first and the second earpieces remains in a low power mode within the other of the first and the second chambers." Ex. 1002, claims 50, 52. After entering the stereo mode, "each of the first earpiece and the second earpiece can be configured to act as master device and when one becomes the master device, the other earpiece will in response act as the slave device." Ex. 1002, Abstract; *see also* ¶¶ [0014], [0055], claims 42, 56, 59.

64. When one of the wireless earpieces of Olodort is designated as the master, that wireless earpiece "receive[s] wirelessly communication signals from a host device … and … transmit[s] wirelessly signals to the other earpiece which is configured to act as a slave device." Ex. 1002, ¶ [0014]; *see also* ¶ [0065], claim 16.

B. U.S. Patent App. Pub. No. 2009/0073950 to Guccione et al.

65. Guccione is in the same general field of technology as Olodort and discloses a wireless audio reproduction device, which Guccione characterizes as "a wireless headset compatible with multiple wireless communications-enabled devices." Ex. 1003, Abstract; ¶ [0001]. The headset of Guccione has an ear bud 287 (see FIGS. 1, 2), a housing 12, a speaker 24, a rechargeable battery 78 (see FIGS. 1, 3, 6), and circuitry for performing various functions. Ex. 1003, ¶¶ [0007], [0035], [0036], [0047], [0048].

66. Guccione states that its headset "will first attempt to reconnect to the last phone used (if any)" after "the headset is powered on." Ex. 1003, ¶ [0060]. "If the phone is out of range or not available, the headset 10 will automatically enter a discoverable state." Ex. 1003, ¶ [0060].

C. Japanese Patent App. Pub. No. 2004236163 to Yamashita et al.

67. Yamashita discloses electronic devices "capable of automatically resuming playback of music and other content data interrupted by the

disconnection of a wireless connection." Ex. 1005A, Abstract, ¶ [0007]. One example of a device, as disclosed in Yamashita, is wireless headphones 20 having a system control unit 51 and a processing unit 64 for reconnecting to an audio player 10. Ex. 1005A, ¶¶ [0011], [0030]–[0032], [0041], [0042]. "[I]f … the reconnection processing unit 64 determines that the reconnection has succeeded or failed, … the reconnection processing unit 64 reconnects to the audio player 10 again. … and the reconnection process is repeated … until the reconnection is successful." Ex. 1005A, ¶ [0042]. Yamashita teaches that battery consumption may be reduced by avoiding "unnecessary reconnection attempts." Ex. 1005A, ¶ [0043].

D. Specification of the Bluetooth® System, Covered Core Package Version 4.1, published December 3, 2013

68. A POSITA as of the Critical Date would have been aware that various wireless communication protocols, such as Bluetooth® and Wi-Fi®, were promulgated and were the subject of ongoing revision and development. A POSITA would have known to reference the specifications of the protocols, and would have sought out up-to-date information about revisions to the specifications, when designing and programming devices to be compliant with the protocols.

69. The Bluetooth® Spec. 4.1 discloses protocols enabling devices to wirelessly connect, disconnect, and reconnect to one another using a "link controller." Ex. 1006, pp. 159–175. The Bluetooth® Spec. 4.1 teaches that the link

controller can operate in different states, including "major states [of]: STANDBY, CONNECTION, and PARK." Ex. 1006, p. 159.

70. "The STANDBY state is the default state in the device," and may be "a low-power mode." Ex. 1006, p. 160. "In the STANDBY state, no connection has been established." Ex. 1006, pp. 161, 163, 172.

71. Having no connection in the standby state, as disclosed in the Bluetooth® Spec. 4.1, ensures a device has "capacity to carry out" inquiry scans and page scans for establishing connections. Ex. 1006, pp. 161, 163, 170, 172.

VII. ANALYSIS OF THE PRIOR ART WITH RESPECT TO THE PATENT CLAIMS

A. A POSITA would have been motivated to combine the teachings of Olodort and Guccione so as to produce the subject matter of independent claim 20.

72. Olodort discloses essentially all of the hardware and operational configuration claimed in independent claim 20 of the '120 Patent.

73. A POSITA would have understood Olodort's disclosure of first and second earpieces, shown in Olodort as earbuds, having a "low power state," "standby mode," "stereo mode," and "mono mode" (Ex. 1002, ¶¶ [0016], [0055], claim 38) to be a "wireless earbud having an idle mode and an operational mode" (Ex. 1001, claim 20, preamble).

74. The hardware of the earpieces disclosed in Olodort includes a "body," "speaker," and "battery … configured to receive power to recharge"

(Ex. 1002, ¶¶ [0007], [0017]), which a POSITA would have understood as being "an earbud housing; a loudspeaker element; [and] a rechargeable battery" (Ex. 1001, claim 20, clauses 1–3).

75. The earpieces known from Olodort "can include a wireless communication system 103," which "can be a Bluetooth chipset." Ex. 1002, ¶¶ [0055], [0057], [0058].

76. A POSITA would understand that the "circuitry for wireless radio communication" claimed in the '120 Patent (Ex. 1001, claim 20, clause 4) could be implemented purely as hardware or as a combination of hardware and software. A POSITA would view the "wireless communication system 103" and "Bluetooth chipset" of Olodort as "circuitry for wireless radio communication," and would know how to incorporate, design, and program such circuitry to adapt them for a given application, such as in a wireless earbud.

77. The wireless communication system 103 of Olodort "is also coupled to a speaker 111 to provide an audio output to a user." Ex. 1002, ¶¶ [0055], [0057].

78. A POSITA would have been familiar with means for converting an audio signal transmitted wirelessly, such as over a Bluetooth® connection, into an audio signal for causing a speaker to produce audible sound. For example, a POSITA would have known of various audio codecs available at the time for

decoding an encoded audio signal capable of causing a speaker to provide audio output. A POSITA specifically would have known which codecs to use to convert a Bluetooth® audio stream into an audio signal for driving a speaker. It is my opinion that a POSITA would have understood the wireless communication system 103 of Olodort, and in particular the Bluetooth chipset of Olodort, to be "circuitry for … audio codec[2]," as claimed in claim 20, clause 4, of the '120 Patent.

79. Alternatively, a POSITA would have had reason to include circuitry for audio codec control, whether in pure hardware or in hardware and software form, in the wireless communication system 103 and Bluetooth chipset disclosed in Olodort. A POSITA would have known that doing so would have provided improved "acoustic quality" from a device having "expected growing popularity," as the '120 Patent acknowledges. *See* Ex. 1001, col. 1, lines 11–23. Thus, a POSITA would have been motivated based on their preexisting knowledge and experience, as well as incentives extant in the marketplace as of the Critical Date, to modify the earpieces of Olodort to have circuitry for audio codec control,

[2] The language of claim 20 is ambiguous as to whether the term "control" modifies all the functions listed for the circuitry. I believe a POSITA would read the term "control" as applying only to "earbud operation." If claim 20, clause 4, is interpreted to mean "circuitry for wireless radio communication control, audio codec control, and earbud operation control," a POSITA would nonetheless have had reason to provide such circuitry in view of the disclosure of Olodort alone, or Olodort in view of the POSITA's background knowledge.

should Olodort's disclosure of a wireless communication system 103 and Bluetooth chipset[3] be found insufficient to teach this limitation.

80. It is my opinion that a POSITA would have found it obvious to modify the wireless communication system 103 and Bluetooth chipset disclosed in Olodort to include circuitry for audio codecs, should such a modification even be necessary, because doing so would have involved incorporating known functionality into conventional hardware to achieve the predictable result of providing high-quality audio wirelessly.

81. Olodort states that its wireless communication system 103 is coupled to "one or more input controls such as an on/off button or volume buttons or an answer button, or a touchpad(s) etc." Ex. 1002, ¶¶ [0052], [0056]. A POSITA would believe that turning earbuds on and off, controlling volume, and answering calls are earbud operations. Therefore, a POSITA would understand the wireless communication system 103 of Olodort, with its responses to the coupled input controls, to be "circuitry for … earbud operation control," as claimed in claim 20, clause 4, of the '120 Patent.

---

[3] Regardless of my perspective on the intended meaning of the limitation, as of the Critical Date, the Bluetooth spec included v1.3 of the Advanced Audio Distribution Profile (https://www.bluetooth.org/docman/handlers/DownloadDoc.ashx?doc_id=260859 (Last Visited March 3, 2024), and dated July 24, 2012), which included support for the sink device (the earbuds) to advertise the codecs it supports and negotiate parameters with the source device. Thus, there was ample detail in the Bluetooth spec to teach this limitation.

82. A POSITA as of the Critical Date would have known of printed circuit boards (PCBs), would have known that PCBs are useful for supporting circuitry and routing signals among such circuitry, and would have known that PCBs had been used for those purposes for decades. A POSITA would have had reason to support the circuitry disclosed in Olodort on a PCB because doing so would have involved employing a well-known, conventional component for its standard purpose. Therefore, a POSITA would have been motivated to include a PCB, or to modify Olodort to include a PCB, in a manner resulting in the subject matter of claim 20, clause 4, of the ’120 Patent.

83. It is my opinion that a POSITA would have found it obvious to support the wireless communication system 103 and Bluetooth chipset, and other circuitry, disclosed in Olodort on a PCB, should such a modification even be necessary, because doing so would have involved using known hardware for its conventional purpose to achieve the predictable result of conveniently routing signals among the circuitry.

84. Olodort states, “The connection between USB interface circuitry 105 and the system 103 can be used by system 103 to cause it to enter a low power state when it determines that the USB interface, through conductors 107, has been coupled to a power source to charge battery 125.” Ex. 1002, ¶ [0055]. A POSITA would understand this functionality implemented in

the system 103 of Olodort to be circuitry configured for "detecting connection of said battery to a charger and in response entering the idle mode," as claimed in claim 20, clause 6, of the '120 Patent.

85. A POSITA would also understand that "existing connections to a second wireless earbud and to a wireless audio streaming host device will be disconnected," as claimed in claim 20, clause 6, of the '120 Patent, occurs in the low power state of Olodort. Olodort clarifies that its low power state "is a standby mode," and that exiting the standby mode involves the earpiece becoming "awakened." Ex. 1002, claim 38. A POSITA would understand those characteristics of the low power state taught in Olodort to mean that the earpieces are disconnected from one another and from any wireless audio streaming host device.

86. Alternatively, a POSITA would have been motivated based on their preexisting knowledge and experience, as well as incentives extant in the marketplace as of the Critical Date, to modify the earpieces of Olodort to have circuitry for disconnecting the earbuds from one another and from any wireless audio streaming host device when in the low power state, should Olodort's disclosure of the low power state be found insufficient to teach the limitations relating to disconnection required by claim 20, clause 6, of the '120 Patent. A POSITA would have known that doing so would have provided increased

"duration between battery chargings," which the '120 Patent states is known as an "[i]mportant characteristic[]" for such a device. *See* Ex. 1001, col. 1, lines 19–23.

87. It is my opinion that a POSITA would have found it obvious to program the wireless communication system 103 and Bluetooth chipset, and other circuitry, disclosed in Olodort to disconnect from any host device when entering, and in, the low power state, should such a modification even be necessary, because doing so would have involved using conventional programming techniques to achieve the predictable results of reducing power consumption and prolonging battery life.

88. Olodort discloses that its earpieces are configured to be used in a mono mode or in a stereo mode after being removed from the chambers of a charging case, which Olodort calls a "housing." Ex. 1002, claims 43, 50, 52. A POSITA would have understood this disclosure in Olodort to mean that circuitry of Olodort's earpieces is configured for "detecting disconnection of said battery from said charger and in response entering the operational mode," as claimed in claim 20, clause 7, of the '120 Patent.

89. Olodort states that its "earpieces are automatically switched to stereo mode" after both earpieces are removed from the charging case. Ex. 1002, claim 52. While the other earpiece remains in the charging case, that earpiece stays in the low power mode and the first earpiece is configured to be used in a mono

mode. Ex. 1002, claims 50, 52. A POSITA would have understood this operation to be the equivalent of circuitry configured for "detecting disconnection of said battery from said charger and in response … attempting a true wireless stereo, TWS, reconnection with the second wireless earbud; [and] if the attempt is successful, operating the wireless earbud as a TWS audio receiver and otherwise operating the wireless earbud as a mono wireless audio receiver," as claimed in claim 20, clauses 7 through 9, of the '120 Patent.

90. Even if Olodort's disclosure of removal from the charging case were considered insufficient to teach the above claim limitations, a POSITA would have been motivated to use disconnection from charging as one of the events prompting attempts to reconnect the earpieces to one another and enter mono or stereo modes. Olodort states that an earpiece's circuitry "cause[s] it to enter a low power state when it determines that the USB interface, through conductors 107, has been coupled to a power source to charge battery 125." Ex. 1002, ¶ [0055]. The earpieces of Olodort also include "charging circuitry" for charging the battery which is capable of controlling a "charge status LED 129" to "indicate the charge status of battery 125." Ex. 1002, ¶ [0055].

91. A POSITA would have inferred from Olodort's disclosure, and from their own knowledge and experience, that operation of its earpieces can change to a low power state responsive to connection to a charger, and that

disconnection from the charger could similarly prompt a change in operational state to the stereo or mono modes.

92. It is my opinion that a POSITA would have found it obvious to program the wireless communication system 103 and Bluetooth chipset, and other circuitry, disclosed in Olodort to exit the low power state and enter the stereo or mono modes responsive to disconnection from the charger, should such a modification even be necessary, because doing so would have involved using conventional programming techniques to achieve the predictable results of facilitating convenient and user-friendly establishment and re-establishment of wireless connections.

93. When in stereo mode, Olodort states that "each of the first earpiece and the second earpiece can be configured to act as master device and when one becomes the master device, the other earpiece will in response act as the slave device." Ex. 1002, Abstract, ¶¶ [0014], [0055], claims 42, 56, 59. A POSITA would understand circuitry for implementing these operations of Olodort to be circuitry configured for, "if operated as a TWS audio receiver, determining whether the wireless earbud is a master device or a slave device with respect to the second wireless earbud," as claimed in claim 20, clause 10, of the '120 Patent.

94. Still on the topic of operation in stereo mode, Olodort states that "each of the earpieces … can be configured to act as a master device to receive

wirelessly communication signals from a host device, … and to transmit wirelessly signals to the other earpiece which is configured to act as a slave device relative to the master device." Ex. 1002, Abstract, ¶¶ [0014], [0055], claims 42, 56, 59. A POSITA would understand the operation disclosed in Olodort to be the result of a successful attempt to reconnect the earpieces with the host device. Therefore, a POSITA would understand that the circuitry of Olodort is configured for, "if the wireless earbud is determined to be a master device, attempting to reconnect with the wireless audio streaming host device and other known wireless audio streaming host devices if applicable."

95. Any remaining limitations in claim 20 were known from Guccione. Guccione states, "If the phone is out of range or not available, the headset 10 will automatically enter a discoverable state." Ex. 1003, ¶ [0060]. A POSITA would understand that the foregoing operations of Guccione are implemented by circuitry configured for, "if reconnection with the wireless audio streaming host device fails, initiat[ing] a pairing procedure with the wireless audio streaming host device and other known wireless audio streaming host devices if applicable," as claimed in claim 20, clause 12, of the '120 Patent.

96. A POSITA would have been motivated to include circuitry to enable the initiation of a pairing procedure disclosed in Guccione, whether in hardware, software, or hardware and software form, because doing so would have

facilitated ease of connection and reconnection between an earbud and multiple audio gateway devices, as taught in Guccione. Ex. 1003, ¶¶ [0004], [0007], [0060].

97. It is my opinion that a POSITA would have found it obvious to program the wireless communication system 103 and Bluetooth chipset, and other circuitry, disclosed in Olodort to initiate a pairing procedure if an attempt to reconnect to a host device fails because doing so would have involved using conventional programming techniques to implement functionality known from at least Guccione to achieve the predictable results of facilitating convenient and user-friendly establishment and re-establishment of wireless connections.

98. In the event that Olodort's disclosure of successful signal transmission between earpieces and a host device is found to be insufficient to teach "attempting to reconnect," as claimed in claim 20, clause 11, Guccione teaches attempts at reconnection. After being powered on, Guccione states that its headset "will first attempt to reconnect to the last phone used (if any)." Ex. 1003 ¶¶ [0060], [0065]. A POSITA would have been motivated to incorporate circuitry for attempting to reconnect, as disclosed in Guccione, whether in hardware, software, or hardware and software form, into the circuitry of Olodort because a POSITA would have recognized that doing so would have made reconnection more "convenien[t] and user-friendl[y]," which the Background Section of

the ’120 Patent recognizes as “[i]mportant characteristics of wireless earbuds.” *See* Ex. 1003, ¶¶ [0032], [0051], [0060], [0065]; *see also* Ex. 1001; 1:19–23.

99. It is my opinion that a POSITA would have found it obvious to program the wireless communication system 103 and Bluetooth chipset, and other circuitry, disclosed in Olodort to attempt reconnection with a host device when an earpiece is selected as the master because doing so would have involved using conventional programming techniques to implement functionality known from at least Guccione to achieve the predictable results of enabling more convenient and user-friendly operation of the wireless earbuds.

B. The subject matter of dependent claim 21 would similarly have resulted from a POSITA combining the teachings of Olodort and Guccione.

100. The “wireless communication system 103” of Olodort “can be a Bluetooth chipset or can be a Bluetooth chipset and other components to provide other types of wireless communication such as WiFi, etc.” Ex. 1002 ¶¶ [0055], [0058]. A POSITA would understand the wireless communication system 103 and Bluetooth chipset of Olodort to be circuitry for wireless radio communication that “is compliant with one or more of Bluetooth, AirPlay, PlayFi, Miracast, WiDi, DLNA or Wi-Fi Direct,” as claimed in claim 21 of the ’120 Patent.

C. Should the disclosures of Olodort and Guccione be found insufficient to teach all the claim limitations, Yamashita compensates for any deficiencies.

101. Yamashita discloses devices for wirelessly facilitating audio reproduction, such as wireless headphones, "capable of automatically resuming playback of music and other content data interrupted by the disconnection of a wireless connection." Ex. 1005A, Abstract, ¶ [0007]. Regarding this functionality, Yamashita states that, "if … the reconnection processing unit 64 determines that the reconnection has succeeded or failed … the reconnection processing unit 64 reconnects to the audio player 10 again. At this time, …the reconnection process is repeated … until the reconnection is successful." Ex. 1005A, ¶ [0042]. A POSITA would consider the circuitry in the wireless headphones of Yamashita that enables the foregoing functionality to be circuitry configured for "attempting to reconnect with the wireless audio streaming host device and other known wireless audio streaming host devices if applicable," as claimed in claim 20, clause 11, of the '120 Patent.

102. A POSITA would have been motivated to modify the circuitry and/or earpieces of Olodort to exhibit the reconnection behaviors taught in Yamashita because doing so would have enabled automatic resumption of a wireless connection, as taught in Yamashita. *See* Ex. 1005A, ¶¶ [0049]. In addition, doing so would have reduced battery consumption, which is explicitly

taught in Yamashita as a beneficial effect of its techniques (*see* Ex. 1005A, ¶ [0043]), within the meaning of claim 20 because claim 20, clause 5, states that the functions in clauses 6 through 12 are performed "for automatic power preservation" and the function of at least clause 11 is the equivalent of what is disclosed in Yamashita.

103. It is my opinion that a POSITA would have found it obvious to program the wireless communication system 103 and Bluetooth chipset, and other circuitry, disclosed in Olodort to attempt reconnection with a host device when an earpiece is selected as the master because doing so would have involved using conventional programming techniques to implement functionality further known from Yamashita to achieve the predictable results of facilitating convenient and user-friendly establishment and re-establishment of wireless connections.

D. Should the disclosures of Olodort, Guccione, and Yamashita be found insufficient to teach all the claim limitations, the Bluetooth® Spec. 4.1 compensates for any deficiencies.

104. The Bluetooth® Spec. 4.1 discloses that Bluetooth® compliant devices can enter a "STANDBY state" and that "[i]n the STANDBY state, no connection has been established." Ex. 1006, pp. 161, 163, 172. A POSITA would understand the STANDBY state in the Bluetooth® Spec. 4.1 to be an "idle mode, wherein existing connections to a second wireless earbud and to a wireless audio

streaming host device will be disconnected," as claimed in claim 20, clause 6, of the '120 Patent.

105. A POSITA would have considered the "low power state" and "standby mode" taught in Olodort to be "idle mode[s]"[4] in which "existing connections to a second wireless earbud and to a wireless audio streaming host device will be disconnected" because the Bluetooth® Spec. 4.1 shows that a STANDBY state is such a mode.

106. In the alternative, a POSITA would have been motivated by the Bluetooth® Spec. 4.1 to change the "low power state" and "standby mode" taught in Olodort to be "idle mode[s]" in which "existing connections to a second wireless earbud and to a wireless audio streaming host device will be disconnected" because that is the solution taught in the Bluetooth® Spec. 4.1. *See* Ex. 1006, pp. 161, 163, 172. A POSITA would have recognized that doing so would increase the duration between battery chargings, which, as noted in the Background section of the '120 Patent, is an important characteristic of wireless earbuds. *See* Ex. 1001, 1:19–23.

[4] I note that a POSITA would understand the use of the term "idle mode" in claim 1 of the '120 patent as referring to the STANDBY state (Part B.8.2 of the Bluetooth® Spec. 4.1), in which no connection has been established, and the device may be in a lower-power mode.

107. It is my opinion that a POSITA would have found it obvious to program the wireless communication system 103 and Bluetooth chipset, and other circuitry, disclosed in Olodort to disconnect from any host device when entering, and in, the low power state because doing so would have involved using conventional programming techniques to implement functionality further known from the Bluetooth® Spec. 4.1 to achieve the predictable results of preserving power and prolonging battery life.

108. The Bluetooth® Spec. 4.1 also teaches multiple audio codecs usable for encoding and decoding audio signals in compliance with its standards. Ex. 1006, pp. 210–13. A POSITA would have considered the "wireless communication system 103" and "Bluetooth chipset" taught in Olodort to be "circuitry for … audio codec," as claimed in claim 20, clause 6, because the Bluetooth® Spec. 4.1 shows how such a Bluetooth chipset would have been capable of operating, including to control audio codecs, as discussed above regarding the interpretation of this claim language.

109. In the alternative, a POSITA would have been motivated to modify the earpieces of Olodort to have circuitry for audio codec control because doing so would have enabled wireless transmission of audio compliant with the Bluetooth® Spec. 4.1, which was "increasingly popular" according to the '120 Patent. Ex. 1001, 1:10–19.

110. It is my opinion that a POSITA would have found it obvious to program the wireless communication system 103 and Bluetooth chipset, and other circuitry, disclosed in Olodort to control audio codecs because doing so would have involved using conventional programming techniques to implement functionality further known from the Bluetooth® Spec. 4.1 to achieve the predictable result of providing high-quality audio wirelessly.

E. The modifications and combinations of the prior art required to arrive at the claimed subject matter would have resulted from the application of ordinary skill by a POSITA.

111. It is my opinion, based on my own knowledge and experience as well as my interactions with individuals having the qualifications of a POSITA on or shortly before the Critical Date, that the modifications and combinations of the prior art above were within the ability of a POSTIA as of the Critical Date.

112. The results of such modifications to and combinations of the prior art would have been predictable to a POSITA, given their own knowledge and experience, the information and suggestions contained explicitly in the prior art references, and the ordinary creativity that a POSITA can be expected to exercise.

113. The above modifications and combinations could have been accomplished by a POSITA reprogramming firmware controlling the devices shown in the prior art to have functionality also known in the prior art. A POSITA would have known how to implement these changes and combinations and would

have had the ability to predict how the changes and combinations would affect the operation of the resulting device.

VIII. LEGAL STANDARDS

A. Anticipation

114. I have been informed that a patent claim is invalid as being anticipated under 35 U.S.C. § 102 if each and every limitation of the claim, as properly construed, is disclosed either explicitly or inherently in a single prior art reference and such limitations are arranged or combined in the same way as claimed. Under the principles of inherency, if the prior art necessarily functions in accordance with, or includes the claimed limitations, it anticipates the claim.

115. I have been informed that a claim is invalid under 35 U.S.C. § 102(a)(1) if the claimed subject matter was patented, described in a printed publication, or in public use, on sale, or otherwise available to the public before the effective filing date of the claimed invention. I have also been informed that a claim is invalid under 35 U.S.C. § 102(a)(2) if the claimed invention was described in a patent issued under section 151, or in an application for patent published or deemed published under section 122(b), in which the patent or application, as the case may be, names another inventor and was effectively filed before the effective filing date of the claimed invention.

B. Obviousness

116. I have been informed that a patent claim is invalid under 35 U.S.C. § 103 in light of one or more prior art references if it would have been obvious to a POSITA, taking into account (1) the scope and content of the prior art, (2) the differences between the prior art and the claims, (3) the level of ordinary skill in the art, and (4) any so called "secondary considerations" of non-obviousness, which include: (i) "long felt need" for the claimed invention, (ii) commercial success attributable to the claimed invention, (iii) unexpected results of the claimed invention, and (iv) "copying" of the claimed invention by others. For purposes of my analysis above and because I know of no indication from the patent owner or others to the contrary, I have applied a date of September 5, 2014, as the earliest effective filing date of the claimed invention in my obviousness analyses, although in many cases the same analysis would hold true even at an earlier date than September 5, 2014.

117. I have been informed that a claim can be obvious in light of a single prior art reference or multiple prior art references. To be obvious in light of a single prior art reference or multiple prior art references, there must be a reason to modify the single prior art reference, or combine two or more references, in order to result in the claimed subject matter. This reason may come from a teaching, suggestion, or motivation to combine, or may come from the reference or

references themselves, the knowledge or "common sense" of a POSITA, or from the nature of the problem to be solved and may be explicit or implicit from the prior art as a whole. I have been informed that the combination of familiar elements according to known methods is likely to be obvious when it does no more than yield predictable results. I also understand it is improper to rely on hindsight in making the obviousness determination.

IX. CLOSING REMARKS

118. I currently hold the opinions expressed in this Declaration. I reserve the right to continue my analysis, and to supplement this Declaration should I acquire additional information and/or attain supplemental insights that may impact the analysis and my opinions.

119. I hereby declare that all statements made of my own knowledge are true and that all statements made on information and belief are believed to be true. I further declare that these statements were made with the knowledge that willful false statements and the like so made are punishable by fine or imprisonment, or both, under Section 1001 of the Title 18 of the United States Code.

Dated: March 6, 2025 By,

Jeremy Cooperstock

CURRICULUM VITAE

Jeremy R. Cooperstock

Version as of February 27, 2025

Contents

Biographical **3**
Personal Data . . . 3
Education . . . 3

Awards and Distinctions **3**

Work Experience **5**
Career Highlights . . . 5
Academic Experience . . . 7
Industrial and Consulting Experience . . . 8
Litigation and Expert Witness Experience . . . 9

Research Dissemination **13**
Journal Articles . . . 17
Refereed Conference Publications . . . 34
Book Chapters . . . 36
Other Refereed Contributions . . . 37
Non-refereed Contributions . . . 38
Patents . . . 39
Technology Transfer . . . 39
Research Demonstrations . . . 39
Invited Talks . . . 40
Media Exposure . . . 47

Research Supervision **50**
Research Professionals . . . 50
Post-doctoral Fellows . . . 52
Ph.D. Students . . . 54
Masters Students . . . 58

Funding **65**
Individual Research Grants and Contracts . . . 65
Team Research Grants and Contracts . . . 69
Centre Research Grants . . . 72

Teaching **74**
Courses Taught . . . 74
Undergraduate Supervision . . . 76

Service **86**
University Service 86
Professional Activities 88
Service to Society 92

Biographical

Personal Data

Nationality	Canadian
Languages	English, French and Hebrew
Address	Department of Electrical and Computer Engineering, McGill University 3480 University Street, Montreal, QC, H3A 0E9, Canada
Telephone	(514) 398-5992
email	jer@cim.mcgill.ca

Education

Ph.D.	Electrical and Computer Engineering, University of Toronto, 1996. Thesis: "Reactive Environments and Augmented Media Spaces." (Nominated for NSERC Doctoral Dissertation Award) Advisors: Prof. K.C. Smith and Prof. W. Buxton
M.Sc.	Computer Science, University of Toronto, 1992. Thesis: "Neural Network Operated Vision-Guided Mobile Robot Arm for Docking and Reaching." Advisor: Prof. E. Milios.
B.A.Sc.	Electrical Engineering, Computer Engineering Option, University of British Columbia, 1990 (Honours)

Awards and Distinctions

2024	Best Poster Award, "Investigating Haptic Co-Creation with Reinforcement Learning", Eurohaptics [CP1]
2024-2029	Werner Graupe Distinguished Chair in Automation Engineering, McGill University ($15,000 plus research stipend of $30,000 per annum)
2022	Honorable Mention, "The Sound of Hallucinations: Toward a more convincing emulation of internalized voices" (top 5% of papers), Human Factors in Computing Systems (CHI) [C5]
2022	Finalist, Best Applications Paper Award, "Speaking Haptically: from Phonemes to Phrases with a Mobile Haptic Communication System", Transactions on Haptics [J4]
2019	Honorable Mention, "Detecting Perception of Smartphone Notifications using Skin Conductance Responses" (top 5% of papers), Human Factors in Computing Systems (CHI) [C34]
2019	San Diego Opera, Opera Hack award, Hamsafar! ($10,000, with 5 co-awardees)
2018	Best poster presentation award, "Enhanced Pressure-Based Multimodal Immersive Experiences", Augmented Human [CP12]

2015	Gerald W. Farnell Teaching Scholar, Faculty of Engineering ($12,500)
2014	US Ignite Best App in Education, Augmented Reality for Improved Training of First Responders
2013	Canadian National Institute for the Blind, Hochhausen Access Technology Research Award ($10,000)
2013	Best paper award, "Vibrotactile Rendering of Splashing Fluids", Transactions on Haptics [J17]
2013	Best use of sound award, "The Walking Straight Mobile Application: Helping the Visually Impaired Avoid Veering, International Conference on Auditory Displays [C62]
2012	Mozilla Foundation and NSF Gold Prize in the Mozilla Ignite Challenge (out of 305 submissions in the Brainstorming Round) ($5,000) for Real-Time Emergency Response
2012	Canadian Internet Registry Association .CA Impact Award (Applications category) for In-Situ Audio Services Project ($5,000)
2011	Best paper award, "What's around me? Spatialized audio augmented reality for blind users with a smartphone", Mobile and Ubiquitous Systems [C73]
2010	Best paper award, "Design of a Vibrotactile Display via a Rigid Surface", Haptics Symposium [C82]
2009, 2010	Nominee, NSERC Brockhouse Canada Prize
2009	Best paper award, "SoundPark: Exploring Ubiquitous Computing through a Mixed Reality Multi-player Game Experiment", 9e Conférence Internationale sur Les NOuvelles TEchnologies de la REpartition [C92]
2005	ACM/IEEE Supercomputing, Most Innovative Use of New Technology for Wide Screen Window on the World: Life Size HD Videoconferencing
2001	Audio Engineering Society Citation Award for pioneering the technology enabling collaborative multichannel performance over the broadband internet

Work Experience

Career Highlights

Haptic Information Delivery (2018-2021) My lab's haptics research has resulted in prominent visibility in the preeminent journal, IEEE Transactions on Haptics, and the two top-tier international conferences in the field, IEEE Haptics Symposium and IEEE World Haptics Conference, with a dozen publications in these forums between 2020 and 2021. Given my recognition in the field, I was invited to serve on the editorial boards of all of these bodies, in addition to the specialty section on haptics of the Frontiers Journal in Virtual Reality. Specific examples of significant contributions include the performance attained through use of our two-actuator apparatus and phonemic encoding for tactile communication of natural language [C31, J4, C9], which outperformed the previously cited best results on this task, achieved by Facebook Research Labs. A second contribution relates to the high recognition rates we attained for multi-dimensional tacton delivery (3 parameters, each at 3 levels), targeting clinical patient-monitoring scenarios. This work inspired studies of wearable vibrotactile devices for physiological monitoring of patients [C30, C19]. While our results were achieved initially using a set of three actuators [C44, C41, C32, C22], we subsequently demonstrated equivalent recognition performance via only a single vibrotactile actuator, with a novel parameter encoding scheme [C21]. We further demonstrated achievement of the highest information transfer rates reported in the literature for such a single-actuator device [C16].

Physiological Sensing (2017-2020) Our research for detection of smartphone notifications was recognized by an Honourable Mention (top 5% of papers) from the top-tier ACM Conference on Human Factors in Computing ([C34]), and led to a recent patent filing ([P1]). This work has the potential to serve as not only for more intelligent, context-sensitive notification delivery, but also, as a tool that can be exploited to combat the prevalent and adverse effects of Internet addiction, driven largely by "fear of missing out."

Real-Time Emergency Response (rtER) (2012-2013) provides an envisionment of the future of next-generation 911 (NG-911) technologies, supporting enhanced situational awareness for first responders through the use of citizen-supplied smartphone video streams and other relevant data [J15]. Our work was recognized by the *Gold Prize* from the Mozilla Ignite Fund, featured on the web site of the White House Office of Science and Technology, and prompted the launch of a funding program by the U.S. Department of Justice.

Autour (2009-2018) is an "eyes-free" app for the blind, which provides a rich, spatialized audio representation of one's environment [J22, C73, C64, C61]. The project further motivated a rigorous analysis of smartphone sensor reliability, resulting in what was the first comprehensive examination of practical limits on smartphone sensors, including the problems of gyro drift [C64].

Mobile Treatment Device for Amblyopia (2009-2012, in collaboration with ophthalmologist R. Hess) is a patented prototype Mobile Treatment Device for Amblyopia [P10] ("lazy eye"). Initial trials [J21], based on the popular Tetris game, provided highly promising early results [J29, J24], not only restoring the use of both eyes in a majority of patients but even resulting in binocular (3D) depth perception in some. Most significantly, the treatment has been found to work successfully

on adult populations, whereas the prevailing wisdom had been that treatment was only possible on children. The technology has now been acquired by Novartis, who are commercializing the system.

Natural Interactive Walking (2008-2017) investigated multimodal interaction with virtual ground surfaces, resulting in important findings of tactile discrimination ability [J23] and the role of vibrotactile stimulation in perception of compliance [J30]. Our "Ecotile" prototype (patent [P7]) was showcased at numerous venues including SIGGRAPH, and led to related research involving limb modeling [C75, C59, C53], foot-water interaction [J17], and variable-friction walking interfaces [C69, C60, J8].

Ultra-Videoconferencing (2002-2006) is our low-latency, high-fidelity network transport, used for distance music teaching with Maestro Pinchas Zuckerman, cross-continental jazz jams, and remote sign language interpretation. The Globe and Mail described Cooperstock's 2001 demonstration as "a watershed event for the elite club of the world's computer network engineers." Ultra-Videoconferencing garnered my research group a prestigious Citation Award from the Audio Engineering Society and the Award for Most Innovative Use of New Technology from ACM/IEEE Supercomputing (2005). This research directly constituted the basis for subsequent funding of $2.2M from Valorisation Recherche Quebec and over $4M from Canarie, and influenced the designs of similar telepresence videoconferencing systems from Cisco, HP, and Polycom. Our follow-up work on **Open Orchestra** (with HQP N. Bouillot, A. Olmos, T. Knight, M. Tomiyoshi), resulted in an immersive simulator for orchestral training, used by professional and semi-professional musicians [J20].

Academic Experience

May 2024–present	**McGill University, Montreal, QC** Werner Graupe Distinguished Chair in Automation Engineering
Oct 2023–present	**McGill University, Montreal, QC** Associate Member, Biomedical Engineering
Dec 2022–present	**McGill University, Montreal, QC** Member, McGill Institute for Aerospace Engineering
May 2022–present	**McGill University, Montreal, QC** Member, International Laboratory on Learning Systems
Jan 2018–present	**McGill University, Montreal, QC** Full Professor, Electrical and Computer Engineering. Director, Shared Reality Lab Associate Member, Faculty of Music, Department of Theory Founding Member, Centre for Interdisciplinary Research in Music, Media and Technology Member, Centre for Intelligent Machines
Feb 2022–present	**York University, Ontario** Affiliate Member, Vision: Science to Applications (VISTA)
Sep 2018–Jun 2019	**Technion–Israel Institute of Technology, Haifa, Israel** Visiting Professor, Industrial Engineering and Management
Sep 2018–Jun 2019	**IDC, Herzliya, Israel** Visiting Professor, Department of Computer Science
May 2003–Dec 2017	**McGill University, Montreal, QC** Associate Professor, Electrical and Computer Engineering
Aug 2011–Jul 2012	**University of Auckland, New Zealand** Invited Professor, Department of Computer Science
May–June 2009	**Bang & Olufsen, Denmark** Visiting Professor, World Opera Project
Jan 2009–present	**Bielefeld University, Germany** Virtual Member, Center of Excellence Cognitive Interaction Technology (CITEC)
Feb 2008	**Arizona State University** Visiting Scholar, School of Arts, Media and Engineering
Sep 2004–Aug 2005	**Université de Paris VI, Paris France** Invited Professor, Laboratoire des Instruments et Systemes d'Ile-de-France
Nov 1997–May 2003	**McGill University, Montreal, QC** Assistant Professor, Electrical and Computer Engineering.

Industrial and Consulting Experience

Sep 2019–Oct 2021	**RedPill Canada VR, Montreal** Director and Advisor
Apr–Jun 2019	**(Confidential project as consulting expert)** Providing expert report on topics concerning Human-Computer Interaction.
Aug–Nov 2014	**Menya Solutions and DRDC-Valcartier** Providing expert advice related to human-computer interfaces, visualization, and collaboration.
Aug 2012	**Tamaggo Inc.** Provide guidance and advice on digital imagery
May 2012	**York University** Review draft application to Canada Excellence Research Chairs program
May 2002 –Nov 2003	**Solicitor General of Canada** Media streaming configuration and user interface design.
May 2001	**National Research Council** Instructor of short course in Soft Computing, Institut des Materiaux Industriels.
Jan–Sep 1999	**Audio Engineering Society** Technical leader of demonstration of multichannel and multimedia audio distribution
Jan–Aug 1999	**Ontario Science Center** Scientific Director of Timescape Millenium Exhibit
Jul 1998	**Nortel** Instructor of short course in videoconferencing systems for the Nortel International SL-1 User's Association (ILUA), Long Beach
Sep 1996–Oct 1997	**Sony Computer Science Laboratory** Visiting Researcher, Sony Computer Science Laboratory, Tokyo, Japan. Developed speech-interface controlled VCR with visual tape database functionality. Wrote two patent applications, one filed.
Jun–Aug 1990	**Fibronics Research** Visiting Researcher, Fibronics Advanced Research Center, Haifa, Israel. Developed and tested an FDDI-to-token ring bridge.
May–Aug 1989	**IBM T.J. Watson Research Center** Research Intern, IBM T.J. Watson Research Center, Yorktown Heights, NY. Improved implementation of a VLIW architecture simulator.

Litigation and Expert Witness Experience

Parties I represented are marked by an asterisk.

Jan 2025–ongoing	**Earin AB v. Skullcandy, Inc.*** Case No. 1:24-cv-00275-RGA and related *Inter Partes* Review proceedings
Jan 2025–ongoing	**Mullen Industries LLC v. Meta Platforms, Inc.*** Case No. 1:24-cv-00354 (W.D. Tex.) and related *Inter Partes* Review proceedings
Jul–Oct 2024	**Haptix Solutions LLC v. Microsoft Corp.*** IPR on U.S. Patent No. 8,253,686
Apr 2024–Jan 2025	**e-Vision Smart Optics* v. various parties** Litigation re U.S. Patent Nos. 8,708,483, 8,801,174, 8,905,541, 10,598,960, 10,613,355
Jan–Apr 2024	**Immersion Corp. v. Valve Corp.*** Case No. 2-23-cv-00712 (W.D. Wash.) related to U.S. Patent Nos. 7,336,260, 8,749,507, 9,430,042, 9,116,546, 10,627,907, 10,665,067, and 11,175,738
Nov 2023–ongoing	**Sitnet LLC v. Meta Platforms, Inc.*** United States District Court, S.D. New York, Case No. 1:23-cv-6389 (AS) and related *Inter Partes* Review proceedings of U.S. Patent Nos. 8,249,932, 8,332,454, 9,877,345, and 11,470,682. Deposition testimony on expert report
Aug 2023–ongoing	**NEC Corporation* v. Peloton Interactive, Inc. et al.** United States District Court, District of Delaware, Case No. 1:2022cv00987 and related *Inter Partes* Review proceedings of U.S. Patent Nos. 9,769,427 and 8,752,101. Deposition testimony on expert reports (3 depositions)
Aug 2023–ongoing	**Resonant Systems, Inc. d/b/a RevelHMI v. Samsung Electronics Co., Ltd.* et al.** United States District Court, Eastern District of Texas, Case No. 2:22-cv-00423-JRG
May 2023–Dec 2024	**LoganTree LP v. Fossil Group, Inc.*** United States District Court, District of Delaware Case No. 1:21-cv-00385-JDW and related *Inter Partes* Review proceedings. Deposition testimony on expert reports (2 depositions)b
Feb–May 2023	**Immersion Corp. v. Meta Platforms, Inc.*** United States District Court, Western District of Texas Case No. 6:22-cv-00541-ADA and related *Inter Partes* Review proceedings of U.S. Patent Nos. 8,469,806, 8,896,524, 9,727,217, 10,248,298, 10,269,222, and 10,664,143

Feb–May 2023	**Playvuu, Inc. v. Snap Inc.*** United States District Court, Central District of California Case No. 2:22-cv-06019. Involved in litigation matters related to U.S. Patent No. 10,931,911.
Sep 2022	**Apple* v. Taction Technologies, Inc.** Retained for *Reexamination Requests* of U.S. Patent Nos. 10,659,885 and 10,820,117 in the United States Patent and Trademark Office.
Aug 2022–Jun 2024	**Westwood One, LLC v. Local Radio Networks, LLC*** United States District Court, Northern District of Indiana, Case No. 1:21-cv-00088-HAB-SLC. Involved in litigation matters related to U.S. Patent Nos. 7,412,203 and 7,860,448
Jan–May 2022	**Peloton Interactive v. iFIT Inc. f/k/a ICON Health & Fitness*** United States District Court, District of Delaware, Civil Action No. 20-cv-1386-RGA. Prepared reports on patent invalidity and non-infringement.
Sep 2021–ongoing	**Brazos* v. Google** United States District Court, Western District of Texas Waco Division, Case Nos. 6:20-CV-00571-ADA through 6:20-CV-00585-ADA. Deposition testimony on expert reports (2 depositions)
Sep 2021–Aug 2022	**Allstate Insurance Co. v. Atos LLC*** Involved in *Inter Partes* Review, IPR2021-01118, of U.S. Patent No. 8,527,140, covering smartphone-based vehicle operation detection. Deposition testimony on expert report.
Jan 2021–Apr 2022	**GUI Global Products, Ltd. v. Apple*** United States District Court, Southern District of Texas, Case No. 4:20-cv-2652 and *Inter Partes* Review of U.S. Patent Nos. 10,259,020, 10,259,021, 10,562,077, and 10,589,320 in the United States Patent and Trademark Office. Deposition testimony on expert reports (2 depositions)
Dec 2020–Feb 2021	**Expert consultation re possible litigation in IT-related matter** Work done on behalf of Sheridan Ross P.C.
Nov 2020–Jun 2022	**Koss v. Apple*** United States District Court, Western District of Texas Civil Action No. 6:20-cv-00665. Involved in *Inter Partes* Review of U.S. Patent Nos. 10,206,025, 10,469,934, 10,506,325, 10,491,982, and 10,298,451 before the United States Patent and Trademark Office. Deposition testimony on expert reports (4 depositions).
Oct 2020–Oct 2021	**Triller v. ByteDance* and TikTok*** *Inter Partes* Review of U.S. Patent No. 9,691,429 before the United States Patent and Trademark Office. Deposition testimony on expert report.

Sep 2020–Jan 2023	**Content Square v. Quantum Metric*** **and Decibel Insight*** United States District Court, Massachusetts District Court, Case No. 1-20-cv-11184 and Delaware District Court, Case No. 20-cv-00832. Involved in invalidity arguments and petitions for *Inter Partes* Review. Deposition testimony on expert reports (5 depositions).
Sep 2020	**Wiesel v. Apple*** United States District Court, Eastern District of New York, Case No. 1:19-cv-7261. Engaged for source code review of products related to the Apple Watch (case presently stayed).
Aug–Oct 2020	**Finish Time* v. Garmin** United States District Court, District of Maine, Case No. 2:20-cv-00184. Involved in review of infringement arguments, discovery, related to fitness applications.
Dec 2019–Nov 2022	**Pinn v. Apple*** United States District Court, Central District of California, Case No. 8:19-cv1805, *Inter Partes* Review IPR2020-00999, Post Grant Review PGR2020-00066 and PGR2020-00073. Involved in preparation of expert witness declarations, code analysis involving multiple products related to earbuds and charging circuitry. Deposition testimony on expert reports, in-court trial testimony.
Oct 2019	**Qualcomm v. Apple*** *Inter Partes* Review, IPR2018-01279. Deposition testimony on expert witness declaration related to multimedia messaging.
Mar 2019–Feb 2022	**Cruz Hernandez* v. Air Canada and Lufthansa** Canadian Transportation Agency Case no. 20-01712, Petitioner before the Agency regarding passengers' rights to compensation under EC 261/2014
May 2018–May 2019	**Immersion Incorporated v. Samsung Inc.*** Civil Action No. 2:18-cv-00055 in the Eastern District of Texas and *Inter Partes* Review, IPR2018-01499. Consulted on technical details and involved in preparation of two expert witness declarations related to haptic feedback effects and force feedback in a multimodal system. (Patent Nos. 6,429,846, 7,969,288, 7,982,720, 8,031,181, 9,323,332 and 8,619,051)
May 2016–Nov 2017	**Cooperstock* v. Air Canada** Petitioner before the Canadian Transportation Agency. Brought successful complaint against Air Canada for the airline's making false or misleading statements to the public, Decision No. 105-C-A-2017 (otc-cta.gc.ca/eng/ruling/105-c-a-2017)
Jan–May 2014	**St. Lewis v. Rancourt*** Provided expert report on web server location, Ontario Superior Court File No. 11-51657

Mar–Sep 2013	**Cooperstock* v. United Airlines** Brought and argued successful appeal regarding anti-SLAPP legislation before the Quebec Court of Appeal, Decision 2013 QCCA 1670 (goo.gl/pgz301). Argued appeal in person (September 26, 2013)
Nov 2012–Aug 2017	**United Airlines v. Cooperstock*** Pro se litigant, Federal Court File No. T-2084-12. Deposition as litigant (August 2013) and testified at trial (December 2016).
Nov 2012–Jan 2017	**United Airlines v. Cooperstock*** Pro se litigant, Quebec Superior Court File No. 500-17-074743-124. Deposition as litigant (October 2014) and testified at trial (April 2016).
Sep 2012	**Lukács* v. Air Canada** Provided expert report on database query and execution times, Canadian Transportation Agency File No. M4120-3/11-06673, Decision No. 204-C-A-2013
May 2007–Jan 2008	**Market Maker c. Brim Solutions*** Provided expert witness report and in-court testimony (October 2007) on software-related intellectual property case. Quebec Superior Court File No. 500-17-036750-076.
Feb–Oct 2004	**Crawford Adjusters Canada** Provided analysis of artifacts in high definition video
Jul 2002–May 2016	**Court of Quebec, Small Claims Division** Brought 14 consumer rights complaints before the Court, 11 of which were successful

Research Dissemination

Notes on publication strategy: In my research field, papers in the ACM CHI (H5-index=87), UIST (H5-index=46), DIS (H5-index=33), and Mobile HCI (H5-index=28) conferences are considered to be top-tier, archival publications, competitive with the top HCI journals in terms of impact and visibility. Overall acceptance rates for these conferences are typically in the 20-25% range. As a measure of research impact, my publications have garnered ∼5800 *citations to date (Google Scholar) with more one third since 2019, an h-index of 39, and i10-index of 115. HQP under my supervision (names in bold) are typically given first authorship on co-authored work.*

Articles in Refereed Publications

[J1] **A. Talhan**, **Y. Yoo**, and J. R. Cooperstock. "Soft Pneumatic Haptic Wearable to Create the Illusion of Human Touch." In: *IEEE Transactions on Haptics* 17.2 (June 2024), pp. 177–190. DOI: 10.1109/TOH.2023.3305495. URL: https://ieeexplore.ieee.org/document/10219022.

[J2] **J. Regimbal**, **J. R. Blum**, **C. Kuo**, and J. R. Cooperstock. "IMAGE: An Open-Source, Extensible Framework for Deploying Accessible Audio and Haptic Renderings of Web Graphics." In: *ACM Transactions on Accessible Computing* (2024). DOI: 10.1145/3665223. URL: https://dl.acm.org/doi/10.1145/3665223.

[J3] **N. Duarte**, R. K. Arora, G. Bennett, M. Wang, M. P. Snyder, J. R. Cooperstock, and C. E. Wagner. "Deploying wearable sensors for pandemic mitigation: a counterfactual modelling study of Canada's second COVID-19 wave." In: *PLOS Digital Health* PDIG-D-22-00126R1 (Sept. 2022). DOI: 10.1371/journal.pdig.0000100. URL: https://journals.plos.org/digitalhealth/article?id=10.1371/journal.pdig.0000100.

[J4] **M. F. de Vargas**, **D. Marino**, **A. Weill–Duflos**, and J. R. Cooperstock. "Speaking Haptically: from Phonemes to Phrases with a Mobile Haptic Communication System." In: *Transactions on Haptics* 14.3 (July 2021), pp. 479–490. DOI: 10.1109/TOH.2021.3054812. URL: https://ieeexplore.ieee.org/document/9337220. Finalist, Best Applications Paper Award.

[J5] **P. Vyas**, **F. Al-Taha**, **J. R. Blum**, **A. Weill–Duflos**, and J. R. Cooperstock. "Ten Little Fingers, Ten Little Toes: Can Toes Match Fingers for Haptic Discrimination?" In: *Transactions on Haptics* 13.1 (2020). DOI: 10.1109/TOH.2020.2966969. URL: https://ieeexplore.ieee.org/document/8960637. Also presented at Haptics Symposium 2020.

[J6] **E. Sulmont**, E. Patitsas, and J. R. Cooperstock. "What Is Hard About Teaching Machine Learning to Non-Majors? Insights From Classifying Instructors' Learning Goals." In: *Transactions on Computing Education, Special Issue on Machine Learning Education* 19.4 (Aug. 2019). DOI: 10.1145/3336124. URL: http://dl.acm.org/authorize?N682238.

[J7] **J. Blum**, **P. Fortin**, **F. Al-Taha**, **P. Alirezaee**, **M. Demers**, **A. Weill–Duflos**, and J. R. Cooperstock. "Getting Your Hands Dirty Outside the Lab: A Practical Primer for Conducting Wearable Vibrotactile Haptics Research." In: *IEEE Transactions on Haptics, Special Issue on Wearable and Hand-held Haptics* 12.3 (July 2019), pp. 232–246. DOI: 10.1109/TOH.2019.2930608. URL: https://ieeexplore.ieee.org/document/8770138.

[J8] **G. Millet**, **M. Otis**, **D. Horodniczy**, and J. R. Cooperstock. "Design of Variable-Friction Devices for Shoe-Floor Contact." In: *Mechatronics* 46 (2017), pp. 115–125. DOI: 10.1016/j.mechatronics.2017.07.005. URL: https://www.sciencedirect.com/science/article/abs/pii/S0957415817301034.

[J9] **P. Fortin** and J. R. Cooperstock. "Laughter and Tickles: Toward Novel Approaches for Emotion and Behavior Elicitation." In: *IEEE Transactions on Affective Computing* 8.4 (2017). TAFFCSI-2016-07-0124.R1, pp. 508–521. DOI: 10.1109/TAFFC.2017.2757491. URL: http://ieeexplore.ieee.org/document/8052511/.

[J10] E. Aguilera, J. J. Lopez, and J. R. Cooperstock. "Spatial Audio for Audioconferencing in Mobile Devices: Investigating the Importance of Virtual Mobility and Private Communication and Optimizations." In: *Journal of the Audio Engineering Society* 64.5 (May 2016), pp. 332–341. DOI: 10.17743/jaes.2016.0009. URL: http://www.aes.org/e-lib/browse.cfm?elib=18138.

[J11] **D. El-Shimy** and J. R. Cooperstock. "User-Driven Techniques for the Design and Evaluation of New Musical Interfaces." In: *Computer Music Journal* 40.2 (2016), pp. 35–46. DOI: 10.1162/COMJ_a_00357. URL: http://www.mitpressjournals.org/doi/pdf/10.1162/COMJ_a_00357.

[J12] **F. Tordini**, A. Bregman, and J. R. Cooperstock. "Prioritizing foreground selection of natural chirp sounds by tempo and spectral centroid." In: *Multimodal User Interfaces, Special Issue on Auditory Display* 10.3 (Sept. 2016). Ed. by B. Katz and G. Marentakis, pp. 221–234. DOI: 10.1007/s12193-016-0223-x. URL: http://link.springer.com/article/10.1007%2Fs12193-016-0223-x.

[J13] R. F. Hess, **L. To**, J. Zhou, **G. Wang**, and J. Cooperstock. "3D Vision: the haves and havenots." In: *i-Perception* 6.3 (July 2015). DOI: 10.1177/2041669515593028. URL: http://ipe.sagepub.com/content/6/3/2041669515593028.full.pdf+html.

[J14] **N. Hieda** and J. R. Cooperstock. "Digital Facial Augmentation for Interactive Entertainment." In: *EAI Endorsed Transactions on e-Learning* 15.8 (Aug. 2015). DOI: 10.4108/icst.intetain.2015.259444. URL: https://eudl.eu/doi/10.4108/icst.intetain.2015.259444.

[J15] **J. Blum**, **A. Eichhorn**, **S. Smith**, **M. Sterle-Contala**, and J. R. Cooperstock. "Real-Time Emergency Response: Improved Management of Real-Time Information During Crisis Situations." In: *Multimodal User Interfaces* 8.2 (July 2014). JMUI-D-13-00047R3, pp. 161–173. DOI: 10.1007/s12193-013-0139-7. URL: https://link.springer.com/article/10.1007/s12193-013-0139-7.

[J16] **D. Dansereau**, N. Brock, and J. R. Cooperstock. "A Particle Filter for Predicting an Orchestral Conductor's Baton Movements." In: *Computer Music J.* 37.2 (Apr. 2013), pp. 28–45. URL: http://www.mitpressjournals.org/doi/pdf/10.1162/COMJ_a_00173.

[J17] **G. Cirio**, M. Marchal, A. Lécuyer, and J. R. Cooperstock. "Vibrotactile Rendering of Splashing Fluids." In: *Transactions on Haptics* 6.1 (May 2013), pp. 117–122. URL: http://ieeexplore.ieee.org/xpls/abs_all.jsp?arnumber=6226398. Best paper award.

[J18] F. Grond, **A. Olmos**, and J. Cooperstock. "Making Sculptures Audible through Participatory Sound Design (Artists' statement)." In: *Leonardo Music J.* 23 (Dec. 2013), pp. 12–13. DOI: doi:10.1162/LMJ_a_00140. URL: https://srl.mcgill.ca/publications/2013-LEONARDO.pdf.

[J19] **S. Pelletier** and J. R. Cooperstock. "Real-time free viewpoint video from a range sensor and color cameras." In: *Machine Vision and Applications* 24.4 (May 2013), pp. 739–751. URL: http://link.springer.com/article/10.1007%2Fs00138-012-0428-2.

[J20] **A. Olmos**, **N. Bouillot**, **T. Knight**, **N. Mabire**, **J.Redel**, and J. R. Cooperstock. "A High-Fidelity Orchestra Simulator for Individual Musicians' Practice." In: *Computer Music Journal* 36.2 (2012), pp. 55–73. URL: http://www.mitpressjournals.org/doi/pdf/10.1162/COMJ_a_00119.

[J21] J. M. Black, R. F. Hess, J. R. Cooperstock, **L. To**, and B. Thompson. "The measurement and treatment of suppression in amblyopia." In: *Visualized Experiments* 14.70 (Dec. 2012). DOI: 10.3791/3927. URL: http://www.jove.com/video/3927/the-measurement-and-treatment-of-suppression-in-amblyopia.

[J22] **D. El-Shimy**, F. Grond, **A. Olmos**, and J. R. Cooperstock. "Eyes-Free Environmental Awareness for Navigation." In: *Multimodal User Interfaces, Special Issue on Interactive Sonification* 5.3-4 (2012), pp. 131–141. DOI: 10.1007/s12193-011-0065-5. URL: http://www.springerlink.com/content/857h542884084ql2/.

[J23] B. L. Giordano, **Y. Visell**, H. Yao, V. Hayward, J. R. Cooperstock, and S. McAdams. "Identification of walked-upon materials in auditory, kinesthetic, haptic and audio-haptic conditions." In: *Acoustical Society of America* 131.5 (May 2012). URL: https://srl.mcgill.ca/publications/2012-JASA.pdf.

[J24] R. F. Hess, B. Thompson, J. M. Black, G. Maehara, P. Zhang, W. R. Bobier, **L. To**, and J. R. Cooperstock. "An iPod treatment for amblyopia: An updated binocular approach." In: *Optometry* 83.2 (Feb. 2012), pp. 87–94. URL: http://www.ncbi.nlm.nih.gov/pubmed/23231369.

[J25] **J. Blum**, **M. Bouchard**, and J. R. Cooperstock. "Spatialized audio environmental awareness for blind users with a smartphone." In: *Mobile Networks and Applications* 18.3 (Dec. 2012), pp. 295–309. DOI: 10.1007/s11036-012-0425-8. URL: https://srl.mcgill.ca/publications/2012-MONET.pdf.

[J26] **S. Pelletier** and J. R. Cooperstock. "Preconditioning for Edge-Preserving Image Super-Resolution." In: *IEEE Transactions on Image Processing* 21.1 (June 2012), pp. 67–79. URL: http://ieeexplore.ieee.org/stamp/stamp.jsp?tp=&arnumber=5898412.

[J27] **Z. Qi** and J. R. Cooperstock. "Toward Dynamic Image Mosaic Generation With Robustness to Parallax." In: *IEEE Transactions on Image Processing* 21.1 (Jan. 2012), pp. 366–378. URL: http://ieeexplore.ieee.org/stamp/stamp.jsp?tp=&arnumber=5959979.

[J28] J. R. Cooperstock. "Multimodal Telepresence Systems: Supporting Demanding Collaborative Human Activities." In: *IEEE Signal Processing* 28.1 (Jan. 2011). special issue on Immersive Communications, pp. 77–86. DOI: 10.1109/MSP.2010.939040.

[J29] **L. To**, B. Thompson, **J.R. Blum**, G. Maehara, R. Hess, and J. R. Cooperstock. "A game platform for treatment of amblyopia." In: *IEEE Transactions on Neural Systems and Rehabilitation Engineering* 19.3 (Feb. 2011), pp. 280–289. URL: http://ieeexplore.ieee.org/stamp/stamp.jsp?tp=&arnumber=5713843.

[J30] **Y. Visell**, B. Giordano, **G. Millet**, and J. R. Cooperstock. "Vibration Influences Haptic Perception of Surface Compliance During Walking." In: *PLoS ONE* 6.3:e17697 (Mar. 2011). DOI: doi:10.1371/journal.pone.0017697. URL: http://dx.plos.org/10.1371/journal.pone.0017697.

[J31] **R. Pellerin**, **N. Bouillot**, **T. Pietkiewicz**, M. Wozniewski, Z. Settel, E. Gressier-Soudan, and J. R. Cooperstock. "SoundPark: Exploring Ubiquitous Computing through a Mixed Reality Multi-player Game Experiment." In: *Studia Informatica Universalis* 8.3 (2010). Special Issue: Best Papers from NOTERE 2009, 21 pages. URL: https://srl.mcgill.ca/publications/2009-NOTERE.pdf.

[J32] R. H. Ellaway, D. Topps, K. Lachapelle, and J. R. Cooperstock. "Integrating Simulation Devices and Systems." In: *Studies in Health Technology and Informatics* 142 (Jan. 2009). Ed. by J. D. Westwood, S. W. Westwood, R. S. Haluck, H. M. Hoffman, G. T. Mogel, R. Phillips, R. A. Robb, and K. G. Vosburgh, pp. 88–90. URL: https://srl.mcgill.ca/publications/2009-MMVR-Ellaway.pdf.

[J33] **G. Wang**, L. Mercier, D. L. Collins, and J. R. Cooperstock. "A Comparative Study of Monoscopic and Stereoscopic Display for a Probe-Positioning Task." In: *Studies in Health Technology and Informatics* 142 (Jan. 2009). Ed. by J. D. Westwood, S. W. Westwood, R. S. Haluck, H. M. Hoffman, G. T. Mogel, R. Phillips, R. A. Robb, and K. G. Vosburgh, pp. 417–419. URL: https://srl.mcgill.ca/publications/2009-MMVR-Wang.pdf.

[J34] V. N. Salimpoor, **M. Benovoy**, G. Longo, J. R. Cooperstock, and R. J. Zatorre. "The Rewarding Aspects of Music Listening are Related to Degree of Emotional Arousal." In: *PLoS ONE* 4.10:e7487 (2009). DOI: 10.1371/journal.pone.0007487. URL: http://dx.plos.org/10.1371/journal.pone.0007487.

[J35] **Y. Visell**, **A. Law**, and J. R. Cooperstock. "Touch Is Everywhere: Floor Surfaces as Ambient Haptic Interfaces." In: *IEEE Transactions on Haptics* 2.3 (July 2009), pp. 148–159. DOI: 10.1109/TOH.2009.31. URL: http://ieeexplore.ieee.org/xpls/abs_all.jsp?arnumber=5166445.

[J36] **W. Sun** and J. R. Cooperstock. "An Empirical Evaluation of Factors Influencing Camera Calibration Accuracy Using Three Publicly Available Techniques." In: *Machine Vision and Applications Journal* 17.1 (Feb. 2006), pp. 51–67. DOI: 10.1007/s00138-006-0014-6. URL: http://www.springerlink.com/content/5824738r1w66v6wl/.

[J37] W. Woszczyk, J. R. Cooperstock, J. Roston, and W. Martens. "Shake, Rattle and Roll: Getting Immersed in Multisensory, Interactive Music via Broadband Networks." In: *Journal of the Audio Engineering Society* 53.4 (Apr. 2005), pp. 336–344. URL: http://www.aes.org/e-lib/browse.cfm?elib=13416.

[J38] **J. Yin** and J. R. Cooperstock. "Color Correction Methods with Applications to Digital Projection Environments." In: *Journal of Winter School of Computer Graphics* 12.3 (2004), pp. 499–506. URL: https://srl.mcgill.ca/publications/2004-WSCG-color.pdf.

[J39] L. R. Winer and J. R. Cooperstock. "The "Intelligent Classroom": Changing teaching and learning with an evolving technological environment." In: *Journal of Computers and Education* 38 (2002), pp. 253–266. URL: https://srl.mcgill.ca/publications/2002-CAE.pdf.

[J40] **A. Xu**, W. Woszczyk, Z. Settel, B. Pennycook, R. Rowe, P. Galanter, J. Bary, G. Martin, J. Corey, and J. R. Cooperstock. "Real-Time Streaming of Multichannel Audio Data over Internet." In: *Journal of the Audio Engineering Society* 48.7/8 (July 2000), pp. 627–641. URL: https://srl.mcgill.ca/publications/2000-JAES.pdf.

[J41] J. R. Cooperstock, S. S. Fels, W. Buxton, and K. C. Smith. "Reactive Environments: Throwing Away Your Keyboard and Mouse." In: *Communications of the ACM* 40.9 (Sept. 1997), pp. 65–73. URL: http://dl.acm.org/authorize?N06288.

[J42] J. R. Cooperstock and E. Milios. "Self-supervised learning for docking and target reaching." In: *Journal of Robotics and Autonomous Systems* 11 (1993), pp. 243–260. DOI: 10.1016/0921-8890(93)90029-C. URL: https://srl.mcgill.ca/publications/1993-JRAS.pdf.

Refereed Conference Publications

[C1] **D. Marino**, J. Dai, **P. Fortin**, **M. Henry**, and J. R. Cooperstock. "Co-Here: an expressive videconferencing module for implicit affective interaction." In: *Graphics Interface*. Halifax, NS: ACM, June 2024. URL: https://openreview.net/forum?id=L90yPA3fzE.

[C2] **E. Bouzekri**, P. Fortin, and J. R. Cooperstock. "ChatGPT, Tell Me More About Pilots' Opinion on Automation." In: *Cognitive and Computational Aspects of Situation Management (CogSIMA)*. Montreal, Canada: IEEE, May 2024. DOI: 10.1109/CogSIMA61085.2024.10553726. URL: https://ieeexplore.ieee.org/document/10553726.

[C3] **D. Marino**, **M. Henry**, **P. Fortin**, **R. Bhayana**, and J. R. Cooperstock. "I See What You're Hearing: Facilitating The Effect of Environment on Perceived Emotion While Teleconferencing." In: *Computer-Supported Cooperative Work and Social Computing*. Minneapolis, MN: ACM, Oct. 2023. DOI: 10.1145/3579495. URL: https://dl.acm.org/doi/10.1145/3579495.

[C4] **M. F. de Vargas**, **D. Marino**, **A. Weill–Duflos**, and J. R. Cooperstock. "Training to understand complex haptic phrases: a longitudinal investigation." In: *World Haptics Conference*. Delft, Netherlands: IEEE, July 2023. DOI: 10.1109/WHC56415.2023.10224492. URL: https://ieeexplore.ieee.org/document/10224492.

[C5] **H. Lee**, **R. Jiang**, **Y. Yoo**, **M. Henry**, and J. R. Cooperstock. "The Sound of Hallucinations: Toward a more convincing emulation of internalized voices." In: *Human Factors in Computing Systems (CHI)*. New Orleans, LA: ACM, Apr. 2022. DOI: 10.1145/3491102.3501871. URL: https://dl.acm.org/doi/10.1145/3491102.3501871. Honorable Mention.

[C6] **J. Regimbal**, **J. R. Blum**, and J. R. Cooperstock. "IMAGE: A Deployment Framework for Creating Multimodal Experiences of Web Graphics." In: *Web4All 2022 - Accessibility in a Hybrid World*. virtual event, Apr. 2022. DOI: 10.1145/3493612.3520460. URL: https://dl.acm.org/doi/pdf/10.1145/3493612.3520460.

[C7] **P. Fortin** and J. R. Cooperstock. "Understanding Smartphone Notifications' Activity Disruption via In Situ Wrist Motion Monitoring." In: *Human Factors in Computing Systems (CHI), Late-Breaking Work (LBW) track*. New Orleans, LA: ACM, Apr. 2022. DOI: 10.1145/3491101.3519695. URL: https://dl.acm.org/doi/10.1145/3491101.3519695. acceptance rate: 36.1%.

[C8] **A. Rai**, **C. Ducher**, and J. R. Cooperstock. "Improved Attribute Manipulation in the Latent Space of StyleGAN for Semantic Face Editing." In: *International Conference on Machine Learning and Applications*. virtually online, Dec. 2021. DOI: 10.1109/ICMLA52953.2021.00014. URL: https://ieeexplore.ieee.org/document/9680017.

[C9] **D. Marino**, **M. F. de Vargas**, **A. Weill–Duflos**, and J. R. Cooperstock. "Conversing Using WhatsHap: a Phoneme Based Vibrotactile Messaging Platform." In: *World Haptics Conference*. Virtual Conference: IEEE, July 2021. DOI: 10.1109/WHC49131.2021.9517186. URL: https://ieeexplore.ieee.org/document/9517186. Acceptance rate: 55.7%.

[C10] **E. Waite**, **T. Fitz-Gerald**, **A. Sadaqa**, **Huaijin Shi**, **Pascal Fortin**, **A. Weill–Duflos**, and J. R. Cooperstock. "3D Printed Tactile Illusions and Demonstrations." In: *World Haptics Conference, Work in Progress Paper*. Virtual Conference: IEEE, July 2021. DOI: 10.1109/WHC49131.2021.9517237. URL: https://ieeexplore.ieee.org/document/9517237.

[C11] **M. Demers**, **P. Fortin**, **A. Weill–Duflos**, **Y. Yoo**, and J. R. Cooperstock. "Active Sampling for Efficient Subjective Evaluation of Tactons at Scale." In: *World Haptics Conference*. Virtual Conference: IEEE, July 2021. DOI: 10.1109/WHC49131.2021.9517257. URL: https://ieeexplore.ieee.org/document/9517257. Acceptance rate: 55.7%.

[C12] K. E. MacLean, V. Levesque, O. Schneider, P. Irani, A. Weill–Duflos, and J. R. Cooperstock. "CanHap 501: Learning Haptic UX Design in Remote Teams." In: *World Haptics Conference, Work in Progress Paper*. Virtual Conference: IEEE, July 2021. DOI: 10.1109/WHC49131.2021.9517152. URL: https://ieeexplore.ieee.org/document/9517152.

[C13] **N. J. A. Pollet**, **E. Uzan**, **P. B. Ruivo**, **T. Abravanel**, **A. Talhan**, **Y. Yoo**, and J. R. Cooperstock. "Multimodal Haptic Armrest for Immersive 4D Experiences." In: *World Haptics Conference, Work in Progress Paper*. Virtual Conference: IEEE, July 2021. DOI: 10.1109/WHC49131.2021.9517151. URL: https://ieeexplore.ieee.org/document/9517151.

[C14] **Y. Li**, **Y. Yoo**, **A. Weill–Duflos**, and J. R. Cooperstock. "Context-aware Automatic Haptic Effect Generation Algorithm for Improved Content Viewing Experience." In: *World Haptics Conference, Work in Progress Paper*. Virtual Conference: IEEE, July 2021. DOI: 10.1109/WHC49131.2021.9517148. URL: https://ieeexplore.ieee.org/document/9517148.

[C15] **Y. Li**, **Y. Yoo**, **A. Weill–Duflos**, and J. R. Cooperstock. "Towards Context-aware Automatic Haptic Effect Generation for Home Theatre Environments." In: *Virtual Reality Software and Technology*. Osaka, Japan: ACM, Dec. 2021. DOI: 10.1145/3489849.3489887. URL: https://dl.acm.org/doi/10.1145/3489849.3489887. Acceptance rate 26%.

[C16] **Y. Yoo**, **J. Regimbal**, and J. R. Cooperstock. "Identification and Information Transfer of Multidimensional Tactons Presented by a Single Vibrotactile Actuator." In: *World Haptics Conference*. Virtual Conference: IEEE, July 2021. DOI: 10.1109/WHC49131.2021.9517169. URL: https://ieeexplore.ieee.org/document/9517169. Acceptance rate: 55.7%.

[C17] **A. Weill–Duflos**, **P. Fortin**, **F. Al-Taha**, and J. R. Cooperstock. "Haptic Augmentation of Audio and its Effects on Speech Perception." In: *International Workshop on Haptic and Audio Interaction Design*. Montreal, Canada, June 2020. URL: https://hal.archives-ouvertes.fr/hal-02901210.

[C18] A. Farooq, H. Tan, **A. Weill–Duflos**, J. R. Cooperstock, and R. Raisamo. "Embedded Haptic Waveguides to Improve Tactile Feedback: Designing a Custom 3D-Printed Surface to Enhance Signal Mediation." In: *Sensors*. Oct. 2020. DOI: 10.1109/SENSORS47125.2020.9278770. URL: https://ieeexplore.ieee.org/document/9278770.

[C19] M. Gellert, N. Katzman, J. P. Klein, A. Frenkel, M. Klein, J. R. Cooperstock, J. J. Schlesinger, and Y. Bitan. "Comparing auditory and tactile cues to inform clinicians of patients' vital signs." In: *Annual Meeting of the Human Factors and Ergonomics Society*. Chicago, IL, USA, Oct. 2020. DOI: 10.1177/2327857920091015. URL: https://journals.sagepub.com/doi/abs/10.1177/2327857920091015.

[C20] **J. R. Blum**, J. Cauchard, and J. R. Cooperstock. "Habituation to Pseudo-Ambient Vibrotactile Patterns for Remote Awareness." In: *Haptics Symposium*. Washington DC, USA: IEEE, Mar. 2020. DOI: 10.1109/HAPTICS45997.2020.ras.HAP20.153.550dbcba. URL: https://ieeexplore.ieee.org/document/9086336/. Acceptance rate: 38%.

[C21] **J. Regimbal**, **N. Radi**, **A. Weill–Duflos**, and J. R. Cooperstock. "Single-Actuator Simultaneous Haptic Rendering for Multiple Vital Signs." In: *HCI International*. Copenhagen, Denmark, July 2020. DOI: 10.1007/978-3-030-60117-1_19. URL: https://dl.acm.org/doi/10.1007/978-3-030-60117-1_19.

[C22] **P. Alirezaee**, **A. Weill–Duflos**, J. Schlesinger, and J. R. Cooperstock. "Exploring the Effectiveness of Haptic Alarm Displays for Critical Care Environments." In: *Haptics Symposium*. Washington DC, USA: IEEE, Mar. 2020. DOI: 10.1109/HAPTICS45997.2020.ras.HAP20.156.6c3cc0bf. URL: https://ieeexplore.ieee.org/document/9086328. Acceptance rate: 38%.

[C23] **P. Fortin**, **J. Blum**, **A. Weill–Duflos**, and J. R. Cooperstock. "Contact Force Estimation from Raw Photoplethysmogram Signal." In: *Sensors*. Oct. 2020. DOI: 10.1109/SENSORS47125.2020.9278658. URL: https://ieeexplore.ieee.org/document/9278658.

[C24] **P. Vyas**, **F. Al-Taha**, **J. R. Blum**, **A. Weill–Duflos**, and J. R. Cooperstock. "Ten Little Fingers, Ten Little Toes: Can Toes Match Fingers for Haptic Discrimination?" In: *Haptics Symposium (also appears in Transactions on Haptics)*. Washington DC, USA: IEEE, Mar. 2020. DOI: 10.1109/TOH.2020.2966969. URL: https://ieeexplore.ieee.org/document/8960637. Acceptance rate: 38%.

[C25] **P. Vyas**, **F. Al-Taha**, **J. R. Blum**, and J. R. Cooperstock. "HapToes: Vibrotactile Numeric Information Delivery via Tactile Toe Display." In: *Haptics Symposium*. Washington DC, USA: IEEE, Mar. 2020. DOI: 10.1109/HAPTICS45997.2020.ras.HAP20.34.8ad689d4. URL: https://ieeexplore.ieee.org/document/9086321. Acceptance rate: 38%.

[C26] **A. Weill–Duflos**, **F. Al-Taha**, **P. Fortin**, and J. R. Cooperstock. "BarryWhaptics: Towards Countering Social Biases Using Real-Time Haptic Enhancement of Voice." In: *World Haptics Conference*. Tokyo, Japan, June 2019. DOI: 10.1109/WHC.2019.8816153. URL: https://ieeexplore.ieee.org/document/8816153. Acceptance rate: 46%.

[C27] **E. Sulmont**, E. Patitsas, and J. R. Cooperstock. "Can You Teach Me To Machine Learn?" In: *Special Interest Group on Computer Science Education Technical Symposium*. Minneapolis, MN, Feb. 2019. DOI: 10.1145/3287324.3287392. URL: http://dl.acm.org/authorize?N682231.

[C28] **G. Yin**, M. Otis, **P. Fortin**, and J. R. Cooperstock. "Evaluating Multimodal Feedback for Accomplishing Assembly Tasks in a Virtual Environment." In: *Engineering Interactive Computing Systems*. Valencia, Spain: ACM SIGCHI, June 2019. DOI: 10.1145/3331163. URL: http://dl.acm.org/authorize?N682239.

[C29] **J. Blum** and J. R. Cooperstock. "Single-Actuator Vibrotactile Numeric Information Delivery in the Face of Distraction." In: *World Haptics Conference*. Tokyo, Japan, June 2019. DOI: 10.1109/WHC.2019.8816082. URL: https://ieeexplore.ieee.org/document/8816082. Acceptance rate: 46%.

[C30] N. Katzman, M. Gellert, J. J. Schlesinger, T. Oron-Gilad, J. R. Cooperstock, and Y. Bitan. "Evaluation of tactile cues for simulated patients' status under high and low workload." In: *International Meeting*. Seattle, WA, USA: Human Factors and Ergonomics Society (HFES), Oct. 2019. DOI: 10.1177/1071181319631285. URL: https://journals.sagepub.com/doi/10.1177/1071181319631285.

[C31] **M. F. de Vargas**, **A. Weill–Duflos**, and J. R. Cooperstock. "Haptic Speech Communication Using Stimuli Evocative of Phoneme Production." In: *World Haptics Conference*. Tokyo, Japan, June 2019. DOI: 10.1109/WHC.2019.8816145. URL: https://ieeexplore.ieee.org/document/8816145. Acceptance rate: 46%.

[C32] **P. Alirezaee**, J. Schlesinger, and J. R. Cooperstock. "Ergonomic Haptic Displays - Reducing Clinician Dependence on Patient Monitors and Auditory Alarms." In: *Human Factors and Ergonomics in Healthcare Symposium*. Chicago, IL, USA, Mar. 2019.

[C33] **P. Fortin**, **D. Huang**, and J. R. Cooperstock. "Exploring the Use of Fingerprint Sensor Gestures for Unlock Journaling: A Comparison with Slide-to-X." In: *Mobile HCI*. Taipei, Taiwan: ACM, Oct. 2019. DOI: 10.1145/3338286.3340135. URL: http://dl.acm.org/authorize?N684389.

[C34] **P. Fortin**, **E. Sulmont**, and J. R. Cooperstock. "Detecting Perception of Smartphone Notifications using Skin Conductance Responses." In: *Human Factors in Computing (CHI)*. Glasgow, Scotland: ACM, Apr. 2019. DOI: 10.1145/3290605.3300420. URL: http://dl.acm.org/authorize?N682230. 🏆 Honorable mention.

[C35] **J. Anlauff**, **T. Kim**, and J. R. Cooperstock. "Feel-a-Bump: Haptic Feedback for Foot-based Angular Menu Selection." In: *Haptics Symposium*. San Francisco, CA: IEEE, Mar. 2018. DOI: 10.1109/HAPTICS.2018.8357172. URL: https://ieeexplore.ieee.org/stamp/stamp.jsp?arnumber=8357172. Acceptance rate: 44%.

[C36] **J. Blum**, J. R. Cooperstock, and J. Cauchard. "Pseudo-Ambience: Filling the Gap Between Notifications and Continuous Information Displays." In: *UbiTtention Workshop on Smart & Ambient Notification and Attention Management*. Singapore: ACM, Oct. 2018. DOI: 10.1145/3267305.3274111. URL: http://dl.acm.org/authorize?N682234.

[C37] **P. Fortin**, **E. Sulmont**, and J. R. Cooperstock. "SweatSponse: Closing the Loop on Notification Delivery Using Skin Conductance Responses." In: *User Interface Software and Technology (UIST)*. Berlin, Germany: ACM, Oct. 2018. DOI: 10.1145/3266037.3266084. URL: http://dl.acm.org/authorize?N682232.

[C38] **T. Kim**, **H. Ju**, and J. R. Cooperstock. "Pressure or Movement? Usability of Multi-Functional Foot-Based Interfaces." In: *Designing Interactive Systems (DIS)*. Hong Kong: ACM, June 2018. DOI: 10.1145/3196709.3196759. URL: http://dl.acm.org/authorize?N682246. Acceptance rate: 23%.

[C39] E. Cupellini, J. R. Cooperstock, and M. Olivetti. "The Sound Motion Controller: a distributed system for interactive music performance." In: *Conference of the European Society for the Cognitive Sciences of Music*. Ghent, Belgium, July 2017. URL: https://iris.uniroma1.it/bitstream/11573/1023094/2/Cupellini_Sound-motion_2017.pdf.

[C40] **D. Horodniczy** and J. R. Cooperstock. "Free the Hands! Enhanced Target Selection via a Variable-Friction Shoe." In: *Human Factors in Computing Systems (CHI)*. Denver, CO, May 2017. DOI: 10.1145/3025453.3025625. URL: http://dl.acm.org/authorize?N682249. Acceptance rate: 25%.

[C41] D. M. Gay-Betton, **P. Alirezaee**, J. R. Cooperstock, and J. J. Schlesinger. "HAPTIC – Haptic Anatomical Positioning To Improve Clinical Monitoring." In: *Design & Semantics of Form & Movement (DeSForM)*. Delft-Eindhoven, Netherlands, Oct. 2017. DOI: 10.5772/intechopen.71111. URL: https://www.intechopen.com/books/proceedings-of-the-conference-on-design-and-semantics-of-form-and-movement-sense-and-sensitivity-desform-2017/haptic-haptic-anatomical-positioning-to-improve-clinical-monitoring.

[C42] **J. Anlauff**, J. Fung, and J. R. Cooperstock. "VibeWalk – Foot-Based Tactons During Walking and Quiet Stance." In: *World Haptics Conference*. Munich, Germany, June 2017. DOI: 10.1109/WHC.2017.7989977. URL: https://ieeexplore.ieee.org/document/7989977/. Acceptance rate: 59%.

[C43] **M. Diaz**, **R. Girgis**, T. Fevans, and J. R. Cooperstock. "To Veer or Not to Veer: Learning How to Stay Within the Crosswalk from Experts." In: *International Workshop on Assistive Computer Vision and Robotics*. Venice, Italy: IEEE, Oct. 2017. DOI: 10.1109/ICCVW.2017.174. URL: https://ieeexplore.ieee.org/document/8265384.

[C44] **P. Alirezaee**, **R. Girgis**, **T. Kim**, J. Schlesinger, and J. R. Cooperstock. "Did you feel that? Developing Novel Multimodal Alarms for High Consequence Clinical Environments." In: *International Conference on Auditory Displays*. Happy Valley, PA, USA, June 2017, pp. 175–181. URL: https://smartech.gatech.edu/handle/1853/58377.

[C45] **J. Blum** and J. R. Cooperstock. "Expressing Human State via Parameterized Haptic Feedback for Mobile Remote Implicit Communication." In: *Augmented Human*. Geneva, Switzerland: ACM, Feb. 2016. DOI: 10.1145/2875194.2875225. URL: http://dl.acm.org/authorize?N682240.

[C46] **N. Hieda**, **J. Anlauff**, **S. Smith**, **Y. Visell**, and J. R. Cooperstock. "An Intelligent Floor Surface for Foot-based Exploration of Geospatial Data." In: *International Workshop on Multimedia Signal Processing*. Montreal, Canada, Sept. 2016.

[C47] **D. El-Shimy** and J. R. Cooperstock. "EmbodiNet: Enriching Distributed Musical Collaboration through Embodied Interactions." In: *IFIP TC13 Conference on Human-Computer Interaction (INTERACT)*. Bamberg, Germany, Sept. 2015. DOI: 10.1007/978-3-319-22668-2_1. URL: https://link.springer.com/chapter/10.1007/978-3-319-22668-2_1.

[C48] **F. Tordini**, A. Bregman, and J. R. Cooperstock. "The loud bird doesn't (always) get the worm: Why computational salience also needs brightness and tempo." In: *International Conference on Auditory Displays*. Graz, Austria, July 2015. URL: https://smartech.gatech.edu/handle/1853/54145.

[C49] **J. Blum**, I. Frissen, and J. R. Cooperstock. "Improving Haptic Feedback on Wearable Devices through Accelerometer Measurements." In: *User Interface Software and Technology*. Charlotte, NC: ACM, Nov. 2015. DOI: 10.1145/2807442.2807474. URL: http://dl.acm.org/authorize?N682241. Acceptance rate: 21%.

[C50] **N. Hieda** and J. R. Cooperstock. "Digital Facial Augmentation for Interactive Entertainment." In: *International Conference on Intelligent Technologies for Interactive Entertainment*. Turin, Italy, June 2015. URL: https://ieeexplore.ieee.org/document/7325479.

[C51] **N. Hieda** and J. R. Cooperstock. "sharedFace: Interactive Facial Projection Mapping." In: *International Conference and Exhibition of Virtual Technologies and Uses*. Laval, France, Apr. 2015. DOI: 10.1145/2806173.2806188. URL: http://dl.acm.org/authorize?N682242.

[C52] **V. Vuibert**, W. Stuerzlinger, and J. R. Cooperstock. "Evaluation of docking task performance using mid-air interaction techniques." In: *Symposium on Spatial User Interaction*. Los Angeles, CA: ACM, Aug. 2015. DOI: 10.1145/2788940.2788950. URL: http://dl.acm.org/authorize?N06271.

[C53] P. Fortin, M. Otis, V. Duchaine, and J. R. Cooperstock. "Event-based haptic vibration synthesis using a recursive filter for lower limb prosthetics." In: *International Symposium on Haptic, Audio and Visual Environments and Games (HAVE)*. Dallas, TX, Oct. 2014. DOI: 10.1109/HAVE.2014.6954330. URL: https://ieeexplore.ieee.org/document/6954330.

[C54] **M. Xie** and J. R. Cooperstock. "Heterogeneous Sensor Data Fusion: How Many Cameras Are Needed For An Accurate 3D Reconstruction of Large Scene?" In: *Seventh International Symposium on Computational Intelligence and Design (ISCID)*. Hangzhou, China, Dec. 2014. DOI: 10.1109/ISCID.2014.285. URL: https://ieeexplore.ieee.org/document/7082043.

[C55] **M. Xie** and J. R. Cooperstock. "Time-of-Flight Camera Calibration for Improved 3D Reconstruction of Indoor Scenes." In: *Seventh International Symposium on Computational Intelligence and Design (ISCID)*. Hangzhou, China, Dec. 2014. DOI: 10.1109/ISCID.2014.283. URL: https://ieeexplore.ieee.org/document/7082034.

[C56] **D. El-Shimy** and J. R. Cooperstock. "Reactive Environment for Network Music Performance." In: *New Interfaces for Musical Expression (NIME)*. Daejoen, South Korea, May 2013.

[C57] **F. Tordini**, A. Bregman, A. Ankolekar, T. E. Sandholm, and J. R. Cooperstock. "Toward an improved model of auditory saliency." In: *International Conference on Auditory Displays*. Lodz, Poland, July 2013. URL: https://srl.mcgill.ca/publications/2013-ICAD-FT.pdf.

[C58] **F. Tordini**, A. Bregman, A. Ankolekar, T. E. Sandholm, and J. R. Cooperstock. "Your attention, please! Determining saliency of competing audio stimuli in natural scenarios." In: *Meetings on Acoustics – International Congress on Acoustics*. Vol. 19. Montreal, QC: Acoustical Society of America, June 2013, pp. 189–196. URL: http://asadl.org/poma/resource/1/pmarcw/v19/i1/p010031_s1?bypassSSO=1.

[C59] **J. Anlauff**, J. Fung, and J. R. Cooperstock. "Augmented Feedback for Learning Single-Legged Stance on a Slackline." In: *International Conference on Virtual Rehabilitation*. Philadelphia, PA, Aug. 2013.

[C60] **M. Otis**, **G. Millet**, and J. R. Cooperstock. "Vibration-Induced Friction Control for Walkway Locomotion Interface." In: *Systems, Man, and Cybernetics, Part SMC: Human-Machine*. Manchester, UK: IEEE, Oct. 2013, 6 pgs. URL: http://ieeexplore.ieee.org/xpl/articleDetails.jsp?reload=true&arnumber=6722429.

[C61] **S. Panëels**, **A. Olmos**, **J. Blum**, and J. R. Cooperstock. "Listen to It Yourself! Evaluating Usability of "What's Around Me?" for the Blind." In: *Human Factors in Computing Systems (CHI)*. Paris, France: ACM, Apr. 2013. URL: http://dl.acm.org/authorize?N06272. Acceptance rate: 20%.

[C62] **S. Panëels**, **D. Varenne**, **J. Blum**, and J. R. Cooperstock. "The Walking Straight Mobile Application: Helping the Visually Impaired Avoid Veering." In: *International Conference on Auditory Displays*. Lodz, Poland, July 2013, pp. 25–32. URL: https://srl.mcgill.ca/publications/2013-ICAD-WS.pdf. Best use of sound.

[C63] **D. El-Shimy**, T. Hermann, and J. R. Cooperstock. "A Reactive Environment for Dynamic Volume Control." In: *New Interfaces for Musical Expression (NIME)*. Ann Arbor, Michigan, May 2012. URL: https://srl.mcgill.ca/publications/2012-NIME.pdf.

[C64] **J. Blum**, **D. Greencorn**, and J. R. Cooperstock. "Smartphone sensor reliability for augmented reality applications." In: *Mobile and Ubiquitous Systems (Mobiquitous)*. Lecture Notes of the Institute for Computer Sciences, Social Informatics and Telecommunications Engineering. Beijing, China: Springer, Dec. 2012. URL: https://srl.mcgill.ca/publications/2012-MOBIQUITOUS.pdf.

[C65] K. Kim, J. Bolton, A. Girouard, J. Cooperstock, and R. Vertegaal. "TeleHuman: Effects of 3D Perspective on Gaze and Pose Estimation with a Life-size Cylindrical Telepresence Pod." In: *Human Factors in Computing Systems (CHI)*. Austin, Texas: ACM Press/Addison-Wesley Publishing Co., May 2012, pp. 2531–2540. URL: http://dl.acm.org/authorize?N06274. Acceptance rate: 23%.

[C66] **T. Knight**, **N. Bouillot**, and J. R. Cooperstock. "Visualization feedback for musical ensemble practice: A case study on phrase articulation and dynamics." In: *Visualization and Data Analysis*. IS&T/SPIE Symposium on Electronic Imaging, Jan. 2012, 9 pgs. URL: https://srl.mcgill.ca/publications/2012-VDA.pdf.

[C67] **A. Olmos**, P. Rushka, D. Ko, G. Foote, W. Woszczyk, and J. R. Cooperstock. "Where do you want your ears? Comparing performance quality as a function of listening position in a virtual jazz band." In: *Sound, Music and Computing*. July 2011, 6 pgs. URL: https://srl.mcgill.ca/publications/2011-SMC.pdf.

[C68] F. Bérard, **G. Wang**, and J. R. Cooperstock. "On the Limits of the Human Motor Control Precision: the Search for a Device's Human Resolution." In: *IFIP TC13 Conference on Human-Computer Interaction (INTERACT)*. Lisbon, Portugal, Sept. 2011, pp. 107–122. URL: https://srl.mcgill.ca/publications/2011-INTERACT.pdf.

[C69] **G. Millet**, **M. Otis**, **G. Chaw**, and J. R. Cooperstock. "Initial Development of a Variable-Friction Floor Surface." In: *Canadian Medical and Biological Engineering Conference*. Festival of International Conferences on Caregiving, Disability, Aging and Technology, June 2011, 4 pgs.

[C70] **G. Wang**, M. McGuffin, F. Bérard, and J. R. Cooperstock. "Pop-up Depth Views for Improving 3D Target Acquisition." In: *Graphics Interface*. St. John's, NL, May 2011, pp. 41–48.

[C71] **I. Garcia-Dorado** and J. R. Cooperstock. "Automatic multi-projector calibration with an uncalibrated camera." In: *International Workshop on Projector-Camera Systems*. Colorado Springs: IEEE, June 2011, pp. 29–36.

[C72] **J. Blum**, **H. Sun**, **A. Olmos**, and J. R. Cooperstock. "End-User Viewpoint Control of Live Video from a Medical Camera Array." In: *International Conference on Distributed Smart Cameras*. Ghent, Belgium, Aug. 2011, pp. 1–6. URL: https://srl.mcgill.ca/publications/2011-ICDSC.pdf.

[C73] **J. Blum**, **M. Bouchard**, and J. R. Cooperstock. "What's around me? Spatialized audio augmented reality for blind users with a smartphone." In: *Mobile and Ubiquitous Systems (Mobiquitous)*. Lecture Notes of the Institute for Computer Sciences, Social Informatics and Telecommunications Engineering. Copenhagen, Denmark: Springer, Dec. 2011. URL: https://srl.mcgill.ca/publications/2011-MOBIQUITOUS.pdf. Best paper award.

[C74] **J. Ip** and J. R. Cooperstock. "To Virtualize or Not? The Importance of Physical and Virtual Components in Augmented Reality Board Games." In: *International Conference on Entertainment Computing*. Vancouver, BC, Canada: Springer-Verlag, Oct. 2011.

[C75] **M. Otis**, **G. Millet**, **S. Beniak**, and J. R. Cooperstock. "Modeling of Lower Limbs for Vibrotactile Compensation." In: *Canadian Medical and Biological Engineering Conference*. Festival of International Conferences on Caregiving, Disability, Aging and Technology, June 2011, 4 pgs.

[C76] **N. Bouillot**, **M. Tomiyoshi**, and J. R. Cooperstock. "Extended User Control over Multichannel Content Delivered over the Web." In: *Conference on Audio Networking*. San Diego: Audio Engineering Society, Nov. 2011, 5 pgs. URL: https://srl.mcgill.ca/publications/2011-AES.pdf.

[C77] **A. Olmos**, K. Lachapelle, and J. R. Cooperstock. "Multiple Angle Viewer for Remote Medical Training." In: *International Workshop on Multimedia Technologies for Distance Leaning*. Firenze, Italy: ACM, Oct. 2010, pp. 19–24. ISBN: 978-1-4503-0158-9. DOI: 10.1145/1878052.1878058. URL: http://dl.acm.org/authorize?N06285.

[C78] R. Ellaway, J. R. Cooperstock, and B. Spencer. "Simulation Integration for Healthcare Education, Training and Assessment." In: *Fifth International Conference on Digital Information Management*. Thunder Bay, ON, Canada, July 2010, pp. 484–489. URL: https://srl.mcgill.ca/publications/2010-DIM.pdf.

[C79] **M. Benovoy** and J. R. Cooperstock. "Psychophysiological signal analysis and classification." In: *CHI 2010 Brain Body and Bytes Workshop*. Atlanta, GA, USA, Apr. 2010, pp. 75–78. URL: https://srl.mcgill.ca/publications/2010-BRAIN-BODY-BYTES.pdf.

[C80] **R. Rajalingham**, **Y. Visell**, and J. R. Cooperstock. "Probabilistic Tracking of Pedestrian Movements via In-Floor Force Sensing." In: *Seventh Canadian Conference on Computer and Robot Vision (CRV)*. Ottawa, ON, Canada, May 2010, pp. 143–150. DOI: 10.1109/CRV.2010.26. URL: https://srl.mcgill.ca/publications/2010-CRV.pdf.

[C81] **Y. Visell**, **A. Law**, **J. Ip**, **S. Smith**, and J. R. Cooperstock. "Interaction Capture in Immersive Virtual Environments via an Intelligent Floor Surface." In: *IEEE Virtual Reality (VR)*. Waltham, MA, USA, Mar. 2010, pp. 313–314. DOI: 10.1109/VR.2010.5444748. URL: https://srl.mcgill.ca/publications/2010-VR.pdf.

[C82] **Y. Visell** and J. R. Cooperstock. "Design of a Vibrotactile Display via a Rigid Surface." In: *Haptics Symposium*. Waltham, MA, USA: IEEE, Mar. 2010, pp. 133–140. DOI: 10.1109/HAPTIC.2010.5444664. URL: https://srl.mcgill.ca/publications/2010-HAPTICS-SYMPOSIUM.pdf. Best paper award.

[C83] **Y. Visell**, **S. Smith**, **A. Law**, **R. Rajalingham**, and J. R. Cooperstock. "Contact Sensing and Interaction Techniques for a Distributed, Multimodal Floor Display." In: *IEEE 3D User Interfaces (3DUI)*. Waltham, MA, USA, Mar. 2010, pp. 75–78. DOI: 10.1109/3DUI.2010.5444718. URL: https://srl.mcgill.ca/publications/2010-3DUI.pdf.

[C84] **A. Law**, **J. Ip**, **B. Peck**, **Y. Visell**, P. Kry, and J. R. Cooperstock. "Multimodal floor for immersive environments." In: *SIGGRAPH Emerging Technologies*. New Orleans, LA, USA: ACM, Aug. 2009, 16:1. DOI: 10.1145/1597956.1597972. URL: http://dl.acm.org/authorize?N06286.

[C85] **A. Olmos**, **M. Brulé**, **N. Bouillot**, **M. Benovoy**, **J. Blum**, **H. Sun**, N. W. Lund, and J. R. Cooperstock. "Exploring the role of latency and orchestra placement on the networked performance of a distributed opera." In: *12th Annual International Workshop on Presence*. Los Angeles, CA, USA, Nov. 2009, 9 pgs. URL: https://srl.mcgill.ca/publications/2009-PRESENCE.pdf.

[C86] F. Bérard, **J. Ip**, **M. Benovoy**, **D. El-Shimy**, **J. Blum**, and J. R. Cooperstock. "Did 'Minority Report' Get it Wrong? Superiority of the Mouse over 3D Input Devices for a 3D Placement Task." In: *IFIP TC13 Conference on Human-Computer Interaction (INTERACT)*. Uppsala, Sweden, Aug. 2009, pp. 400–414. URL: https://srl.mcgill.ca/publications/2009-INTERACT.pdf.

[C87] J. R. Cooperstock and **G. Wang**. "Stereoscopic Display Technologies, Interaction Paradigms and Rendering Approaches for Neurosurgical Visualization." In: *Stereoscopic Displays and Applications*. San Jose, CA, USA, Jan. 2009, 11 pgs. URL: https://srl.mcgill.ca/publications/2009-SDA.pdf.

[C88] **D. El-Shimy**, G. Marentakis, and J. R. Cooperstock. "Multimodal Feedback in 3D Target Acquisition." In: *IEEE 3D User Interfaces (3DUI)*. Lafayette, LA, USA, Mar. 2009, pp. 95–98. URL: https://srl.mcgill.ca/publications/2009-3DUI.pdf.

[C89] **J. Anlauff**, T. Hermann, T. Grosshauser, and J. R. Cooperstock. "Modular tacTiles for Sonic Interactions with Smart Environments." In: *Haptic and Audio Interaction Design (HAID), Fourth International Workshop*. Dresden, Germany, Sept. 2009, pp. 100–108. URL: https://srl.mcgill.ca/publications/2009-HAID.pdf.

[C90] **N. Bouillot** and J. R. Cooperstock. "Challenges and Performance of High-Fidelity Audio Streaming for Interactive Performances." In: *New Interfaces for Musical Expression (NIME)*. Pittsburgh, PA, USA, June 2009, pp. 135–140. URL: https://srl.mcgill.ca/publications/2009-NIME.pdf.

[C91] **N. Bouillot**, **M. Brulé**, and J. R. Cooperstock. "Performance metrics for network audio systems: Methodology and a preliminary comparison." In: *Audio Engineering Society 127th Convention*. New York, NY, USA, Oct. 2009. URL: http://www.aes.org/e-lib/browse.cfm?elib=15134.

[C92] **R. Pellerin**, **N. Bouillot**, **T. Pietkiewicz**, M. Wozniewski, Z. Settel, E. Gressier-Soudan, and J. R. Cooperstock. "SoundPark: Exploring Ubiquitous Computing through a Mixed Reality Multi-player Game Experiment." In: *9e Conférence Internationale sur Les NOuvelles TEchnologies de la REpartition*. Montreal, QC, Canada, July 2009, 9 pgs. URL: https://srl.mcgill.ca/publications/2009-NOTERE.pdf. Best paper award.

[C93] **R. Pellerin**, **N. Bouillot**, **T. Pietkiewicz**, M. Wozniewski, Z. Settel, E. Gressier-Soudan, and J. R. Cooperstock. "SoundPark: Towards Highly Collaborative Game Support in a Ubiquitous Computing Architecture." In: *9th IFIP International Conference on Distributed Applications and Interoperable Systems*. Lisbon, Portugal, June 2009, pp. 22–45. URL: https://srl.mcgill.ca/publications/2009-DAIS.pdf.

[C94] V. N. Salimpoor, **M. Benovoy**, G. G. Longo, K. Larcher, A. Dagher, J. R. Cooperstock, and R. J. Zatorre. "The Rewarding Aspects of Music Listening Involve the Dopaminergic Striatal Reward Systems of the Brain: An Investigation with [C11]Raclopride PET and fMRI." In: *15th Annual Meeting of the Organization for Human Brain Mapping*. San Francisco, CA, USA, June 2009.

[C95] Z. Settel, M. Wozniewski, **N. Bouillot**, and J. R. Cooperstock. "Audio Graffiti: A location based audio-tagging and remixing environment." In: *International Computer Music Conference*. Montreal, QC, Canada, Aug. 2009. URL: https://srl.mcgill.ca/publications/2009-ICMC.pdf.

[C96] **Y. Visell**, **A. W. Law**, and J. R. Cooperstock. "Toward Iconic Vibrotactile Information Display Using Floor Surfaces." In: *Third Joint Eurohaptics Conference and Symposium on Haptic Interfaces for Virtual Environment and Teleoperator Systems*. Salt Lake City, UT, USA, Mar. 2009, pp. 267–272. URL: https://srl.mcgill.ca/publications/2009-WHC.pdf.

[C97] **A. Law W.**, **B. Peck V.**, **Y. Visell**, P. Kry, and J. R. Cooperstock. "A Multi-modal Floor-space for Experiencing Material Deformation Underfoot in Virtual Reality." In: *International Workshop on Haptic Audio Visual Environments and Games*. Ottawa, ON, Canada: IEEE, Oct. 2008. URL: https://srl.mcgill.ca/publications/2008-HAVE.pdf.

[C98] **E. Cupellini**, **C. Rizzuti**, E. Bilotta, P. Pantano, **M. Wozniewski**, and J. R. Cooperstock. "Exploring Musical Mappings and Generating Accompaniment with Chaotic Systems." In: *International Computer Music Conference*. Belfast, UK, Aug. 2008. URL: https://srl.mcgill.ca/publications/2008-ICMC.pdf.

[C99] B. L. Giordano, S. McAdams, **Y. Visell**, J. R. Cooperstock, H. Yao, and V. Hayward. "Non-visual identification of walking grounds." In: *Acoustics'08*. Vol. 123. 5. Paris, France, June 2008, p. 3412. URL: https://srl.mcgill.ca/publications/2008-ACOUSTICS.pdf.

[C100] **M. Benovoy**, J. Deitcher, and J. R. Cooperstock. "Biosignals Analysis and its Application in a Performance Setting: Towards the development of an Emotional-Imaging Generator." In: *IEEE International Conference on Bio-Inspired Systems and Signal Processing (BIOSIGNALS)*. Madeira, Portugal, Jan. 2008. URL: https://srl.mcgill.ca/publications/2008-BIOSIGNALS.pdf.

[C101] **M. Benovoy**, M. Zadel, R. Absar, M. Wozniewski, and J. R. Cooperstock. "Towards immersive multimodal gameplay." In: *GAMEON-NA*. Montreal, QC, Canada, Aug. 2008. URL: https://srl.mcgill.ca/publications/2008-GAMEON.pdf.

[C102] **M. Wozniewski**, **N. Bouillot**, Z. Settel, and J. R. Cooperstock. "An Augmented Reality Framework for Wireless Mobile Performance." In: *5th International Mobile Music Workshop*. Vienna, Austria, May 2008. URL: https://srl.mcgill.ca/publications/2008-MMW.pdf.

[C103] **M. Wozniewski**, **N. Bouillot**, Z. Settel, and J. R. Cooperstock. "Large-Scale Mobile Audio Environments for Collaborative Musical Interaction." In: *New Interfaces for Musical Expression (NIME)*. Genova, Italy, June 2008. URL: https://srl.mcgill.ca/publications/2008-NIME-Wozniewski.pdf.

[C104] **N. Bouillot**, **M. Wozniewski**, Z. Settel, and J. R. Cooperstock. "A Mobile Wireless Augmented Guitar." In: *New Interfaces for Musical Expression (NIME)*. Genova, Italy, June 2008. URL: https://srl.mcgill.ca/publications/2008-NIME-Bouillot.pdf.

[C105] **S. Pelletier** and J. R. Cooperstock. "Fast image restoration with the Huber-Markov prior model." In: *International Conference on Image Processing*. San Diego, CA, USA, Oct. 2008. URL: https://srl.mcgill.ca/publications/2008-ICIP.pdf.

[C106] V. N. Salimpoor, **M. Benovoy**, G. Longo, J. R. Cooperstock, and R. J. Zatorre. "Music and the Reward System: Characterizing Intensely Pleasurable Responses to Music." In: *The Neurosciences and Music – III*. Montreal, QC, Canada, June 2008.

[C107] **Y. Visell**, B. Giordano, J. R. Cooperstock, K. Franinovic, **A. Law**, S. McAdams, **K. Jathal**, and F. Fontana. "A Vibrotactile Device for Display of Virtual Ground Materials in Walking." In: *EuroHaptics*. Madrid, Spain, June 2008. URL: https://srl.mcgill.ca/publications/2008-EUROHAPTICS.pdf.

[C108] **Z. Qi** and J. R. Cooperstock. "Depth-based Image Mosaicing for Both Static and Dynamic Scenes." In: *International Conference on Pattern Recognition (ICPR)*. Tampa, FL, USA, Dec. 2008. URL: https://srl.mcgill.ca/publications/2008-ICPR.pdf.

[C109] J. R. Cooperstock, **M. Wozniewski**, and Z. Settel. "Towards mobile spatial audio for distributed musical systems and multi-user virtual environments." In: *Spatial Audio for Mobile Devices, Workshop in conjunction with International Conference on Human Interaction with Mobile Devices and Services (MobileHCI)*. Singapore, Sept. 2007. URL: https://srl.mcgill.ca/publications/2007-SAMD.pdf.

[C110] Y. Kinoe and J. R. Cooperstock. "Peripheral Telecommunications: Supporting Distributed Awareness and Seamless Transitions to the Foreground." In: *International Conference on Smart Homes and Health Telematics (ICOST)*. Nara, Japan, June 2007. URL: https://srl.mcgill.ca/publications/2007-ICOST.pdf.

[C111] **M. Wozniewski**, Z. Settel, and J. R. Cooperstock. "AudioScape: A Pure Data library for management of virtual environments and spatial audio." In: *PureData Convention*. Montreal, QC, Canada, Aug. 2007. URL: https://srl.mcgill.ca/publications/2007-PDCONV.pdf.

[C112] **M. Wozniewski**, Z. Settel, and J. R. Cooperstock. "User-specific audio rendering and steerable sound for distributed virtual environments." In: *International Conference on Auditory Display*. Montreal, QC, Canada, June 2007. URL: https://srl.mcgill.ca/publications/2007-ICAD-Wozniewski.pdf.

[C113] J. Roston, C. Bradley, and J. R. Cooperstock. "Underwater Window: High Definition Video on VENUS and NEPTUNE." In: *Oceans '07*. Vancouver, BC, Canada, Sept. 2007, pp. 1–8. DOI: 10.1109/OCEANS.2007.4449327. URL: http://ieeexplore.ieee.org/xpls/abs_all.jsp?arnumber=4449327.

[C114] **S. Audet** and J. R. Cooperstock. "Shadow Removal in Front Projection Environments using Object Tracking." In: *IEEE Projector-Camera Systems (ProCams)*. Minneapolis, MN, USA, June 2007. URL: https://srl.mcgill.ca/publications/2007-PROCAMS.pdf.

[C115] **S. Pelletier** and J. R. Cooperstock. "Fast super-resolution for rational magnification factors." In: *International Conference on Image Processing (ICIP)*. San Antonio, TX, USA, Sept. 2007. URL: https://srl.mcgill.ca/publications/2007-ICIP.pdf.

[C116] **Y. Visell** and J. R. Cooperstock. "Enabling Gestural Interaction by Means of Tracking Dynamical Systems Models and Assistive Feedback." In: *IEEE Systems, Man and Cybernetics*. Montreal, QC, Canada, Oct. 2007. URL: https://srl.mcgill.ca/publications/2007-SMC.pdf.

[C117] **Y. Visell** and J. R. Cooperstock. "Modeling and Continuous Sonification of Affordances for Gesture-Based Interfaces." In: *International Conference on Auditory Display*. Montreal, QC, Canada, June 2007. URL: https://srl.mcgill.ca/publications/2007-ICAD-Visell.pdf.

[C118] **Y. Visell**, J. R. Cooperstock, and K. Franinovic. "Toward an Architectural Platform for Audio-Haptic Simulation in Walking." In: *Enactive Interfaces (ENACTIVE'07)*. Grenoble, France, Nov. 2007. URL: https://srl.mcgill.ca/publications/2007-ENACTIVE.pdf.

[C119] **Z. Qi** and J. R. Cooperstock. "Automated Change Detection in an Undersea Environment using a Statistical Background Model." In: *Oceans '07*. Vancouver, BC, Canada, Sept. 2007, pp. 1–6. DOI: 10.1109/OCEANS.2007.4449201. URL: https://srl.mcgill.ca/publications/2007-OCEANS.pdf.

[C120] **Z. Qi** and J. R. Cooperstock. "Overcoming Parallax and Sampling Density Issues in Image Mosaicing of Non-Planar Scenes." In: *British Machine Vision Conference (BMVC)*. Warwick, UK, Sept. 2007. URL: https://srl.mcgill.ca/publications/2007-BMVC.pdf.

[C121] **F. Cayouette** and J. R. Cooperstock. "Generic Real-Time Tracking Method on Semi-Dynamic Scenes." In: *International Conference on Pattern Recognition (ICPR)*. Hong Kong, Aug. 2006, pp. 711–714. DOI: 10.1109/ICPR.2006.602. URL: http://ieeexplore.ieee.org/xpls/abs_all.jsp?arnumber=1698991. Acceptance rate: 54%.

[C122] **F. Rudzicz**. "Clavius: bi-directional parsing for generic multimodal interaction." In: *Proceedings of the 21st International Conference on computational Linguistics and 44th Annual Meeting of the Association for Computational Linguistics: Student Research Workshop*. COLING ACL '06. Sydney, Australia: Association for Computational Linguistics, 2006, pp. 85–90. URL: http://portal.acm.org/citation.cfm?id=1557856.1557875.

[C123] **F. Rudzicz**. "Put a grammar here: bi-directional parsing in multimodal interaction." In: *Human Factors in Computing Systems (CHI), Extended Abstracts*. Montreal: ACM, 2006, pp. 1277–1282. ISBN: 1-59593-298-4. DOI: http://doi.acm.org/10.1145/1125451.1125689. URL: http://doi.acm.org/10.1145/1125451.1125689. Acceptance rate: 24%.

[C124] **M. Wozniewski**, Z. Settel, and J. R. Cooperstock. "A framework for immersive spatial audio performance." In: *New Interfaces for Musical Expression (NIME)*. Paris, France, June 2006. URL: https://srl.mcgill.ca/publications/2006-NIME.pdf.

[C125] **M. Wozniewski**, Z. Settel, and J. R. Cooperstock. "A Paradigm for Physical Interaction with Sound in 3-D Audio Space." In: *International Computer Music Conference*. New Orleans, LA, USA, Nov. 2006. URL: https://srl.mcgill.ca/publications/2006-ICMC.pdf.

[C126] **M. Wozniewski**, Z. Settel, and J. R. Cooperstock. "A Spatial Interface for Audio and Music Production." In: *International Conference on Digital Audio Effects (DAFx)*. Montreal, QC, Canada, Sept. 2006. URL: https://srl.mcgill.ca/publications/2006-DAFX.pdf.

[C127] **S. Arseneau** and J. R. Cooperstock. "An Asymmetrical Diffusion Framework for Junction Analysis." In: *British Machine Vision Conference (BMVC)*. Edinburgh, UK, Sept. 2006. URL: https://srl.mcgill.ca/publications/2006-BMVC-Arseneau.pdf.

[C128] **S. Arseneau** and J. R. Cooperstock. "An Improved Representation of Junctions through Asymmetric Tensor Diffusion." In: *International Symposium on Visual Computing*. Lake Tahoe, NV, USA, Nov. 2006. URL: https://srl.mcgill.ca/publications/2006-ISVC.pdf.

[C129] **S. Pelletier** and J. R. Cooperstock. "Preconditioning for temporal video superresolution." In: *British Machine Vision Conference (BMVC)*. Edinburgh, UK, Sept. 2006. URL: https://srl.mcgill.ca/publications/2006-BMVC-Pelletier.pdf.

[C130] **Z. Qi** and J. R. Cooperstock. "Wide-Baseline Image Mosaicing for Indoor Environments." In: *International Conference on Pattern Recognition (ICPR)*. Hong Kong, Aug. 2006. URL: https://srl.mcgill.ca/publications/2006-ICPR.pdf.

[C131] J. R. Cooperstock. "Interacting in Shared Reality." In: *HCI International, Conference on Human-Computer Interaction*. Las Vegas, NV, USA, July 2005. URL: https://srl.mcgill.ca/publications/2005-HCI.pdf.

[C132] **J. Yin** and J. R. Cooperstock. "A New Photo Consistency Test for Voxel Coloring." In: *Canadian Conference on Computer and Robot Vision*. Victoria, BC, Canada: IEEE Computer Society, May 2005, pp. 566–570. DOI: 10.1109/CRV.2005.9. URL: http://ieeexplore.ieee.org/xpls/abs_all.jsp?arnumber=1443180.

[C133] **S. Pelletier**, **S. Spackman**, and J. R. Cooperstock. "High-Resolution Video Synthesis from Mixed-Resolution Video Based on the Estimate-and-Correct Method." In: *IEEE Workshop on Applications of Computer Vision (WACV)*. Breckenridge, CO, USA, Jan. 2005. URL: https://srl.mcgill.ca/publications/2005-WACV-Pelletier.pdf.

[C134] **W. Sun** and J. R. Cooperstock. "Requirements for Camera Calibration: Must Accuracy Come with a High Price?" In: *IEEE Workshop on Applications of Computer Vision (WACV)*. Breckenridge, CO, USA, Jan. 2005. URL: https://srl.mcgill.ca/publications/2005-WACV-Sun.pdf.

[C135] J. R. Cooperstock, J. Roston, and W. Woszczyk. "Broadband Networked Audio: Entering the Era of Multisensory Data Distribution." In: *18th International Congress on Acoustics*. Kyoto, Japan, Apr. 2004. URL: https://srl.mcgill.ca/publications/2004-ICA.pdf.

[C136] **F. Rioux**, **F. Rudzicz**, and **M. Wozniewski**. "The Modellers' Apprentice – The Toolglass Metaphor in an Immersive Environment." In: *British HCI Group Annual Conference*. Leeds, UK, Sept. 2004.

[C137] **J. Yin** and J. R. Cooperstock. "Improving Depth Maps by Nonlinear Diffusion." In: *12th International Conference on Computer Graphics, Visualization and Computer Vision*. Plzen, Czech Republic, Feb. 2004, pp. 305–311. URL: https://srl.mcgill.ca/publications/2004-WSCG-diffusion.pdf.

[C138] **M. Hilario** and J. R. Cooperstock. "Occlusion Detection for Front-Projected Interactive Displays." In: *Advances in Pervasive Computing*. Vol. 176. Vienna, Austria: Austrian Computer Society (OCG), Apr. 2004, pp. 265–271. ISBN: 3-85403-176-9. URL: https://srl.mcgill.ca/publications/2004-PERVASIVE.pdf.

[C139] J. Usher, J. R. Cooperstock, W. Woszczyk, and J. R. Cooperstock. "A multi-filter approach to acoustic echo cancellation for teleconferencing." In: *75th Meeting of the Acoustical Society of America*. New York, May 2004.

[C140] W. Woszczyk, J. R. Cooperstock, J. Roston, and W. Martens. "Environment for immersive multi-sensory communication of music using broadband networks." In: *23rd Tonmeistertagung VDT International Audio Convention*. Leipzig, Germany, Nov. 2004. URL: https://srl.mcgill.ca/publications/2004-TONMEISTER.pdf.

[C141] **Y. Boussemart**, **F. Rioux**, **F. Rudzicz**, **M. Wozniewski**, and J. R. Cooperstock. "A Framework for Collaborative 3D Visualization and Manipulation in an Immersive Space using an Untethered Bimanual Gestural Interface." In: *VRST '04: Proceedings of the ACM Symposium on Virtual Reality Software and Technology*. Hong Kong: ACM Press, Nov. 2004, pp. 162–165. ISBN: 1-58113-907-1. DOI: http://doi.acm.org/10.1145/1077534.1077566. URL: http://dl.acm.org/authorize?N06287.

[C142] J. R. Cooperstock. "Intelligent Classrooms need Intelligent Interfaces: How to Build a High-Tech Teaching Environment that Teachers can use?" In: *American Society for Engineering Education*. Nashville, TN, USA, June 2003. URL: https://srl.mcgill.ca/publications/2003-ASEE.pdf.

[C143] E. Cohen, J. R. Cooperstock, and C. Kyriakakis. "The Challenges of Archiving Networked Based Multimedia Performances." In: *Journal of the Acoustical Society of America*. Vol. 112. 5. Cancun, Mexico, Nov. 2002, p. 2280. URL: http://link.aip.org/link/?JAS/112/2280/1.

[C144] **J. Yao** and J. R. Cooperstock. "Arm Gesture Detection in a Classroom Environment." In: *IEEE Workshop on Applications of Computer Vision (WACV)*. Orlando, FL, USA, Dec. 2002, pp. 153–157. URL: https://srl.mcgill.ca/publications/2002-WACV.pdf.

[C145] **S. Arseneau** and J. R. Cooperstock. "Automated Feature Registration for Robust Tracking Methods." In: *IEEE International Conference on Pattern Recognition (ICPR)*. Vol. 2. Quebec City, QC, Canada, Aug. 2002, pp. 1078–1081. DOI: 10.1109/ICPR.2002.1048492. URL: http://doi.ieeecomputersociety.org/10.1109/ICPR.2002.1048492.

[C146] J. R. Cooperstock. "The Classroom of the Future: Enhancing Education through Augmented Reality." In: *HCI International, Conference on Human-Computer Interaction*. New Orleans, LA, USA, 2001, pp. 688–692. URL: https://srl.mcgill.ca/publications/2001-HCI.pdf.

[C147] J. R. Cooperstock and **S. Spackman**. "The Recording Studio that Spanned a Continent." In: *IEEE International Conference on Web Delivering of Music (WEDELMUSIC)*. Florence, Italy, Nov. 2001, pp. 161–167. DOI: 10.1109/WDM.2001.990172. URL: https://srl.mcgill.ca/publications/2001-WEDELMUSIC.pdf.

[C148] L. Winer and J. R. Cooperstock. "The "Intelligent Classroom": Changing teaching and learning with an evolving technological environment." In: *Computers and Learning*. Coventry, UK, Apr. 2001.

[C149] **A. Xu** and J. R. Cooperstock. "Real Time Streaming of Multi-Channel Audio Data over Internet." In: *108th Audio Engineering Society Convention*. Paris, France, 2000, 14 pgs. URL: https://srl.mcgill.ca/publications/2000-AES.pdf.

[C150] **L. Hochstein**, **S. Lerner**, J. J. Clark, and J. R. Cooperstock. "Soccer-Swarm: A Graphical Framework for Soccer-Player Design." In: *International Symposium on Robotics*. Montreal, QC, Canada, May 2000, pp. 108–113. URL: https://srl.mcgill.ca/publications/2000-ISR.pdf.

[C151] **S. Arseneau**, **W. Sun**, **C. Zhao**, and J. R. Cooperstock. "Inter-layer Learning Towards Emergent Cooperative Behavior." In: *17th Annual Conference on Artificial Intelligence, American Association of Artificial Intelligence*. Austin, TX, USA, 2000, pp. 3–8. URL: https://srl.mcgill.ca/publications/2000-AAAI.pdf.

[C152] J. Blatter, J. R. Cooperstock, and R. Harris. "Designing Tools, Designing Learning Opportunities: Issues in Developing a CSCL System for the Technical Communication Classroom." In: *Computer Supported Cooperative Learning Conference*. Stanford, CA, USA, Dec. 1999. URL: https://srl.mcgill.ca/publications/1999-CSCL.pdf.

[C153] **S. Arseneau** and J. R. Cooperstock. "Presenter Tracking in a Classroom Environment." In: *IEEE Industrial Electronics (IECON'99), Session on Cooperative Environments*. Vol. 1. San Jose, CA, USA, Nov. 1999, pp. 145–148. URL: https://srl.mcgill.ca/publications/1999-IECON.pdf.

[C154] **S. Arseneau** and J. R. Cooperstock. "Real-Time Image Segmentation for Action Recognition." In: *IEEE Pacific Rim Conference on Communications, Computers and Signal Processing (PACRIM'99)*. Victoria, BC, Canada, Aug. 1999, pp. 86–89. DOI: 10.1109/PACRIM.1999.799484. URL: https://srl.mcgill.ca/publications/1999-PACRIM.pdf.

[C155] J. R. Cooperstock. "From the Flashing 12:00 to a Usable Machine: Applying UbiComp to the VCR." In: *Human Factors in Computing Systems (CHI), Extended Abstracts*. Atlanta, GA, USA, Mar. 1997, pp. 281–282. URL: http://dl.acm.org/authorize?N06289. Acceptance rate: 24%.

[C156] J. R. Cooperstock and S. Kotsopoulos. "Why Use a Fishing Line When You Have a Net? An Adaptive Multicast Data Distribution Protocol." In: *USENIX*. San Diego, CA, USA, 1996, pp. 343–352. URL: https://srl.mcgill.ca/publications/1996-USENIX.pdf.

[C157] K. Yamaashi, J. R. Cooperstock, T. Narine, and W. Buxton. "Beating the Limitations of Camera-Monitor Mediated Telepresence with Extra Eyes." In: *Human Factors in Computing Systems (CHI)*. Vancouver, BC, Canada, May 1996, pp. 50–57. URL: http://dl.acm.org/authorize?N06280. Acceptance rate: 21%.

[C158] A. Chou, J. R. Cooperstock, R. El-Yaniv, M. Klugerman, and T. Leighton. "The Statistical Adversary Allows Optimal Money-Making Trading Strategies." In: *ACM-SIAM Symposium on Discrete Algorithms (SODA)*. San Francisco, CA, USA, Jan. 1995, pp. 467–476. URL: https://srl.mcgill.ca/publications/1995-SODA.pdf.

[C159] J. R. Cooperstock. "Making the User Interface Disappear: The Reactive Room." In: *IBM Center for Advanced Studies (CASCON)*. Toronto, ON, Canada, 1995, pp. 241–250. URL: http://portal.acm.org/citation.cfm?id=781915.781930.

[C160] J. R. Cooperstock and S. Kotsopoulos. "Exploiting Group Communications for Reliable High Volume Data Distribution." In: *IEEE Pacific Rim Conference on Communications, Computers, Visualization and Signal Processing (PACRIM)*. Victoria, BC, Canada, May 1995. URL: https://srl.mcgill.ca/publications/1995-PACRIM-AFDP.pdf.

[C161] J. R. Cooperstock, K. Tanikoshi, G. Beirne, T. Narine, and W. Buxton. "Evolution of a Reactive Environment." In: *Human Factors in Computing Systems (CHI)*. Denver, CO, USA, May 1995, pp. 170–177. URL: https://dl.acm.org/citation.cfm?id=223926. Acceptance rate: 29%.

[C162] J. R. Cooperstock, K. Tanikoshi, and W. Buxton. "Turning Your Video Monitor into a Virtual Window." In: *IEEE Pacific Rim Conference on Communications, Computers, Visualization and Signal Processing (PACRIM)*. Victoria, BC, Canada, May 1995. URL: https://srl.mcgill.ca/publications/1995-PACRIM-HT.pdf.

[C163] A. Gujar, S. Daya, J. R. Cooperstock, K. Tanikoshi, and W. Buxton. "Talking Your Way Around a Conference: A speech interface for remote equipment control." In: *IBM Center for Advanced Studies (CASCON)*. Toronto, ON, Canada, 1995, p. 289. URL: http://portal.acm.org/citation.cfm?id=781915.781941.

[C164] J. K. Tsotsos, S. Dickinson, M. Jenkin, E. Milios, A. Jepson, B. Down, E. Amdur, S. Stevenson, M. Black, D. Metaxas, J. R. Cooperstock, S. Culhane, F. Nuflo, G. Verghese, W. Wai, D. Wilkes, and Y. Ye. "The PLAYBOT Project." In: *IJCAI Workshop on AI Applications for Disabled People*. Montreal, QC, Canada, Aug. 1995.

[C165] J. R. Cooperstock and E. Milios. "An Efficiently Trainable Neural Network Based Vision-Guided Robot Arm." In: *IEEE Robotics and Automation*. Vol. 2. Atlanta, GA, USA, May 1993, pp. 738–743. DOI: 10.1109/ROBOT.1993.291946. URL: http://ieeexplore.ieee.org/xpls/abs_all.jsp?arnumber=291946.

[C166] J. R. Cooperstock and E. Milios. "Self-Supervised Learning for Docking and Target Reaching." In: *Intelligent Autonomous Systems*. Pittsburgh, 1993, pp. 582–591.

[C167] J. R. Cooperstock and E. Milios. "Adaptive Neural Networks for Vision-Guided Position Control of a Robot Arm." In: *IEEE Intelligent Control*. Glasgow, UK, 1992, pp. 397–403. DOI: 10.1109/ISIC.1992.225124. URL: http://ieeexplore.ieee.org/xpls/abs_all.jsp?arnumber=225124.

[C168] J. R. Cooperstock and E. Milios. "Neural Network Control for a Vision-Guided Mobile Robot Arm." In: *IASTED Control and Robotics*. Vancouver, BC, Canada, 1992, pp. 278–281.

Refereed Conference Publications (Posters)

[CP1] **J. Regimbal** and J. R. Cooperstock. "Investigating Haptic Co-Creation with Reinforcement Learning." In: *Eurohaptics*. Lille, France: IEEE, 2024. 🏆 Best Poster Award.

[CP2] **J. Regimbal**, **E. Wilson**, and J. R. Cooperstock. "See What You Feel: Visualizing Static Haptic Scenes." In: *Eurohaptics*. in press. Lille, France: IEEE, 2024.

[CP3] D. Hsueh, **Y. Liu**, **M.F. De Vargas**, **R. Bazin**, K. Moffatt, and J. R. Cooperstock. "AI-Digital Nurse Avatar (ADiNA)." In: *AGE-WELL AgeTech Innovation Week Conference*. Toronto, Ontario, Oct. 2023.

[CP4] **J. Lane-Smith**, D. Chow, S. Ajami, and J. R. Cooperstock. "The Hapstrument: A Bimanual Haptic Interface for Musical Expression." In: *New Interfaces for Musical Expression (NIME)*. Mexico City, Mexico, May 2023. DOI: 10.5281/zenodo.11189284. URL: https://nime.org/proceedings/2023/nime2023_77.pdf.

[CP5] **M. F. de Vargas**, **D. Marino**, **A. Weill–Duflos**, and J. R. Cooperstock. "Speaking Haptically: from Phonemes to Phrases with a Mobile Haptic Communication System." In: *World Haptics Conference*. Virtual Conference: IEEE, July 2021.

[CP6] J. Cooperstock and **J.R. Blum**. "Touch me like it matters: exploring location and encodings for explicit and implicit communication." In: *Haptics Symposium, Interactive Session associated with the Cross-Cutting Challenge on Using the Skin as a Medium of Communication*. Washington, DC, Mar. 2020.

[CP7] N. Katzman, M. Gellert, T. Oron-Gilad, J. R. Cooperstock, Y. Bitan, and J. J. Schlesinger. "Wearable haptic devices to monitor soldiers' physiology–discreet sensory input improves safety and monitoring in hostile low-light and high-noise conditions." In: *Military Health System Research Symposium*. Department of Defense, 2020. URL: https://mhsrs.health.mil/SitePages/Home.aspx.

[CP8] **P. Fortin**, **J. Blum**, and J. R. Cooperstock. "Towards Consistent Haptic Coupling with HaptiStrap: Doing Better than "Tight yet Comfortable"." In: *User Interface Software and Technology (UIST)*. New Orleans, USA: ACM, Oct. 2019. DOI: 10.1145/3332167.3357118. URL: https://dl.acm.org/doi/10.1145/3332167.3357118. Acceptance rate: 48.8%.

[CP9] **F. Al-Taha**, **P. Fortin**, **A. Weill–Duflos**, and J. R. Cooperstock. "Reversing Voice-Related Biases Through Haptic Feedback." In: *User Interface Software and Technology (UIST)*. Berlin, Germany: ACM, Oct. 2018. DOI: 10.1145/3266037.3266101. URL: http://dl.acm.org/authorize?N682233.

[CP10] **F. Tordini**, A. Bregman, and J. R. Cooperstock. "Effects of global brightness on salience and auditory foreground perception." In: *Speech in Noise Workshop*. Glasgow, Scotland, Jan. 2018. URL: https://spin2018.eu/?p=program&id=66.

[CP11] **J. Blum** and J. R. Cooperstock. "Exploring the Limits of Vibrotactile Numeric Information Delivery." In: *Ubicomp*. Singapore: ACM, Oct. 2018. DOI: 10.1145/3267305.3267658. URL: http://dl.acm.org/authorize?N682245.

[CP12] **T. Kim** and J. R. Cooperstock. "Enhanced Pressure-Based Multimodal Immersive Experiences." In: *Augmented Human*. Seoul, Korea: ACM, Feb. 2018. DOI: 10.1145/3174910.3174928. URL: http://dl.acm.org/authorize?N682247. Best poster presentation award, Acceptance rate: 34%.

[CP13] **P. Fortin**, **J. Blum**, and J. R. Cooperstock. "Raising the Heat: Electrical Muscle Stimulation for Simulated Heat Withdrawal Response." In: *User Interface Software and Technology (UIST)*. Quebec City, Canada: ACM, Oct. 2017. DOI: 10.1145/3131785.3131828. URL: http://dl.acm.org/authorize?N682248. Acceptance rate: 23%.

[CP14] **J. Anlauff**, J. Fung, and J. R. Cooperstock. "Modular Haptic Belt for Augmented Balance Feedback." In: *International Society for Posture and Gait Research*. Seville, Spain, June 2015.

[CP15] **D. El-Shimy** and J. R. Cooperstock. "EmbodiComp: Embodied Interaction for Mixing and Composition." In: *Sound and Music Computing Conference (ICMC — SMC)*. Athens, Greece, Sept. 2014. URL: http://hdl.handle.net/2027/spo.bbp2372.2014.052.

[CP16] **F. Tordini** and J. R. Cooperstock. "Auditory salience modeling via streaming: A behavioural view." In: *Milestones in Music Cognition: BKN 25*. Montreal, Canada, July 2014.

[CP17] **D. Glesser**, F. Bérard, and J. R. Cooperstock. "Overcoming Limitations of the Trackpad for 3D Docking Operations." In: *Human Factors in Computing Systems (CHI), Extended Abstracts*. Paris, France: ACM, Apr. 2013. URL: http://dl.acm.org/authorize?N06273. Acceptance rate: 20%.

[CP18] **C. Côté**, **S. Arseneau**, and J. R. Cooperstock. "Telepresence with no Strings Attached: An Architecture for a Shared Reality Environment." In: *Second International Symposium on Mixed Reality (ISMR)*. Yokohama, Japan, Mar. 2001. URL: https://srl.mcgill.ca/publications/2001-ISMR.pdf.

[CP19] **S. Arseneau** and J. R. Cooperstock. "Automated Camera Tracking in a Real-World Environment." In: Montreal, QC, Canada, 2000.

[CP20] J. R. Cooperstock. "Rethinking the Remote Control." In: *HCI International, Conference on Human-Computer Interaction*. San Francisco, CA, USA, Aug. 1997, p. 116.

Book Chapters

[B1] **T. Kim**, **J. Blum**, **P. Alirezaee**, **A. Arnold**, **P. Fortin**, and J. R. Cooperstock. "Usability of Foot-Based Interaction Techniques for Mobile Solutions." In: *Mobile Solutions and Their Usefulness in Everyday Life*. Springer International Publishing AG, Jan. 2019, pp. 309–329. DOI: 10.1007/978-3-319-93491-4_16. URL: https://link.springer.com/chapter/10.1007/978-3-319-93491-4_16.

[B2] **M. Wozniewski**, Z. Settel, and J. R. Cooperstock. "Sonic Interaction via Spatial Arrangement in Mixed Reality Environments." In: *Sonic Interaction Design*. Ed. by K. Franinovic and S. Serafin. MIT Press, 2013, pp. 329–340. URL: http://xplorebcpaz.ieee.org/xpl/login.jsp?tp=&arnumber=6504636.

[B3] M. Marchal, **G. Cirio**, **Y. Visell**, F. Fontana, S. Serafin, J. R. Cooperstock, and A. Lécuyer. "Multimodal Rendering of Walking over Virtual Grounds." In: *Human Walking in Virtual Environments*. Ed. by Y. Visell, A. Lécuyer, F. Steinicke, and J. Campos. Springer Verlag, 2013, pp. 263–295. URL: http://www.springer.com/engineering/robotics/book/978-1-4419-8431-9.

[B4] **Y. Visell** and J. R. Cooperstock. "Interacting with augmented floor surfaces." In: *Human Walking in Virtual Environments*. Ed. by Y. Visell, A. Lécuyer, F. Steinicke, and J. Campos. Springer Verlag, 2013, pp. 377–399. URL: http://www.springer.com/engineering/robotics/book/978-1-4419-8431-9.

[B5] **Y. Visell**, **R. Rajalingham**, and J. R. Cooperstock. "A review of nonvisual signatures of human walking with applications to person tracking in augmented environments." In: *Walking with the senses: Perceptual techniques for walking in virtual environments*. Ed. by Y. Visell and F. Fontana. Logos Verlag, 2012, pp. 33–68.

[B6] **Y. Visell**, **S. Smith**, and J. R. Cooperstock. "Distributed human-computer interaction with augmented floor surface." In: *Walking with the senses: Perceptual techniques for walking in virtual environments*. Ed. by Y. Visell and F. Fontana. Logos Verlag, 2012, pp. 15–32.

[B7] J. R. Cooperstock. "Human-Computer Interaction." In: *Wiley Encyclopedia of Computer Science and Engineering*. Ed. by B. W. Wah. Vol. 3. Wiley-Interscience, Mar. 2009, pp. 1529–1542. DOI: 10.1002/9780470050118.ecse524. URL: http://onlinelibrary.wiley.com/doi/10.1002/9780470050118.ecse524/abstract.

[B8] **F. Aubé** and **R. Shield**. "Modeling the Effect of Leadership on Crowd Flow Dynamics." In: *Cellular Automata*. Ed. by P. Sloot, B. Chopard, and A. Hoekstra. Vol. 3305. Lecture Notes in Computer Science. originally presented in International Conference on Cellular Automata for Research and Industry. Amsterdam: Springer Berlin / Heidelberg, Oct. 2004, pp. 601–611. DOI: 10.1007/978-3-540-30479-1_62. URL: http://dx.doi.org/10.1007/978-3-540-30479-1_62.

Other Refereed Publications

[O1] **N. Hieda** and J. R. Cooperstock. *SharedFace2*. International Conference and Exhibition of Virtual Technologies and Uses: Laval Virtual ReVolution (refereed interactive demonstration). Laval, France, Apr. 2015.

[O2] **Y. Visell**, **G. Millet**, and J. R. Cooperstock. *Haptic Display via a Vibrating, Rigid Surface*. Demonstration in IEEE Haptics Symposium. Waltham, MA, USA, Mar. 2010.

[O3] **A. Law**, **J. Ip**, **B. Peck**, **Y. Visell**, P. Kry, and J. R. Cooperstock. *A Multimodal Floor for Virtual Environments*. Demonstration in SIGGRAPH Emerging Technologies. Aug. 2009.

[O4] **M. Wozniewski**, Z. Settel, and J. R. Cooperstock. *Ménagerie Imaginaire*. Artwork Performance in New Interfaces for Musical Expression (NIME). New York, NY, USA, June 2007.

Non-refereed Contributions

[N1] J. Cooperstock. "Situating UbiComp Education within or distinct from HCI?" In: *Ubiquitous Computing Education: Why, What, and How:* ed. by A. Girouard, A. L. Kun, A. Roudaut, and O. Shaer. Vol. 9. 6. Dagstuhl, Germany: Schloss Dagstuhl–Leibniz-Zentrum fuer Informatik, Mar. 2019. URL: http://drops.dagstuhl.de/opus/volltexte/2019/11460.

[N2] **E. Sheepy**, M. Orjuela-Laverde, and J. R. Cooperstock. "Encouraging active and collaborative learning in two engineering courses." In: *Supporting Active Learning and Technological Innovation in Studies of Education*. Montreal, Canada, June 2016.

[N3] J. R. Cooperstock and G. Lukács. *How to complain to airlines*. CBC Marketplace blog. Mar. 2014. URL: http://www.cbc.ca/marketplace/blog/plane-wrong-how-to-complain-to-airlines.

[N4] **F. Tordini** and J. R. Cooperstock. "Auditory salience modeling via streaming: A behavioural view." In: *Milestones in Music Cognition: BKN 25*. Montreal, Canada, July 2014.

[N5] J. R. Cooperstock. "Overcoming Complexity in the Teaching and Learning Environment." In: *Materials Science and Technology*. Ralph Lloyd Harris Memorial Symposium. Montreal, Oct. 2013.

[N6] J. R. Cooperstock. *From Rehearsal to Performance: Ensemble Learning in Open Orchestra and Distributed Rehearsal for World Opera*. Presentation in Music Anywhere, Anytime: International Symposium on Synchronous Distance Learning. Oct. 2011.

[N7] **Benovoy, M.**, J. Cooperstock, and M. Levine. *Real-Time Facial Recognition*. Phase II Project Report for Department of National Defence. 2010.

[N8] M. Levine, **Benovoy, M.**, and J. Cooperstock. *An Automatic Real-Time Facial Recognition System*. Phase I Project Report for Department of National Defence. 2009.

[N9] **N. Bouillot**, E. Cohen, J. R. Cooperstock, A. Floros, N. Fonseca, R. Foss, M. Goodman, J. Grant, K. Gross, S. Harris, B. Harshbarger, J. Heyraud, L. Jonsson, J. Narus, M. Page, T. Snook, A. Tanaka, J. Trieger, and U. Zanghieri. "AES White Paper AESTD1003V1: Best Practices in Network Audio." In: *Journal of the Audio Engineering Society* 57.9 (Sept. 2009), pp. 729–741. URL: http://www.aes.org/e-lib/browse.cfm?elib=14839.

[N10] V. N. Salimpoor, **M. Benovoy**, G. Longo, J. R. Cooperstock, and R. J. Zatorre. *Qualifying the Chills Response: Differences between Transient and Prolonged Chills in Response to Music*. Presentation in Auditory Perception, Cognition, and Action Meeting. Chicago, IL, USA, 2008.

[N11] J. Cooperstock. "Plus de largeur du bande, s'il vous plaît." In: *L'interdiscplinarité dans les sciences et technologies de la musique (invited)*. Montreal: Association francophone pour le savoir (ACFAS), May 2006.

[N12] J. Cooperstock. "Integrating Communication with Interaction: Computer Vision Challenges for Interactive and Intelligent Environments." In: *Workshop on Computer Vision for Interactive and Intelligent Environments (invited)*. Lexington, KY, USA, Nov. 2005. URL: http://srl.mcgill.ca/publications/2005-CV4IIE.pdf.

[N13] J. Cooperstock, J. Roston, and Woszczyk. "Broadband Networked Audio: Entering the Era of Multisensory Data Distribution." In: *18th International Congress on Acoustics (invited)*. Kyoto, Apr. 2004.

[N14] **Cayouette, F.**, **Sud, D.**, **Patel, K.**, **Sarikaya, D.**, and J. Cooperstock. "McGill Reddogs Final Report." In: *Robocup*. 2002.

[N15] J. Cooperstock. "Classroom of the Future: Enhancing Education through Augmented Reality." In: *HCI International, Conference on Human-Computer Interaction (invited)*. New Orleans, 2001.

[N16] **Sud, D.**, **Cayouette, F.**, **Gu, J.**, and J. Cooperstock. "McGill Reddogs Final Report." In: *Robocup*. 2001.

[N17] A. Saroyan, R. Harris, and J. R. Cooperstock. *Applying pedagogical principles to teaching and learning with technology*. Multi-cultural perspectives on the use of technology in education. Montreal, QC, Canada, 2000. URL: http://www.education.mcgill.ca/NAFTA.

Patents

[P1] **P. Fortin**, S. Kim, and J. R. Cooperstock. "Closed-loop XR Stimulus Presentation and Perception Feedback using Multi-Channel Physiological Signals." US12032740B2 (United States). July 2024.

[P2] **D. Marino**, **M. Henry**, **P. Fortin**, and J. R. Cooperstock. "System and method for displaying reaction animations." US application 18/463,799 (United States). 2023.

[P3] **H. Lee**, **C. Ducher**, **R. Wang**, **M. Henry**, and J. R. Cooperstock. "Voice Parameter Determination Method, System and Device." US application 18/310,213; Canada application 3,198,267 (United States). 2023.

[P4] **P. Fortin**, **J. Blum**, **Antoine Weill–Duflos**, and J. R. Cooperstock. "System and Method for Wearable Device Contact Force Estimation and Adjustment Feedback." application US 20230129166 A1 (United States). 2022.

[P5] J. R. Cooperstock, **A. Weill-Duflos**, **J. Regimbal**, **N. Radi**, **J. Blum**, **P. Alirezaee**, and **Y. Zhang**. "Methods and systems for controlling a haptic display." US 63/006,141, PCT/CA2021/050461, US 17/917,761 (United States). 2021.

[P6] J. R. Cooperstock and **J. Blum**. "Improving Haptic Feedback on Wearable Devices through Accelerometer Measurements." provisional application US 62/237,772; US 62/416,910 (United States). 2015.

[P7] J. R. Cooperstock, **Y. Visell**, **A. Law**, and K. Franinovic. "Floor-based Haptic Communication System." US 9,041,521 (United States). May 2015.

[P8] J. R. Cooperstock, **J. Blum**, **M. Bouchard**, **A. Olmos**, **S. Panëels**, and **D. El-Shimy**. "Spatialized audio augmented reality for blind users with a smartphone." provisional application US 61/727,828 (expired) (United States). 2012.

[P9] J. R. Cooperstock, **G. Millet**, and **M. Otis**. "Floor-Based Variable Friction Display." provisional application US 61/577,148 (expired) (United States). 2011.

[P10] J. R. Cooperstock, **L. To**, and R. Hess. "Binocular vision assessment and/or therapy." US 8,066,372 (United States). Nov. 2011.

[P11] **S. Spackman**, **S. Pelletier**, and J. R. Cooperstock. "High-resolution Video Synthesis." application 2,435,791 filed July 24, 2003 (expired) (Canada). 2003.

[P12] J. R. Cooperstock, **Y. Zhang**, and **S. Spackman**. "Adaptive Compression for the Storage, Transmission, and Arbitrary Quality Reconstruction of Spatial Data." US 60/339,816, provisional application filed Dec. 17, 2001 (expired) (United States). 2001.

[P13] J. R. Cooperstock and **S. Arseneau**. "A robust person tracking method and system." US 60/234,197 provisional application, filed Sept. 20, 2000 (expired) (United States). 2000.

[P14] J. R. Cooperstock. "Pixel Count-Sensitive PDA Tool Mechanism with Cut/Paste and/or Copy/Paste Function." P09-022797, filed in Japan by Sony Corp. (Japan). Feb. 1997.

Technology Transfer

License agreement signed in 2014 with amblyotech.com to commercialize amblyopia treatment (protected under US patent 8,066,372 "Binocular vision assessment and/or therapy"). The technology was subsequently acquired by Novartis in April 2020.

Research Demonstrations

[D1] 3D Printed Haptic Illusions and Demonstrations. IEEE World Haptics, Tokyo, Japan (conducted by Antoine Weill-Duflos and Pascal Fortin), July 2019.

[D2] Distributed Musical Practice and Performance, I Medici di McGill, Oscar Peterson Hall, Montreal, April 28, 2008.

[D3] Wide Screen Window on the World: Life Size HD Videoconferencing. Supercomputing 2005, Bandwidth Challenge, Seattle, November 16, 2005.

[D4] Streaming DSD Audio comes to the AES. Audio Engineering Society 117th Convention, San Francisco, October 31, 2004.

[D5] Cross-continental low-latency ultra-videoconferencing. McGill-Stanford jazz jam, June 13, 2002.

[D6] Remote master's class using SDI video and multichannel audio. McGill-National Research Council session with Pinchas Zukerman, March 25, 2002.

[D7] SDI video and multichannel audio. CANARIE's 7th Advanced Networks Workshop, Toronto, November 28, 2001.

[D8] Low-latency distributed violin duet in full-frame video. RISQ 2001 Conference, Montreal, November 5, 2001.

The Globe and Mail noted that *"Cooperstock's demonstration was a watershed event for the elite club of the world's computer network engineers. No one had ever before been able to demonstrate that, under the right conditions, it is possible for natural, normal human interaction to occur over the Internet."*

[D9] The Recording Studio that Spans a Continent. Audio Engineering Society 109th Convention, Los Angeles, September 23, 2000.

The Audio Engineering Society noted that this *"Landmark demonstration shows cost effective and high performance transmission systems for high quality 24-bit, 96kHz uncompressed mulitchannel audio are on horizon"*

[D10] Dolby Digital 5.1 audio with MPEG-2 video around the world. Internet Global Summit INET 2000 Conference, Yokohama, July 20, 2000.

CBC Radio noted that *"McGill University in Montreal has made Internet history by setting up the first intercontinental netcast of a live concert in surround sound and full-screen video."*

[D11] Dolby Digital 5.1 audio with MPEG-2 video. CANARIE's 5th Advanced Networks Workshop, Toronto, November 29, 1999.

[D12] First real-time Multichannel Audio Internet demo. Audio Engineering Society 107th Convention, New York, September 26, 1999.

The Learning Technologies Networked noted that *"The performance marked the first real time multichannel audio Internet transmission, a feat made possible by software developed at McGill University by a team under the leadership of Professor Jeremy Cooperstock."*

Invited Talks

Invited Talks to Industry, Students, and the Public

[T1] "HCI Research in the Shared Reality Lab", Professor Speaker Series, Electrical, Computer & Software Engineering Students' Society of McGill University, Montreal, November 8, 2024.

[T2] "AI Digital Nurse Avatar", Place Kensington Retirement Home, Montreal, September 12, 2024.

[T3] "HCI Research in the Shared Reality Lab", Marianopolis Engineering Society, Marianopolis College, Montreal, November 21, 2023.

[T4] "HCI Research inthe Shared Reality Lab", Professor Speaker Series, Electrical, Computer & Software Engineering Students' Society of McGill University, Montreal, November 15, 2023.

[T5] "Engineering of Technologies to Improve the Lives of People Living with Vision Loss", Bioengineering and Biomedical Engineering, McGill University, September 15, 2023.

[T6] "Using smartphones to answer 'What's around me?', 'Am I crossing the street safely?' and 'Where's the entrance?"', Accessible Coding Demonstrations for Youth with Visual Impairment, Science Odyssey 2021, May 1, 2021.

[T7] "From flight simulators to the passenger experience: what can we learn from pilot-training tools to improve airline customer service", AIST–NRC Collaboration Meeting on Improving Client-Agent Interaction, January 17, 2020.

[T8] "I Feel the Earth Move (Under My Feet): Haptic Interaction for Telepresence and Information Delivery", Department of Information Engineering and Computer Science, University of Trento, July 4, 2019.

[T9] "I Feel the Earth Move (Under My Feet): Haptic Interaction for Telepresence and Information Delivery", Department of Industrial Engineering and Management, Ben Gurion University, March 11, 2019.

[T10] "I Feel the Earth Move (Under My Feet): Haptic Interaction for Telepresence and Information Delivery", Information Systems, University of Haifa, November 7, 2018.

[T11] "What's around me? Audio augmented reality for blind users with a smartphone, Pint of Science, Montreal, May 15, 2018.

[T12] Presenter at Canadian National Institute for the Blind's TechnoVision+ Conference, Montreal, May 5, 2017.

[T13] "Innovations for Gaming, AR, Simulation & Training", Innovations for gaming, augmented reality, simulation and training, and other applications, Centre d'entreprises et d'innovation de Montreal (CEIM), April 8, 2016.

[T14] "Enhanced Human: Wearable computing that transforms how we perceive and interact with our world", Department of Computer Science, Technion–Israel Institute of Technology, February 11, 2016.

[T15] "Is Humanity Smart Enough for AI?", McGill Science Outreach Program, Freaky Friday public outreach lecture, October 23, 2015.

[T16] "Delivering a Compelling User Experience in a Computer-Mediated Environment", HCIN 5300, Interactive Entertainment Technologies, Carleton University, March 7, 2014.

[T17] "Multimedia as a Building Block: How audio, video and haptics integrate in a Shared Reality", Multimedia Systems, GLIS 633, School of Information Studies, McGill University, February 13, 2014.

[T18] "Are we there yet? Cognitive Science Challenges in Telepresence and Virtual Reality", Student Association of Cognitive Science, Cognitive Science Research Day, McGill University, November 13, 2013.

[T19] "Telepresence doesn't quite cut it: Multimodal Challenges in Virtual and Shared Reality", Institute of Telecommunications and Multimedia Applications, Universidad Politècnica de València, July 10, 2013.

[T20] "Telepresence doesn't quite cut it: Multimodal Challenges in Virtual and Shared Reality", Dawson College, First Choice Science speakers series, April 17, 2013.

[T21] "Dangerous AI or dangerous us?", Academia Week Artificial Intelligence event, Science Undergraduate Society, McGill University, January 24, 2013.

[T22] "They don't use Skype on the Holodeck", Department of Computer Science, University of British Columbia, July 4, 2012.

[T23] "But can the Holodeck do a good Shiraz?", School of Computer Science and IT, Royal Melbourne Institute of Technology, February 17, 2012.

[T24] "But can the Holodeck do a good Shiraz?", School of Information Technologies, University of Sydney, February 15, 2012.

[T25] "Distributed Music Performance and Latency Issues", School of Drama, Fine Art and Music, University of Newcastle (Australia), February 13, 2012.

[T26] "But can the Holodeck do a good Pinot noir?", Department of Computer Science, University of Otago, January 23, 2012.

[T27] "Shared Reality: Toward perceptually convincing computer-mediated environments", Department of Computer Science, University of Auckland, August 25, 2011.

[T28] "This is your brain on Shared Reality: Toward perceptually convincing computed-mediated environments", Vanier College, Science Week Presentation, March 24, 2011.

[T29] "This is your brain on Shared Reality: Toward perceptually convincing computed-mediated environments", Simula Lab, Oslo, May 15, 2009.

[T30] "This is your brain on Shared Reality: Toward perceptually convincing computed-mediated environments", Ambient Intelligence Group, CITEC, Bielefeld University, May 6, 2009.

[T31] "Distributed and Multimodal Interaction in Virtual and Augmented Reality Environments", McGill University, School of Physical and Occupational Therapy, November 25, 2008.

[T32] "Shared Reality: Effective Interaction for (Demanding) Distributed Tasks", University of Victoria, September 16, 2008.

[T33] "Bidirectional video communication for real-time applications", Institut für Telematik, University of Lübeck, Germany, May 15, 2008.

[T34] "Shared Reality: Effective Interaction for (Demanding) Distributed Tasks", Aalborg University, Esbjerg, Denmark, May 14, 2008.

[T35] "Distributed Multimodal Interaction", Bang & Olufsen, Struer, Denmark, May 13, 2008.

[T36] "Distributed Musical Practice and Performance", Biology and Music Lecture, I Medici di McGill, April 28, 2008.

[T37] "Shared Reality: Effective Interaction for (Demanding) Distributed Tasks", Arts, Media and Engineering, Arizona State University, February 29, 2008

[T38] "From Videoconferencing to Shared Reality" Department of Electrical and Computer Engineering, University of British Columbia, October 4, 2007.

[T39] "Engaging Technolog(ies) for Effective Interaction" Department of Computer Science, Hebrew University of Jerusalem, April 19, 2005.

[T40] "Engaging Technolog(ies) for Effective Interaction" Intelligence, Agents, Multimedia Group, University of Southampton, UK, March 7, 2005.

[T41] "From Videoconferencing to Shared Reality" l'Institut de Recherche et Coordination Acoustique/Musique (IRCAM), Paris, November 25, 2004.

[T42] "From Videoconferencing to Shared Reality" Taiyuan University, Taiyuan, China, April 18, 2004.

[T43] "From Videoconferencing to Shared Reality" Tsighua University, Beijing, China, April 14, 2004.

[T44] "From Videoconferencing to Shared Reality" Beijing University, Beijing, China, April 14, 2004.

[T45] "From Videoconferencing to Shared Reality" Beihan University, Beijing, China, April 12, 2004.

[T46] "From Videoconferencing to Shared Reality" Advanced Telecommunications Research (ATR), Nara, Japan, April 9, 2004.

[T47] "From Videoconferencing to Shared Reality" Dept. of Industrial Engineering, Musashi Institute of Technology, April 5, 2004.

[T48] "High-fidelity telepresence" Graphics and Geometric Computing Seminar Series, Technion – Israel Institute of Technology, January 1, 2003.

[T49] "The Virtual Studio" Royal Conservatory of Music, Toronto, February 25, 2002.

[T50] "Building a Shared Reality" Department of Computer Science, University of Toronto, February 25, 2002.

[T51] "Distributed Concerts and Shared Reality: Just how much streamed data and computation do we need to support effective interaction?" Department of Computer Science, Clarkson University, November 1, 2001.

[T52] "Robotics and Design" Round Table Panel, Centre Design UQAM, February 9, 2000.

[T53] "The Shared Reality Environment" Department of Electrical and Computer Engineering, Ecole Polytechnique, Montreal, May 28, 1999.

Invited Talks in Scholarly Conferences and Workshops

[T54] "Intelligent Systems to Enhance Human Experience", International Laboratory of Learning Systems–DATAIA Workshop, Paris, May 25, 2023.

[T55] Speaker in "Ethics Research I am Excited About", Laidley Centre for Business Ethics, Montreal, April 28, 2023.

[T56] Speaker in "Next Gen Health Powered By The Open Grid And Edge AI", IEEE Future Networks Forum, Montreal, October 14, 2022.

[T57] "Touch and feel when it isn't real: Integrating haptics into the XR experience", InterDigital Scientific Seminar series, December 4, 2020.

[T58] "Taking Haptics Out of the Lab and Into the Wild", Introduction to Haptics for Next Generation XR. International Conference on Intelligent Robots and Systems Tutorial Session, October 29, 2020.

[T59] "Assistive Technology Research in the Shared Reality Lab", Conférence scientifique du CRIR-Institut Nazareth et Louis-Braille, September 25, 2019.

[T60] "Learning from sparse feedback: Adapting an environmental awareness app to visually impaired user preferences", ACM-SIGCHI sponsored summer school on Intelligent User Interfaces in the Era of IoT and Smart Environments, Haifa, Israel, October 3, 2018.

[T61] Speaker in "AR/VR panel", IEEE Multimedia Signal Processing Workshop, Montreal, September 23, 2016.

[T62] "Immersive multimedia and mobile interaction: Applications to new media, gaming, medicine, and beyond" Keynote speaker, Entertainment Technology Summit, Concordia University, Montreal, September 17, 2016.

[T63] "Leveraging video in public safety scenarios", Ninth Canadian Public Safety Interoperability Workshop (CITIG 9), Toronto, December 1, 2015.

[T64] "Future Cities (2040) – Mind: Human and Machine", Institute for the Public Life of Arts and Ideas, Symposium on Future Cities, March 13, 2015.

[T65] "UltraVideo and the Quest for Minimal Latency", International Workshop on High Quality Dynamic cross-continental Networked Artistic interaction, World Opera Association, Struer, Denmark, August 29, 2013.

[T66] "Assisting the blind and treating amblyopia: Two more things you can do with your smartphone", 15e Symposium scientifique sur l'incapacité visuelle et la réadaptation (presented with J. Blum). University of Montreal, February 12, 2013.

[T67] "Revolutions in human-device interaction: How new paradigms impact user experience", International Conference on Consumer Electronics, Consumer Electronics Society, Las Vegas, January 12, 2013.

[T68] "Around the World in 80 ms." Panel presentation in Workshop of the Audio Engineering Society Convention, San Francisco, November 5, 2010.

[T69] "UltraVideo and Virtual Presence: A Video Perspective." Presentation on Teaching in Distributed Performance, Tromsø, Norway, October 15, 2010.

[T70] "Future Interfaces for Audio." Panel presentation in Workshop of the Audio Engineering Society Convention, New York, October 10, 2009.

[T71] "World Opera Technologies and Tests", Danish Sound Technology Network, Aalborg University, June 8, 2009.

[T72] "The Montreal World Opera Experiments". Presentation at the World Opera Symposium, Struer, Denmark, May 12, 2009.

[T73] "Audio-Visual-Haptic-Tactile: Putting them all together for an engaging immersive experience". Panel presentation in Workshop of the Audio Engineering Society Convention, Munich, Germany, May 10, 2009.

[T74] "New Technologies for Audio over IP". Panel presentation in Workshop of the Audio Engineering Society Convention, Munich, Germany, May 10, 2009.

[T75] "A Platform to Create and Support Ocean Science Virtual Organizations (Oceans 2.0)" and "HSVO Health Services Virtual Organization", RISQ 2008 Colloquium, Montreal, November 14, 2008.

[T76] "The Future of VC: Music Teaching and High Fidelity Video", Elevate 2008: Reaching New Heights in Educational Video-conferencing, Banff, August 27–28, 2008.

[T77] "Creating an immersive video space", International Symposium on The World Opera: When the Opera stage becomes worldwide, Tromsø, Norway, May 9, 2008.

[T78] "Multimodal Streaming and Distributed Audio Interaction", High Quality Audio over Networks (ANET II) Summit, Banff Centre, April 12, 2008.

[T79] "Music and Games: How Fun Applications Stimulate Core Technologies", Canadian University Software Engineering Conference, January 19, 2008.

[T80] "From Teleoperation to Teleimmersion: Design Challenges for Distributed Interaction", Canadian University Software Engineering Conference, January 19, 2007.

[T81] "CANARIE sur UCLP et ROADM, deux technologies qui changent le monde des télécoms", Round Table panel, RISQ Annual Conference, Quebec City, October 16, 2006.

[T82] "La recherche sur en ultra-videoconference", Panel on "Vitrine technopédagogique sur la vidéoconférence", RISQ Annual Conference, Quebec City, October 16, 2006.

[T83] "Broadband transmission of multimodal content at the Centre for Interdisciplinary Research in Music Media and Technology (CIRMMT)", RISQ-CA*net4 Advanced Networking Day, Montreal, October 24, 2005.

[T84] "Low-Latency Ultra-Videoconferencing and Shared Reality" Interfaces Montreal, Rencontre du Génie numérique et des Affaires. Montreal, October 11, 2005.

[T85] "Shared Spaces" Asia-Pacific Advanced Networks (APAN) Conference, Taipei Aug. 22–27, 2005.

[T86] "Engaging Technolog(ies) for Effective Interaction" Keynote speaker, World Conference on Educational Multimedia, Hypermedia and Telecommunications, Montreal, June 29, 2005.

[T87] "Broadband Distance Education in 2007: Views from the Demand Side" Invited Panelist. World Conference on Educational Multimedia, Hypermedia and Telecommunications, Montreal, June 29, 2005.

[T88] "Ultra-Videoconferencing and Intelligent Classrooms" Keynote speaker, Canadian Higher Education and Information Technology Conference, Montreal, June 28, 2005.

[T89] "From Videoconferencing to Shared Reality" Bell University Laboratories' Annual Conference, Toronto, November 3, 2004.

[T90] "History of Internet Audio Experiments at McGill" High Quality Audio over Networks (ANET) Summit, Banff Centre, August 20–22, 2004.

[T91] "Advanced Video Applications: Developments in Extreme Video" Southeastern Universities Research Association Video Development Initiative (SURA/ViDe) 6th Annual Digital Video Workshop. Indianapolis, March 24, 2004.

[T92] "The Democratic Revolutions – Peer to Peer Meets Open Source: Design, Philosophy, Engineering" Intimate Technologies/Dangerous Zones. Banff New Media Institute, Banff Centre, April 27, 2002.

[T93] "The Development of Ultra VC Applications and Technology" Southeastern Universities Research Association Video Development Initative (SURA/ViDe) 4th Annual Digital Video Workshop. University of Alabama at Birmingham, April 25, 2002.

[T94] "High quality wide-screen SDI video and multichannel audio over CA*net3" CANARIE's 7th Advanced Networks Workshop, Toronto, November 28, 2001.

[T95] "Low-latency comes to videoconferencing: The Frères Jacques duet at a distance" RISQ 2001 Conference, Montreal, November 5, 2001.

[T96] Advanced Networking and the Arts: Innovations in Outreach, Collaboration, and Performance. Panel Discussion at Internet Global Summit INET 2001 Conference, Stockholm, June 6, 2001.

[T97] "The McGill–Calgary Advanced Learnware Network" CANARIE's 6th Advanced Networks Workshop, Montreal, November 29, 2000.

[T98] "Networks and Music Instruction" Panel Discussion with Pinchas Zukerman and Wieslaw Woszczyk, CANARIE's 6th Advanced Networks Workshop, Montreal, November 29, 2000.

[T99] "Tools for Distributed VR" Canadian Working Group on Virtualized Reality Systems, Montreal, November 28, 2000.

[T100] "Evolution of the Intelligent Classroom" Multicultural Perspectives on the use of Technology in Education. Montreal, October 2, 2000.

[T101] The Brave New World of Ubiquitous Bandwidth" Internet Global Summit INET 2000 Conference, Yokohama, July 20, 2000.

[T102] "Multichannel Audio over the Internet: The Next Phase" RISQ 2000 Conference, May 31, 2000.

[T103] "Multichannel Audio over the Internet" CANARIE's 5th Advanced Networks Workshop, Toronto, November 29, 1999.

[T104] "When Telemedicine feels like Regular Medicine" Communications and Information Technology Ontario (CITO) Healthcare for the Future: Telemedicine, February 18, 1999.

Media Exposure

[M1] Ami-Télé, Ça me regarde, February 8, 2018

[M2] Forbes, March 9, 2017

[M3] Discovery Channel, Daily Planet, Mar. 7, 2017

[M4] Télé-Québec, Electrons Libre, Jan. 17, 2017

[M5] ACB Radio, Mainstream, Nov. 18, 2016

[M6] CBC Radio, Tech Column, Aug. 8, 2016

[M7] CJAD Radio, Tech Talk, Aug. 6, 2016

[M8] Mobile Syrup, Aug. 4, 2016

[M9] CBC News, Aug. 4, 2016

[M10] Betakit, Aug. 3, 2016

[M11] Accessible Media Inc., Live from Studio 5, Aug. 2, 2016

[M12] La Presse, Jul. 31, 2016

[M13] CTV News, Jul. 29, 2016

[M14] Stevivor, Mar. 2015

[M15] Venture Beat, Mar. 3, 2015

[M16] Club Social (TV5), Feb. 4, 2011

[M17] Global TV (National), Jan. 29, 2009

[M18] Global TV (Montreal), Jan. 27, 2009

[M19] CBC Radio, As it Happens, Jan. 27, 2009

[M20] National Post, Jan. 27, 2009

[M21] Montreal Gazette, Jan. 27, 2009

[M22] Montreal Gazette, Feb. 20, 2009

[M23] Inside Higher Education, Sept. 3, 2008

[M24] CBC Radio (Daybreak), Sept. 3, 2008

[M25] CJAD radio, Sept. 2, 2008

[M26] Cabling Networing Systems, Jan. 2006

[M27] McGill Reporter, Nov. 24, 2005

[M28] CTV Quebec, Global News, Dec. 23, 2002

[M29] New York Times, Technology Section, Dec. 19, 2002

[M30] Discovery Channel, Daily Planet, Oct. 30, 2002

[M31] CFCF (CTV Quebec) Global News, June 19, 2002

[M32] National Post, June 15, 2002

[M33] CBC Television, The National, May 3, 2002

[M34] McGill Reporter, Learning the Strings, April 11, 2002

[M35] Ottawa Citizen, March 29, 2002

[M36] Montreal Gazette, March 27, 2002

[M37] Globe & Mail, Dec. 1, 2001

[M38] Canal Z, La Revanche des Nerdz, Nov. 13, 2001

[M39] Montreal Gazette, Nov. 10, 2001

[M40] CJAD Radio, The World Today, July 31, 2001

[M41] McGill Reporter, April 5, 2001

[M42] Globe & Mail Report on Business, Oct. 28, 2000

[M43] TQS Double Clic!, Oct. 7, 2000

[M44] McGill Reporter, Sept. 21, 2000

[M45] UPath.com, Vol 40, 2000

[M46] CBC (Montreal) Home Run, Aug. 22, 2000

[M47] Montreal Gazette, Aug. 22, 2000

[M48] CFCF (CTV Quebec) Pulse News, Aug. 21, 2000

[M49] CBC Radio The Arts Report, July 20, 2000

[M50] Elle Quebec, June 2000

[M51] Journal Le Monde des Affaires, May 2000

[M52] Canal Z, Technofolie, May 3, 2000

[M53] TQS Double Click, April 29, 2000

[M54] McGill Reporter, April 6, 2000

[M55] Briefing Digital, April 2000

[M56] Interface: La Revue de la Recherche, Vol. 21, No. 2, March-April 2000

[M57] American Society of Mechanical Engineers, Mechanical Advantage, Vol 9, No 3, March 2000

[M58] Canal Z, La Revanche des Nerdz, Feb. 2000

[M59] CFCF (CTV Quebec) Pulse News, Feb. 29, 2000

[M60] Canal Vox: CityMag, Jan. 15, 2000

[M61] Montreal Mirror, Jan. 6, 2000

[M62] Plan Mega: La revue du genie québecois, Ordre des ingenieurs du Québec. Vol 1, Jan. 2000

[M63] Radio Corporation of Singapore: Science and Technology Watch, Dec. 1999

[M64] Radio Canada (CBC French) Les Annees lumiere, Nov. 28, 1999

[M65] Financial Times Life/Technology, Nov. 25, 1999

[M66] CBC Radio: As it Happens, Nov. 22, 1999

[M67] Journal de Montreal, Nov. 19, 1999

[M68] Le Devoir, Nov. 18, 1999

[M69] TVA CyberClub, Nov. 13, 1999

[M70] La Presse, Sept. 26, 1999

[M71] CJAD Radio, April 11, 1999

[M72] Montreal Mirror, April 8, 1999

[M73] McGill Reporter, Jan. 14, 1999

[M74] High-Tech Shower International, Nov. 26, 1997

[M75] CBC Newsworld "Futureworld", Oct. 5, 1996

[M76] Discovery Channel, Sept. 18, 1996

[M77] Toronto Star, Sept. 15, 1996

[M78] University of Toronto Varsity, Sept. 3, 1996

[M79] TV Ontario "Studio Two", June 26, 1995

Research Supervision

Research Professionals

Name	Period	Project title	Present Position
Yousef, Shahd	Sep 2024–	server-side developer, IMAGE project	
Singh, Jaydeep	Sep 2021–	web developer, IMAGE project	
Novack, Kaylee	Sep 2021–Apr 2022	medical doctor researcher on Avatar Therapy project	Medical Resident, Université de Montréal
Kuo, Cyan	Aug 2021 – Dec 2023	Usability Research Lead, IMAGE project	
Patil, Gandharv	Jun 2021 – Mar 2022	ML Research Lead, IMAGE project	PhD student, McGill
Grond, Florian	Apr 2021 – Mar 2023	Audio Research Lead, IMAGE project	Assistant Professor, Concordia University
Eichhorn, Alexander	Feb 2013 – Aug 2013	research associate under GRAND	CTO of Kidtsunami
Bouchard, Mathieu	Jan 2011 – Nov 2018	research assistant under MSG project	
Chen, Guangyi	Jan 2010 – Jul 2010	research associate under Canarie NEP	
Vincent, Coralie	Oct 2010 – Mar 2011	research assistant	Research Engineer, IRCAM, France
Dansereau, Don	Jun 2009 – Jan 2010	research associate under FRQNT grant	Senior Lecturer, University of Sydney
To, Long	Jan 2009 – Sep 2011	research associate under NSERC I2I	Software engineer, Abcam

Continued on next page

Name	**Period**	**Project title**	**Present Position**
Blum, Jeff	Oct 2008 – Aug 2013	research assistant under MSG project	
Olmos, Adriana	Sep 2008 – July 2012	user interface engineer under Canarie NEP	Interaction designer, Google/YouTube
Sun, Haijian	Sep 2008 – Oct 2010	computer engineer under Canarie NEP	ECM Consultant, JCDS Solutions Inc.
Soukhodolski, I.	Oct 2005 – Dec 2007	web services programmer under Canarie IIP	Owner, W4 Technology
Kiewe, Howard	Oct 2005 – Dec 2007	user interface developer under Canarie IIP	consultant
Spackman, S.	2000–2006	research associate on Canarie and VRQ projects	Google, Mountain View
Sarikaya, Deniz	2003–2004	research assistant on VRQ projects	deceased
Soucy, Gilbert	1999	research associate on CFI project	Imaging Specialist, 36pix Inc., Montreal

Post-doctoral Fellows

Name	**Period**	**Project title**	**Present Position**
Byeon, Yeong-Hyeon	Jan 2024 – Nov 2024	Bionic Ear Project	
Bouzekri, Élodie	Sep 2023 – Aug 2024	ADAIR Project	Assistant Professor, Université de Bretagne Occidentale
Fontana De Vargas, Mauricio	Jan 2023 – Nov 2023	Ai-Digital Nurse Avatar (ADiNA)	AI+VR Research Scientist, Meta, Toronto
Sullivan, John	Sep 2021 – Apr 2022	Multimodal Rendering for the IMAGE Project	post-doctoral fellow, Université Paris-Saclay
Jyoti, Vishav	Mar 2021 – Feb 2022	Mixed-Reality Platform for Simulation and Synthesis of Multi-Modal Hallucinations	Software Engineer, Youtube, India
Talhan, Aishwari	Jan 2021 – Dec 2022	Wearable Haptics	Research Scientist, SUNY Research Foundation, Albany, New York
Yoo, Yongjae	Mar 2020 – Jul 2022	Wearable Haptics and Haptics Lead, IMAGE project	Assistant Professor, Hanyang University ERICA, South Korea
Weill-Duflos, A.	Jan 2018 – Jan 2021	Wearable Haptics	Director of Research and Product Integration, Haply Robotics
Arnold, Andre	Oct 2017 – Dec 2017	Wearable Haptics	Product Manager – AI Nuvoola

Continued on next page

Name	**Period**	**Project title**	**Present Position**
Panëels, S.	Jan 2011 – Jan 2012	Natural Interactive Walking and In-Situ Audio Services	Researcher, Commissariat à l'énergie atomique et aux énergies alternatives (CEA)
Pelletier, S.	Nov 2009 – Jun 2011	Real-time Image-based Rendering (Canarie NEP, 2009-2010)	
		Parallax Barrier Display rendering software optimization (NSERC ENGAGE, 2011	Game Programmer, Behaviour Interactive
Otis, Martin	Jan 2010 – Dec 2010	Natural Interactive Walking (FRQNT Scholarship)	Assoc. Professor, U. Québec à Chicoutimi
Millet, G.	Nov 2009 – Mar 2012	Natural Interactive Walking	Patent Examiner, EPO, The Hague
Bouillot, Nicolas	Sep 2007 – Dec 2011	Mobile Audio Interaction (NSERC New Media Initiative, 2007-2009)	
		Open Orchestra (Canarie NEP-2 Project)	Co-Founder - Lab148
Darolti, Cristina	Jan – Dec 2009	Real-time Image-based Rendering (Canarie NEP)	Patent Examiner, EPO, The Hague
Wang, Guangyu	Sep 2007 – Mar 2011	Neurosurgical Visualization and Virtual Presence (NSERC Strategic and NCE)	Facebook, Mountain View
Wang, Yan	2002–2003	Channel and spatial view allocation for videoconferencing (VRQ)	V.P. Marketing, AMH Canada

Ph.D. Students

Name	Period	Thesis title	Present Position
Riazifar, Myles	Jan 2025–present	Advanced Airspace Usability	
Pinheiro de Oliveira, Henrique Jongh	Mar 2024–present	Orchestrating LLMs for blind and low-vision users, Cotutelle student with Universidade Federal do Rio Grande do Sul	
Kuo, Cyan	Jan 2024–present	Multimodal Perception in Sensory Substitution Frameworks	
Knappe, Sabrina*	Jan 2023–present	Advanced Airspace Usability	
Samuel, Segun*	Jan 2023–present	Spatial content representation strategies for blind and low-vision users	
Conan, Corentin*	Sep 2022–present	Advanced Airspace Usability	
Astles, Samantha*	Sep 2022–Jan 2024	Advanced Airspace Usability	
Shen, Lichao*	Oct 2021–Aug 2023	Social telepresence	
Regimbal, J.*§†C	Sep 2021–present	Audio-haptic authoring for information rich content delivery	
Fortin, P.*§	Sep 2016–Sep 2021	Methods and Interfaces for Closed-Loop Smartphone Communications	Asst. Professor, U. Québec à Chicoutimi
Blum, Jeff*†g	Sep 2013–present	Implicit Communication for Enriched Human Interaction	
Erfani-Joorabchi, M.*	Jan 2013–Jan 2015		iOS Software Engineer, Google

Continued on next page

Name	**Period**	**Thesis title**	**Present Position**
Anlauff, Jan*	Jan 2011–present	Sensor-Actor Wearables	
Tordini, F.	Jan 2011–Feb 2018	Auditory salience modeling for continuous processes sonification	Technology Transfer Manager, Innovation and Partnerships, McGill University
Ghourchian, N.*†	Jan 2010–Apr 2011	Affective Evaluation	transferred to another group
El-Shimy, D.†	Jan 2009–Nov 2014	Reactive Environment for Network Music Performance	Director of UX Research, WISE, London UK
Benovoy, M.†	Oct 2007–Aug 2010	Biosignals analysis	transferred to another group
Visell, Yon	Sep 2005–Mar 2011	Walking on virtual ground: physics, perception, and interface design	Assistant Professor (ECE), UC Santa Barbara
Qi, Zhi	Jan 2004–Dec 2008	Towards dynamic mosaic generation with robustness to parallax effects	Associate Professor (School of Electronic Science & Engineering), Southeast University, China
Pelletier, S.^{p}	Jan 2003–Oct 2009	Acceleration methods for image super-resolution	Game Programmer, Behaviour Interactive
Yin, Jianfeng	Sep 2000–Aug 2008	Toward an Alternative Approach to Multi-Camera Scene Reconstruction	Software engineer, Geomagical Labs
Sun, Wei	2002–2006	Multi-camera Object Segmentation in Dynamically Textured Scenes Using Disparity Contours	Apple Inc., Cupertino

Continued on next page

Name	**Period**	**Thesis title**	**Present Position**
Cayouette, F.[†]	2003–2006	human tracking (withdrew from program)	Generalist Programmer, Reflector Entertainment
Arseneau, S.	2000–2006	Representing Junctions through Asymmetric Tensor Diffusion	Chief Technology Officer, MVP, Austin

[*] McGill Engineering Doctoral Award recipient
[†] NSERC PGS D Scholarship recipient
[†C] NSERC CGS D Scholarship recipient
[§] FRQNT Scholarship recipient
[g] Graphics Animation and New Media (GRAND) Scholarship recipient
[p] Precarn Scholarship

Additional Ph.D. Supervisory Service

I co-supervised a portion of the thesis work of the following students:

- Du, Xiaoxi (Sep 2023-Aug 2024), visiting student from Southeast University, Nanjing, China
- Mousavi, Mastoureh (Sep 2023-), visiting student from Azad University, Tehran, Iran
- Liu, Xian (Nov 2013-Dec 2015), visiting student from University of Electronic Science and Technology, China
- Xie, Meng (Sep 2012-Mar 2014), visiting student from Beijing University of Aeronautics and Astronautics, China
- Grond, Florian. (Jul-Dec 2010), visiting student from Bielefeld University, Germany
- Zambon, S. (Jul-Oct 2010), visiting student from Verona University, Italy
- Cirio, Gabriel (Jun-Aug 2010), visiting student from INRIA-IRISA, France
- Rizutti, Costantino (Sep-Oct 2008), visiting student from Università della Calabria, Italy
- Bossi, Eugenia (Oct 2008), visiting student from Università della Calabria, Italy
- Pellerin, Romain. (Jun-Sep 2008), visiting student from Conservatoire Nationale des Arts et Métiers, France
- Cupellini, Enrico (Jul-Aug 2007), visiting student from Università della Calabria, Italy
- Usher, John (2003-2004), Ph.D. student, Faculty of Music, McGill University
- Mohammadi, M. (Feb-Aug 2004). visiting student from Sharif University, Iran

I served as external reviewer or examiner of the following theses:

- Mauricio Fontana de Vargas, School of Information Studies, McGill University (2022)

- Richard Olayniyan, Department of Computer Science, McGill University (2021)
- Xavier de Tingu, Université Rennes, France (2020)
- Damien Brun, Le Mans Université, France (2020)
- Cheryl Savery, Queen's University (2014)
- Alexandre Plouznikoff, École Polytechnique de Montréal (2009)
- Xiaoyong Sun, School of Information Technology and Engineering, University of Ottawa (2007)
- Nicolas Bouillot, Conservatoire Nationale des Arts et Métiers, France (2006)
- Harold Okai-Tettey, Computer Science, Rhodes University, South Africa (2006)

I served on the supervisory and/or examination committees of the following students:

- Department of Electrical and Computer Engineering: Edouard Antoniou, Oliver Astley, Carmen Au, Marc Boulé, Wei Chu, Olivier St-Martin Cormier, Vincent Levesque, Muhua Li, Rui Ma, Dante De Nigris Moreno, Jun Ouyang, Jerome Pasquero, Andrew Phan, Ala Qumsieh, Harkirat Sahambi, Wei Sun, Yick Kei Wong, Dingrong Yi, Olivier St-Martin Cormier, Karl Fayad, Shalaleh Rismani, Lixiao Zhu, Amir Abbas (2023), Haji Abolhassani (2024)
- Department of Mechanical Engineering: Zahir Albadawi, Omar Wyman, Ehsan Yousefi
- Department of Biological and Biomedical Engineering: Alireza Heidari
- School of Physical and Occupational Therapy: Jackie Girgis
- School of Information Studies: Xiaofeng (Allan) Yong
- Faculty of Music: Jason Corey, Cory McKay, Caroline Medeiros, Sean Olive, Dale Stammen, Vanessa Yarmechuk, Mark Zadel
- Grad. School of Library and Information Studies: Charles-Antoine Julien
- Department of Educational Psychology and Counselling: Adam Finkelstein
- School of Computer Science: Paul Haroun, Wisam Al Abed

Masters Students

Name	Period	Thesis title	Present Position
Wang, Melody	Jan 2025–	TBD	
Jabbari, Kasra	Jan 2025–	TBD	
Pan, Edina	Sep 2024–	TBD	
Li, Yuancao	Sep 2024–	TBD	
Dhanania, Mansi[◇]	Sep 2024–	TBD	
Buller, Abigail[◇◇†C]	Sep 2023–	Haptic displays for multi-patient vital sign monitoring	
Karve, Anay	Sep 2023–	ADvanced AIRspace Usability	
Naik, Khushi	Sep 2023–	Graphical displays for multi-patient vital sign monitoring	
Zou, Yichen	Sep 2023–	Bionic Ear	
Li, Heyang[§]	Jan 2023–	Emotion recognition and expression for ADiNA	
Fu, Jano	Jan 2023–	Dynamic multimodal chart representations for individuals who are blind	
Bazin, Romain	Sep 2022–Dec 2024	Leveraging Large Language Models for Automated Chart Summarization	
Quadros, Venissa Carol	Sep 2022–	Authoring of Audio-Tactile Content for Refreshable Tactile Displays	
Aubet, Antoine	Sep 2022–	Computationally efficient dynamic spatial audio rendering for distributed musical performance	
Liu, Yujing	Sep 2021–2024	Design and Implementation of Conversational Humanoid Avatars for Healthcare Applications	

Continued on next page

Name	**Period**	**Thesis title**	**Present Position**
Wilson, É.	Sep 2021–Sep 2024	Representations for the Blind of Depth Information in Photographs	Technical Product Coordinator, Haply Robotics
Duarte, Nathan◇◇	Sep 2021–Aug 2023	Deploying wearable sensors for pandemic mitigation	Senior Associate, Boston Consulting Group
Henry, Max	Sep 2021–	Spatial-aware audio rendering for immersive telepresence	
Lewis-Lane, Jonathan	Sep 2021–Aug 2023	Haptic Interfaces for Musical Notation and Expression	Haptics Engineer, Apple Computer
Akut, Rohan	Jan 2021–Jul 2023	Enriching AI-based Image Descriptions for People who are Vision-Impaired	Machine Learning Engineer, iCAD Dental
Gannavarapu, S.	Sep 2020–Dec 2023	Haptic Perception and Multimodal Maps for the Visually Impaired	
Isran, Rayan	Sep 2020–Aug 2023	Investigating Audio-Haptic Rendering Methods To Deliver Chart Information to Blind and Low-Vision Individuals	Mechatronics Software Engineer, Bombardier Recreational Products
Kirby, Linnea	Sep 2020–	The Implications of Technology-Augmented Circus in Training, Performance, and Interdisciplinary Research	
Knappe, Sabrina	Sep 2020 – Dec 2022-	Towards a User Interface for Audio-Haptic Exploration of Internet Graphics by People who are Blind and Partially Sighted	Ph.D. student (see above)
Regimbal, J.	Sep 2020 – Aug 2021	Haptic effects authoring in artistic and utilitarian contexts	(fast-tracked to Ph.D. program)

Continued on next page

Name	**Period**	**Thesis title**	**Present Position**
Ducher, Clara	Sep 2019 – Sep 2021	GAN-based interaction paradigms for photorealistic avatar creation (McGill nominee for Northeastern Association of Graduate Schools Distinguished Thesis Award)	Research Software Engineer, European Centre for Medium-Range Weather Forecasts
Marino, David	Sep 2019 – Nov 2021	Implicitly Conveying Emotion While Teleconferencing	R&D Scientist, Hitachi Energy, Montreal
Lee, Hyejin	Sep 2019 – Apr 2022	Generating Convincing Simulation of Internalized Voices for Human-avatar Interaction	Full-stack developer, Société Générale, Montreal
Li, Yaxuan	Sep 2019 – May 2022	Towards Context-aware Automatic Multimodal Haptic Effect Generation for Home Theatre Environments	Ph.D. student, U. Michigan
Bouanane, Y.	Jan 2019 – Dec 2020	EchoDepth: Using a depth camera and sonification for blind navigation	Entrepreneur, sktch.io
Demers, Marc	Sep 2018 – Mar 2021	A Data-Driven Strategy for Evaluating Tacton Perceptual Similarity	Data Scientist, Maxen Technologies
Vyas, Preeti	Sep 2017 – Apr 2020	Foot-based Haptic Interfaces for Numeric Information Delivery and Dance Learning	Ph.D. student, UBC
Sulmont, E.	Sep 2017 – Dec 2018	Improved Learning of Machine Learning by Non-Majors	Curriculum Manager, DataCamp
Patil, Gandharv	Jan 2017 – Dec 2019	Min-Max Inverse Reinforcement Learning for learning bi-modal dialogue policies	Ph.D. student, McGill
Girgis, Roger	Sep 2016 – Apr 2019	Assessing the Use of Deep Learning in Assisting Visually Impaired People with Outdoor Exploration	Ph.D. student, MILA

Continued on next page

Name	**Period**	**Thesis title**	**Present Position**
Kim, Taeyong	Sep 2016 – Aug 2019	Exploration of foot based interaction for menu control and virtual reality applications	HRI Researcher, Hyundai Robotics
Alirezaee, P.	Sep 2016 – Dec 2019	Multimodal approaches to improved hospital alarms	Product Designer, Unity Technologies
Diaz, Manfred	Sep 2016 – Aug 2017	Interactive and Uncertainty-Aware Imitation Learning	Ph.D. student, MILA
Ahmer, Z.	Jan 2016 – Jan 2019	Automated musical accompaniment to children's stories	
Yin, G.	Sep 2015 – Oct 2018-	Augmented Reality Tools for Workplace Safety	Software Engineer, Kooltra
Fortin, P.	Sep 2015 – Aug 2016	Physiological Perception of Tickling Sensation	(fast-tracked to Ph.D. program)
Horodniczy, D.†	Sep 2014 – Dec 2016	Characterization and Application of a Variable-Friction Foot Device	Software Developer, Philips Innovative Imaging Technologies
Vuibert, Vanessa	Sep 2013 – Aug 2015	Efficient and Accurate Performance with Unconstrained Mid-air Interaction	Software Developer, Guavus
Hieda, Naoto	Sep 2012 – Aug 2015	Digital Video Projection for Interactive Entertainment	PhD student, Tallinn University, Estonia
Viswanathan, R.	Jan 2010 – Dec 2012	Testing the Two-Stream Hypothesis in an Immersive Virtual Environment	Senior Software Developer, Faurecia Irystec Inc
Knight, Trevor	Jan 2010 – Sep 2011	Music Visualization for Open Orchestra (CIRMMT Student Award)	Software Developer, Noteloop Systems
Li, Weizhong	Sep 2008 – May 2009	(recommended alternative supervision)	

Continued on next page

Name	**Period**	**Thesis title**	**Present Position**
Ip, Jessica	Sep 2008 – Mar 2011	Augmented Reality for Interactive Play in a Virtual and Physical Environment	iOS developer, Shopify, Toronto
Namit, Gaurav	May 2008 – Oct 2009	(withdrew in 2009 to pursue social entrepreneurship venture)	
El-Shimy, D.	Sep 2007 – Dec 2008	Gestural interaction for complex tasks	(fast-tracked to Ph.D. program)
Law, A.	Sep 2007 – Sep 2010	A Vibrotactile Floor for Enabling Interaction through Virtual Walking Spaces	Data Systems Engineer, AECOM, Vancouver
Benovoy, M.	Sep 2006 – Oct 2007	Biosignals analysis and its application in a performance setting	(fast-tracked to Ph.D. program)
Audet, Samuel†	2005-2007	Shadow Removal from Multi-Projector Displays via Three-Dimensional Modeling and Object Tracking	Deeplearning4j (Skymind), Tokyo, Japan
Wozniewski, M.	2003-2006	A framework for interactive three-dimensional sound and spatial audio processing in a virtual environment	research engineer, Societé des arts technologiques, Montreal
Rudzicz, Frank§	2004-2006	CLAVIUS: Understanding Language Understaing in Multimodal Interaction	Associate Professor, University of Toronto (status) and Dalhousie University
Rioux, Francois†	2003-2005	Software Framework for Parsing and Interpreting Gestures in a Multimodal Virtual Reality Context	Ph.D., Laval; Software Architect, Thales Canada
Chan, Siu-Chi	2002-2005	Hand and Fingertip Tracking for Gesture Recognition	Technical Staff, AMD Toronto
Hilario, Nadia§	2002-2005	Occlusion Detecion in Front Projection Environments	Software Developer, Spiria

Continued on next page

Name	**Period**	**Thesis title**	**Present Position**
Perez, Michael	2002-2005	Multimodal Human-Computer Interaction for a Public Kiosk System	User Interface Designer, Nuance
Sud, Daniel	2002-2005	Design of a Multi-Projector Display System	Senior Producer, Lucky Hammers
Boussemart, Y.	2002-2005	Design and Implementation of Framework for Immersive Environments in a Shared Context	Chief Technology Officer, Xerxes Global
Pelletier, S.	2001-2003	High-Resolution Video Synthesis from Mixed-Resolution Video Based on the Estimate-and-Correct Method	(see above)
Gu, Jinhua	2000-2002	A distributed software architecture for the Shared Reality Environment.	VP, Radian Asset Assurance Inc., NY
Yao, Jie	2000-2002	Human Arm Gesture Detection and Recognition in a Classroom Environment.	Ph.D. student, Concordia University
Zhang, Yuan	2000-2002	An efficient coding method for spatial data: the rotating, hierarchical, overlapping representation.	Ph.D. student, University of Delaware
Doutriaux, S.	1998-1999	(withdrew in 1999 to launch start-up company)	
Arseneau, S.	1998-2000	Robust Image Segmentation Towards an Action Recognition Algorithm.	(see above)
Xu, Aoxiang	1998-2000	A High-Performance Audiovisual Communication System.	QNX Software Systems, Ottawa

† NSERC PGS M Scholar recipient
†^{C} NSERC CGS M Scholar recipient
§ FRQNT Graduate Scholarship recipient
◇ McCall MacBain Scholar finalist
◇◇ McCall MacBain Scholarship recipient

Additional Masters Supervisory Service

I co-supervised a portion of the thesis work of the following students:

- Marcé, Clément (Jul-Aug 2024), visiting student from INSA (Toulouse)

- Albert, Nicolas (Jan-Jun 2024), visiting student from École Polytechnique Fédérale de Lausanne, Switzerland
- Peña Cortés, Dafne Vania (Nov 2023-present), School of Engineering and Sciences, Tecnológico de Monterrey, Mexico
- Dever, Ani (Sep 2017-Feb 2018), visiting student from Polytechnic University of Turin, Italy
- Gallo, Nicola (Sep 2015-Feb 2016), visiting student from Polytechnic University of Turin, Italy
- Roy, Louise (Jul-Dec 2015), visiting student from Ensimag, Grenoble, France
- Glesser, David (Feb-Jun 2012). visiting student from Ensimag, Grenoble, France
- Penin, O. (Jul-Aug 2011). visiting student from Paris-Sud 11, France
- Mabire, N. (Apr-Sep 2010). visiting student from Supélec, Metz, France
- Brulé, M. (Feb-Aug 2009). visiting student from Université de Louis Pasteur, Strasbourg, France
- Anlauff, J. (Dec 2008-Mar 2009). visiting student from Bielefeld University, Germany
- Delattre, G. (Apr-Aug 2007). visiting student from Université Paris VI, France

I served on the supervisory and/or examination committees of the following students:

- Zhonghao Zhao (M. Eng. project), Electrical and Computer Engineering, McGill University
- Anne-Marie Burns, Faculty of Music, McGill University
- Frank Riggi, Electrical and Computer Engineering, McGill University
- Eric Benzacar, Electrical and Computer Engineering, McGill University
- Oles Protsiym, Faculty of Music, McGill University

Funding

Individual Research Grants and Contracts

Date	Source	Amount	Title/Description
2024-2029	NSERC	$275,000	*Multimodal information communication to overcome environmental, sensory, and computer mediation limitations* Discovery grant
2024	HBHL/ HumanWare	$270,867	*Advancing IMAGE Support for the HumanWare/APH Monarch* Healthy Brains, Healthy Lives (CFREF) + McGill I+P with partner organization HumanWare
2024-2025	MEDTEQ/ NSERC	$268,115	*Improving Intelligibility of Speech in Noisy Environments* MEDTEQ Partenar-IA and NSERC Alliance funding
2023	Humanware	$33,600	*Prototype experience for IMAGE content on the Monarch* Research contract
2023-2024	MEDTEQ/ HBHL	$282,188	*Haptic devices for conveying non-textual visual information on the internet for individuals with vision loss.* MEDTEQ Partenar-IA (Ministère de l'Économie, de l'Innovation et de l'Énergie) and Healthy Brains, Healthy Lives (CFREF)
2022	HBHL	$50,000	*Extending Internet Multimodal Access to Graphical Exploration.* Healthy Brains, Healthy Lives (CFREF) Neuro Commercialization Ignite Grant
2022	Meta	$30,000	Unrestricted gift
2021	Mitacs	$13,333	*Analyse et recherche d'optimisation d'un processus d'adaptation de contenu issu de la numérisation 3D à un contenu photo-réaliste et interactif.* Mitacs Accelerate – Intern: Chen, Hongjun
2021-2022	ISED	$608,594	*Enabling Access to Graphical Image Content Published via the Internet for People Who Are Blind, Deaf-Blind or Visually Impaired.* Innovation, Science and Economic Development Canada (ISED), Accessible Technology Program (Total project budget of $765,787)
2019-2021	NSERC/ MEDTEQ	$374,366	*Mixed-Reality Platform for Simulation and Synthesis of Multi-Modal Hallucinations with Applications to Schizophrenia Treatment.* Collaborative Research and Development Grant with Industrial Partners, iMD Research and IA Précision Santé Mentale
2019	NSERC	$25,000	*360 degree imaging for navigation assistance for the visually impaired.* Engage Grants Program with Industrial Partner, ImmerVision.

Continued on next page

Date	Source	Amount	Title/Description
2019	Mitacs	$15,000	*Advanced sensor control implementations for energy optimization in commercial buildings using machine learning and data visualisation applied to building automation systems.* Mitacs Accelerate – Intern: Demers, Marc
2019	Mitacs	$6,000	*Facilitating Human Interaction with a Robotic Exercise Coach using Smart Objects.* Mitacs Globalink – Intern: Vyas, Preeti
2018	Mitacs	$6,000	*Mobile Remote Implicit Communication.* Mitacs Globalink: Intern: Blum, Jeff
2018	NSERC	$25,000	*Educational wine recommendations from initially sparse data.* Engage Grants Program with Industrial Partner, Wineout Inc.
2017-2018	McGill	$7500	*Physiological confirmation of stimulus reception.* Faculty of Engineering TechAccelR Grant
2017-2020	NSERC	$631,650	*Wearable Haptics.* Collaborative Research and Development Grant with InterDigital Corporation
2017-2018	CIRA	$44,500	*Intelligent Agent for the Visually Impaired: Vision-based scene description and contextual awareness for Autour.* Canadian Internet Registry Authority .CA Community Investment Program
2017-2022	NSERC	$ 222,000	*Multimodal Influences on Perception and Action in Computer-Mediated Environments.* Discovery grant.
2017-2018	MSP	$177,673	*Social Media Monitoring Architecture.* Research Contract with Ministère de la Sécurité publique
2015	CIRA	$53,878	*What's Around Me? Conveying Environmental Awareness to the Visually Impaired Community.* Canadian Internet Registry Authority .CA Community Investment Program
2014-2015	Mitacs	$15,000	*Effect of Mobile Technologies in Emergency Response.* Mitacs Accelerate – Intern: Erfani-Joorabchi, Minoo
2014	NSERC	$25,000	*Haptic user experience delivered through the shoes.* Engage Grants Program with Industrial Partner, InterDigital Canada
2013-2014	NSERC	$137,474	*3D immersive projection infrastructure with full-body motion capture and analysis.* Research Tools and Instruments Grants
2012-2013	Mozilla	$50,000	*Real-Time Emergency Response.* Mozilla Ignite Development Challenge (in partnership with the National Science Foundation)
2012-2017	NSERC	$210,000	*Improved Shared Reality for Multi-Party, Multimodal Simulation and Interaction.* Discovery grant.

Continued on next page

Date	Source	Amount	Title/Description
2012	Toyota	$30,000	*Haptic interaction with an augmented steering wheel.* Toyota Infotechnology Centre
2011	HP	$60,950	*Capturing attention via spatialized audio cues.* HP Labs Innovation Research Program (IRP)
2011	NSERC	$25,000	*Improved Parallax Barrier Autostereoscopic Display Software.* Engage Grants Program with Industrial Partner, Holoptick Technologies Inc.
2010-2011	Google	$50,000	*A Spatialized Audio Map System for Mobile Blind Users.* Google Faculty Research Awards.
2010-2011	Honda	$30,000	*Facial Expression Recognition for Machines.* Honda Research Institute.
2010	UVic	$8,000	*NEPTUNE Pleora streamer.* University of Victoria software license
2008-2012	MDEIE	$367,195	*Natural Interactive Walking.* Support for International Research and Innovation Initiatives, Ministère du Développement économique, de l'Innovation et de l'Exportation; for Canadian participation in EU FP-7 program with partners in France, Italy, and Denmark.
2007-2010	MDEIE	$15,000	*Un environment virtual pour la création de musique et de son à partir de systèmes chaotiques.* Support for International Research and Innovation Initiatives, Ministère du Développement économique, de l'Innovation et de l'Exportation.
2006-2009	NSERC	$317,785	*A pervasive multi-user augmented space for mobile immersive interaction with sound and music.* (additional funding for artist collaborator received from Canada Council for the Arts) New Media Initative STPGP 337999-06.
2006-2011	NSERC	$100,000	*Enhanced video for shared reality environments.* Discovery grant.
2004-2006	NSERC	$136,600	*Soundscape performance works via interactive environment for immersive audiovisual scene generation.* (additional funding for artist collaborator received from Canada Council for the Arts) New Media Initative NMIPJ 307934-04.
2002-2006	NSERC	$100,000	*Shared Reality Interaction over High Bandwidth Connectivity.* Discovery grant.
2000	LUB	$100,000	*Distributed Visualization Environment.* Laboratoire universitaire Bell Equipment Grant.

Continued on next page

Date	**Source**	**Amount**	**Title/Description**
1999-2000	Petro-Canada	$20,500	*Interactive Web Tools for Critique of Presentation Skills and Evaluation of Student Learning.* Young Innovator Award.
1999-2002	FCAR	$45,000	*Augmenting an Electronic Classroom for Improved Instructor-Student Interaction.* New Researchers Award.
1999	FCAR	$15,700	*Augmenting an Electronic Classroom for Improved Instructor-Student Interaction.* Equipment Grant.
1999	AES	$25,000	*Multichannel audio over Internet.* Audio Engineering Society.
1999	OSC	$15,000	*Timespace Exhibit.* Ontario Science Center contract.
1999	MFM	$10,000	*Intelligent Classroom tools.* McGill Faculty of Management.
1998-2002	NSERC	$76,000	*Reactive Hospital Environment.* Discovery research grant.
1998	FGSR	$20,000	McGill Graduate Studies and Research Development Fund

Team Research Grants and Contracts

(Percentages refer to my portion.)

Date	Source	Amount	Title/Description
2024	Societé inclusive	$35,000 (?%)	*Perceptions des utilisateurs ayant une déficience visuelle concernant l'utilisation des électroménagers et la nécessité d'améliorer la connaissance ou l'expérience utilisateur pour des innovations futures* Societé inclusive, Programme de recherche participative intersectorielle (with F. Poncet)
2023	Mitacs	$150,000 (70%)	**Avatar Care Provider for Seniors Residences* Mitacs Accelerate (with K. Moffatt)
2022-2025	CRIAQ	$1,318,171 (35%)	†NSERC Alliance with Consortium for Aerospace Research and Innovation of Québec (CRIAQ) *ADvanced Airspace Usability (ADAIR)* (with P. Doyon-Poulin (Poltechnique), Joon Chung (Ryerson), and 6 aerospace industrial partners)
2020-2021	CIRMMT	$1,500	*Agile Seed Funding for *Conveying paralinguistic cues and context while teleconferencing* (with students David Marino, Max Henry and Pascal Fortin)
2017-2018	SSHRC	$199,680 (10%)	†*Real time impact signalling and collective goods* Partnership Development Grant (with R. Janda and 6 co-investigators)
2016-2017	NAKFI	$100,000 (20%)	*Empathy Mirror* National Academies Keck *Futures Initiative* Art and Science, Engineering and Medicine Grant (with B. Korgel and 3 co-applicants)
2015-2018	FRQNT	$182,880 (25%)	†*Étude des modèles d'interactivité humain-robot en réalité mixte afin de réduire l'apparition des troubles musculo-squelettiques en utilisant une cellule de travail hybride* Recherche en équipes (with M. Otis and 6 co-applicants)
2014	Mozilla	$20,000 (90%)	**Augmented Reality Tools for Improved Training of First Responders* Mozilla Gigabit Community Fund (with R. Dearden)
2011	CIRMMT	$10,000 (90%)	**Acoustic Sculptures* CIRMMT Strategic Innovation Fund Award (with A. Olmos and 3 others)
2010-2011	NSERC	$49,815 (90%)	**Novel Portable Treatment Device for Lazy Eye* Idea to Innovation (I2I) Booster (Phase Ib) (with R. Hess)

Continued on next page

Date	Source	Amount	Title/Description
2009-2011	MSG	$200,000 (80%)	**Location-Based Spatialized Audio Interaction for the Blind and Visually Impaired* Programme Appui au passage à la société de l'information (Support for the transition to an information society program), Ministère des Services gouvernementaux (MSG) (with M. Wozniewski and Z. Settel)
2010-2014	CHRP	$327,000 (?%)	*Computational and statistical tools for image guided neurosurgery of brain tumors* NSERC Collaborative Health Research Projects (with L. Collins and 7 others)
2009-2010	CCSIP	$48,000 (4%)	**Digitally Merged Environments* California-Canada Strategic Initiatives Program (with S. Brown, UCSD and 20 co-applicants)
2009-2011	Canarie	$927,648 (40%)	†*Open Orchestra* Network-Enabled Platforms 2 (with J. Roston and W. Woszczyk)
2010-2014	NCE	$23,000,000 (2%)	†*GRAND: Graphics, Animation and New Media* Networks of Centres of Excellence (With K. Booth and 49 others)
2009	DND	$47,500	†*Video-Based Facial Recognition–Algorithm and Demonstration* Department of National Defence Contract (with M. Levine)
2008-2009	NSERC	$120,250 (90%)	**Novel Portable Treatment Device for Lazy Eye* Idea to Innovation (I2I) (with R. Hess)
2008-2010	Canarie	$1,397,758 (7%)	*NEPTUNE: A Platform to Create and Support Ocean Science Virtual Organizations* Network-Enabled Platforms (with B. Pirenne and J. Roston)
2008-2010	Canarie	$2,000,000 (18%)	*Health Services Virtual Organization* Network-Enabled Platforms (with R. Ellaway and 8 others)
2008-2010	NSERC	$196,000 (50%)	**3-D Visualization and gestural interaction with multimodal neurological data* Strategic Projects (with 5 others)
2006-2009	FRQNT	$146,550 (50%)	**Unités agenceables: Reseau d'Environnements Immersifs pour Collaboration à Distance* Recherche en équipes (with X.-W. Sha)
2005-2006	Canarie	$825,000 (50%)	*Undersea Window–High Definition Video Online* Intelligent Infrastructure Program. (with J. Roston)
2005-2006	SAT	$1,276,000 (1%)	*TOT2: Nouveau Territoires de la Création-Diffusion en Réseau* Heritage Canada New Media Research. (M. Savoie, PI)
2004-2006	Canarie	$568,971 (33%)	*Shared Spaces – High Definition Ultra-Videoconferencing* Advanced Applications Program. (with J. Roston)
2003-2004	SAT	$792,082 (1%)	*TOT1: Nouveau Territoires de la Création-Diffusion en Réseau* Heritage Canada New Media Research. (M. Savoie, PI)

Continued on next page

Date	Source	Amount	Title/Description
2002-2005	IRIS	$573,000 (25%)	**Parallel Distributed Camera Arrays for Intelligent Environments* (with J. Clark, S. Fels, R. Vertegaal)
2002-2005	VRQ	$2,180,000 (20%)	*Real-time Communication Of High-res. Multi-sensory Content via Broadband Networks.* Valorisation-Recherche Quebec (with W. Woszczyk and others)
2001-2002	Canarie	$391,000 (30%)	*Remote Video Sign-Language Interpreting.* Advanced Networking Apps. Services & Technologies. (with J. Roston and others)
2000-2002	Canarie	$808,000 (35%)	*McGill Advanced Learnware Project.* Advanced Networking Applications Services and Technologies. (with B. Pennycook)
2000-2003	LUB	$150,000 (50%)	**Distributed Shared Visualization Environment.* Laboratoire universitaire Bell. (with B. Ozell)
2000-2001	Royal Bank	$2,000 (80%)	**Improving Teaching through an Interactive Critiquing System.* Teaching Improvement Fund Award. (with R. Harris and J. Blatter)
1999-2002	CFI	$400,000 (50%)	†*The Shared Reality Environment.* New Opportunities Award. (with J. Clark)
1999-2000	Royal Bank	$10,000 (80%)	**Interactive Web Tools for Critique of Presentation Skills and Evaluation of Student Learning.* TIF (with R. Harris)

*Indicates grants on which I am project leader. †Grant on which I am co-investigator.

Centre Research Grants

Date	Source	Amount	Title/Description
2022-2026	ILLS	$400,000	FRQNT International Laboratory on Learning Systems, funded jointly by CNRS (France) and FRQNT (Quebec), Pablo Piantanida, PI, $100,000 per annum
2021-2028	FRQSC/ FRQNT	$2,712,295	Regroupement Stratégique: *Centre Interdisciplinaire de Recherche en Musique, Médias et Technologie.* (with I. Cossette and 52 others) $276,000 per annum for 2 years and $432,059 per annum for the remainder
2019-2025	FRQNT	$2,160,000	Regroupement Stratégique pour *Systémes cyberphysiques et intelligence machine matérialisée (REPARTI).* (with C. Gosselin and 49 others) $480,000 per annum.
2015	CFI	$4,366,723	Innovation Fund: *Live Expression "in situ": Musical and Audiovisual Performance and Reception* (with M. Wanderley and 9 others)
2014-2021	FRQSC/ FRQNT	$1,800,000	Regroupement Stratégique: *Centre Interdisciplinaire de Recherche en Musique, Médias et Technologie.* (with M. Wanderley and 23 others)
2013-2019	FRQNT	$2,160,000	Regroupement Stratégique pour *l'Étude des Environnements PARTagés Intelligents répartis (REPARTI).* (with D. Laurendeau and 34 others) $359,943 per annum.
2008-2014	FRQSC/ FRQNT	$1,800,000	Regroupement Stratégique: *Centre Interdisciplinaire de Recherche en Musique, Médias et Technologie.* (with S. McAdams and 23 others)
2007-2009	NSERC	$57,630	Major Resources Support: *Centre for Interdisciplinary Research in Music Media and Technology (CIRMMT).* (with S. McAdams and 8 others)
2006-2013	FRQNT	$1,530,000	Regroupement Stratégique pour *l'Étude des Environnements PARTagés Intelligents répartis (REPARTI).* (with D. Laurendeau and 23 others) $100,000 per annum allocated to CIM.
2002-2005	FCAR	$720,000	Regroupement Stratégique: *Réseau Québecois de Recherche en Réalité Artificiellle Distribuée (QUERRAnet).* (with F. Ferrie, R. Bergevin, P. Cohen, and others)
2001	CFI	$6,500,000	Major Facilities Award: *Centre for Integrated Research in Music Media and Technology.* (with W. Woszczyk and 11 others)
2000-2002	FCAR	$113,500	Centre de Recherches. (with F. Ferrie and 17 others)

Continued on next page

Date	**Source**	**Amount**	**Title/Description**
2000	NSERC	$275,000	*Information Systems in Support of Intelligent Machine Research.* (with F. Ferrie and 17 others)

Teaching

Courses Taught

Course title and number	Description	Semester
ECSE-618 *Haptics*	Graduate course on haptic information design, co-taught with other instructors across Canada, under the informal designation of HAPTICS 501	Winter 2021–present
ECSE-421 *Embedded Systems*	Undergraduate course dealing with both the theory and practice of design for embedded systems	2018–present
ECSE-526 *Artificial Intelligence*	Graduate level course in artificial intelligence with emphasis on machine learning and autonomous agents	1998–present
*ECSE-683 *Topics in Vision and Robotics*	Graduate level laboratory course for RoboCup projects	Fall 2000 Fall 2002
*ECSE-424/542 *Human-Computer Interaction*†	Undergraduate (424) and graduate (542) course in human-computer interaction with emphasis on new interface paradigms	2000–present
ECSE-487 *Computer Architecture Laboratory*	Undergraduate laboratory course	1999–2018
ECSE-427 *Operating Systems*	Undergraduate course (core for Computer Engineering students)	1998
CSC-270 *Introduction to Modelling and Optimization*	Computer Science undergraduate course, University of Toronto	1993–1994
CEE 1714Y *Digital Systems and Computers*	Continuing Engineering Education course for the Association of Professional Engineers of Ontario	1993–1994
CSC-228 *File Structures and Data Management*	Computer Science undergraduate course, University of Toronto	1992–1995

Continued on next page

Course title and number	Description	Semester
COSC-3411 *File Structures and Data Management*	Computer Science undergraduate course, York University	1992

*Indicates new course that I created.
†In 2011, a project from this class placed third in the Usability Professionals Association International Student Design Competition. Note that graduate students have also enrolled in this course under the designation of ECSE-681, *Colloquium in Electrical Engineering* or ECSE-689, *Recent Advances in Electrical Engineering*.

Undergraduate Supervision

ECE Honors Undergraduate Projects (2 semesters)

Name	Year	Research topic
Bu, Bruce	2020	360° Imaging for Navigation Assistance for the Visually Impaired
Akgul, Ahmet	2017-2018	Haptic Wearables
Bashar, Sharhad	2016-2017	Image-based environment description
Wu, Pei Yuan (Richard)	2016	Mixed-Reality Human-Machine Interaction
Gordon, Adam	2011-12	Virtual Presence
Warraich, Shahjahan	2010-11	Natural Interactive Walking
Lin, Nan	2008	Location sensing for mobile apps
Wang, Letao	2007	Interactive Agent
Charlebois, Pierre-Olivier	2004–2005	Sound Objects in a Soundscape
Myer, Sam	2003	Automated Music Transcription
El-Refaei, Sameh	1998–1999	Shared Reality simulator

ECE Undergraduate Design Projects (2 semesters)

Name	Year	Research topic
Archambault, Roxanne	2024-2025	Holoportation: CSA VR Astronaut Training
Dejanov, Aleksej	2024-2025	Holoportation: CSA VR Astronaut Training
Nguyen, Anh Tu	2024-2025	Holoportation: CSA VR Astronaut Training
Turianskyj, Alex	2024-2025	Holoportation: CSA VR Astronaut Training
Lu, Yu-An	2024-2025	AI Digital Nurse Avatar (ADiNA)
Chowdhury, Nazia	2024-2025	AI Digital Nurse Avatar (ADiNA)
Hall, Allison	2024-2025	AI Digital Nurse Avatar (ADiNA)
Gouchee, Annie	2024-2025	AI Digital Nurse Avatar (ADiNA)
Ajji, Maya	2024	AI Digital Nurse Avatar (ADiNA)
Rahman, Nafis	2024	AI Digital Nurse Avatar (ADiNA)
Wang, Jingyi	2024	AI Digital Nurse Avatar (ADiNA)
Zhang, Rong Wei	2024	AI Digital Nurse Avatar (ADiNA)
Srivastava, Atreyi	2024	AI Digital Nurse Avatar (ADiNA)
Ktaily, Nour	2024	AI Digital Nurse Avatar (ADiNA)
Bansal, Pratham	2024	AI Digital Nurse Avatar (ADiNA)
Cattani, Alex	2024	AI Digital Nurse Avatar (ADiNA)
Wang, Bohan	2024	Cybersight
Feng, Shuzhao	2024	Cybersight
Tian, Steven	2024	Cybersight
Wang, Yiqiao	2024	Cybersight
Bebee, Lukas	2023-2024	Force-feedback experiences for IMAGE

Continued on next page

Name	**Year**	**Research topic**
Alexander Tsahageas	2023-2024	Force-feedback experiences for IMAGE
Emma Kawczynski	2023-2024	Force-feedback experiences for IMAGE
Massimo Rosati	2023-2024	Force-feedback experiences for IMAGE
Gurhan, Eren	2023-2024	Vision-guided Navigation Assistance
Yan, Ke	2023-2024	Vision-guided Navigation Assistance
Calitoiu, Mihail	2023-2024	Vision-guided Navigation Assistance
Park, John	2023-2024	Vision-guided Navigation Assistance
Hu, David	2023	Vision-guided Navigation Assistance
Gasmi Ilyes	2023	Vision-guided Navigation Assistance
Habelrih Edward	2023	Vision-guided Navigation Assistance
Arabian Ari	2023	Vision-guided Navigation Assistance
Fathi, Saab	2023	Avatar therapy for psychosis
Ham, Sia	2023	Avatar therapy for psychosis
Choi, Myunghoon	2023	Avatar therapy for psychosis
Kruchinski Almeida, Martin	2023	Avatar therapy for psychosis
Kabir, Anika	2023	Chatting with historical figures
Huynh, Vy-Kha	2023	Chatting with historical figures
Solaberrieta, Emilia	2023	Chatting with historical figures
Cui, Bowen	2022-2023	Immersive multimodal CAVE experience
El Haddad, Georges	2022-2023	Immersive multimodal CAVE experience
Fazal, Gohar Saqib	2022-2023	Immersive multimodal CAVE experience
Mahajan, Madhav	2022-2023	Immersive multimodal CAVE experience
Pan, Edwin	2022-2023	Touching faces in VR
Gosman, Mircea	2022-2023	Touching faces in VR
Justin, Legrand	2022	Vision-guided Navigation Assistance
Sen, Wang	2022	Vision-guided Navigation Assistance
Chamberland, Noah	2022	Vision-guided Navigation Assistance
Natchev Keanu	2022	Novel digital representation of sign language
Arabian Matthias	2022	Novel digital representation of sign language
Destiné, Maxens	2022	Novel digital representation of sign language
Jarvis, Thomas	2022	Natural Dialog Generation for Mental Health
Kong, Norman	2022	Natural Dialog Generation for Mental Health
MacNaughton, Ben	2021-2022	plots data parsing for IMAGE project
Williams, Aidan	2021-2022	plots data parsing for IMAGE project
Nunez, Matteo	2021-2022	Foot-fluid interaction simulation in mobile VR
Comeau, Francis	2021-2022	Foot-fluid interaction simulation in mobile VR
Gure, Kaan	2021-2022	Foot-fluid interaction simulation in mobile VR
Calin, Haluk	2021-2022	ML-based Navigation Assistance
Cano, Victor	2021-2022	ML-based Navigation Assistance
Das Sharma, Kaustav	2021-2022	ML-based Navigation Assistance
Dufault, Louca	2021-2022	ML-based Navigation Assistance
Simard, Felix	2021	detecting benevolent sexism in text
Watson, Tyler	2021	detecting benevolent sexism in text

Continued on next page

Name	**Year**	**Research topic**
Porporino, Anthony	2021	detecting benevolent sexism in tex
Bourbeau, Charles	2021	detecting benevolent sexism in text
Ko, Neroli	2020-2021	haptic dance shoes
Zwack, Noah	2020-2021	haptic dance shoes
Zhang, Weijing	2020-2021	haptic dance shoes
Szwimer, Benjamin	2020-2021	visually impaired access to web graphics
Zoltak, Matthew	2020-2021	visually impaired access to web graphics
Itovitch, Ethan	2020-2021	visually impaired access to web graphics
Weiss, Ben	2020-2021	mixed-reality for schizophrenia treatment
Bieber, Nicolas	2020-2021	mixed-reality for schizophrenia treatment
Khan, Marwan	2020-2021	360° imaging for navigation assistance
Johansen, Anthony	2020-2021	360° imaging for navigation assistance
Gurkan, Mert	2020-2021	360° imaging for navigation assistance
Warsi, Osman	2020-2021	360° imaging for navigation assistance
Lague, Ethan	2019-2020	AR firefighter situational awareness tools
Masciotra, Alex	2019-2020	AR firefighter situational awareness tools
Philippon, Thomas	2019-2020	AR firefighter situational awareness tools
Bouchard, Tristan	2019-2020	AR firefighter situational awareness tools
Smith, Babette	2019-2020	AR and 360: camera-mediated future
Smith, Lilith	2019-2020	AR and 360: camera-mediated future
Chen, Jennie	2019-2020	Foot-fluid interaction simulation in mobile VR
Servera, Ryan	2019-2020	Foot-fluid interaction simulation in mobile VR
Wong, Tyrone	2019-2020	Foot-fluid interaction simulation in mobile VR
Bluethner, Lucas	2019-2020	Foot-fluid interaction simulation in mobile VR
Volodina, Yuliya	2019	360° camera scene understanding
Ritch, David	2019	360° camera scene understanding
Lam, Guillaume	2019	360° camera scene understanding
Nasseem, Veronica	2019	360° camera scene understanding
Amjad, Adeeb Ibne	2019	360° camera supported intersection-crossing
Amarouche, Hakim	2019	360° camera supported intersection-crossing
Tang, James	2019	360° camera supported intersection-crossing
Commodari, Stefano	2019	360° camera supported intersection-crossing
Regimbal, Juliette	2019	Haptic Wearables
Radi, Nusaiba	2019	Haptic Wearables
Berman, Isaac	2018	Vision-based crossing assistance
Mashaal, Stuart	2018	Vision-based crossing assistance
Liu, Shi Yu	2018	Vision-based crossing assistance
Legrand, Augustin	2018	Force Feedback for VR and AR
Fournier, Clément	2018	Force Feedback for VR and AR
Nith, Romain	2018	Force Feedback for VR and AR
Malik, Numan	2017-2018	Variable-Friction Surface Mechanism
Eshaq, Yousef	2017-2018	Variable-Friction Surface Mechanism
Alalawi, Beshr	2017-2018	Variable-Friction Surface Mechanism

Continued on next page

Name	**Year**	**Research topic**
Ahmed, Ridwan	2017-2018	Variable-Friction Surface Mechanism
Nichyporuk, Brennan	2017-2018	AI/vision-based Q&A Dialogue
Benseler, Nick	2017-2018	AI/vision-based Q&A Dialogue
Karatzas, Thomas	2017-2018	Wine recommendation engine
Zhilin, Oleg	2017-2018	Wine recommendation engine
Simard-Morissette, Olivier	2017-2018	Wine recommendation engine
Mirfallah Liarestani, N.	2017	Autour
Kim, Yong Beom	2017	Autour
Gibeault-Girard, Gabriel	2017	AR firefighter display
Velastegui, Nicolas	2017	AR firefighter display
V Cama, Carmen Aimee	2017	AR firefighter display
Dermont, Daniel	2016-2017	Haptic shoes
Makriogiorgos, A.	2016-2017	Haptic shoes
Rohlicek, Greg	2015-2016	Mobile telepresence
Carter, Stephen	2015-2016	Mobile telepresence
Zhang, Zhaowei	2015-2016	Haptic shoes
Huynh, Alex	2015-2016	Haptic shoes
Guzman, Juan	2015-2016	Video analytics
Ali, Hassan	2015-2016	Video analytics
Macario, Daniel	2015-2016	Automated event detection
Arané, Yarden	2015-2016	Automated event detection
Leighton, Brett	2015-2016	Automated event detection
Aird, Nicholas	2015-2016	AR firefighter display
Chen, Yuechuan	2015-2016	AR firefighter display
Lei, Simon	2015-2016	AR firefighter display
Mendonca, Justin	2015-2016	Firefighter IPS
Asfour, Justin	2015-2016	Firefighter IPS
Ward, Thomas	2015-2016	Firefighter IPS
Laramée, Alexandre	2015-2016	Firefighter IPS
Sahib, Shivan	2015-2016	Biosignal wearables
Nath, Saptaparna	2015-2016	Biosignal wearables
Bramson, Shawn	2013–2014	Mobile Telepresence
Larose, Andrew	2013–2014	Mobile Telepresence
Dirik, Alize	2013–2014	Mobile Telepresence
Mansour, Rita	2013–2014	Walking Straight
Elkerdi, Ghalia	2013–2014	Walking Straight
Redel, Josh	2012	Augmented Meeting Collaboration
Savchenko, Eugene	2010	3D interaction

ECE Undergraduate Design Projects (1 semester)

Name	Year
Himmelman, Tristan	2009
Ephraim, Theo	2009
Peck, Benjamin†	2008
Mankarios, Daniel	2007
Konstantinidis, Alex	2007
Pufahl, David	2005
Zhu, Ming-Zhang	2005
Chan, Keng Chi	2005
Phan, Andrew	2004
Saifee, Ali-Akber	2004
Shield, Robert	2004
Aubé, Francois	2004
Rudzicz, Frank	2003
Sarikaya, Deniz	2002
Vallianatos, K.	2002
Hassaine, Sofiane	2002
Wyse, Marisa	2001
Bancroft, David	2001

Name	Year
Glass, Emily	2001
Asselin, Ramy	2001
Sud, Daniel	2001
Gapakov, Timofei	2001
Rosenblatt, Avi	2001
Pekofsky, Gregory	2001
Kitisa, Anousack	2000
Vial, Thibaut	2000
Bernier, Martin	2000
Agha, Khurram Z.	2000
Bhattacharya S.	2000
Lavery, William	2000
Yeung, Jason	2000
Liao, Yuan Mei	1999
Yee, Amy	1999
Pereira, David	1999
Ciambella, Gary	1999
Kassouf, Nadim	1999
Lee, Garvin	1999

Name	Year
Li, (Shao-Gi) Chris	1999
El-Sharif, Osama	1999
Nasereddin, Hazem	1999
Virdi, Gurpratap	1999
Shah, Ali	1999
Djihanian, Sylvie	1999
Moussaoui, Khaled	1999
Dib Youssef	1999
Tam, H.	1999
Gagnon, Gabriel	1999
Tjhin, P.	1999
Luong, Mai	1999
Lau, Sau	1999
Tsai, Wanti	1999
Lerner, Sorin*	1999
Hochstein, Lorin*	1999
Pollack, Jonathan	1998
Nguyen, Bau	1998

*Co-supervised with James Clark
†Co-supervised with Paul Kry

Computer Science Undergraduate Projects (1 semesters)

Lakhwani, Sanjeev	Sep–Dec 2024	Musical Telepresence
Kandlikar-Bloch, Mira	Jun–Aug 2024	AI Digital Nurse Avatar
Gostovic, Lilith	Jan– Apr 2024	Visualizing Chronic Pain with Artificial Intelligence
Newman, James	Jan– Apr 2024	Visualizing Chronic Pain with Artificial Intelligence
Song, Juyeon Olivia	Jan– Apr 2024	Visualizing Chronic Pain with Artificial Intelligence
Chowdhury, Shadman	Jan– Apr 2024	Visualizing Chronic Pain with Artificial Intelligence
Liang, Tina	Jan– Apr 2024	Integrating Attention Detection with Human-Avatar Interaction
Nejad, Namdar	2022	Improving Accessible Representations of Web Graphics
Li, Dailun	2022	Training and Testing an Open-Source French TTS Model

Bioengineering Undergraduate Research Projects (1 semesters)

Wang, Angela	Sep–Dec 2024	Characterizing comfort of wearable band tightness

Mechanical Engineering Undergraduate Design Projects (2 semesters)

Sadaqa, Abdel-Rahman	2020-2021	Haptic illusions
Waite, Emilie	2020-2021	Haptic illusions
Shi, Rock	2020-2021	Haptic illusions
Fitz-Gerald, Thomas	2020-2021	Haptic illusions
Pollet, Nathan	2020-2021	Multimodal haptic armrest
Uzan, Emanuel	2020-2021	Multimodal haptic armrest
Ruivo Patricia	2020-2021	Multimodal haptic armrest
Abravanel Tal	2020-2021	Multimodal haptic armrest
Fowo, Clovis	2017-2018	Haptic interface for the feet
Robert, Gabrielle	2015-2016	Variable friction shoe
King, Michael	2013-2014	Variable Friction Foot-Ground Contact

Undergraduate Internships

Name	Year	Research project
Raza, Abbas	2024	(NYU Abu Dhabi research grant intern) Comparing speech and text interactions with automation in the cockpit
Castrillon Acosta, Isabel	2024	(Mitacs Globalink) Transforming speech into vibrations
Adnaan, Mohammad	2024	(Mitacs Globalink) Autonomous Navigation Assistance for the Visually Impaired
Mandampully, Samyuktha	2024	(Mitacs Globalink) Internet Multimodal Access to Graphical Exploration (IMAGE)
Lu, Calla	Jan–Apr 2024	Visualizing Chronic Pain with Artificial Intelligence
Sarellano, Andrés	Sep– Dec 2023	(Tec de Monterrey Undergraduate Research Trainee) Social Telepresence
Moreno Piedra, Balthazar	Sep– Dec 2023	(Tec de Monterrey Undergraduate Research Trainee) Social Telepresence
Tomiuk, Emma	2023	(ARIA Intern) Musical Telepresence
Gunatilaka, Movinya	2023	(Mitacs Globalink) Musical Telepresence
Lavoie, Gabrille	2023	(research trainee) Internet Multimodal Access to Graphical Exploration (IMAGE)
Bessonov, Vladimir	2023	(research trainee)
Phan Antoine	2023	(SURE student) Internet Multimodal Access to Graphical Exploration (IMAGE)
MacInnes, Gabrielle	2023	(SURE student) Internet Multimodal Access to Graphical Exploration (IMAGE)
Abderrahim, Ons	2023	(Mitacs Globalink) Autour
Glavas, Theodore	2023	(NSERC USRA) ChatGPT-based health assistants
Li, Hanzi	2022	(CS Intern) Internet Multimodal Access to Graphical Exploration (IMAGE)
Gutiérrez, Diego Macias	2023	(Mitacs Globalink) Haptic dance shoes
Cortes, Dafne Peña	2023	(Tec de Monterrey Undergraduate Research Trainee) Internet Multimodal Access to Graphical Exploration (IMAGE)
Shen, Xing	2022	(ECE Intern) Vision-Guided Navigation Assistance
Dutta, Riana	2022	(NSERC USRA) Internet Multimodal Access to Graphical Exploration (IMAGE)
Pan, Edwin	2022	(SURE Student) Touching Face in VR
Chen, Hongye	2022	(ECE Intern) Internet Multimodal Access to Graphical Exploration (IMAGE)

Continued on next page

Name	**Year**	**Research project**
Behal, Rahul	2021-2022	ML-based Navigation Assistance for the Visually Impaired
Rao Appala, Siddharth	2021	(Mitacs Globalink) Making internet graphics accessible through rich audio and touch
Contreras, Luis F. H.	2021	(Mitacs Globalink) Haptic device for sensory re-education application
Bhayana, Rachit	2021	(NSERC USRA) Conveying Paralinguistic and Non-Verbal Cues in Teleconferencing
Reszetnik, Grace	2021	(NSERC USRA) Avatar therapy for psychosis
Jiang, Cecilia	2021	(NSERC USRA) Avatar therapy for psychosis
Radi, Rakshitha	2021	(ECE Intern) Assistive Technology Project
Marshall, Kenji	2020-21	(ECE Intern) Avatar therapy for psychosis
Pollet, Nathan	2020	(SURE Student) 360° camera imaging
Bu, Bruce	2019	(SURE Student) Haptic Wearables
Chen, Jennie	2019	(SURE Student) Haptic Wearables
Zhang, Yukai	2019	(SURE Student) Haptic Wearables
Ratnakirti, Navneet	2019	(SURE Student) Sweatsponse
Al Taha, Feras	2018-2019	(NSERC USRA) Haptic Wearables
Nunez, Matteo	2018	(SURE Student) Haptic Wearables
Huang, Yixiang	2018	(SURE Student) Non-Intrusive Mobile Experience Sampling
Li, Zihang	2018	(Mitacs Globalink) Enhanced Remote Viewing Capabilities from a Camera Array
Kaoubi, Hadir	2018	(Mitacs Globalink) Autour: "What's around me?"
Ma, Jiantong	2018	Haptic Zoom
Tran, Jessica	2017	Social Media Monitoring
Xing, Emily	2017	Attention Switching Protocols in Family Conversations
Hao, Ju	2017	(Mitacs Globalink research intern) Haptic shoes
Lisus, Daniil	2017	(NSERC USRA) Natural Interactive Walking
Tran, Andrew	2016-2017	Multimodal CAVE integration
Sun, Nan Jin (Kelly)	2016-2017	Multimodal CAVE integration
Liu, Yufei (Kevin)	2016	Flexible graphical display of foot-ground interactions
Kashyap, Sumeha	2016	(Summer Intern from Indian Institute of Technology Guwahati) Walking Straight Project

Continued on next page

Name	**Year**	**Research project**
Hamed-Baghi, Bobak	2016	(SURE Student) Game Interaction for Haptic Shoes
Dubé, Felix	2016	(SURE Student) Haptic Shoes
Yang, Yanzhe	2015	(Mitacs Globalink) Enhanced Remote Viewing Capabilities from a Camera Array
Morency-Trudel, Juan	2015	(NSERC USRA) Spatialized audio for environmental awareness for the visually impaired
Liu, Bei Chen	2015	(SURE Student) Haptic in-sole design and implementation
Liu, Shuxuan (Dennis)	2015	Multimodal CAVE integration
Chaudhary, Yetesh	2014	Communication in Emergency and Crisis Response
Pavlasek, Jana	2014	(NSERC USRA) Natural Interactive Walking
Jiang, Mike	2014	(IAESTE student trainee) Graphics Rendering for Multimodal CAVE
Yin, Guofan	2014	(Mitacs Globalink) Enhanced Remote Viewing Capabilities from a Camera Array
Murgai, Prateek	2014	Acoustic Signal Processing
Sharma, Alok	2013-14	(BITS India Student) rt Emergency Response
Gupta, Sakshi	2013	(SURE Student from Indian Institute of Information Technology, Jabalpur) In-Situ Audio Services
Brais, Robert	2013	(NSERC USRA) Natural Interactive Walking
Gourdy, Oriane	2013	(Grenoble INP Student) 3DUI Interaction
Jain, Nehil	2011-12	(BITS India Student) In-Situ Audio Services
Sutcliffe, Andrew	2011	Haptically Augmented Steering Wheel
Greencorn, Dan	2011	Food Analysis Simulation
Redel, Josh	2011	Open Orchestra
Varenne, Dylan	2011	(Polytech Nice-Sophia), In-Situ Audio Services
Tomiyoshi, Marcio	2011	(ELAP Scholarship Student) Open Orchestra
Beniak, Stephane	2010	(NSERC USRA) Natural Interactive Walking
Salenikovich, Stepan	2010	Natural Interactive Walking
Chaw, Gary	2010	Natural Interactive Walking
Redel, Josh	2010	Health Services Virtual Organization
Smith, Severin	2009-11	Natural Interactive Walking

Continued on next page

Name	**Year**	**Research project**
Rajalingham, Rishi	2009	(NSERC USRA) Natural Interactive Walking
Rener, Farid	2009	(SURE Student) Natural Interactive Walking
Bae, Sung	2009	Optical Tracking for Audio Graffiti
Jathal, Kunal	2007	Haptic and auditory perception in human walking
Lin, Nan*	2006	(NSERC USRA) Interactive navigational control of robotic wheelchair
Reiter, Philippe	2005	(VP USRA Student) Distributed Video Rendering
Ariane Chan-You	2003	Region-of-Interest Control in Videoconferencing
Ariane Chan-You	2002	Videoconferencing Data Reduction
Gupta, Greeshma	2000	(NSERC Student) Automated slide converter
Cote, Christian	2000	(NSERC Student) Video transformations
Ayatizadeh, Negah	2000	Network communication daemons
Swartz, Tanya	2000	Speech-based TV-tuner interface
Cohen, Ouri	2000	Classroom 2000 access control
Yeong, Jason Aw	1999	(Work Study) Previously Asked Questions system
Agha, Khurram Zubair	1999	(Work Study) URL access tracking
Lim, Weoi Peng	1999	(Work Study) Graffiti board
Agha, Haroon Ali	1999	(Work Study) Classroom 2000 minipres. system
Klinger, Zamir	2000	(NSERC Student) Automated Door Attendant
Hooshangi, Sara	2000	(NSERC Student) Intelligent Classroom
Liao, Yuan Mei	1999	Electronic Classroom control interfaces
Luo, Jiexin	1999	PowerPoint C2000 interface and image libraries
Zhao, Changpeng	1998-99	Seamless PowerPoint upload for Classroom 2000
Lakdawalla, Azeem	1998-99	Real-time conjugate-gradient based head-tracking

*Co-supervised with Joelle Pineau

Service

University Service

Department Committees

2024-2025	Department Search Committee
2024-2025	Professional Advancement and Recognitions Committee
2020-2022	ECE Unit Lab Access Committee
2017-2018	Undergraduate Recruitment Committee, Chair
2017-2020	Search Committee (Software Engineering, Artificial Intelligence)
2017-2018	Tenure Committee
2015-2025	Safety Committee (Chair in 2015-2017)
2014-2016	Grant Application Support Committee
2012-2024	Graduate Committee
2008-2012	Undergraduate Recruitment Committee
2005-2011	Scholarships/Graduate Student Financing Committee
2002	Ad hoc Committee on Computing Infrastructure for ECE/SOCS
2000-2008	College Liaison Comittee
2001-2004	Information Technologies & Undergraduate Lab
2000-2002	Curriculum Committee
2000	Software Engineering subcommittee
2000-2007	Undergraduate Student Advisor

Other University Service

2024	Chair's representative, Biomedical Engineering PhD Committee meeting
2024	Faculty Mentor, McGill Biomechanics Club
2022-2024	Research Axis Co-lead and Member of CIRMMT Executive Committee
2014-2016	Elected Member of Council, McGill Association of University Teachers
2009-2013	Research Axis Co-lead and Member of CIRMMT Executive Committee
2007-2013	Co-chair, Multimodal Immersive Systems research axis, CIRMMT
2006-2008	Member, CIRMMT Board of Directors
2006	Advisory Committee for Dean of Music
2004	Tomlinson University Science Teaching Project adjudication
2003-2004	Royal Bank Teaching and Learning Innovation Fund adjudication
2003	Groupe de travail sur les normes et standards de la formation en ligne. Conférence des recteurs et des principaux des universités du Québec (CREPUQ), McGill University Representative
2002-2003	SC-IST Workgroup on Research Computing
2000-2003	SC-IST Workgroup on Classroom Design
1999-2004	Engineering Committee on Teaching and Learning
1999	SC-IST McGill Machine Project
1998	Workgroup on Educational Technology

Fundraising Activities

2002	RoboCup demonstration at McCord museum for Dean's Circle
2002	Corporate fundraising for McGill RoboCup team
2001-2002	Intelligent Classroom promotion with the Engineering Class of '50; helped raise $274,000
2001	Trottier Building research promotion

Other Activities

2007-2010	Promotion of Academic Integrity
2001-2002	Design of new Intelligent Classroom systems for ENGMC 304
1999-2002	Maintenance of the Intelligent Classrooms, training other faculty in use of the technology
1999	Curriculum development of three new courses in software engineering

Professional Activities

Service to the Community

2023-2024	Local Events Organizer, 2024 IEEE Cognitive and Computational Aspects of Situation Management (CogSIMA)
2023	Sponsorship and Exhibits Co-Chair, 2024 IEEE Haptics Symposium
2019	Government of Canada, Network of Canadian Experts on Virtual Reality
2018	Consulted by Ordre des ingénieurs du Québec regarding the OIQ's position on AI
2018	Invited Member, Fonds de recherche, Chantier sur l'intersectorialité et la créativité
2018	Co-chair, ACM SIGCHI Demonstrations
2017	External member of academic selection committee, École de technologie supérieure
2016	Organizing Committee, IEEE International Workshop on Multimedia Signal Processing, Special Session on Multimodal Interaction with Digital Information in Smart Cities
2016,2019	Selection Committee, Bill Buxton HCI Thesis Award
2016	Digital Media Program Review, York University
2016	Critique of TCPS CORE Tutorial on Research Ethics (Secretariat agreed to remove problematic question associated with the Zimbardo study)
2010-2015	Theme Leader, Enabling Technologies, Graphics Animation and New Media (GRAND) Networks of Centres of Excellence
2010-ongoing	Voting Member, IEEE Communication Society Multimedia Communications Technical Committee (IEEE MMTC)
2009	Organizer and Chair, AES Workshop on Network Technologies for Audio over IP
2008	Tenure Portfolio evaluation, York University
2005-2006	Organizer, AES Tutorial and Workshop on Human Factors in Audio
2004	Founder, AES Technical Committee for Human Factors in Audio Systems
2003	Organizer, Workshop on LAN Delivery of Audio for AES
2002-2003	Comité Scientifique de Robofolies, Centre Science de Montreal
2001	Local Events Organizer, Autonomous Agents Conference, Montreal
2001-2009	Chair, AES Technical Committee for Network Audio Systems
2000-2004	Scientific Organizer, RoboCup Junior, Montreal
2000-2001	Organizing Committee, Robofesta International Robot Games Festival, Japan
1999-2000	Member and Webmaster, Canadian Virtualized Reality Working Group
1998	Co-organizer, AAAI Symposium on Intelligent Environments

Editorial Service

2025-ongoing	Associate Editor-in-Chief, IEEE Transactions on Haptics
2021-2024	Associate Editor, IEEE Transactions on Haptics
2021	Senior Program Committee, International Conference on Multimodal Interaction
2021	Guest Editor, IEEE Transactions on Haptics (WHC track)
2020-ongoing	Associate Editor, Frontiers in Virtual Reality
2019, 2025	Associate Editor, World Haptics Conference
2019	Guest Editor, Multimodal Technologies and Interaction, Special Issue on Multimodal Medical Alarms
2018-2022	Associate Editor, Program Committee member, Haptics Symposium
2013	Guest Editor, Journal of the Audio Engineering Society, Special Issue on Audio Networking
2008-2022	Associate Editor, Journal of the Audio Engineering Society

Journal Referee

2025	Springer Nature Discover Computing
2022	IEEE Multimedia
2021	ACM Transactions on Human-Computer Interaction
2020-21	ACM Transactions on Applied Perception
2020	ACM Interactive, Mobile, Wearable and Ubiquitous Technologies
2019	Frontiers in Neurobotics
2018	Peer J–Journal of Life & Environmental Sciences
2017	Sensor Review
2015	Ambient Intelligence and Smart Environments
2010-20	IEEE Transactions on Haptics
2012	International Journal on Acoustics
2011	BMC Medical Informatics and Decision Making
2011	IEEE Software
2010	IEEE Transactions on Affective Computing
2010	IEEE Transactions on Robotics
2010	IEEE Signal Processing Magazine
2009	IEEE Transactions on Robotics
2008	EURASIP Advances in Signal Processing
2008	EURASIP Image and Video Processing
2008-ongoing	Audio Engineering Society
2007	IEEE Transactions on Systems, Man, and Cybernetics
2006	International Journal of Human-Computer Interaction
2006	Springer Virtual Reality
2005	Elsevier: Computers and Education
2005	Elsevier: Image and Vision Computing
2004, 2019	IEEE Pervasive Computing
2000, 2003	Wiley Journal of Robotic Systems
1999	ACM Transactions on Computer-Human Interaction
1999	IEEE Transactions on Robotics and Automation
1998	IEEE Personal Communications

Conference Review

2024	IEEE Conference on Cognitive and Computational Aspects of Situation Management (CogSIMA)
2023	ACM/IEEE Human-Robot Interaction
2020	IEEE Virtual Reality
2018, 2020, 2024	ACM SIGCHI User Interface Systems and Techniques
2018	Workshop on Assistive Computer Vision and Robotics
2018	Eurohaptics
2017	International Conference on Auditory Display
2017	Mobile HCI
2017-19	IEEE World Haptics
2016	IEEE International Workshop on Multimedia Signal Processing
2015	ACM Multimedia
2015	INTERACT
2014	ACM SIGGRAPH
2012, 2013	Workshop on Context Based Affect Recognition
2012, 2013	International Society for Presence Research
2012	IEEE Canadian Conference on Electrical and Computer Engineering
2011	AES Conference on Audio Networking
2011	Intelligent Robots and Systems
2011	VRIC Wkshop on Haptics for Telepresence, Teleoperation & Collab. Environments
2009	IEEE Haptics Symposium
2009	International Computer Music Conference
2009	Stereoscopic Displays and Applications
2008-19	ACM SIGCHI Human Factors in Computing
2008	Immersive Medical Telepresence
2006	International Conference on Digital Audio Effects
2006, 2007	IEEE Workshop on Projector-Camera Systems (part of CVPR)
2005-2009	Canadian Conference on Computer and Robot Vision
2004, 2009-14, 2016	Graphics Interface
2003, 2006	Audio Engineering Society
2003	New Interfaces for Musical Expression
2002	RoboCup International Symposium
2002, 2015	IEEE International Conference on Robotics and Automation
2001	ACM UbiComp
2001	IEEE International Conference on Computer Vision

Grant Review

2017	NSERC Strategic Project Grants
2017	Member of Expert Committee, CFI Innovation Fund
2016	L'Agence Nationale de la Recherche (France)
2011	NSERC Collaborative Research and Training Experience Program (CREATE)
2009, 2011	Mathematics of Information Technology and Complex Systems (MITACS)
2009	NSERC Strategic Networks (Site Visit Chair)
2008, 2015, 2017	Peer review, NSERC Collaborative Research and Development Grants
2007-2008	NSERC Industrial Research Chair (Site Visit)
2007-2020	Research Grants Council, Hong Kong
2005	NSERC Steacie Memorial Fellowship
2002, 2005-2008	Panel member, NSERC/Canada Council, New Media Initiative
2001-2017	Peer review, NSERC Discovery Grants
2001, 2008	Peer review, CFI (Canada Foundation for Innovation)

Participation in Academic Fora

2019	San Diego Opera – Opera Hack, July 27-28
2019	Dagstuhl Seminar on Ubiquitous Computing Education, June 2-7
2010	Participant, NSF/CCC Workshop on Ultra-Large Scale Interaction

Service to Society

Organizations for People with Disabilities

2024	foster parent for Mira Foundation service dog in training

Consumer Rights' Advocacy

2013	brought successful appeal (2013 QCCA 1670) before Quebec Court of Appeal regarding anti-SLAPP legislation
2013	initiated petition to improve rights of Canadian airline passengers
2010	advocating for reliable public transportation in Montreal
1997-2019	created and maintained passenger rights website