EXHIBIT: 1010

IN THE UNITED STATES DISTRICT COURT
FOR THE DISTRICT OF DELAWARE

EARIN AB, Plaintiff, v. **SKULLCANDY, INC.,** Defendant.	Civil Action No.: 24-cv-275-RGA **JURY TRIAL DEMANDED**

FIRST AMENDED COMPLAINT

Plaintiff Earin AB ("Earin") files this First Amended Complaint against Defendant Skullcandy, Inc. ("Skullcandy").

NATURE OF THE CASE

1. This is an action for patent infringement arising under the patent laws of the United States, 35 U.S.C. §§ 101, *et seq.*, including U.S.C. § 271 for the infringement of United States Patent No. 9,402,120 ("the '120 Patent").

2. Defendant Skullcandy has been making, using, selling, offering for sale, and/or importing a line of wireless earbud products which enter an operational mode when disconnected from a charging case, automatically form a wireless connection between the earbuds, have true stereo capabilities with monoaural fallback modes, and automatically pair with audio streaming host devices, including without limitation the Skullcandy Mod True Wireless earbud products and Rail ANC True Wireless Earbuds (collectively "the Accused Products"), which infringe the '120 Patent in violation of 35 U.S.C. § 271.

3. Earin seeks appropriate damages and prejudgment and post-judgment interest for Skullcandy's infringement of the '120 Patent.

EXHIBIT: 1010

PARTIES

4. Backed by the Kickstarter community in 2014, Earin launched the original true wireless stereo ("TWS") M-1 earbuds on October 6, 2015. Earin has for the past nine years been known as a leading innovator of Bluetooth-enabled wireless earphone technologies.

5. Earin is a Swedish corporation with a principal place of business at Dockgatan 27, 211 12 Malmö, Sweden.

6. On information and belief, Defendant Skullcandy is a Delaware corporation with a principal place of business at 6301 N. Landmark Dr., Park City, Utah.

JURISDICTION & VENUE

7. This is an action for patent infringement arising under the Patent Laws of the United States, Title 35 of the United States Code.

8. This Court has subject matter jurisdiction over this action pursuant to 28 U.S.C. §§1331 and 1338(a).

9. This Court has personal jurisdiction over Defendant Skullcandy because Skullcandy is a Delaware corporation and therefore has continuous presence in, and systematic contact with, this District.

10. On information and belief, Skullcandy has committed and continues to commit acts of infringement in this Judicial District, and the claims addressed in this Complaint arise out of and relate to such acts, including at least by making, using, offering for sale, and selling the Accused Products within this District.

11. Venue is proper in this Court pursuant to 28 U.S.C. §§ 1391 and 1400(b) because Skullcandy is incorporated in this Judicial District and Skullcandy's infringing activities have occurred and are occurring in this Judicial District.

EARIN'S U.S. PATENT NO. 9,402,120

12. On July 26, 2016, the United States Patent and Trademark Office duly and legally issued United States Patent No. 9,402,120, entitled "Wireless Earbuds." A true and correct copy of the '120 Patent is attached as Exhibit A. The priority date of the '120 Patent is no later than September 5, 2014.

13. The '120 Patent is, *inter alia*, directed to a wireless earbud system where the earbud housing includes a loudspeaker element, a rechargeable battery, and a printed circuit board, such that when an earbud is disconnected from a battery charger, it exits from an idle mode, enters into an operational mode, and attempts to pair with another earbud to operate in true wireless stereo (TWS) mode. According to the wireless earbud system of the '120 Patent, if the connection to the other earbud fails, the earbud will operate in a mono audio receiver mode, and if the earbud's connection to a streaming host device fails, the earbud will initiate a pairing procedure to reconnect with a host device.

14. Earin AB is the owner, by assignment, of all right, title, and interest in and to the '120 Patent, including the right to bring suit for past, present, and future patent infringement, and to collect past, present, and future damages.

15. The '120 Patent is valid and enforceable under the United States Patent Laws.

COUNT I:
INFRINGEMENT OF THE '120 PATENT

16. Earin incorporates by reference the allegations in the preceding paragraphs.

17. Skullcandy has made, used, offered for sale, and/or sold the Accused Products that incorporate one or more of the inventions claimed in the '120 Patent within the United States.

18. Skullcandy has infringed and continues to infringe, either literally or under the doctrine of equivalents, one or more claims, including at least claim 20, of the '120 patent in

violation of 35 U.S.C. § 271, *et seq.*, by making, using, selling, and offering for sale, in this District and in the United States the Accused Products including, but not limited to, the Rail ANC True Wireless earbud products.

19. Claim 20 of the ’120 Patent provides:

> [Preamble] A wireless earbud having an idle mode and an operational mode, the wireless earbud comprising:
>
> [A] an earbud housing;
>
> [B] a loudspeaker element;
>
> [C] a rechargeable battery; and
>
> [D] at least one main printed circuit board having disposed thereon circuitry for wireless radio communication, audio codec and earbud operation control;
>
> [E] wherein the circuitry is configured for automatic power preservation by: detecting connection of said battery to a charger and in response entering the idle mode, wherein existing connections to a second wireless earbud and to a wireless audio streaming host device will be disconnected; and
>
> [F] detecting disconnection of said battery from said charger and in response entering the operational mode by: attempting a true wireless stereo, TWS, reconnection with the second wireless earbud;
>
> [G] if the attempt is successful, operating the wireless earbud as a TWS audio receiver and otherwise operating the wireless earbud as a mono wireless audio receiver;
>
> [H] if operated as a TWS audio receiver, determining whether the wireless earbud is a master device or a slave device with respect to the second wireless earbud;
>
> [I] if the wireless earbud is determined to be a master device, attempting to reconnect with the wireless audio streaming host device and other known wireless audio streaming host devices if applicable; and
>
> [J] if reconnection with the wireless audio streaming host device fails, initiate a pairing procedure with the wireless audio streaming

host device and other known wireless audio streaming host devices if applicable.

20. Based on publicly available information, Skullcandy's Accused Products meet all elements of at least claim 20 of the '120 Patent.

21. Regarding the preamble of claim 20, to the extent the preamble is determined to be limiting, the Accused Products provide the features described in the preamble, which recites a "wireless earbud having an idle mode and an operational mode." The Accused Products, including at least the Skullcandy Rail ANC True Wireless earbuds, turn off (i.e., enter "idle mode") when placed in the charging case for charging, and will turn on (i.e. enter "operational mode") when removed from the case and inserted into the ears.[1]

[1] *See* https://support.skullcandy.com/hc/en-us/articles/14126116233239-Rail-ANC (last visited May 8, 2024).

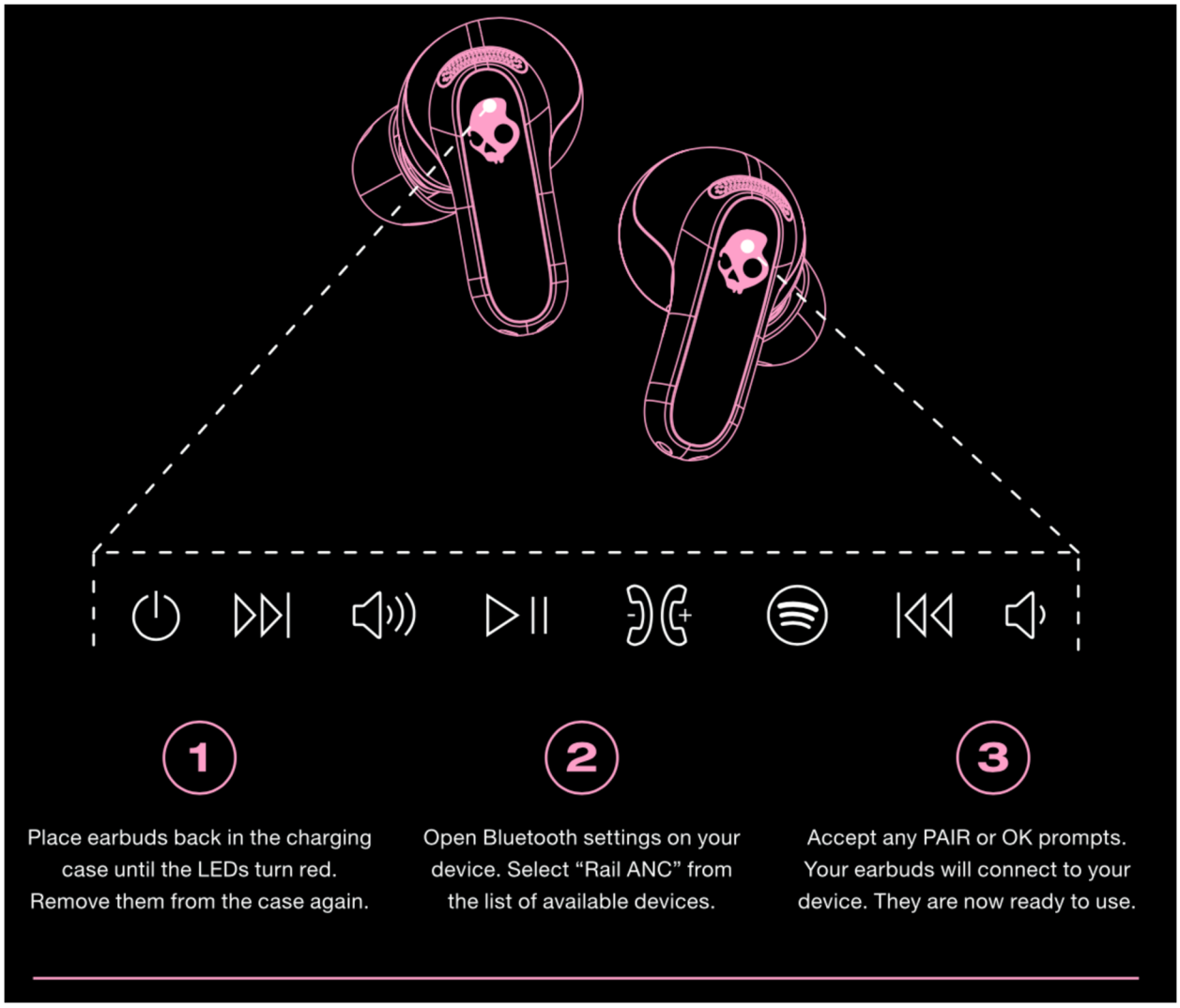

22. Limitations A through D respectively require the wireless earbud to have [A] an earbud housing; [B] a loudspeaker element; [C] a rechargeable battery; and [D] at least one main printed circuit board having disposed thereon circuitry for wireless radio communication, audio codec and earbud operation control. The Accused Products, including at least the Skullcandy Rail ANC True Wireless earbuds, include an earbud housing, a loudspeaker, a rechargeable battery, and a printed circuit board which supports Bluetooth (i.e. "wireless radio communication"), multiple audio codecs, and earbud operations, such as play/pause and volume control.

23. The Rail ANC True Wireless earbuds have a housing and a loudspeaker element as seen in the image below[2]:

24. The Accused Products, including the Rail ANC True Wireless earbuds, also have a rechargeable battery which holds enough charge for 38 hours of playtime and includes the "Rapid Charge" feature.[3] Similarly, the wireless charging case is advertised as holding "an additional 28 hours of play time with ANC off and 20 with ANC on."[4]

25. On information and belief the Rail ANC True Wireless earbuds also have at least one main printed circuit board having circuitry for wireless radio communication, audio codec and earbud operation control. More specifically, on information and belief, the Rail ANC True Wireless

---

[2] *See* https://www.skullcandy.com/products/rail-anc-true-wireless-earbuds?variant=42010459308089&maas=maas_adg_api_8445262540301_macro_1_maas&ref_=aa_maas&aa_campaignid=20580194286&aa_adgroupid=&aa_creativeid=ad-__dev-c_ext-&gad_source=1&gclid=CjwKCAjwi_exBhA8EiwA_kU1MitLlFlgaQvnJ2mN2mKWJjq6r22JV1qaGNnCBKVW6k5qcBFCTCkf3xoCL7wQAvD_BwE (last visited May 8, 2024).
[3] *See* https://www.skullcandy.com/products/rail-anc-true-wireless-earbuds (last visited May 8, 2024).
[4] *See* https://support.skullcandy.com/hc/en-us/articles/14126116233239-Rail-ANC (last visited May 8, 2024).

earbuds "employ[] Bluetooth 5.2 for the Rail ANC with AAC and SBC codecs"[5] and provide on-ear controls with customizable buttons.[6]

26. Limitation [E] requires "wherein the circuitry is configured for automatic power preservation by: detecting connection of said battery to a charger and in response entering the idle mode, wherein existing connections to a second wireless earbud and to a wireless audio streaming host device will be disconnected."

27. As noted above with respect to the preamble, the Accused Products, including the Skullcandy Rail ANC True Wireless earbuds automatically turn off (i.e. enter "idle mode") and disconnect any Bluetooth connections when a connection to the charging case is detected. Skullcandy's support documentation clarifies: "Your earbuds bill automatically turn ON when you remove them from the case, and they'll automatically turn OFF when you put them back in the case."[7] On information and belief, when the earbuds are powered off, any existing connections to a second wireless earbud and/or to a wireless audio streaming host device will be disconnected.

28. Limitations [F] and [G] respectively require: "detecting disconnection of said battery from said charger and in response entering the operational mode by: attempting a true wireless stereo, TWS, reconnection with the second wireless earbud"; and "if the attempt is successful, operating the wireless earbud as a TWS audio receiver and otherwise operating the wireless earbud as a mono wireless audio receiver."

29. The Accused Products, including the Skullcandy Rail ANC True Wireless earbuds, meet these limitations by automatically attempting a Bluetooth connection when removal from the

---

[5] https://www.soundguys.com/skullcandy-rail-anc-review-102191/ (last visited May 10, 2024).
[6] *See* https://www.skullcandy.com/products/rail-anc-true-wireless-earbuds (last visited May 8, 2024).
[7] *See* https://support.skullcandy.com/hc/en-us/articles/14126116233239-Rail-ANC (last visited May 8, 2024).

charging case is detected. Following which, the Skullcandy Rail ANC True Wireless earbud syncs with the second earbud (forming a "TWS reconnection"). According to Skullcandy support documentation for the Accused Products, when you "[r]emove [the earbuds] from the case … you will hear the Power On "ping" Tone, battery life voice prompt, and the "connected" and "voice control ON" voice prompts if you had previously paired and linked with the Skull-iQ App."[8] "[E]ach time you power on your earbuds they will automatically sync to the 2 most recently paired devices."[9]

30. On information and belief, if only one earbud is used, or if the sync to the second earbud fails, then the earbud will operate as a mono wireless audio receiver. According to Skullcandy support documentation: "Sometimes you want to be able to hear your music, but still hear what's going on around you. When you want to do that, you can use just one earbud. We call this Solo Mode. Both the left and right earbuds can be used in Solo Mode. To use Solo Mode when you've previously paired to your earbuds, simply remove either earbud from the charge case and it will function with both phone calls and music."[10]

31. Limitations [H] and [I] respectively require: "if operated as a TWS audio receiver, determining whether the wireless earbud is a master device or a slave device with respect to the second wireless earbud"; and "if the wireless earbud is determined to be a master device, attempting to reconnect with the wireless audio streaming host device and other known wireless audio streaming host devices if applicable."

---

[8] *See* https://support.skullcandy.com/hc/en-us/articles/14126116233239-Rail-ANC (last visited May 8, 2024).
[9] *See* https://support.skullcandy.com/hc/en-us/articles/14126116233239-Rail-ANC (last visited May 8, 2024).
[10] *See* https://support.skullcandy.com/hc/en-us/articles/14126116233239-Rail-ANC (last visited May 8, 2024).

32. On information and belief, with the Accused Products, including the Skullcandy Rail ANC True Wireless earbuds, the earbud issuing the sync request to the other earbud and connecting to the wireless audio streaming device will be designated as the primary receiver (*i.e.*, the "master device") and such other earbud will be the secondary receiver (*i.e.*, the "slave device"). As noted in support documentation for the Rail ANC True Wireless earbuds, after operating an earbud in Solo Mode "[t]o use both earbuds again, simply remove the other bud from the case at any time, you will hear the power on 'ping' tone, and your audio begins to seamlessly stream back into Stereo Mode" and "each time you power on your earbuds they will automatically sync to the 2 most recently paired devices[.]" [11]

33. Limitation [J] requires "if reconnection with the wireless audio streaming host device fails, initiate a pairing procedure with the wireless audio streaming host device and other known wireless audio streaming host devices if applicable."

34. On information and belief, in the operation of Accused Products, including the Skullcandy Rail ANC True Wireless earbuds, after the earbuds are powered off (*i.e.*, causing reconnection with the audio streaming host device to fail), upon being turned back on they will initiate a pairing procedure before pairing.

35. When using an Android device, the Skullcandy Rail ANC True Wireless earbuds will initiate a paring procedure to connect with the Android device by sending a signal to the device indicating that the earbuds are available to pair with the device.

[11] *See* https://support.skullcandy.com/hc/en-us/articles/14126116233239-Rail-ANC (last visited May 8, 2024).

36. The following series of screengrabs demonstrate the Skullcandy Rail ANC True Wireless earbuds' initiation of a pairing procedure when reconnection with the wireless audio streaming host device fails.

37. First, the Skullcandy Rail ANC True Wireless earbuds are paired with an Android device (the "wireless audio streaming host device"). This screengrab shows the Skullcandy Rail ANC True Wireless earbuds being available to pair with an Android device:

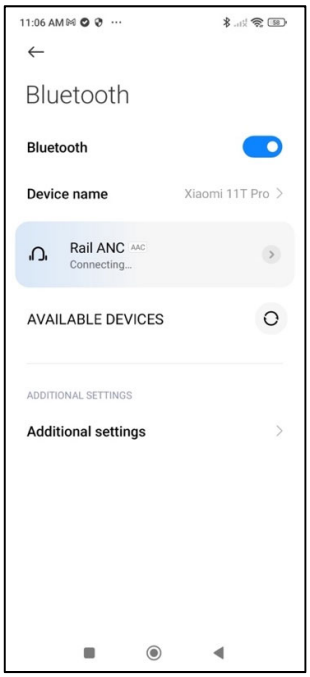

38. Following the initial pairing between the Android device and the Skullcandy Rail ANC the Android will show a pair screen.

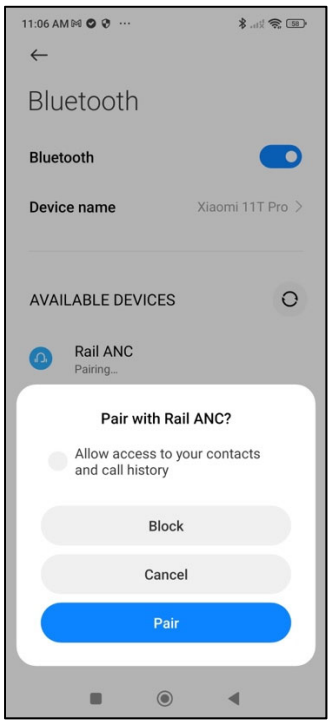

39. Once the pairing is complete the Android device will show that it is paired with the Skullcandy Rail ANC True Wireless earbuds.

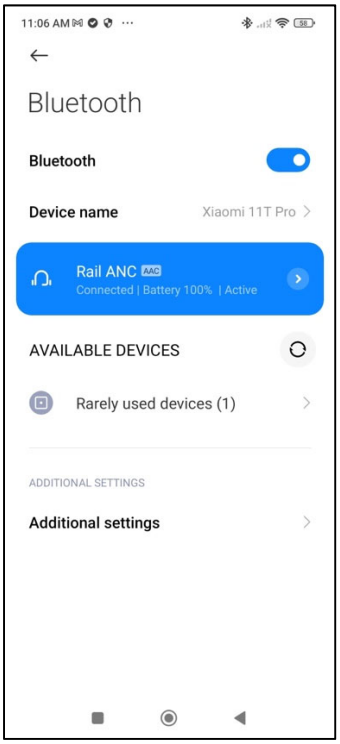

40. When the Skullcandy Rail ANC True Wireless earbuds are put back into the charging case and then removed again the Android device will show that the earbuds are available devices for pairing.

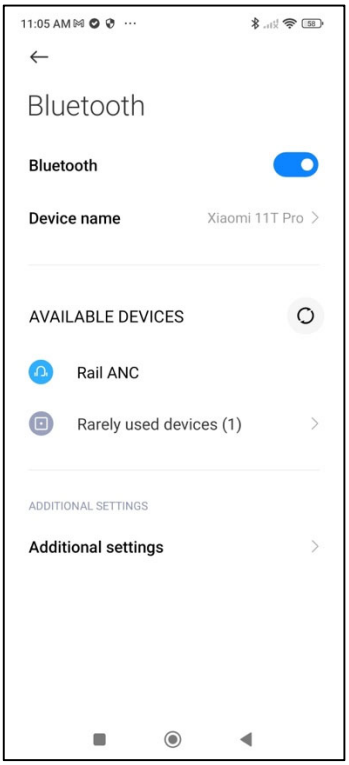

41. The Android device will then automatically connect to the Skullcandy Rail ANC True Wireless earbuds.

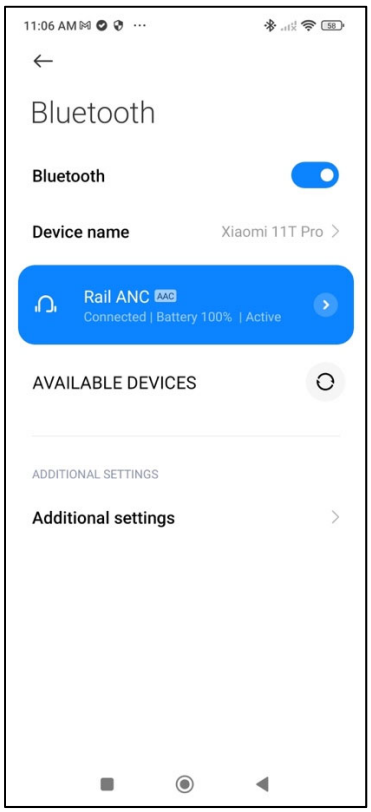

42. When the Android device is connected to the Skullcandy Rail ANC True Wireless earbuds the Rail ANC earbuds are undetectable by an iPhone.

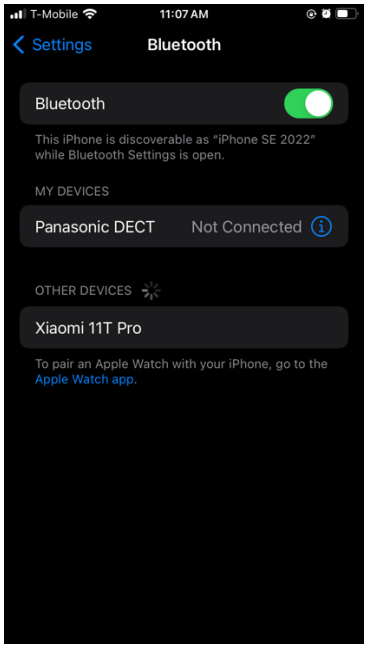

43. If, however, the Android device's Bluetooth is switched off when the Skullcandy Rail ANC True Wireless earbuds are taken out of their case, thereby causing reconnection with the wireless audio streaming host to fail, the Rail ANC earbuds initiate a pairing procedure with other known host devices, including, for example, the iPhone to which the Rail ANC earbuds were previously undetectable.

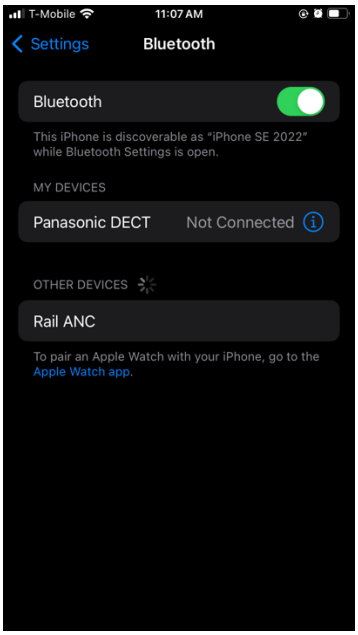

44. Accordingly, Skullcandy has directly infringed and continues to directly infringe one or more claims of the '120 Patent, including at least representative claim 20, in violation of 35 U.S.C. §§ 271(a) by, without authority, making, using, offering for sale, and/or selling the infringing products, systems, methods, and/or computer programs within the United States and importing the infringing products, systems, methods, and/or computer programs into the United States.

45. Skullcandy's infringing activities have and continue to be without authority or license under the '120 Patent.

46. Earin has and continues to suffer damages as a direct and proximate result of Skullcandy's direct infringement of the '120 Patent.

47. Earin is entitled to recover: (i) damages adequate to compensate Earin for Sennheiser's direct infringement of the '120 Patent, which at a minimum, amounts to a reasonable royalty; (ii) attorney's fees; and (iii) costs.

JURY DEMAND

48. Pursuant to Federal Rule of Civil Procedure 38(b), Earin demands a trial by jury of all issues so triable.

PRAYER FOR RELIEF

WHEREFORE, Earin respectfully requests judgment against Skullcandy as follows:

A. that this Court adjudge that Skullcandy infringes the '120 Patent;

B. that this Court ascertain and award Earin damages under 35 U.S.C. § 284 sufficient to compensate for Skullcandy's infringement, including but not limited to infringement occurring before the filing of this lawsuit;

C. that this Court ascertain and award Earin any post-judgment ongoing royalties under 35 U.S.C. § 284 as may be appropriate;

D. that this Court award Earin any applicable prejudgment and post-judgment interest; and

E. that this Court award Earin such other relief at law or in equity as the Court deems just and proper.

JURY DEMAND

49. Pursuant to Federal Rule of Civil Procedure 38(b), Earin demands a trial by jury of all issues so triable.

Dated: May 13, 2024

Respectfully submitted,

FARNAN LLP

/s/ Michael J. Farnan

Brian E. Farnan (Bar No. 4089)
Michael J. Farnan (Bar No. 5165)
919 N. Market St., 12th Floor
Wilmington, DE 19801
(302) 777-0300
bfarnan@farnanlaw.com
mfarnan@farnanlaw.com

Cristofer I. Leffler (admitted *pro hac vice*)
FOLIO LAW GROUP PLLC
1200 Westlake Ave. N., Suite 809
Seattle, WA 98109
Tel: (206) 880-1802
Email: cris.leffler@foliolaw.com

Attorneys for Plaintiff

EXHIBIT A

US009402120B2

(12) **United States Patent**
Lindén et al.

(10) **Patent No.: US 9,402,120 B2**
(45) **Date of Patent: Jul. 26, 2016**

(54) **WIRELESS EARBUDS**

(71) Applicant: **Epickal AB**, Lund (SE)

(72) Inventors: **Olle Lindén**, Höllviken (SE); **Kiril Trajkovski**, Klagshamn (SE); **Per Sennström**, Malmö (SE); **Carl Ståhl**, Malmö (SE); **Markus Millfjord**, Halmstad (SE); **Henrik Hovmøller**, Holbæk (DK)

(73) Assignee: **EPICKAL AB**, Lund (SE)

(*) Notice: Subject to any disclaimer, the term of this patent is extended or adjusted under 35 U.S.C. 154(b) by 0 days.

(21) Appl. No.: **14/478,698**

(22) Filed: **Sep. 5, 2014**

(65) **Prior Publication Data**

US 2016/0073188 A1 Mar. 10, 2016

(51) **Int. Cl.**
H04R 1/10 (2006.01)
H04R 5/033 (2006.01)

(52) **U.S. Cl.**
CPC ***H04R 1/1025*** (2013.01); ***H04R 5/033*** (2013.01); *H04R 2420/07* (2013.01)

(58) **Field of Classification Search**
CPC . H04S 2420/01; H04S 2400/01; H04S 1/002; H04S 1/005; H04S 2420/03; H04S 5/00
USPC 381/309
See application file for complete search history.

(56) **References Cited**

U.S. PATENT DOCUMENTS

6,760,459	B2 *	7/2004	Bae	H04R 1/1025 379/430
8,186,022	B2 *	5/2012	Roser	H04R 1/1091 24/11 R
8,515,103	B2 *	8/2013	Mei	H04R 1/1016 381/309
8,867,748	B2 *	10/2014	Posa	H04H 20/48 381/3
8,867,758	B2 *	10/2014	Terlizzi	H01R 13/2428 379/428.01
8,891,800	B1 *	11/2014	Shaffer	H04R 1/1025 379/437
9,113,254	B2 *	8/2015	Cotha	H04R 1/1058
9,148,717	B2 *	9/2015	Shaffer	H04R 1/1025
2008/0181442	A1	7/2008	Goldstien et al.	
2009/0010461	A1 *	1/2009	Klinghult	A61B 5/0002 381/309
2010/0290637	A1	11/2010	Lerner	
2014/0140529	A1 *	5/2014	Wei	H04R 1/1091 381/74
2014/0166122	A1	6/2014	Goldstien et al.	
2015/0245127	A1	8/2015	Shaffer	
2015/0350762	A1	12/2015	Birger et al.	

FOREIGN PATENT DOCUMENTS

EP	2640170	A1	9/2013
WO	2010132359	A2	11/2010

OTHER PUBLICATIONS

Invitation to pay additional fees from corresponding Int'l Appl'n No. PCT/SE2015/050941 mailed Dec. 18, 2015.

* cited by examiner

Primary Examiner — Mark Blouin
(74) *Attorney, Agent, or Firm* — Polster, Lieder, Woodruff & Lucchesi, L.C.

(57) **ABSTRACT**

A wireless earbud has an earbud housing having a longitudinal main axis and an essentially circular cross section, a loudspeaker element, a rechargeable battery, at least one main printed circuit board having disposed thereon circuitry for wireless radio communication, audio codec and earbud operation control, and a charging interface member. The loudspeaker element, the rechargeable battery, the main printed circuit board and the charging interface member are arranged in a successive order along the longitudinal main axis of the earbud housing.

22 Claims, 12 Drawing Sheets

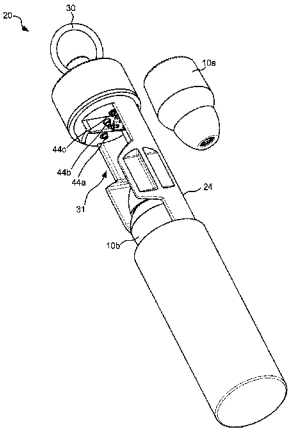

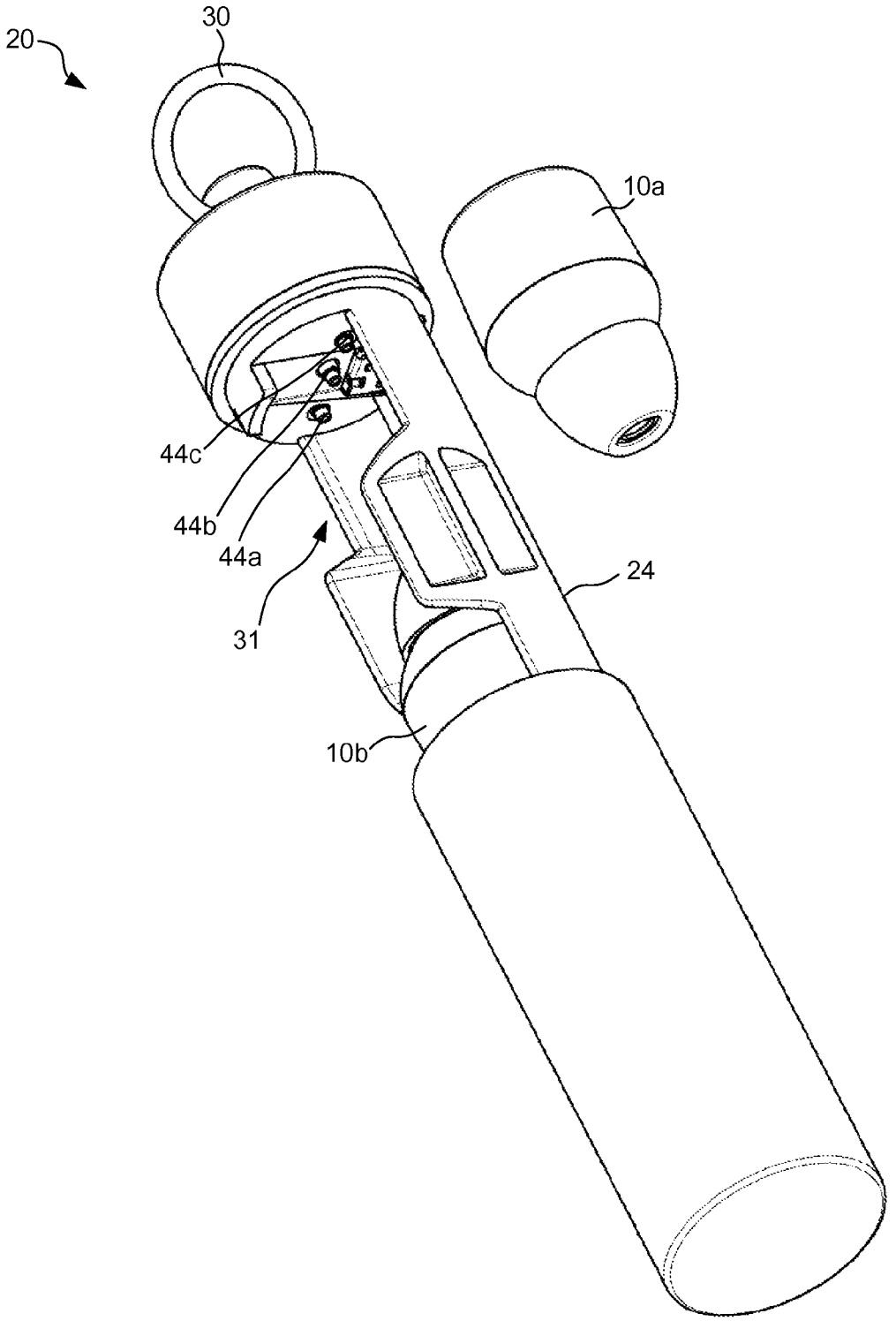

Fig 1

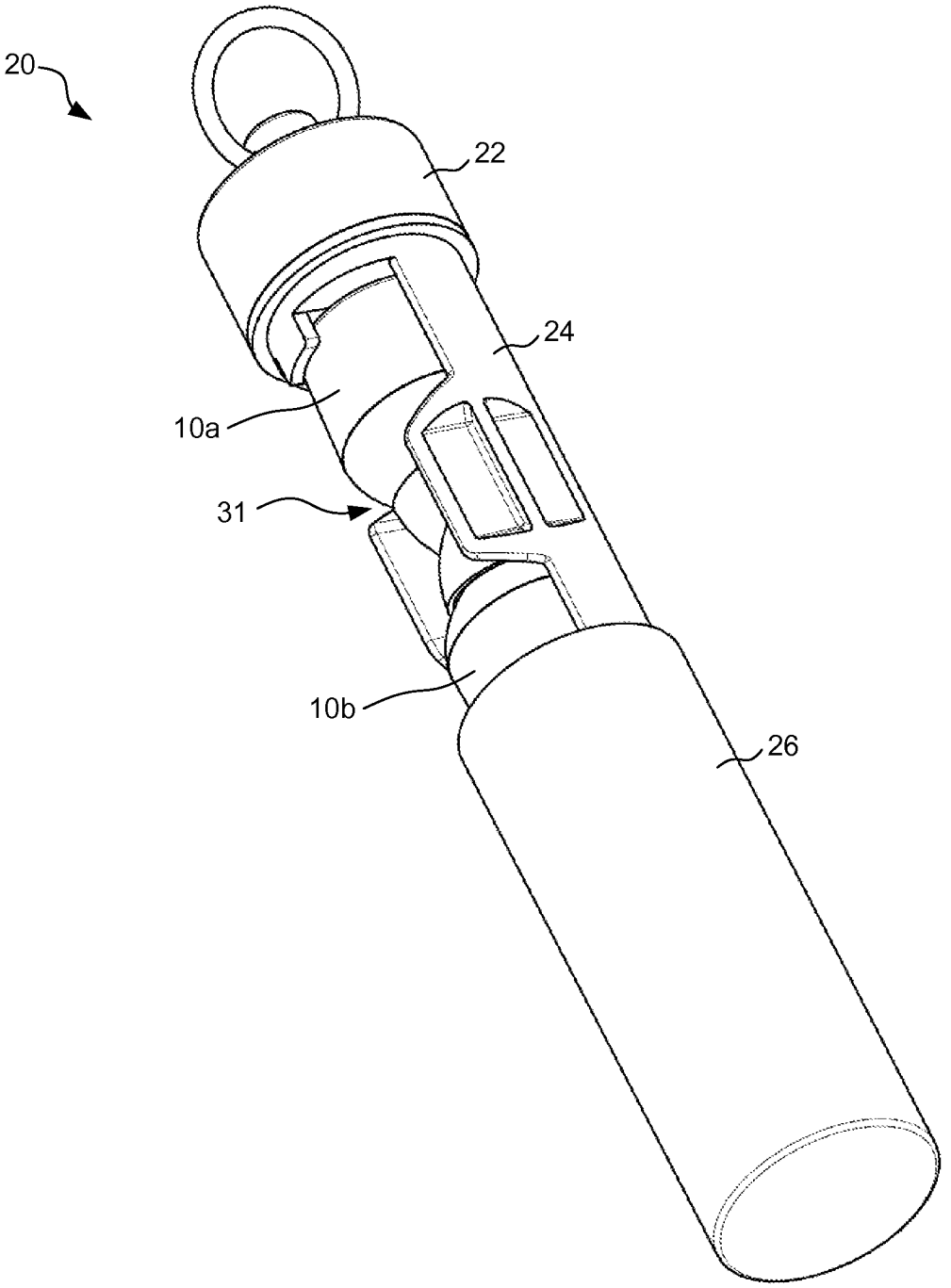

Fig 2

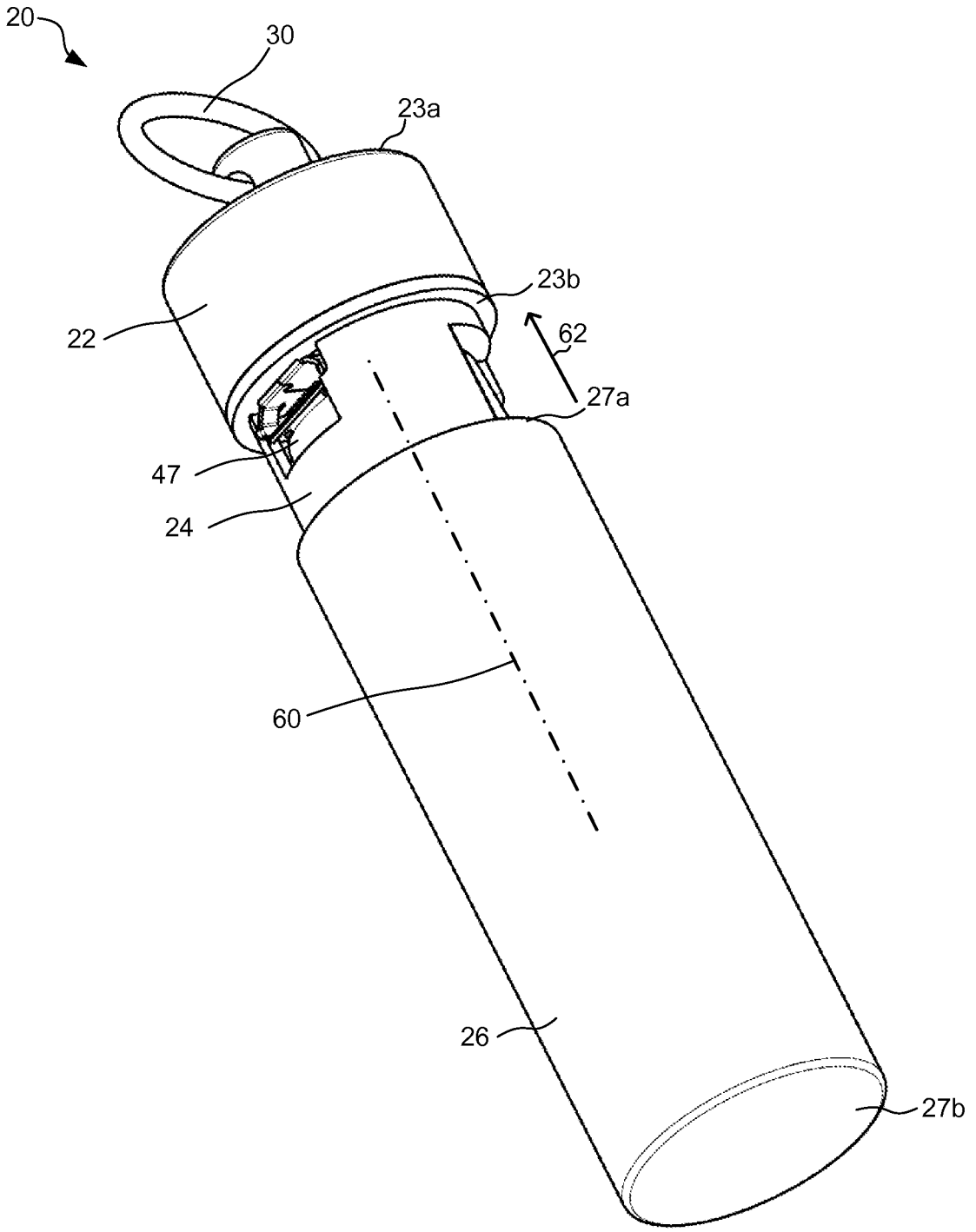

Fig 3

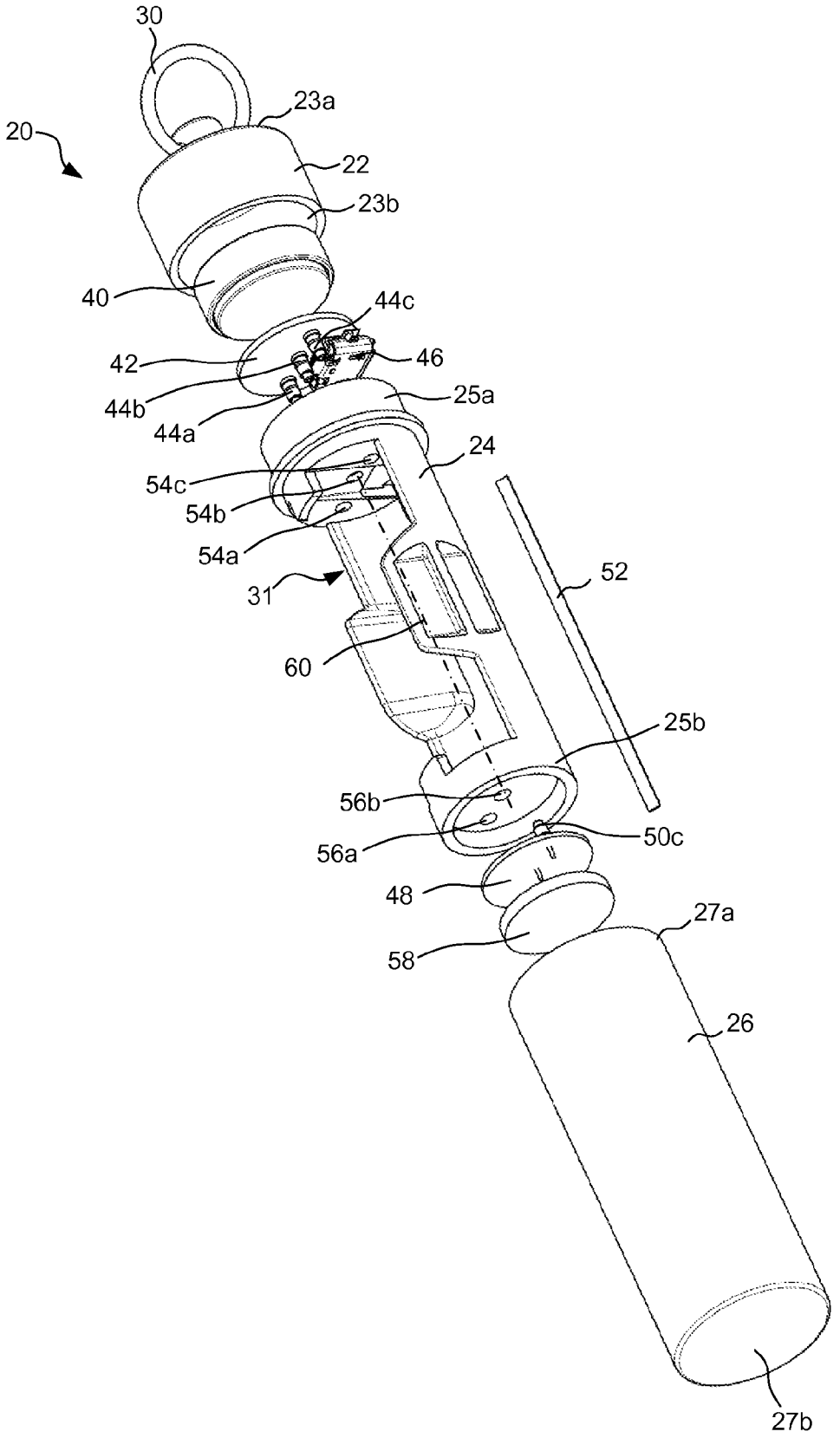
30
23a
20
22
23b
40
44c
42
46
44b
25a
44a
24
54c
54b
54a
52
31
60
25b
56b
50c
56a
48
27a
58
26
27b

Fig 4

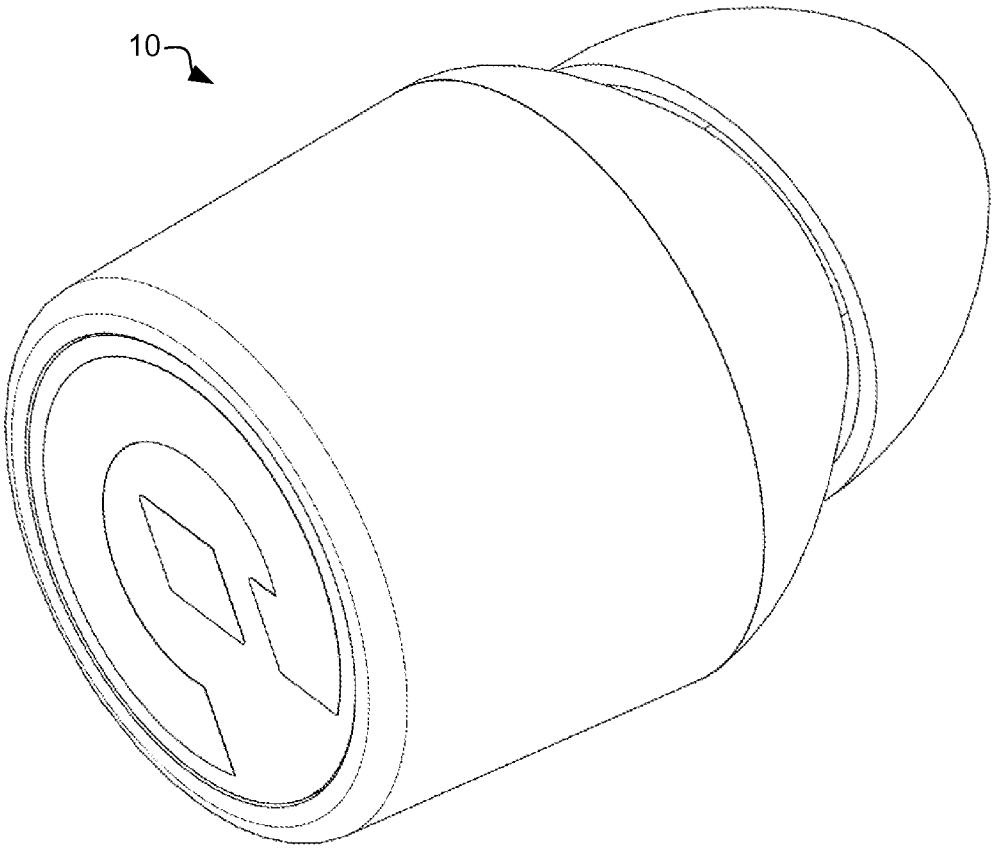

Fig 5

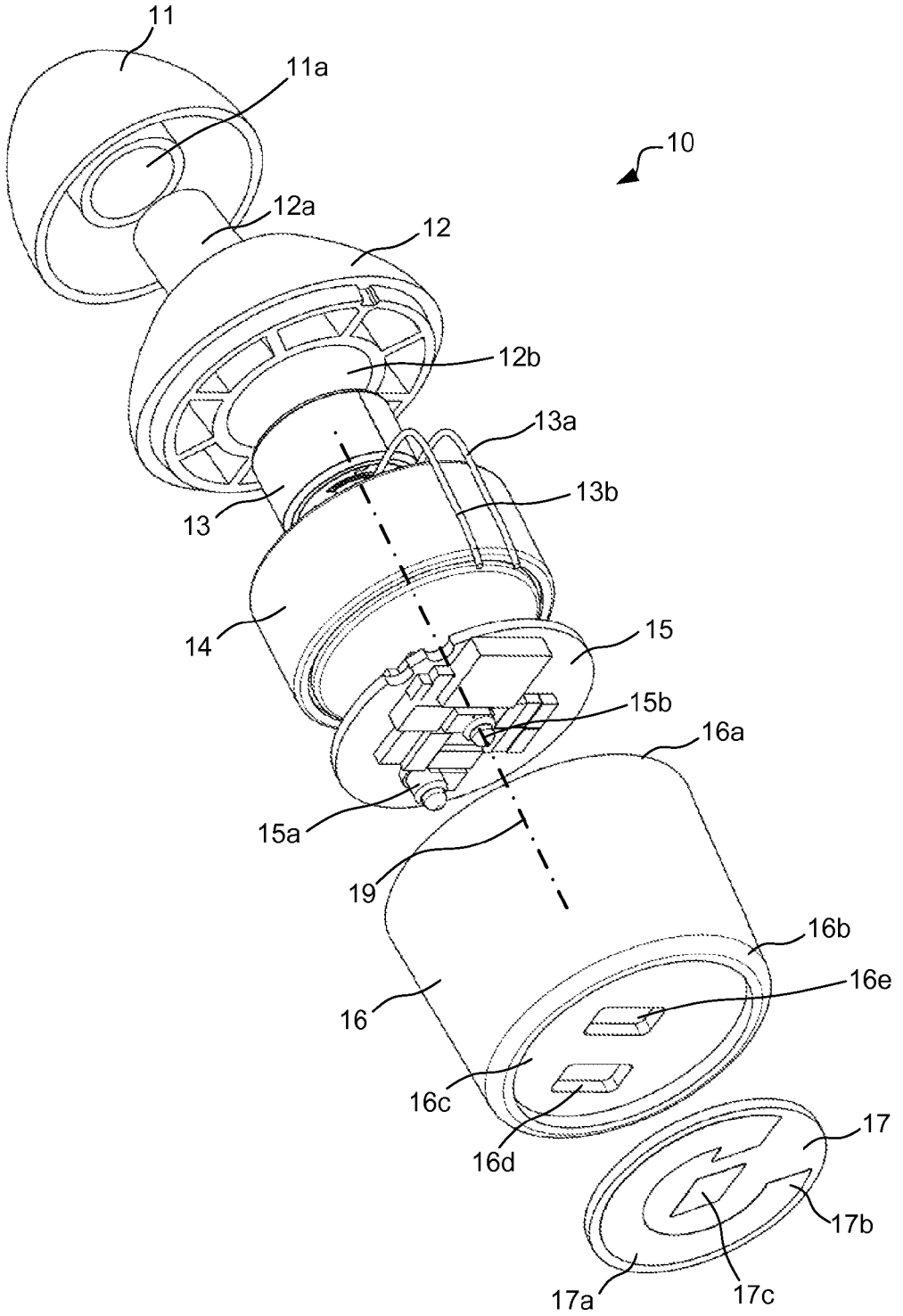
11
11a
10
12a
12
12b
13a
13
13b
14
15
15b
16a
15a
19
16b
16e
16
16c
16d
17
17b
17a
17c

Fig 6

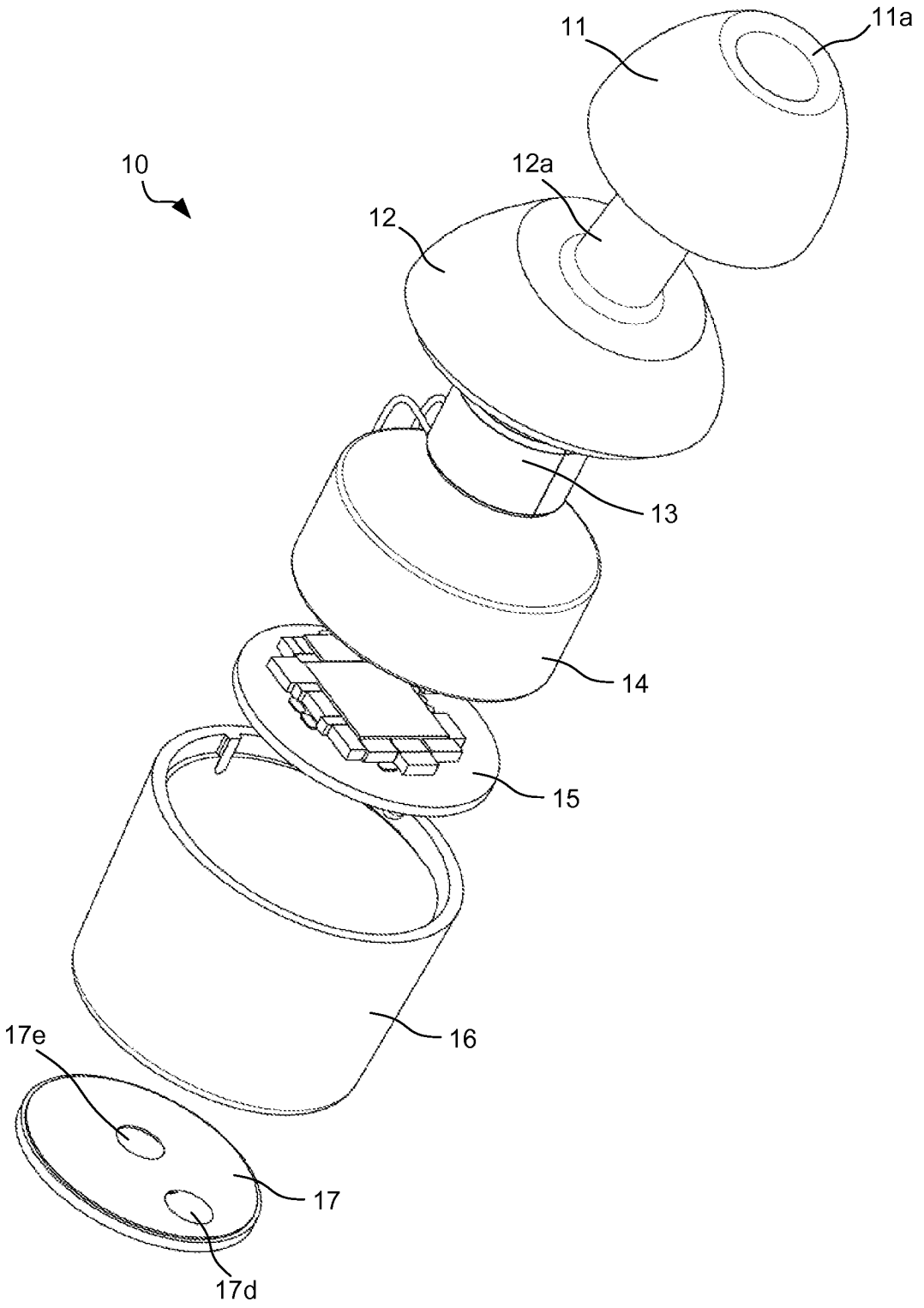

Fig 7

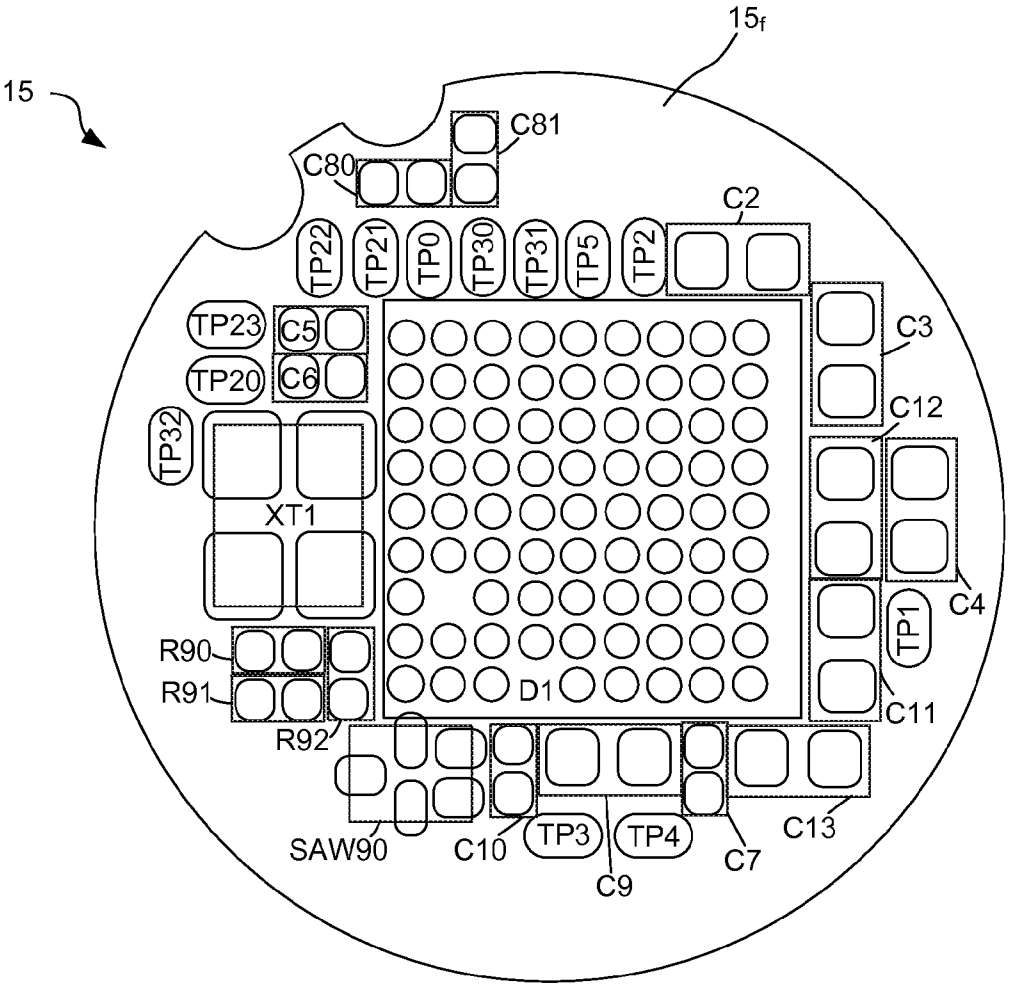
15
15f
C81
C80
C2
TP22
TP21
TP0
TP30
TP31
TP5
TP2
TP23
C5
TP20
C6
C3
C12
TP32
XT1
C4
TP1
R90
R91
D1
C11
R92
SAW90
C10
TP3
TP4
C9
C7
C13

Fig 8

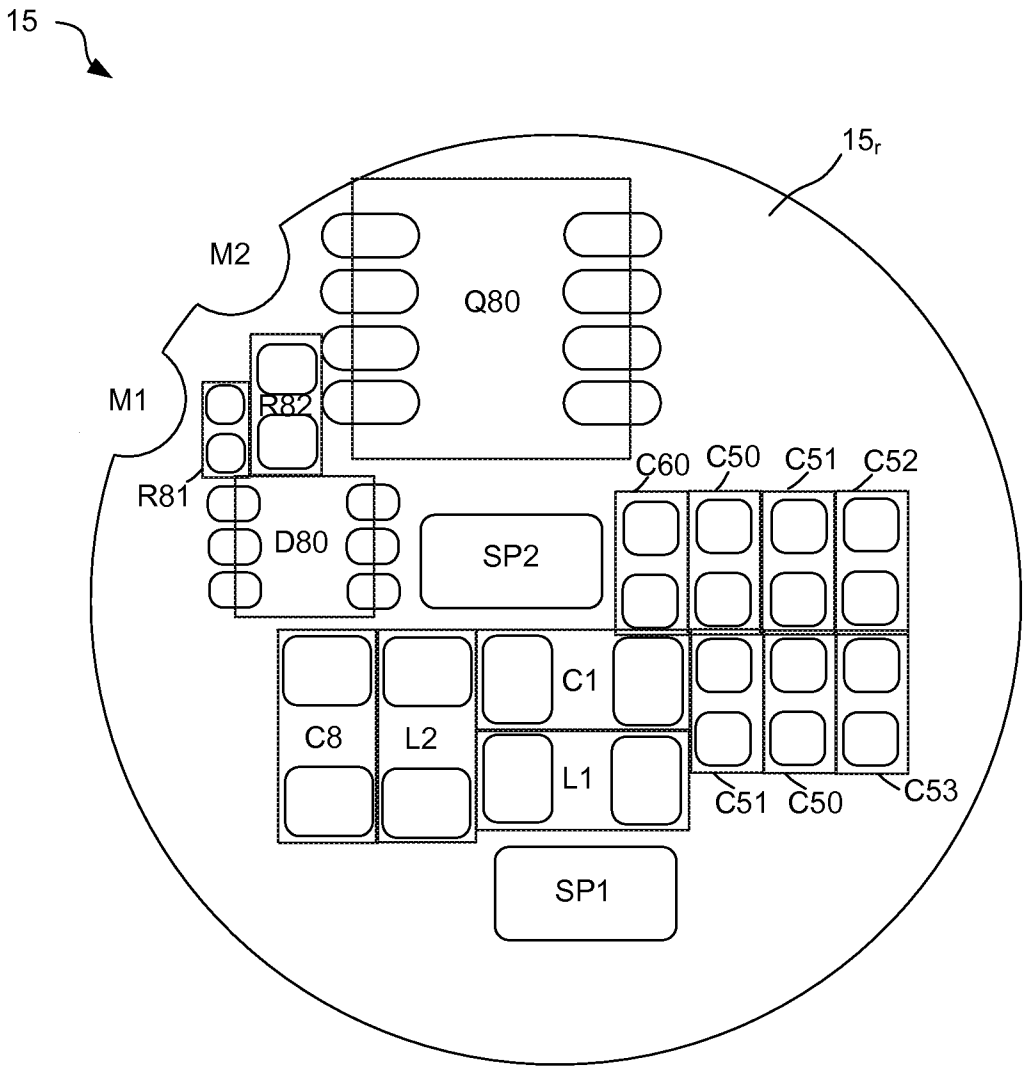
15
15r
M2
M1
Q80
R82
R81
D80
SP2
C60
C50
C51
C52
C1
C8
L2
L1
C51
C50
C53
SP1

Fig 9

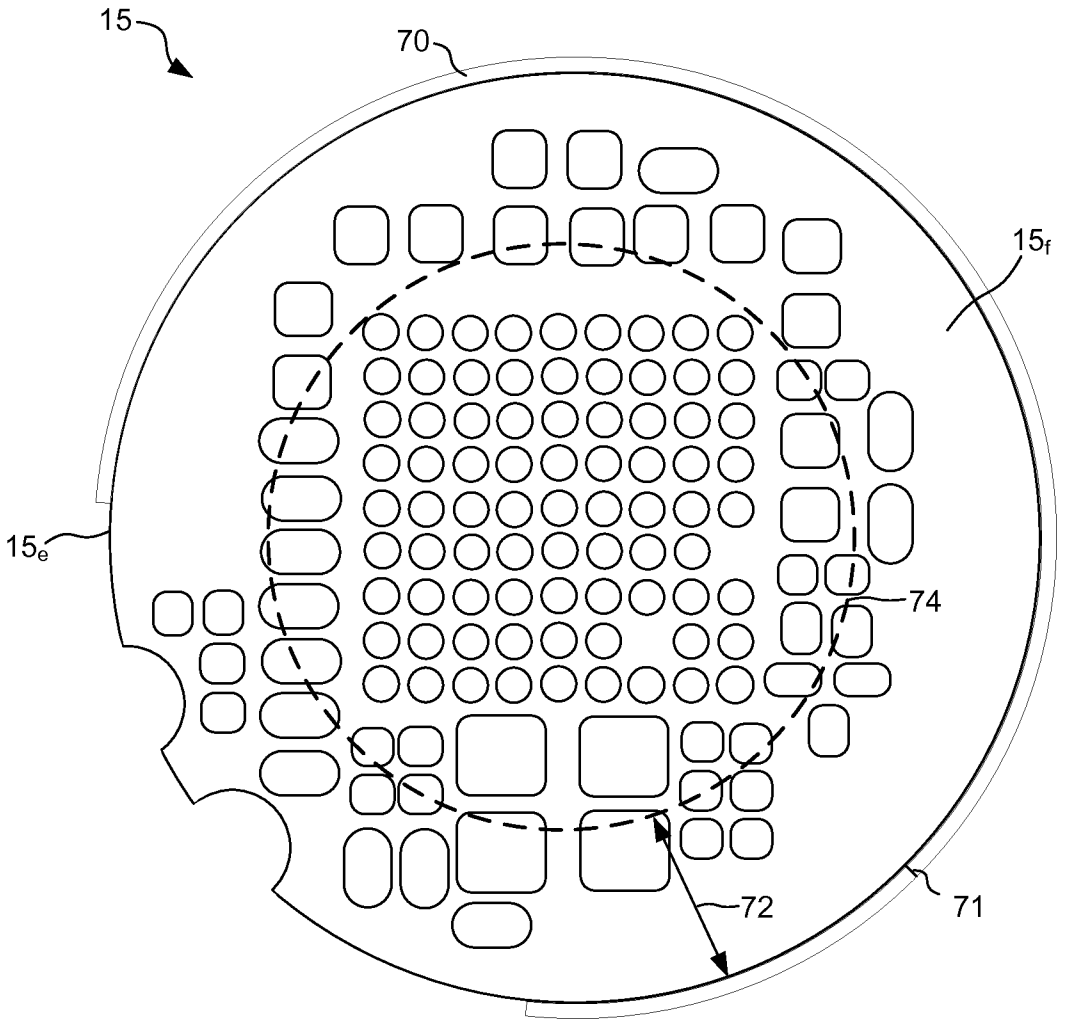

Fig 10

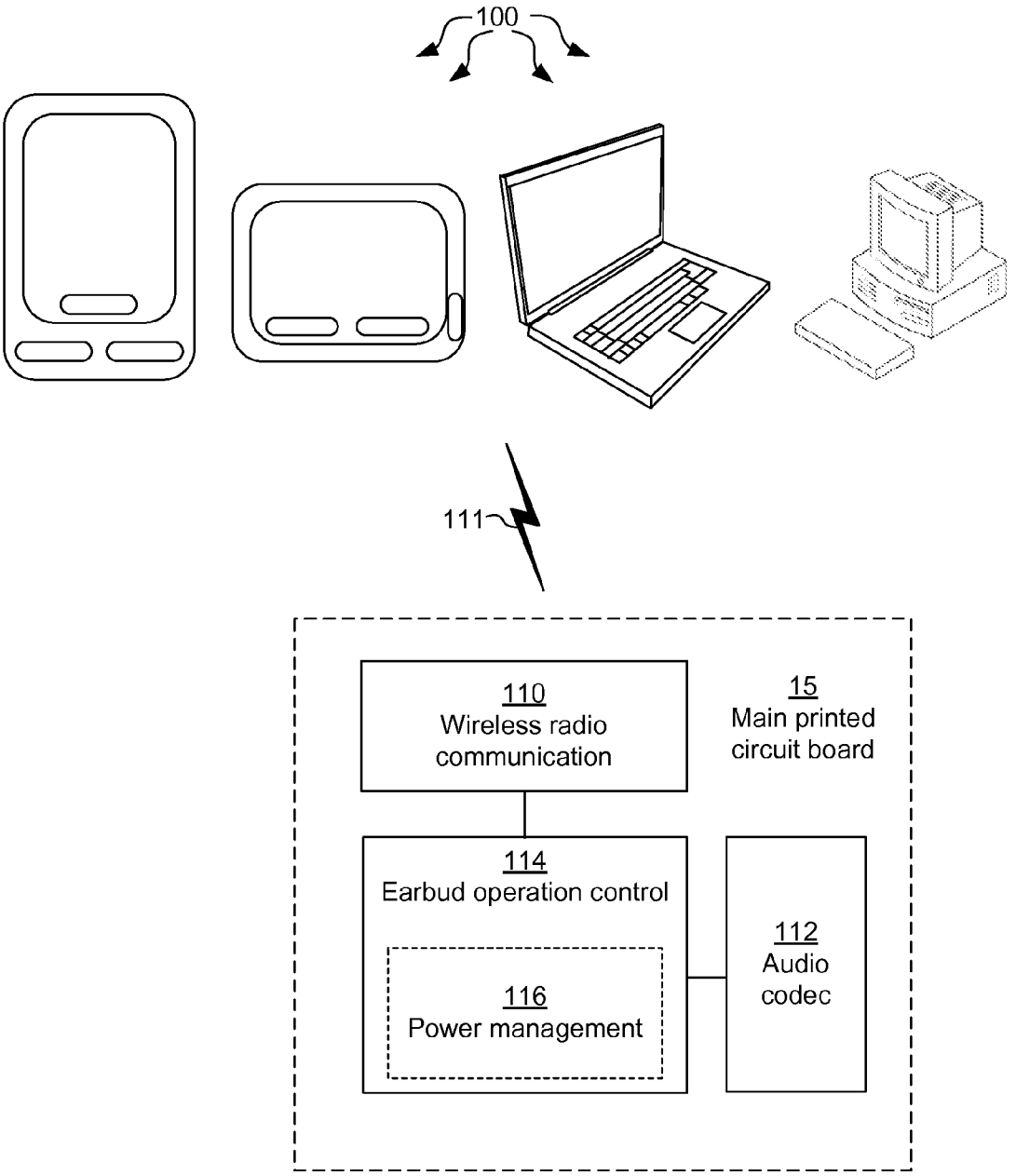
100
111
110
Wireless radio communication
15
Main printed circuit board
114
Earbud operation control
116
Power management
112
Audio codec

Fig 11

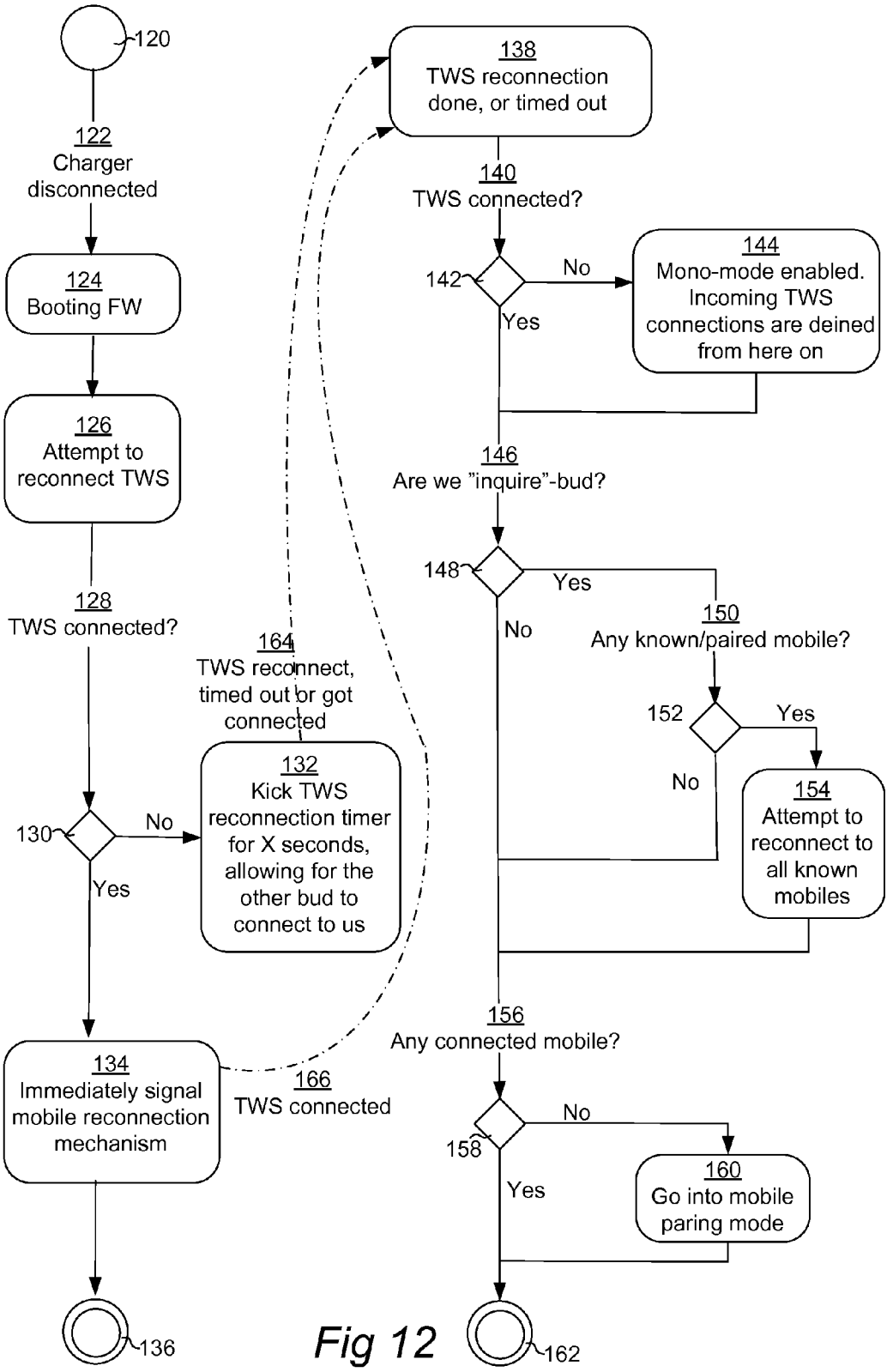
120
122
Charger disconnected
124
Booting FW
126
Attempt to reconnect TWS
128
TWS connected?
130
No
Yes
132
Kick TWS reconnection timer for X seconds, allowing for the other bud to connect to us
164
TWS reconnect, timed out or got connected
134
Immediately signal mobile reconnection mechanism
166
TWS connected
136
138
TWS reconnection done, or timed out
140
TWS connected?
142
No
Yes
144
Mono-mode enabled. Incoming TWS connections are deined from here on
146
Are we "inquire"-bud?
148
Yes
No
150
Any known/paired mobile?
152
Yes
No
154
Attempt to reconnect to all known mobiles
156
Any connected mobile?
158
No
Yes
160
Go into mobile paring mode
162

Fig 12

WIRELESS EARBUDS

TECHNICAL FIELD

The present invention generally relates to the field of wireless audio playback equipment, and more particularly to wireless earbuds and to storage and charging of such earbuds.

BACKGROUND

Wireless earbuds, also known as wireless in-ear headphones or earphones, are expected to become increasingly popular. The advent and rapid growth of digital audio streaming services, such as Spotify, Pandora, Rhapsody, Google Play Music All Access, iTunes Radio, Music Unlimited, Rdio, Xbox Music and Beats Music, are likely drivers behind the expected growing popularity and desire for wireless earbuds.

Important characteristics of wireless earbuds are physical size, convenience and user-friendliness, duration between battery chargings, operational reliability and, of course, the perceived acoustic quality of the streamed audio.

SUMMARY

It is an object of the invention to offer improvements in the technical field of wireless earbuds.

One aspect of the present invention is a wireless earbud, comprising an earbud housing having a longitudinal main axis and an essentially circular cross section, a loudspeaker element, a rechargeable battery, at least one main printed circuit board having disposed thereon circuitry for wireless radio communication, audio codec and earbud operation control, and a charging interface member, wherein the loudspeaker element, the rechargeable battery, the main printed circuit board and the charging interface member are arranged in a successive order along the longitudinal main axis of the earbud housing.

Another aspect of the present invention is a wireless earbud having an idle mode and an operational mode, the wireless earbud comprising an earbud housing, a loudspeaker element, a rechargeable battery, and at least one main printed circuit board having disposed thereon circuitry for wireless radio communication, audio codec and earbud operation control, wherein the circuitry is configured for automatic power preservation by:

detecting connection of said battery to a charger and in response entering the idle mode, wherein existing connections to a second wireless earbud and to a wireless audio streaming host device will be disconnected; and

detecting disconnection of said battery from said charger and in response entering the operational mode by:

attempting a true wireless stereo, TWS, reconnection with the second wireless earbud;

if the attempt is successful, operating the wireless earbud as a TWS audio receiver and otherwise operating the wireless earbud as a mono wireless audio receiver;

if operated as a TWS audio receiver, determining whether the wireless earbud is a master device or a slave device with respect to the second wireless earbud;

if the wireless earbud is determined to be a master device, attempting to reconnect with the wireless audio streaming host device and other known wireless audio streaming host devices if applicable; and

if reconnection with the wireless audio streaming host device fails, initiate a pairing procedure with the wireless audio streaming host device and other known wireless audio streaming host devices if applicable.

Still another aspect of the present invention is a wireless audio streaming host device for use with a first wireless earbud and a second wireless earbud, the wireless audio streaming host device having a controller configured for:

receiving, by wireless communication, a message from the first earbud, the message indicating a current battery charge status for the first earbud;

receiving, by wireless communication, a message from the second earbud, the message indicating a current battery charge status for the second earbud;

determining which one of the first and second earbuds has a current master device role and a current slave device role, respectively;

assessing, based on the determined battery charge statuses for the first and second earbuds and on the determined current roles as master device and slave device, whether a switch in roles is appropriate for the master device and slave device; and, if a switch in roles is found appropriate:

causing, by wireless communication, the one among the first and second earbuds that currently has the master device role, to assume a slave device role; and

causing, by wireless communication, the other one among the first and second earbuds to assume a master device role.

Embodiments of the invention are defined by the appended dependent claims and are further explained in the detailed description section as well as on the drawings.

It should be emphasized that the term "comprises/comprising" when used in this specification is taken to specify the presence of stated features, integers, steps, or components, but does not preclude the presence or addition of one or more other features, integers, steps, components, or groups thereof. All terms used in the claims are to be interpreted according to their ordinary meaning in the technical field, unless explicitly defined otherwise herein. All references to "a/an/the [element, device, component, means, step, etc]" are to be interpreted openly as referring to at least one instance of the element, device, component, means, step, etc., unless explicitly stated otherwise. The steps of any method disclosed herein do not have to be performed in the exact order disclosed, unless explicitly stated.

BRIEF DESCRIPTION OF THE DRAWINGS

Objects, features and advantages of embodiments of the invention will appear from the following detailed description, reference being made to the accompanying drawings.

FIG. **1** is a schematic isometric view of a storage and charging capsule for a pair of wireless earbuds, one of the earbuds being shown positioned in the capsule while the other earbud being shown outside of the capsule.

FIG. **2** is a schematic isometric view of the storage and charging capsule, now showing both earbuds positioned in the capsule, a cover part of the capsule being retracted to expose the earbuds.

FIG. **3** is a schematic isometric view of the storage and charging capsule, showing it in a situation where the cover part has been moved towards a closed position to encapsulate the earbuds.

FIG. **4** is a schematic exploded view of the storage and charging capsule.

FIG. **5** is a schematic isometric view of a wireless earbud.

FIG. **6** is a first, schematic, exploded view of the wireless earbud.

FIG. **7** is a second, schematic, exploded view of the wireless earbud.

FIGS. **8-10** are schematic top views of a main printed circuit board in the wireless earbud.

FIG. **11** is a schematic block diagram of circuitry on the main printed circuit board.

FIG. **12** is a schematic flowchart diagram illustrating a procedure for switching between idle and operational modes for the wireless earbud.

DETAILED DESCRIPTION

Embodiments of the invention will now be described with reference to the accompanying drawings. The invention may, however, be embodied in many different forms and should not be construed as limited to the embodiments set forth herein; rather, these embodiments are provided so that this disclosure will be thorough and complete, and will fully convey the scope of the invention to those skilled in the art. The terminology used in the detailed description of the particular embodiments illustrated in the accompanying drawings is not intended to be limiting of the invention. In the drawings, like numbers refer to like elements.

FIGS. **1-4** illustrate an embodiment of a storage and charging capsule **20** for a pair of wireless earbuds **10***a*, **10***b*. An embodiment of a wireless earbud **10**, which may be one of the wireless earbuds **10***a*, **10***b* and is thus suitable for use with the storage and charging capsule **20**, is illustrated in more detail in FIGS. **5-12**.

As seen in FIGS. **1-4**, the storage and charging capsule **20** comprises a base part **22**, an elongate intermediate part **24** and a cover part **26** which is retractable over the intermediate part **24**. A first end **25***a* of the intermediate part **24** is attached to the base part **22**. An earbud chamber **31** is formed in the intermediate part **24** between its first and second ends **25***a*, **25***b*. The earbud chamber **31** is adapted to receive the pair of wireless earbuds **10***a*, **10***b* arranged one after another along a longitudinal major axis **60** of the intermediate part **24**.

In FIG. **1**, a first earbud **10***a* of the earbud pair is shown outside of the capsule **20**, while the second earbud **10***b* of the earbud pair is shown positioned in the capsule **20**, and more specifically in the earbud chamber **31** formed in the intermediate part **24**. FIG. **2** shows both earbuds **10***a*, **10***b* positioned in the capsule **20**, or more specifically in the earbud chamber **31**.

The cover part **26** of the storage and charging capsule **20** is shaped essentially as a cylinder having an open end **27***a* for receiving the intermediate part **24**, and a closed end **27***b*. The cover part **26** can be placed in a first, or open, position in which the cover part **26** is retracted by a user from the intermediate part **24** to allow insertion or removal of the earbuds **10***a*, **10***b* in or from the earbud chamber **31**. In FIGS. **1** and **2**, the cover part **26** of the capsule **20** is refracted to its first position and exposes the earbud **10***b* and the earbuds **10***a*, **10***b*, respectively.

The cover part **26** can moreover be placed in a second, or closed, position in which the cover part **26** encapsulates the intermediate part **24** with the open end **27***a* of the cover part **26** abutting against the proximal end **23***b* of the base part **22**. FIG. **3** shows the storage and charging capsule **20** in a situation where the cover part **26** has been moved by a user towards the second, or closed, position to encapsulate the earbuds **10***a*, **10***b* in the earbud chamber **31**. The capsule **20** is not fully closed in FIG. **3**; the cover part **26** still has to be moved a distance **62** to abut against the base part **22**.

When the capsule **20** is fully closed, the base part **22** and the cover part **26** will together essentially take the form of a cylinder. A ring **30** is affixed to the distal end **23***a* of the base part **22** to facilitate carrying of the storage and charging capsule **20** in for instance a necklace, a waist belt or a key ring. Thus, accidental loss or damage of the capsule **20** and the earbuds **10***a*, **10***b* contained therein may be prevented. The ring **30** may also act as a handle for the user when retracting the cover part **26** from the base part **22** to insert or remove the earbuds **10***a*, **10***b*.

To keep the cover part **26** safely engaged with the base part **22**, the storage and charging capsule **20** further comprises a first magnet **58** mounted at the second end **25***b* of the intermediate part **24**, and a second magnet (not shown) mounted at the closed end **27***b* of the cover part **26**. The first and second magnets will thus urge the cover part **26** against the base part **22** in the second position of the cover part **26**. Hence, accidental retraction of the cover part **26** and resulting potential loss or damage of the earbuds **10***a*, **10***b* in the capsule **20** may be prevented.

As is best seen in the exploded view of FIG. **4**, the storage and charging capsule **20** has a power source for charging the pair of wireless earbuds **10***a*, **10***b* when placed in the earbud chamber **31** in the intermediate part **24**. In the disclosed embodiment, the power source comprises a rechargeable battery **40** which is accommodated in the base part **22** and which can be charged by a cable connection interface **46**, **47**, such as a micro Universal Serial Bus (USB) interface.

The storage and charging capsule **20** further comprises a power transmission arrangement for feeding electric power from the rechargeable battery **40** to the earbuds **10***a*, **10***b* when placed in the earbud chamber **31** in the intermediate part **24**. As seen in FIG. **4**, the power transmission arrangement comprises a first charging connector disc **42** at the first end **25***a* of the intermediate part **24**. The first charging connector disc **42** comprises a plurality of charging connector elements **44***a*, **44***b*, **44***c* which are symmetrically distributed over a surface of the charging connector disc **42** to allow electric contact with a charging interface of the nearest earbud (earbud **10***a* in FIGS. **1-4**), irrespective of the radial orientation of the earbud in the earbud chamber **31**.

In the disclosed embodiment, there are three charging connector elements **44***a*, **44***b*, **44***c* in the form of pogo pins soldered onto the surface of the charging connector disc **42**, being a circuit board substrate. The resilient tips of the pogo pins **44***a*, **44***b*, **44***c* extend through respective openings **54***a*, **54***b*, **54***c* at the first end **25***a* of the intermediate part **24**. The earbuds **10***a*, **10***b* are to be placed "nose to nose" in the earbud chamber **31** in the intermediate part **24**, with their respective foam tips **11** at the front ends thereof (FIG. **6**) abutting each other.

The resiliency of the foam tips **11** will urge the rear end of the earbud **10***a* towards the resilient tips of the pogo pins **44***a*, **44***b*, **44***c*. As a result, they will reach electric contact with a conductive pattern **17***a* provided at the rear end of the earbud **10***a* (see FIG. **6**). One of the pogo pins **44***a*, **44***b*, **44***c*, such as the center pogo pin **44***b*, will provide a first power supply potential, such as ground or 0 V. The other two of the pogo pins **44***a*, **44***b*, **44***c*, such as the leftmost and rightmost pogo pins **44***a* and **44***c*, will provide a second power supply potential, such as $+V_{cc}$. The opposite order is of course also possible. Particulars of the charging procedure for the earbud will be described in more detail in a later section of this document.

To allow charging also of the other earbud **10***b*, the power transmission arrangement in the storage and charging capsule **20** further comprises a second charging connector disc **48** at the second end **25***b* of the intermediate part **24**. Like the first disc **42**, the second charging connector disc **48** comprises a plurality of charging connector elements symmetrically distributed over a surface of the second charging connector disc

48 to allow electric contact with a charging interface of the other earbud **10***b*, irrespective of its radial orientation in the earbud chamber **31**.

In the disclosed embodiment, the second charging connector disc **48** has three charging connector elements in the form of pogo pins soldered onto the surface of the charging connector disc **48**, being a circuit board substrate. The resilient tips of these pogo pins extend through respective openings at the second end **25***b* of the intermediate part **24**. In FIG. **4**, only one of the pogo pins are seen at **50***c*, and only two of the openings are seen at **56***a*, **56***b*. The charging functions of the pogo pins of the second charging connector disc **48** are analogous to what has been described above for the pogo pins **44***a*, **44***b*, **44***c* of the first charging connector disc **42**.

The charging connector elements **44***a*, **44***b*, **44***c* of the first charging connector disc **42** are connected to the rechargeable battery **40**. The charging connector elements **50***c* of the second charging connector disc **48** are connected to the charging connector elements **44***a*, **44***b*, **44***c* of the first charging connector disc **42**, or directly to the rechargeable battery, by an interconnector **52** extending between the first and second ends **25***a*, **25***b* of the intermediate part **24**.

An embodiment of a wireless earbud **10**, which may be one of the wireless earbuds **10***a*, **10***b* as referred to above in conjunction with the storage and charging capsule **20**, will now be described in more detail with reference to FIGS. **5-12**.

FIGS. **5** to **7** show the wireless earbud **10** in schematic isometric and exploded views. Even though shown in isolation, the earbud **10** will typically be used together with a second earbud to form a pair of earbuds, like the earbud pair **10***a*, **10***b* as previously referred to. One of the earbuds may then be used for playing left-channel stereo audio into one ear of the user, whereas the other earbud will be used for playing right-channel stereo audio into the other ear.

For the illustrated embodiment, the principal components of the wireless earbud **10** are as follows.

The wireless earbud **10** comprises an earbud housing **12**, **16** having a longitudinal main axis **19** and an essentially circular cross section. The wireless earbud **10** further comprises a loudspeaker element **13**, a rechargeable battery **14** and at least one main printed circuit board **15** having disposed thereon circuitry for wireless radio communication, audio codec and earbud operation control. The main printed circuit board **15** and its circuitry will be described in more detail later with reference to the remaining drawings.

Moreover, the wireless earbud **10** comprises a charging interface member **17**. As seen in FIGS. **6** and **7**, the loudspeaker element **13**, the rechargeable battery **14**, the main printed circuit board **15** and the charging interface member **17** are arranged in a successive order along the longitudinal main axis of the earbud housing **12**, **16**. More specifically, in this embodiment, the loudspeaker element **13**, the rechargeable battery **14**, the main printed circuit board **15** and the charging interface member **17** all have a generally circular cross section and are coaxially disposed around the longitudinal main axis **19** of the earbud housing **12**, **16**.

The earbud housing comprises a tapered front housing portion **12** and a rear housing portion **16**. The tapered front housing portion **12** comprises a loudspeaker chamber **12***b* for accommodating the loudspeaker element **13**. Further, the tapered front housing portion **12** comprises a sound guiding channel forming element **12***a* for receiving an earbud foam tip **11** by threading a flexible hollow engagement portion **11***a* thereof onto the sound guiding channel forming element **12***a*. Preferably, the frictional engagement between the sound guiding channel forming element **12***a* and the foam tip **11** is designed to be firm but yet possible to interrupt. This will make sure that the foam tip **11** stays in place during normal use but may be removed for replacement by another foam tip for reasons of wear and tear or user preference.

The loudspeaker element **13** is operatively connected to the audio codec circuitry on the main printed circuit board **15** via two connecting wires **13***a*, **13***b*. In the disclosed embodiment, the loudspeaker element **13** is a magnetic balanced armature (BA) receiver, such as an SR-31843-000 mini siren which is provided by Knowles Electronics, Itasca, Ill., USA. Using a balanced armature receiver for the loudspeaker element **13** is advantageous, since it offers high audio performance at a small physical size. As a result, it has been made possible to design the earbud **10** to have a compact overall size.

In the illustrated embodiment, the rear housing portion **16** is essentially cylindrical or frusto-conical. The rear housing portion **16** comprises a first end **16***a* proximate to the front housing portion **12**, and a second distal end **16***b*. Together with the front housing portion **12**, the rear housing portion **16** accommodates the main printed circuit board **15** inside the rear housing portion **16** nearest its second distal end **16***b*, then the rechargeable battery **14** and the loudspeaker element **13** in successive order towards the front housing portion **12** along the longitudinal main axis **19** of the earbud housing. Thus, a very compact physical size is obtained.

In the illustrated embodiment, the rear housing portion **16** has a wall **16***c* at the second distal end **16***b*. The main printed circuit board **15** is mounted at an internal surface of the wall **16***c*. Moreover, the charging interface member **17** is mounted at an external surface of the wall **16***c* in a shallow protective recess formed by the wall **16***c* and the surrounding parts of the second distal end **16***b* of the rear housing portion **16**.

As seen in FIG. **6**, the wall **16***c* comprises first and second openings **16***d*, **16***e* for providing access from the outside of the wall to the main printed circuit board **15** inside the wall **16***c*, i.e. inside the earbud housing. In the disclosed embodiment, the openings **16***d*, **16***e* in the wall **16***c* at the second distal end **16***b* of the rear housing portion **16** have dual purposes—to allow charging of the rechargeable battery **14**, and to allow programming or writing of data to the circuitry of the main printed circuit board **15** during product manufacture or upgrade.

Hence, the main printed circuit board **15** has mounted thereon first and second charging connectors **15***a*, **15***b* which are aligned with the first and second openings **16***d*, **16***e* in the wall **16***c* to provide electric contact with the charging interface member **17** at the external surface of the wall **16***c* through contact areas **17***d*, **17***e* (FIG. **7**). In the disclosed embodiment, the charging connectors **15***a*, **15***b* are elongated resilient members, such as pogo pins, which protrude partly through the first and second openings **16***d*, **16***e* in the wall **16***c*. In other embodiments, elongated resilient connecting members may protrude from the charging interface member **17** through the first and second openings **16***d*, **16***e* in the wall **16***c* to the main printed circuit board **15**.

In the disclosed embodiment, the charging interface member **17** comprises a circuit board substrate which is mounted to the external surface of the wall **16***c* of the rear housing portion **16**. A conductive pattern **17***a* is printed on the external surface of the circuit board substrate, i.e. the surface which faces away from the wall **16***c*. The conductive pattern is designed for electric contact with a power transmission arrangement in a storage and charging capsule for the wireless earbud, typically the storage and charging capsule **20** previously described with reference to FIGS. **1** to **4**.

The conductive pattern **17***a* on the charging interface member **17** (i.e. circuit board substrate) comprises a first subpattern **17***b* adapted to reach electrical contact with a first

charging connector element of the power transmission arrangement in the storage and charging capsule, i.e. the pogo pin **44***a* or **44***c* when the earbud **10***a* in FIGS. **1** to **4** implements the earbud **10**. The conductive pattern **17***a* also comprises a second sub-pattern **17***c* electrically isolated from the first sub-pattern **17***b* and being adapted to reach electrical contact with a second charging connector element of the power transmission arrangement in the storage and charging capsule (e.g. the pogo pin **50***c* when the earbud **10***b* in FIGS. **1** to **4** implements the earbud **10**).

Advantageously, the conductive pattern **17***a* may be designed as a graphical symbol representing the individual earbud **10**, a product type of the earbud **10**, or a producer or supplier of the earbud **10**. Such a graphical symbol may convey technical or commercial information pertaining to the individual earbud **10**, its product type, or its producer or supplier. When used together with the storage and charging capsule **20** shown in FIGS. **1** to **4**, the symmetrical distribution of the charging connector elements (e.g. **44***a*, **44***b*, **44***c*) over the surface of the charging connector disc (e.g. **42**) will guarantee electrical contact with the conductive pattern **17***a* on the earbud **10**, irrespective of the radial orientation of the earbud **10** in the earbud chamber **31** of the storage and charging capsule **20**. As a result, great flexibility in the layout of the graphical symbol formed by the conductive pattern **17***a* is achieved together with a reliable charging procedure.

As already indicated, in the disclosed embodiment, the first and second openings **16***d*, **16***e* in the wall **16***c* of the rear housing portion **16** of the earbud **10** are aligned with a programming or data writing interface on the main printed circuit board **15**. When assembling the earbud **10** during manufacture, at a late stage in the assembly process, all parts of the earbud **10** may have been assembled except for the charging interface member **17**. Hence, at this stage, the openings **16***d*, **16***e* in the wall **16***c* are available for insertion of probes or electrodes of a programming or data writing device. The probes or electrodes may access the programming or data writing interface on the main printed circuit board **15** to fill memories and registers thereof with software or firmware instructions, and/or data. Such a procedure is commonly referred to as "flashing" (of flash memories). In one embodiment, the earbuds **10***a* and **10***b* are paired with each other by writing the Bluetooth address of the first wireless earbud **10***a* into a memory or register of the second wireless earbud **10***b*, and vice versa.

Once the programming or data writing has been completed, the assembly procedure may be finalized by a step of affixing the charging interface member **17** on the wall **16***c* of rear housing portion **16** of the earbud **10** by means of for instance an adhesive. A medium-strong adhesive may be chosen, in some embodiments, to provide a balance between safe mounting of the charging interface member **17** on the one hand, and the ability of a non-destructive removal thereof at a later time in the event of a need for a product repair or software/firmware/data upgrade.

One inventive aspect can be seen in a kit of parts comprising a storage and charging capsule **20** and two wireless earbuds **10**/**10***a*, **10***b* as referred to above.

Reference is now made to FIGS. **8** to **11** which illustrate the main circuit board **15** and its circuitry in more detail. Starting with FIG. **11**, the main circuit board **15** comprises circuitry for wireless radio communication **110**, audio codec **112** and earbud operation control **114**. Other circuitry may also be included on the main circuit board **15** in different embodiments.

Earbud operation control **114** may include general control of the wireless radio communication **110** e.g. for establishing, maintaining and communicating over a wireless link **111** to a wireless audio streaming host device **100**. The wireless audio streaming host device **100** may for instance be a mobile terminal (e.g. smartphone), personal digital assistant, palmtop computer, tablet computer (a.k.a. surfpad), laptop computer, stationary computer, smart TV or video game console, without limitation. The wireless audio streaming host device **100** may, for instance, be capable of connecting to a mobile telecommunication network in compliance with a mobile telecommunication standard, such as (without limitation) GSM, UMTS, LTE, LTE Advanced, D-AMPS, CDMA2000, FOMA or TD-SCDMA, and/or to a data communication network, such as the Internet.

Earbud operation control **114** may also include power management **116** for receiving power from the rechargeable battery **14** and for charging the rechargeable battery **14** by means of, for instance, the storage and charging capsule **20**.

The main printed circuit board **15** has a front surface $\mathbf{15}_f$, a rear surface $\mathbf{15}_r$ and a circumferential edge surface $\mathbf{15}_e$. In the disclosed embodiment, components are provided on all three surfaces, as is seen in FIG. **8**, FIG. **9** and FIG. **10**, respectively. This is beneficial since it allows a size-efficient implementation, as will be clear from the following disclosure. It is moreover beneficial since it allows an efficient implementation of an antenna function for the wireless radio communication **110**.

In the disclosed embodiment, the main printed circuit board **15** has an essentially circular sectional shape, which again is beneficial for the reasons given above. In other embodiments, the main printed circuit board **15** may have another shape. In still other embodiments, the main printed circuit board **15** may be divided into two or more printed circuit boards. The term "main printed circuit board" as used herein shall therefore include a single printed circuit board but also a plurality of printed circuit board jointly carrying the components disclosed in this document.

FIG. **8** illustrates the schematic layout of the front surface $\mathbf{15}_f$ of the main printed circuit board **15**. FIG. **9** illustrates the schematic layout of the read surface $\mathbf{15}_r$ of the main printed circuit board **15**. Component D**1**, FIG. **8**, is a BlueCore CSR8670 WLCSP System on a Chip (SoC) integrated circuit device for Bluetooth 4.0. The device is available from Cambridge Silicon Radio Ltd, Churchill House, Cambridge Business Park, Cowley Road, Cambridge, CB4 0WZ, UK. Component D**1** features Bluetooth 4.0 software, a radio with an integrated balun, an 80 MHz RISC MCU (application processor) and an 80 MIPS DSP (digital signal processor), internal flash memory, a stereo audio codec, noise reduction, audio interfaces, serial interfaces, integrated switch-mode regulators, linear regulators and battery charger, LED controllers, etc.

In the disclosed embodiment, component Dl implements the circuitry for wireless radio communication **110**, audio codec **112** and earbud operation control **114** as seen in FIG. **11**. In other embodiments, these functions may be implemented by different components, including but not limited to central processing units (CPUs), digital signal processor (DSPs), application-specific integrated circuits (ASICs) or field-programmable gate arrays (FPGAs).

In other embodiments, in addition or as an alternative to Bluetooth 4.0, the wireless earbud **10** may be compliant with other Bluetooth versions, or with AirPlay, PlayFi, Miracast, WiDi, DLNA or Wi-Fi Direct, for instance, or any combinations thereof.

The various elements labeled TPn (n being integer numbers) are input and output terminals for the component D**1**, and serial interfaces. The various capacitors Cn, Rn and Ln (n

being integer numbers) are provided for decoupling and noise filtering purposes. Component XT**1** is a 26 MHz Bluetooth® crystal oscillator. Component SAW**90** is an antenna filter. Components Q**80** and D**80** form a battery safety control circuit. SP**1** and SP**2** are soldering pads for the charging connectors **15***a*, **15***b* (FIG. **6**). Recesses M**1** and M**2** are for receiving power from the rechargeable battery **14**.

Reference is now made to FIG. **10** which illustrates an efficient implementation of an antenna function for the wireless radio communication **110**. The antenna comprises an elongate radiator pattern **70** disposed at the circumference of the main printed circuit board. More specifically, in the disclosed embodiment the elongate radiator pattern **70** of the antenna is disposed on the actual circumferential edge surface $\mathbf{15}_e$ of the circular main printed circuit board **15** along a portion of its circumference, as is seen in FIG. **10**. The elongate radiator pattern **70** is formed by means of gold plating in the disclosed embodiment; other conductive materials are of course possible as an alternative.

The antenna is an inverted F antenna, and the elongate radiator pattern **70** provided on the portion of the circular circumferential edge surface $\mathbf{15}_e$ of the main printed circuit board **15** is tuned for resonance at a quarter-wave length suitable for the circuitry for wireless radio communication **110**. The feeding point is indicated at **71** in FIG. **10**.

The antenna design is efficient for several reasons. First, since a circular geometrical shape represents the largest possible ratio between circumference and area, a sufficient length of the elongate radiator pattern **70** on the circular circumferential edge surface $\mathbf{15}_e$ is available even when the area of the front and rear surfaces $\mathbf{15}_f$, $\mathbf{15}_r$ is limited. Thus, the main printed circuit board **15** can be made compact and still accommodate a sufficiently long antenna **70** for the circuitry for wireless radio communication **110**. Hence, antenna performance can be optimized in the smallest possible space.

Also, since the circuitry for wireless radio communication **110**, audio codec **112** and earbud operation control **114** is disposed on the front and rear surfaces $\mathbf{15}_f$, $\mathbf{15}_r$ of the main printed circuit board **15** with a component concentration towards the center of the front and rear surfaces, a maximum distance **72** is enabled to the component ground plane, as indicated by **74**. Again, antenna performance is optimized.

Further, by integrating the antenna **70** on the main printed circuit board **15** (as opposed to having a separate antenna), the risk is reduced for potential losses due to interconnection. Once more, antenna performance is optimized.

FIG. **12** schematically illustrates a procedure for switching between idle and operational modes for a wireless earbud. The wireless earbud, for instance any of the earbuds **10**, **10***a*, **10***b* referred to above, has an idle mode and an operational mode. The wireless earbud comprises an earbud housing (for instance housing **12**, **16**), a loudspeaker element (for instance loudspeaker element **13**), a rechargeable battery (for instance rechargeable battery **14**), and at least one main printed circuit board having disposed thereon circuitry for wireless radio communication, audio codec and earbud operation control (for instance the main printed circuit board **15** with its circuitry **110**-**116** as previously described). The circuitry is configured for automatic power preservation by performing the following steps.

First, connection of the battery to a charger is detected (not seen in FIG. **12**). This may for instance involve insertion of the earbud into the storage and charging capsule **20** as described above. The detection may be based on a comparison of voltage levels. If the charger supplies charging at a higher voltage, such as 5 V, than the nominal voltage of the rechargeable battery in the earbud, such as 3.3 V, then the higher voltage will indicate connection to a charger.

In response to detecting connection to a charger, the earbud (e.g. earbud **10***a*) will enter idle mode, wherein existing connections to a second wireless earbud (e.g. earbud **10***b*) and to a wireless audio streaming host device (e.g. device **100**) will be disconnected.

Then, at a later point of time when the wireless earbud is removed from the charger, disconnection of the battery from the charger will be detected, see **122** in FIG. **12**. In response, the wireless earbud will enter operational mode by the following steps:

Firmware in the circuitry on the main printed circuit board will boot, see **124** in FIG. **12**. In step **126**, a true wireless stereo, TWS, reconnection with the second wireless earbud will be attempted.

If the attempt is successful, the wireless earbud will be operated as a TWS audio receiver, see **166**, in association with the second wireless earbud. Otherwise, the wireless earbud will be operated as a mono wireless audio receiver, see **144**, if the failure persists after repeated additional attempts, as seen at **132** and **164**.

When the wireless earbud is operated as a TWS audio receiver, as verified at **140** and **142**, it is determined at **146** and **148** whether the wireless earbud is a master device ("inquiry bud") or a slave device with respect to the second wireless earbud.

If the wireless earbud is determined to be a master device, attempts are made at **150** and **154** to reconnect with the wireless audio streaming host device (e.g. device **100**), and other known wireless audio streaming host devices if applicable.

If reconnection with the wireless audio streaming host device (e.g. device **100**) has been successful, see **156** and **158**, then the execution ends at **162** with a successful automatic reconnection both with the second earbud and with the wireless audio streaming host device completely without any use of manual intervention by the earbud user (other than removing the earbud from the charger). Hence, a power-efficient and automatic procedure for switching between idle and operational modes for a wireless earbud, without requiring any manual actuators like buttons, etc, is provided.

Should reconnection with the wireless audio streaming host device (e.g. device **100**) on the other hand fail, a more time and power consuming pairing procedure with the wireless audio streaming host device and other known wireless audio streaming host devices, if applicable, will be initiated, see **158** and **160** in FIG. **12**.

When a pair of earbuds, such as earbuds **10***a* and **10***b*, is used for true wireless stereo streaming from a wireless audio streaming host device, such as device **100** in FIG. **11**, one of the earbuds will have a role as master device with respect to the other one of the earbuds, which will correspondingly be a slave device. This is for instance the case with Bluetooth-based wireless audio streaming. Another inventive power preservation scheme has therefore been provided which compensates for the fact that the master device will consume more power than the slave device. Therefore, after some time, the master device will run out of power and need to be recharged, even though the slave device still may have a decent remaining battery charge status.

According to this inventive aspect, a wireless audio streaming host device is provided for use with a first wireless earbud and a second wireless earbud, for instance earbuds **10***a* and **10***b* according to the previous description. The wireless audio streaming host device may for instance be any of the example devices **100** shown in FIG. **11** and will have a controller in the

form of a CPU, DSP, ASIC, FPGA, etc. The controller will be configured to receive a message from the first earbud by wireless communication, such as Bluetooth. The message will indicate a current battery charge status for the first earbud. Correspondingly, the controller will be configured to receive a message from the second earbud by wireless communication. This message will indicate a current battery charge status for the second earbud.

The controller will determine which one of the first and second earbuds has a current master device role and a current slave device role, respectively.

The controller will then assess, based on the determined battery charge statuses for the first and second earbuds and on the determined current roles as master device and slave device, whether a switch in roles is appropriate for the master device and slave device. The assessment may for instance be based on absolute or relative threshold values. For instance, if the master earbud device has below x % of remaining battery charge, or if the difference in remaining battery charge between the two earbuds exceeds a certain value, a switch of roles may be concluded as appropriate.

If a switch in roles is found appropriate, the controller will cause, again by wireless communication, the one among the first and second earbuds that currently has the master device role, to assume a slave device role. The controller will also cause, by wireless communication, the other one among the first and second earbuds to assume a master device role. The causing may be done by control messages sent by the controller of the wireless audio streaming host device to both earbuds directly, or by a control message sent to the master earbud device that will then in turn send a control message to the slave earbud device, etc. Other ways of causing the switch in roles are also possible, as is believed to be understood per se by those skilled in the art.

The invention has been described above in detail with reference to embodiments thereof. However, as is readily understood by those skilled in the art, other embodiments are equally possible within the scope of the present invention, as defined by the appended claims.

Other inventive aspects are defined in the following numbered clauses.

I. A storage and charging capsule for a pair of wireless earbuds, the storage and charging capsule comprising:

a base part;

an elongate intermediate part, the intermediate part having a longitudinal major axis; and

a cover part being retractable over the intermediate part,

wherein the intermediate part has a first end attached to the base part, a second end, and an earbud chamber formed between the first and second ends, the earbud chamber being adapted to receive the pair of wireless earbuds arranged one after another along the longitudinal major axis of the intermediate part, and

wherein the capsule further has a power source for charging the pair of wireless earbuds when placed in the earbud chamber in the intermediate part.

II. The storage and charging capsule as defined in clause I, wherein the power source comprises a rechargeable battery and wherein the capsule further comprises a power transmission arrangement for feeding electric power from the rechargeable battery to both earbuds when placed in the earbud chamber in the intermediate part.

III. The storage and charging capsule as defined in clause II, the rechargeable battery being accommodated in the base part, wherein the power transmission arrangement comprises a first charging connector disc at the first end of the intermediate part, the first charging connector disc comprising a plurality of charging connector elements symmetrically distributed over a surface of the charging connector disc to allow electric contact with a charging interface of one of the earbuds irrespective of its radial orientation in the earbud chamber.

IV. The storage and charging capsule as defined in clause III, wherein the plurality of charging connector elements are adapted to reach electric contact with a conductive pattern provided at a rear end of the earbud.

V. The storage and charging capsule as defined in clause III, wherein the power transmission arrangement further comprises a second charging connector disc at the second end of the intermediate part, the second charging connector disc comprising a plurality of charging connector elements symmetrically distributed over a surface of the second charging connector disc to allow electric contact with a charging interface of the other earbud irrespective of its radial orientation in the earbud chamber, wherein the charging connector elements of the first charging connector disc are connected to the rechargeable battery, and wherein the charging connector elements of the second charging connector disc are connected to the charging connector elements of the first charging connector disc or to the rechargeable battery by an interconnector extending between the first and second ends of the intermediate part.

VI. The storage and charging capsule as defined in clause I, the cover part being shaped essentially as a cylinder having an open end for receiving the intermediate part, and a closed end, the cover part being placeable in a first position in which the cover part is retracted from the intermediate part to allow insertion or removal of the earbuds in/from the earbud chamber, and in a second position in which the cover part encapsulates the intermediate part with the open end of the cover part abutting against the base part.

VII. The storage and charging capsule as defined in clause VI, further comprising a first magnet mounted at the second end of the intermediate part and a second magnet mounted at the closed end of the cover part, the first and second magnets urging the cover part against the base part in the second position of the cover part.

What is claimed is:

1. A wireless earbud, comprising:

an earbud housing having a longitudinal main axis and an essentially circular cross-section;

a loudspeaker element;

a rechargeable battery;

at least one main printed circuit board having disposed thereon circuitry for wireless radio communication, audio codec and earbud operation control; and

a charging interface member,

wherein the loudspeaker element, the rechargeable battery, the main printed circuit board and the charging interface member are arranged in a successive order along the longitudinal main axis of the earbud housing;

wherein the earbud housing comprises a front housing portion and an essentially cylindrical or frusto-conical rear housing portion, the rear housing portion comprising a first end proximate to the front housing portion and a second distal end, the rear housing portion together with the front housing portion accommodating the main printed circuit board inside the rear housing portion nearest its second distal end, then the rechargeable battery and the loudspeaker element in successive order towards the front housing portion along the longitudinal main axis of the earbud housing.

2. The wireless earbud as defined in claim **1**, wherein the loudspeaker element, the rechargeable battery, the main printed circuit board and the charging interface member all

have a generally circular cross section and are coaxially disposed around the longitudinal main axis of the earbud housing.

3. The wireless earbud as defined in claim **1**, wherein the earbud housing comprises a tapered front housing portion and a rear housing portion, the tapered front housing portion comprising:

a loudspeaker chamber for accommodating the loudspeaker element; and

a sound guiding channel forming element for receiving an earbud foam tip.

4. The wireless earbud as defined in claim **3**, wherein the loudspeaker element is a magnetic balanced armature (BA) receiver.

5. The wireless earbud as defined in claim **1**, the rear housing portion having a wall at the second distal end, wherein the main printed circuit board is mounted at an internal surface of said wall, and wherein the charging interface member is mounted at an external surface of said wall.

6. The wireless earbud as defined in claim **5**, the wall at the second distal end of the rear housing portion comprising first and second openings for providing access from the outside of said wall to the main printed circuit board inside said wall.

7. The wireless earbud as defined in claim **6**, the main printed circuit board having mounted thereon first and second charging connectors being aligned with the first and second openings in said wall for providing electric contact with the charging interface member at the external surface of said wall.

8. The wireless earbud as defined in claim **6**, the first and second openings in said wall being aligned with a programming or data writing interface on the main printed circuit board.

9. The wireless earbud as defined in claim **6**, wherein the charging interface member comprises a circuit board substrate mounted to the external surface of said wall, and a conductive pattern printed on an external surface of the circuit board substrate facing away from said wall, the conductive pattern being designed for electric contact with a power transmission arrangement in a storage and charging capsule for the wireless earbud.

10. The wireless earbud as defined in claim **9**, wherein the conductive pattern of the charging interface member comprises a first sub-pattern adapted to reach electrical contact with a first charging connector element of the power transmission arrangement in the storage and charging capsule, and a second sub-pattern electrically isolated from the first sub-pattern and being adapted to reach electrical contact with a second charging connector element of the power transmission arrangement in the storage and charging capsule.

11. The wireless earbud as defined in claim **9**, wherein the conductive pattern is designed as a graphical symbol representing the individual earbud, a product type of said earbud, or a producer or supplier of said earbud.

12. A wireless earbud, comprising:

an earbud housing having a longitudinal main axis and an essentially circular cross section;

a loudspeaker element;

a rechargeable battery;

at least one main printed circuit board having disposed thereon circuitry for wireless radio communication, audio codec and earbud operation control; the main printed circuit board having a front surface, a rear surface and a circumferential edge surface, wherein the main printed circuit board further comprises an antenna for the circuitry for wireless radio communication, the antenna comprising an elongate radiator pattern disposed at the circumference of the main printed circuit board; and

a charging interface member,

wherein the loudspeaker element, the rechargeable battery, the main printed circuit board and the charging interface member are arranged in a successive order along the longitudinal main axis of the earbud housing.

13. The wireless earbud as defined in claim **12**, wherein the elongate radiator pattern of the antenna is disposed on the circumferential edge surface of the main printed circuit board.

14. The wireless earbud as defined in claim **13**, the main printed circuit board having an essentially circular sectional shape and thus an essentially circular circumference, wherein the elongate radiator pattern of the antenna is provided on the circular circumferential edge surface of the main printed circuit board along a portion of its circumference.

15. The wireless earbud as defined in claim **14**, wherein the antenna is an inverted F antenna, and wherein the elongate radiator pattern provided on the portion of the circular circumferential edge surface of the main printed circuit board is tuned for resonance at a quarter-wave length suitable for the circuitry for wireless radio communication.

16. The wireless earbud as defined in claim **15**, wherein the circuitry for wireless radio communication, audio codec and earbud operation control is disposed on one or both of the front and rear surfaces of the main printed circuit and with a component concentration towards the center of the front and rear surfaces.

17. The wireless earbud as defined in claim **12**, wherein the loudspeaker element, the rechargeable battery, the main printed circuit board and the charging interface member all have a generally circular cross section and are coaxially disposed around the longitudinal main axis of the earbud housing.

18. The wireless earbud as defined in claim **12**, wherein the earbud housing comprises a tapered front housing portion and a rear housing portion, the tapered front housing portion comprising:

a loudspeaker chamber for accommodating the loudspeaker element; and

a sound guiding channel forming element for receiving an earbud foam tip.

19. The wireless earbud as defined in claim **18**, wherein the loudspeaker element is a magnetic balanced armature (BA) receiver.

20. A wireless earbud having an idle mode and an operational mode, the wireless earbud comprising:

an earbud housing;

a loudspeaker element;

a rechargeable battery; and

at least one main printed circuit board having disposed thereon circuitry for wireless radio communication, audio codec and earbud operation control;

wherein the circuitry is configured for automatic power preservation by:

detecting connection of said battery to a charger and in response entering the idle mode, wherein existing connections to a second wireless earbud and to a wireless audio streaming host device will be disconnected; and

detecting disconnection of said battery from said charger and in response entering the operational mode by:

attempting a true wireless stereo, TWS, reconnection with the second wireless earbud;

if the attempt is successful, operating the wireless earbud as a TWS audio receiver and otherwise operating the wireless earbud as a mono wireless audio receiver;

if operated as a TWS audio receiver, determining whether the wireless earbud is a master device or a slave device with respect to the second wireless earbud;

if the wireless earbud is determined to be a master device, attempting to reconnect with the wireless audio streaming host device and other known wireless audio streaming host devices if applicable; and

if reconnection with the wireless audio streaming host device fails, initiate a pairing procedure with the wireless audio streaming host device and other known wireless audio streaming host devices if applicable.

21. The wireless earbud as defined in claim **20**, wherein the circuitry for wireless radio communication is compliant with one or more of Bluetooth, AirPlay, PlayFi, Miracast, WiDi, DLNA or Wi-Fi Direct.

22. A wireless audio streaming host device for use with a first wireless earbud and a second wireless earbud, the wireless audio streaming host device having a controller configured for:

receiving, by wireless communication, a message from the first earbud, the message indicating a current battery charge status for the first earbud;

receiving, by wireless communication, a message from the second earbud, the message indicating a current battery charge status for the second earbud;

determining which one of the first and second earbuds has a current master device role and a current slave device role, respectively;

assessing, based on the determined battery charge statuses for the first and second earbuds and on the determined current roles as master device and slave device, whether a switch in roles is appropriate for the master device and slave device; and, if a switch in roles is found appropriate:

causing, by wireless communication, the one among the first and second earbuds that currently has the master device role, to assume a slave device role; and

causing, by wireless communication, the other one among the first and second earbuds to assume a master device role.

* * * * *