A New Approach for Concurrent Dual-Band IF Digital PreDistortion: System Design and Analysis

A. Cidronali, I. Magrini, R. Fagotti, G. Manes

Department of Electronics and Telecommunications, University of Florence, V. S. Marta, 3, I-50139, Italy {first.last@unifi.it}

***Abstract* — In this paper we propose a Dual Band Digital Predistorter (DB-DPD), suitable for concurrent dual-band power amplifiers. A sub-sampling receiver is at the basis of the feedback path, while the vectorial gain adjuster is achieved at the proper digital intermediate frequency. The proposed method adopts a conventional memory polynomial DPD for linearization. The approach is tested by system-level simulations and it was proven to be able to correct most of the nonlinearity, with only a modest performance loss with respect to single-band architectures.**

I. Introduction

The most of the available Digital PreDistortion (DPD) techniques deal with single-band operation, although recently an approach to deal with multi-carrier and potentially available for multiband systems was presented in [1]. In this technique the modulation bandwidth in several bands and then a DP algorithm is applied selectively to the inband and interband third-order intermodulation distortion (IMD3). As the approach relies on third order Volterra model, the accuracy of the DP depends upon the identification procedure and the frequency band spacing.

In this paper we propose a novel method of Dual Band DPD (DB-DPD), capable of a simultaneous predistortion of a concurrent dual-band power amplifier at both frequency bands. The proposed method uses a single band memory polynomial DP for linearization, operating at a proper IF. As feedback path the system adopts a subsampling receiver, which allows extreme flexibility and coherent dual-band down-conversion. With the selection of an appropriate sample rate, the RF channels are translated side-by-side at a low IF with no spectral overlap. At this section of the system a low-pass ADC digitizes the entire baseband range, and after DSP channelization of the signals an indirect learning algorithm is adopted to train the DPD. The memory polynomial DB-DPD system was simulated with Matlab-Simulink®, and performance was compared with those achieved from the same system operating in single band operation.

The paper is organized as follows: in Section II is recalled a brief review of the main PA topologies target of the linearization procedure herein analysed. In Section III is described the sub-sampling receiver design and the technique for the sampling frequency calculation. Section IV reports the operating principle of the DB-DP system, while in Section V simulation results are showed, highlighting performance differences over single band DPD systems.

II. Dual-band power amplifier architectures

The main objective of the present paper is the evaluation of a new concept of DB-DPD consistent with two possible architectures of dual-band PA both suitable for their involvement in the concurrent dual-band systems. The first is based on two dedicated PAs combined by a diplexer while the second is specifically designed to be operated in dual-band state. In the next paragraphs a brief discussion of this PA topologies is given.

A) Combined dedicated PAs

One out of the two dual-band architectures considered in this work is based on the schematic representation reported in Fig. 1. It represents the most straightforward solution which makes use of two dedicated PAs combined by a diplexer. While for the PA units the designer can access to the most mature and advances design methodologies and technologies, the passive diplexer still represents a very critical part of the entire PA structure. Indeed, this component must guarantee an almost lossless behavior in the transmission paths and an as much as possible isolation. In particular the former feature is required to preserve the combined efficiency of the entire structure, while the latter is a required feature to avoid the cross-modulation between the two dedicated PAs. The constraints on the diplexer become more critical in the case of closer operative spectrum bands. During the two dedicated PAs design, the eventual combination with the diplexer doesn't require specific additional PA design consideration, only an accurate evaluation of the out-of band termination which might degrade the output power and efficiency of the two units.

B) Dual-band single PA

The PA architecture under investigation in this paper is represented by the dual-band single PA, i.e. a circuit designed around a single active device and able to simultaneously operate at two different frequency bands. The schematic of the concurrent PA is reported in Fig. 2, where the dual-tuned matching networks are synthesized by either passive and\or distributed elements properly dimensioned, without external tuning controls. The basic principle discussed in [5]-[6], for the development of dual-tuned matching network can be effectively considered for the concurrent dual-band PA. In this configuration the two signal sources are combined prior to be

978-1-4244-2646-1/08/$25.00 ©2008 IEEE

Exhibit 1006
Nokia of America Corporation, et al. v. Smart RF Inc.
Page 000001

applied to the PA input. The design method of concurrent dual-band PA based on multi-tuned networks composed of lumped elements is discussed in detail in [7].

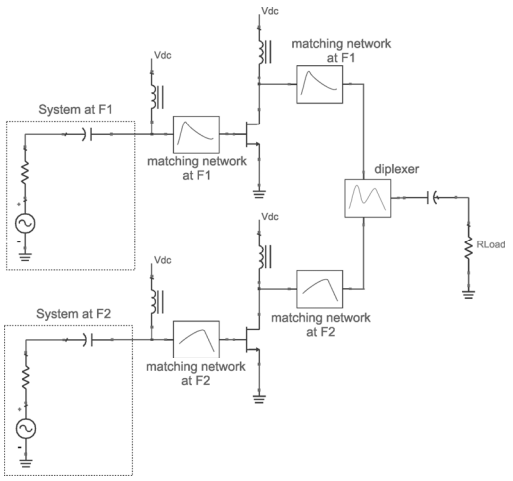

Fig. 1. Schematic of the concurrent dual-band PA implemented by two combined dedicated PAs.

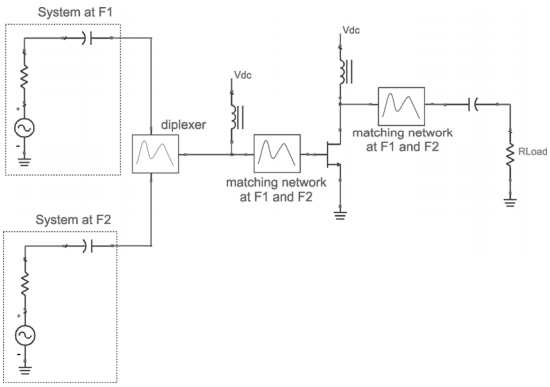

Fig. 2. Concurrent dual-band PA schematic, implemented by a dual-band PA.

III. Subsampling Receiver

The subsampling adopted in the DB-DPD feedback recalls somehow the receivers adopted in the multiband radios and is based on the bandpass sampling theorem. This principle can be adapted to down-convert two (or more) band-limited signals s_1 and s_2, located at different centre frequencies f_{c1} and f_{c2}, with bandwidths B_1 and B_2. Selecting the proper sampling frequency there will be aliases of the two signals located side-by-side in the first Nyquist zone with no overlap, as shown in Fig. 3. The sampling frequency must respect the condition:

$$f_s \geq 2(B_1 + B_2)$$

that is, the Nyquist zone must be wider than the sum of the two bands.

Form the Fig. 3 is evident that the two band-pass signals have to be down-converted at IF rather than both at base-band to make them suitable for the DP training. In the full paper a detailed discussion about the constraints and the proper selection of the intermediate frequency for the down conversions is given.

IV. Dual Band Digital PreDistortion

In the full paper we will discuss about the proposed DB-DPD system which is an extension of a single band DPD (SB-DPD) system. In this case, the predistortion is usually realized in the digital baseband, while a baseband predistortion with a unique DP is not possible in dual band concurrent systems. In DB-DP, baseband digital signals $x_1(n)$ and $x_2(n)$ are shifted to f_{IF1} and f_{IF2} then summed thus creating $\tilde{x}'(n)$, which is about a proper IF and passed through the gain adjuster; the output of this process is the numeric signal $\tilde{z}'(n)$. The next step is operated by a numeric diplexer which separates again the two frequency bands. A pair of numeric frequency down-conversions translates to baseband the two signal which are then converted in the analogue domain. This latter numeric process is required when the ADC clock frequency is an issue. The analogue PA input $\tilde{z}'(t)$ is obtained by frequency shifting to the RF frequencies f_{c1} and f_{c2}, and combining them. The PA output $\tilde{y}'(t)$, is spilled and a portion of it is used to create the feedback signals. The feedback path proposed in this paper consists of the coherent dual-band subsampling receiver discussed in the previous section. The two bands composing $\tilde{y}'(t)$ are aliased side-by-side in the baseband, then digitized by a single ADC.

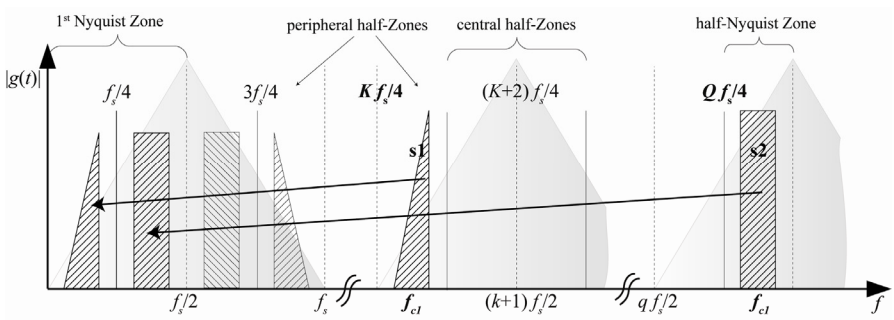

Fig. 3. Dual band subsampling

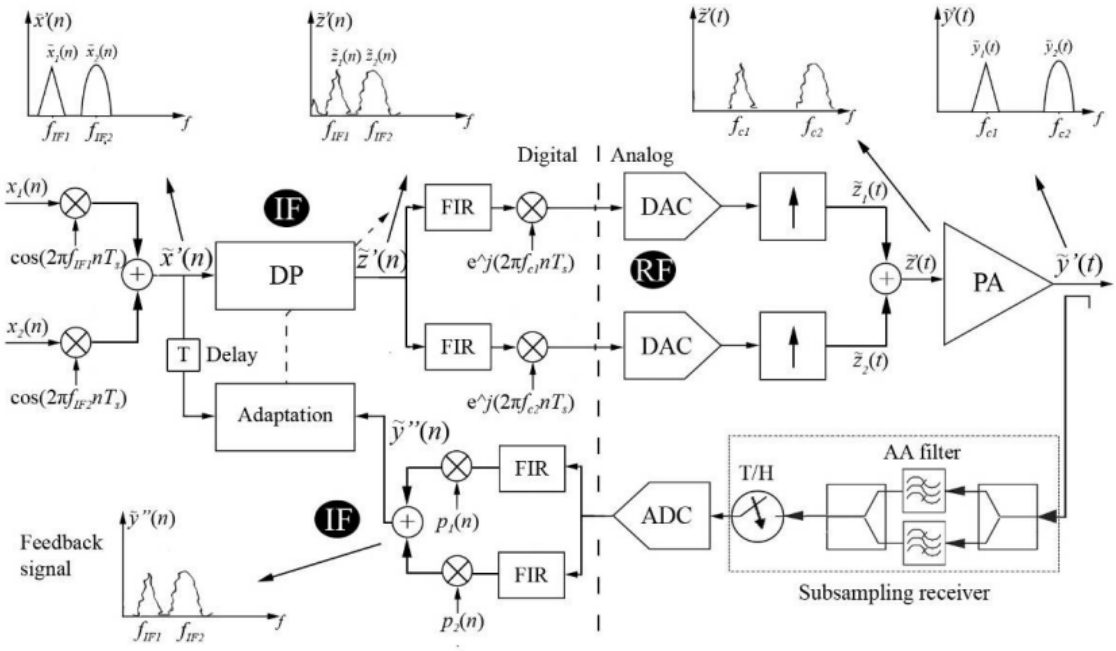

Fig. 4.DB-DP system with IF predistortion and subsampling feedback

In the digital domain, the bands are separated and shifted to IF, composing the signal $\tilde{y}''(n)$ that is compared to $\tilde{x}'(n)$ by the direct learning training algorithm. The block diagram of the whole system is shown in Fig. 4.

V. Simulation Results

The DB-DP was simulated by Matlab/Simulink®. We considered two 16 QAM signals, with amplitudes $P = -10\text{dBm}$ and centre frequencies $f_{c1} = 2.1$ GHz and $f_{c2} = 3.5$ GHz; the sampling frequency was set to $f_s = 146.5$ MHz. The PA was modeled with the Wiener-Hammerstein model. LTI blocks preceeding and following the memoryless NL were set to have the following transfer functions:

$$H(z) = \frac{1 + 0.5z^{-2}}{1 - 0.4z^{-1}} \ , \ G(z) = \frac{1 - 0.3z^{-2}}{1 - 0.4z^{-1}}$$

It was chosen a tanh-shaped AM/AM NL, that has G=20dB, IP3=38dB and whose AM/PM is linear, with 5°/dB slope.

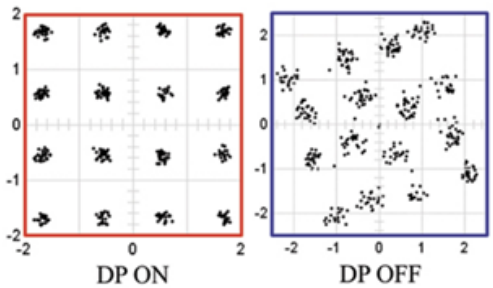

Fig. 5. Constellations comparison for lower channel, between transmitted signal and input signal, with DB-DP OFF and DB-DP ON.

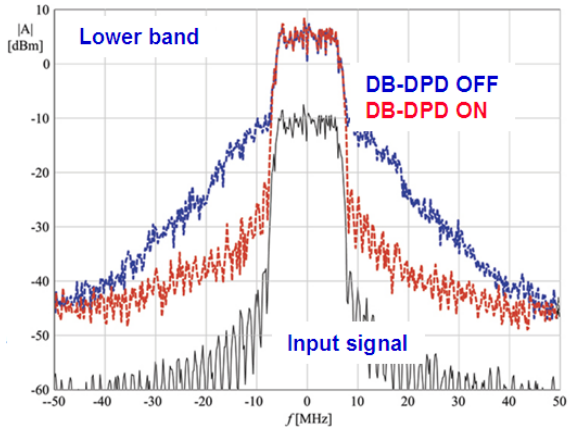

Fig. 6. Spectra comparison for lower channel, between transmitted signal and input signal, with DB-DP OFF and DB-DP ON.

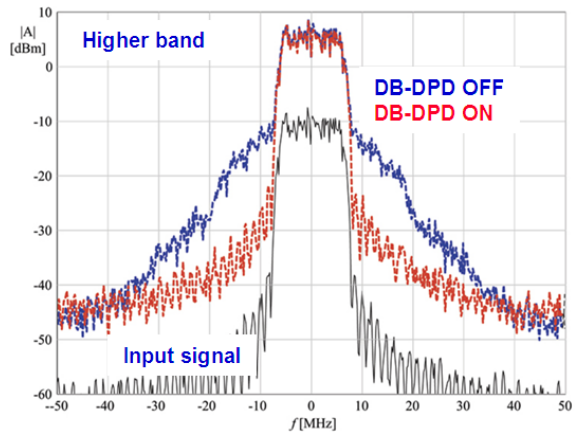

Fig. 7. Spectra comparison for higher channel, between transmitted signal and input signal, with DB-DP OFF and DB-DP ON.

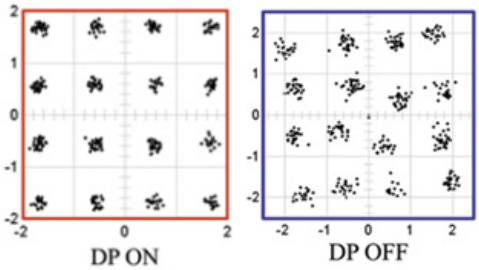

Fig. 8. Constellations comparison for higher channel, between transmitted signal and input signal, with DB-DP OFF and DB-DP ON.

For the implementation of the DB-DPD we used a memory polynomial DP, with a memory length of 4 taps, a polynomial order K=9 and a LUT predistorter with a size of 512. Polynomial coefficients were estimated on a basis of 8192 samples. Simulation results for both channels are shown in **Errore. L'origine riferimento non è stata trovata.** through **Errore. L'origine riferimento non è stata trovata.**, where an ACPR and EVM significant reduction is observed. The method proved to be able to correct most NLs, but it is not as good as a SB-DP. While in that case we obtained a Normalized Mean Square Error (NMSE) of approximately 3e-4, in the DB-DP we obtained an NMSE of approximately 1e-3.

VI. Conclusion

The proposed DB-DPD system architecture exploits a memory polynomial predistorter and a subsampling receiver as a feedback path. The DB-DP implements a memory polynomial predistorter and a direct learning training method similar to those involved in single band DP. It operates at a proper digital IF and it is able to correct most NLs, even those due to memory effect, both in single and dual band operation. The introduced technique can be effectively used in conjunction with concurrent dual-band PAs. Comparison with conventional DPD shows that the performance decreases slightly when a concurrent dual band signal is predistorted.

References

[1] P. Roblin, S. K. Myoung, D. Chaillot, Y. Gi Kim, A. Fathimulla, J. Strahler, S. Bibyk "Frequency-Selective Predistortion Linearization of RF Power Amplifiers" IEEE Trans on Microwave Theory and Tech., Vol. 56, Jan. 2008, pp 65-76

[2] L. Ding, GT Zhou, DR Morgan, Z. Ma, JS Kenney, J. Kim, and CR Giardina. Memory polynomial predistorter based on the indirect learning architecture. *Global Telecommunications Conference, 2002. GLOBECOM'02. IEEE, 1, 2002.*

[3] R. Meyer, R. Eschenback, and W. Edgerley, Jr., "A wideband feedforward amplifier," *IEEE J. Solid-State Circuits*, vol. SCC-9, no. 6, pp. 422–448, Jun. 1974.

[4] Y. Kunisawa "Study on a Multiple Signal Receiver Using Undersampling Scheme" Proc. of 2005 Software Defined Radio Technical Conference, and Product Exposition Nov. 14-18, 2005

[5] D. Bespalko, N. Messaoudi, S. Boumaiza, 'Concurrent dual-band GaN Power Amplifier with compact micro-strip matching network' 2008 IEEE Topical Symposium on Power Amplifier for Wireless Communications, Jan. 21-22, 2008, Orlando, Florida

[6] P. Colantonio, F. Giannini, R. Giofre, L. Piazzon, "Simultaneous dual-band high efficiency harmonic tuned power amplifier in GaN technology", European Microwave Integrated Circuit Conference, 8-10 Oct. 2007 pp.127 – 130

[7] A. Cidronali, N. Giovannelli, I. Magrini G. Manes "Dual-band Compact Concurrent Dual-Band Power Amplifier for 1.98 GHz WCDMA and 3.42 GHz OFDM Wireless Systems: Design and Characterization", 38th European Microwave Conference, Amsterdam Oct. 27th, 2008