IN THE UNITED STATES PATENT AND TRADEMARK OFFICE

BEFORE THE PATENT TRIAL AND APPEAL BOARD

T-MOBILE US, INC., AT&T MOBILITY LLC, CELLCO PARTNERSHIP
D/B/A VERIZON WIRELESS, ERICSSON INC. AND
NOKIA OF AMERICA CORPORATION,
Petitioners,

v.

SMART RF INC.,
Patent Owner.

U.S. Patent No. 10,958,296
Issue Date: March 23, 2021

DIGITAL MULTI-BAND PREDISTORTION LINEARIZER
WITH NON-LINEAR SUBSAMPLING ALGORITHM IN THE FEEDBACK
LOOP

Inter Partes Review No.: IPR2025-00691

PETITION FOR *INTER PARTES* REVIEW OF U.S. PATENT 10,958,296
UNDER 35 U.S.C. §§311-319 and 37 C.F.R. §§42.1-.80, 42.100-.107

***Mail Stop* "*PATENT BOARD*"**
Patent Trial and Appeal Board
U.S. Patent and Trademark Office
P.O. Box 1450

TABLE OF CONTENTS

I. INTRODUCTION 1

II. OVERVIEW 1

III. GROUNDS FOR STANDING UNDER 37 C.F.R. § 42.104(a) 5

IV. RELIEF REQUESTED (37 C.F.R. §42.22(a)) 6

V. REASONS FOR THE RELIEF REQUESTED 6

A. State of the Art 6

1. Digital Predistortion ("DPD") 6

2. Direct and Indirect Predistortion 9

3. Nyquist-Rate Sampling and Subsampling 10

B. Summary of the '296 Patent 14

C. Summary of the Prosecution History 17

D. Claim Construction 18

E. Priority Date 21

F. Person of Ordinary Skill in the Art 21

VI. IDENTIFICATION OF CHALLENGES 21

A. Challenged Claims 21

B. Statutory Grounds for Challenges 21

VII. IDENTIFICATION OF HOW THE CLAIMS ARE UNPATENTABLE 22

A. Ground 1: Claims 1-7 and 10 are Obvious Under 35 U.S.C. § 103(a) over Peroulas 22

1. Peroulas 22

2. Detailed Application to the Challenged Claims 24

B. Ground 2: Claims 8 and 9 are Obvious Under 35 U.S.C. § 103(a) over Peroulas in View of Cidronali 49

1. Cidronali.....49

2. Motivation to Combine the Teachings of Peroulas with the Teachings of Cidronali.....50

3. Detailed Application of Peroulas in View of Cidronali.....54

C. Ground 3: Claim 1-7 and 10 are Obvious Under 35 U.S.C. § 103(a) over Posti 57

1. Posti.....57

2. Detailed Application to the Challenged Claims 59

D. Ground 4: Claims 8 and 9 are Obvious Under 35 U.S.C. § 103(a) over Posti in View of Cidronali 84

1. Motivation to Combine the Teachings of Posti with the Teachings of Cidronali.....84

2. Detailed Application to the Challenged Claims 87

VIII. THE BOARD SHOULD NOT EXERCISE ITS DISCRETION TO DENY INSTITUTION 89

A. The Board Should Not Deny Review Under 35 U.S.C. § 325(d).....89

B. The Board Should Not Deny Review Under 35 U.S.C. § 314(a) 90

IX. MANDATORY NOTICES – 37 C.F.R. § 42.8.....92

A. Real Parties-In-Interest Under 37 C.F.R. § 42.8(b)(1).....92

B. Related Matters Under 37 C.F.R. § 42.8(b)(2) 93

C. Lead and Back-Up Counsel Under 37 C.F.R. § 42.8(b)(3) 94

D. Service Information Under 37 C.F.R. § 42.8(b)(4).....94

E. PAYMENT OF FEES – 37 C.F.R. § 42.103 94

X. CONCLUSION.....95

XI. CERTIFICATE OF WORD COUNT i

TABLE OF AUTHORITIES

Federal Cases

Game & Tech. Co. v. Activision Blizzard Inc., 926 F.3d 1370 (Fed. Cir. 2019) 30

KSR Int'l Co. v. Teleflex Inc., 550 U.S. 398 (2007) ..... *Passim*

Skedco, Inc. v. Strategic Operations, Inc., 287 F. Supp. 3d. 1100 (D. Or. 2018) 51

PTAB Cases

Apple Inc. v. Fintiv, Inc., Case IPR2020-00019, Paper 11 (March 20, 2020)...89, 91

Dish Network v. Broadband iTV, IPR2020-01280, Paper 17 (Feb. 4, 2021) 90

HP Inc. v. Slingshot Printing LLC, IPR2020-01084, Paper 13 (Jan. 14, 2021).....90

Sotera Wireless, Inc. v. Masimo Corp., IPR2020-01019, Paper 12 (Dec. 1, 2020) 90

Federal Statutes

35 U.S.C. § 102 .....21, 22

35 U.S.C. §§311 *et seq*.....1

Regulations

37 C.F.R. §§42.1 *et seq*.....1

37 C.F.R. §42.106. 5

37 C.F.R. §42.108 6

PETITIONERS' EXHIBIT LIST

Ex. No.	Brief Description
1001	U.S. Patent No. 10,958,296 ("the '296 Patent")
1002	File History for U.S. Patent No. 10,958,296
1003	Expert Declaration of James Proctor under 37 C.F.R. § 1.68.
1004	*Curriculum Vitae* of James Proctor
1005	World Intellectual Property Organization International Publication No. WO 2012/129768 to James Peroulas, Filing Date of March 28, 2011 and Publication Date October 4, 2012 ("Peroulas").
1006	Alessandro. Cidronali, "A New Approach for Concurrent Dual-Band IF Digital PreDistortion: System Design and Analysis," 2008 Workshop on Integrated Nonlinear Microwave and Millimetre-Wave Circuits (January 2009), ("Cidronali")
1007	Declaration of Julie Ann Munford
1008	Dennis Morgan, "A Generalized Memory Polynomial Model for Digital Predistortion of RF Power Amplifiers," IEEE Transactions on Signal Processing, vol. 54, no. 10, (October 2006), ("Morgan")
1009	U.S. Patent No. 6,999,523 ("Posti")
1010	Nazim Ceylan, "Linearization of Power Amplifiers by Means of Digital Predistortion" (2005) ("Ceylan")
1011	Excerpts from Zhurbenko *et al*., Advanced Microwave Circuits and Systems (2010), ("Zhurbenko")
1012	Henna Paaso, "Comparison of Direct Learning and Indirect Learning Predistortion Architectures," 2008 IEEE International Symposium on Wireless Communication Systems (2008), ("Paaso")
1013	Dayong Zhou, "Novel Adaptive Nonlinear Predistorters Based on the Direct Learning Algorithm," *IEEE Transactions on Signal Processing*, vol. 55, no. 1, (Jan. 2007), ("Zhou")
1014	Youngcheol Park, "Adaptive Predistortion Linearization of RF Power Amplifiers Using Lookup Tables Generated from Subsampled Data," 2002 IEEE Radio and Wireless Conference (2002), ("Park")

Ex. No.	Brief Description
1015	Excerpts from the File History for U.S. Patent No. 9,641,204
1016	Excerpts from Qizheng Gu, RF System Design of Transceivers for Wireless Communications (Springer 2005), ("Gu")
1017	Docket Control Order, *Smart RF Inc. v. AT&T Mobility LLC et al.*, Case No. 2:24-cv-00195-JRG, Dkt. No. 41 (E.D. Tex. June 21, 2024)
1018	Federal Court Management Statistics - Profiles, June 30, 2024, *available at* https://www.uscourts.gov/sites/default/files/2024-11/fcms_na_distprofile0630_2024.pdf
1019	U.S. Patent No. 7,110,732 ("Mostafa")
1020	Rim Barrak, "Optimized Multistandard RF Subsampling Receiver Architecture," IEEE Transactions on Wireless Communications (2009), ("Barrak")
1021	Sungho Choi, "Design of Digital Predistorters for Multi-Band Signals," Proceedings of the Second APSIPA Annual Summit and Conference (2010), ("Choi")
1022	Letter to Smart RF re: *Sotera* Stipulation
1023	Excerpts from IEEE Std 100-2000, The Authoritative Dictionary of IEEE Standards Terms, Seventh Edition (2000)
1024	R. Venkataramani and Y. Bresler, "Perfect reconstruction formulas and bounds on aliasing error in sub-Nyquist nonuniform sampling of multiband signals," in IEEE Transactions on Information Theory, vol. 46, no. 6, pp. 2173-2183, (Sept. 2000)
1025	R. Venkataramani, "Sub -Nyquist multicoset and MIMO sampling: Perfect reconstruction, performance analysis, and necessary density conditions," University of Illinois at Urbana-Champaign ProQuest Dissertations & Theses (2001).
1026	Allen Katz, "Linearization: Reducing Distortion in Power Amplifiers," IEEE Microwave Magazine (2001), ("Katz")
1027	Lei Ding, Raviv Raich, *et al.*, "A Hammerstein Predistortion Linearization Design Based on the Indirect Learning Architecture," 2002 IEEE International Conference on Acoustics, Speech, and Signal Processing (2002), ("Raich")

Ex. No.	Brief Description
1028	Lei Ding, "Digital Predistortion of Power Amplifiers for Wireless Applications", A Thesis Presented to the Academic Faculty, School of Electrical and Computer Engineering, Georgia Institute of Technology (2004), ("Ding")
1029	Excerpts from Ronald Crochiere, Multirate Digital Signal Processing (Prentice Hall 1983), ("Crochiere")
1030	Excerpts from Leon Couch, Digital and Analog Communication Systems (Macmillan Publishing 1987), ("Couch")
1031	Excerpts from John Proakis, Communication Systems Engineering (Prentice Hall 2002), ("Proakis")

LISTING OF CHALLENGED CLAIMS

Reference	Claim Limitation
Claim 1	
1[pre]	A linearized transmitter comprising
1[a]	a digital signal predistorter block including digital baseband signal predistorters effecting predistortion of concurrent input signals to output concurrent predistorted signals;
1[b]	a power amplifier block connected to amplify the predistorted signals; and
1[c]	an analyzing and modelling stage receiving first feedback signals taken from an output of the power amplifier, and second feedback signals taken concurrently from the concurrent predistorted signals and using the first feedback and the second feedback signals in the analyzing and modelling stage to model a nonlinearity in the power amplifier, wherein the digital baseband signal predistorters are updated by the analyzing and modelling stage.
Claim 2	
2[pre]	The linearized transmitter of claim 1, wherein said concurrent digital multi-band predistortion block further comprises:
2[a]	a plurality of the digital baseband signal predistorters each corresponding to a respective channel;
2[b]	a signal observation feedback loop for generating said first feedback signals.
Claim 3	
3[pre]	The linearized transmitter of claim 2, wherein said plurality of digital baseband signal predistorters further comprises:
3[a]	a plurality of inputs, each input corresponding to a single frequency channel; and
3[b]	a plurality of outputs, each output corresponding to a single frequency channel, and each output connected to an input of a concurrent multi-band transmitter.
Claim 4	
4[pre]	The linearized transmitter of claim 2, wherein said

	analyzing and modeling stage further comprises:
4[a]	a plurality of outputs connected to update the parameters of said digital baseband signal predistorters; and
4[b]	a plurality of inputs connected to both: (a) outputs of said signal observation feedback loop comprising said first feedback signals, and (b) to outputs of said digital signal predistorter block.
Claim 5	
5[pre]	The linearized transmitter of claim 2, wherein said analyzing and modeling stage is further adapted to:
5[a]	perform time alignment of complex baseband signals from sampling said first feedback signals; and
5[b]	perform reconstruction of the complex baseband signals from said sampling.
Claim 6	
6[pre]	The linearized transmitter of claim 2,
6[a]	said first feedback signals corresponding to a baseband equivalent for all frequency channels and wherein the baseband equivalent signals being extracted from down-converted samples of RF signals output from said power amplifier block.
Claim 7	
7[pre]	The linearized transmitter of claim 2, wherein said signal observation feedback loop further comprises a plurality of channels, each channel comprising:
7[a]	an RF filter; a signal down conversion block; and an analog-to-digital converter (ADC).
Claim 8	
8[pre]	The linearized transmitter of claim 2, wherein said signal observation feedback loop further comprises:
8[a]	a single subsampling-based receiver to down-convert samples output from said power amplifier block.
Claim 9	
9[pre]	The linearized transmitter of claim 8, wherein said single subsampling-based receiver further comprises:
9[a]	an RF filter; a track and hold (T &H) block; and an analog-to-digital converter (ADC)

Claim 10	
10[pre]	A method for linearizing a transmitter, said method comprising:
10[a]	effecting predistortion of concurrent input signals to output concurrent predistorted signals using a digital signal predistorter block including digital baseband signal 5 predistorters;
10[b]	amplifying the predistorted signals using a power amplifier block;
10[c]	receiving in an analyzing and modelling stage first feedback signals taken from an output of the power amplifier, and second feedback signals taken concurrently from the concurrent predistorted signals; and
10[d]	using the first feedback and the second feedback signals in the analyzing and modeling stage to model a nonlinearity in the power amplifier, wherein the digital baseband signal predistorters are updated by the analyzing and modelling stage.

I. INTRODUCTION

Pursuant to 35 U.S.C. §§311 *et seq*. and 37 C.F.R. §§42.1 *et seq*., Nokia of America Corporation, Ericsson Inc., AT&T Mobility LLC, Cellco Partnership d/b/a/ Verizon Wireless, and T-Mobile USA, Inc. (collectively, "Petitioners") hereby petition for an *inter partes* review ("IPR") of Claims 1-10 (the "Challenged Claims") of U.S. Patent No. 10,958,296 (the "'296 Patent"; EX-1001). Petitioners respectfully request that the Board institute IPR because this Petition demonstrates that there is a reasonable likelihood that Petitioners will prevail with respect to at least one Challenged Claim.

II. OVERVIEW

The Challenged Claims are unpatentable as obvious. When a power amplifier ("PA"), like those used in radio telecommunications, operates in its non-linear region to improve overall efficiency, the output from the PA is distorted relative to its input. Like many others prior to the '296 Patent, the inventors proposed to mitigate PA nonlinearities by predistorting the signal input to the PA. As shown in the '296 Patent's Figure 1, the Patent employs a well-known "indirect learning" approach to predistortion where feedback signals are taken both after predistortion (blue) and after the PA (red) so that nonlinearities introduced by the PA (green) can be analyzed and modeled (orange) and used to update the system's predistorters (purple):

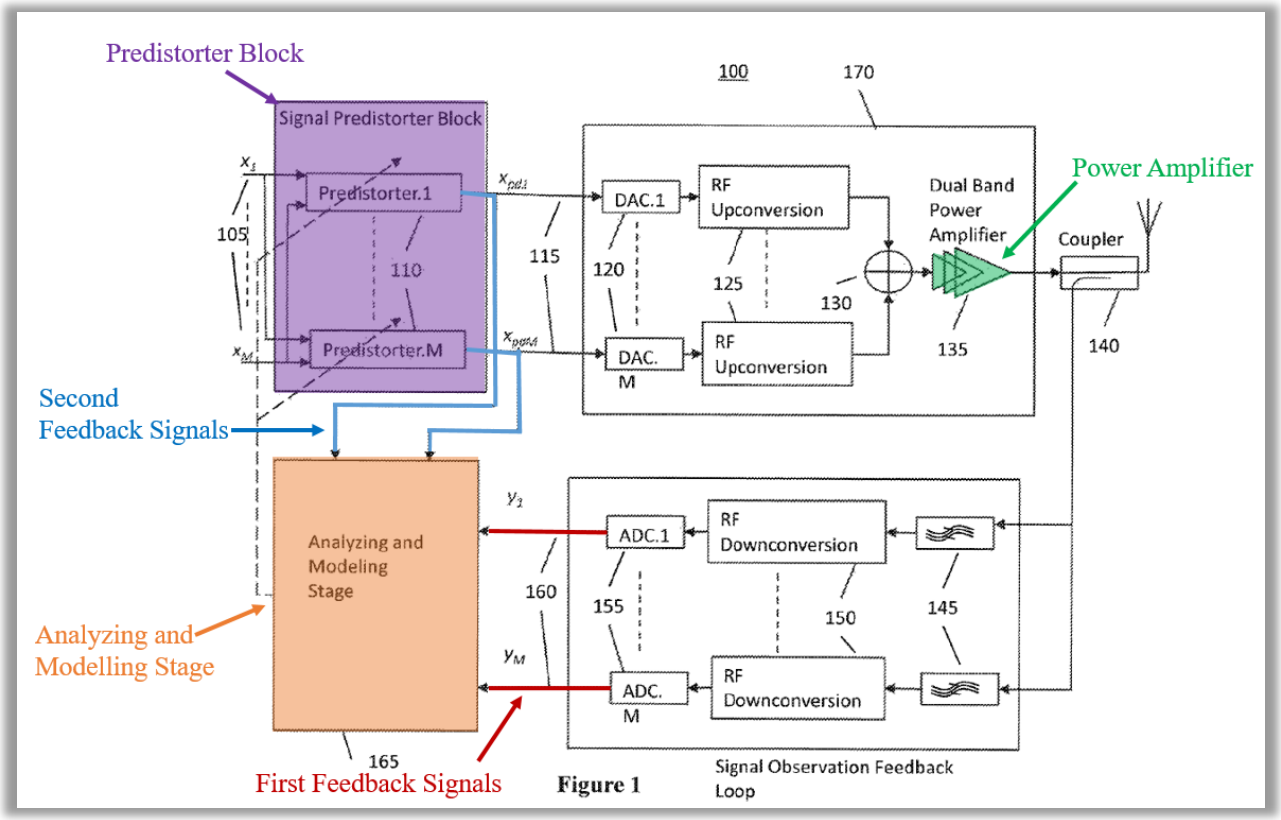

EX-1001, Fig. 1 (Annotated); EX-1003, ¶¶31-32.

More specifically, the '296 Patent's signal predistorter block predistorts input signals x_1 to x_M based on an estimate from the analyzing and modeling stage through comparison of first feedback signals (red) and second feedback signals (blue). The first feedback signals, y_1 to y_M, are taken from the output of the PA, and the second feedback signals, x_{pd1} to x_{pdM}, are taken from the output of the signal predistorter block (purple). The analyzing and modeling stage (orange) then updates the predistorter block (purple). Patent Owner argued during prosecution that this basic architecture where concurrent feedback signals are used in an indirect learning approach was novel, but this is incorrect. EX-1003, ¶33.

Rather, it was commonplace to compensate for distortion by using concurrent feedback signals taken both after predistortion and after the PA to model the PA's nonlinearity and update the system's predistorters. For example, Peroulas (used in Grounds 1 and 2) discloses a near identical architecture for predistortion (shown with common elements annotated in a common color):

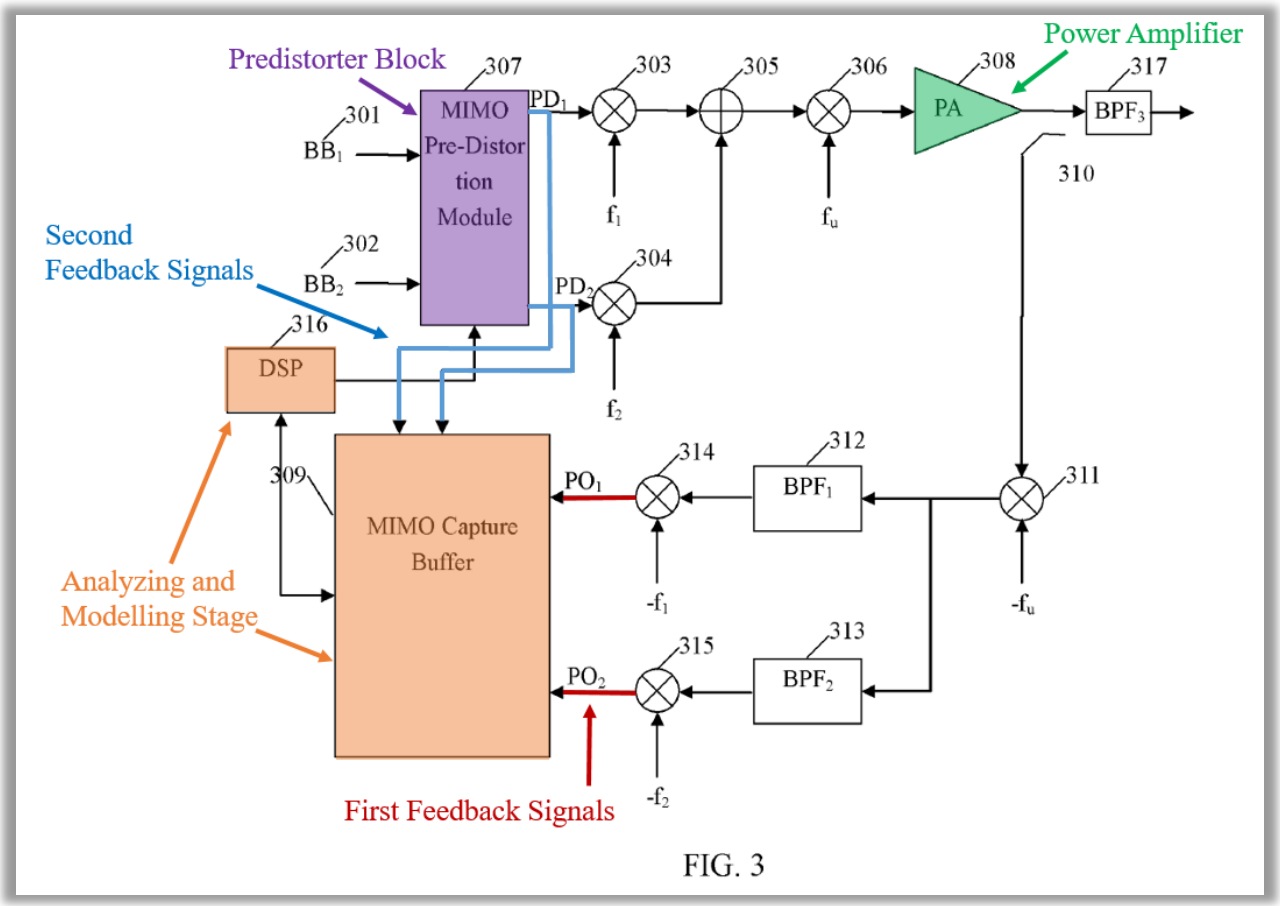

FIG. 3

EX-1005, Fig. 3 (Annotated); EX-1003, ¶34.

Peroulas' MIMO Pre-Distortion Module (purple) predistorts input signals BB_1 and BB_2 based on an estimate from the MIMO Capture Buffer and Digital Signal

Processor (DSP) (orange) through comparison of first feedback signals taken from the PA's output (red), and second feedback signals (blue) taken from the predistorter's output. And just like in the '296 Patent, Peroulas' analyzing and modeling stage (orange) then updates the system's predistorters. Peroulas thus discloses and renders obvious the '296 Patent's independent claims and all but two dependent claims, which are separately rendered obvious by Peroulas in view of Cidronali. EX-1003, ¶35.

Grounds 3 and 4 then present an additional basis of unpatentability in view of Posti. Posti discloses a multi-frequency carrier transmitter comprising a plurality of input signals, a plurality of digital modulators for predistortion (purple), and a PA (green) to amplify the signal. EX-1009, 2:43-60, 4:66-5:5, 5:13-15, 5:41-42. Posti uses indirect learning to estimate and linearize the distortion introduced by the PA, which includes adaptive predistorter 108 as the claimed "analyzing and modeling stage" (orange), which receives concurrent signals from both the output of the PA (red) and the output of the digital modulators (blue). EX 1009, 5:50-52, 6:23-31.

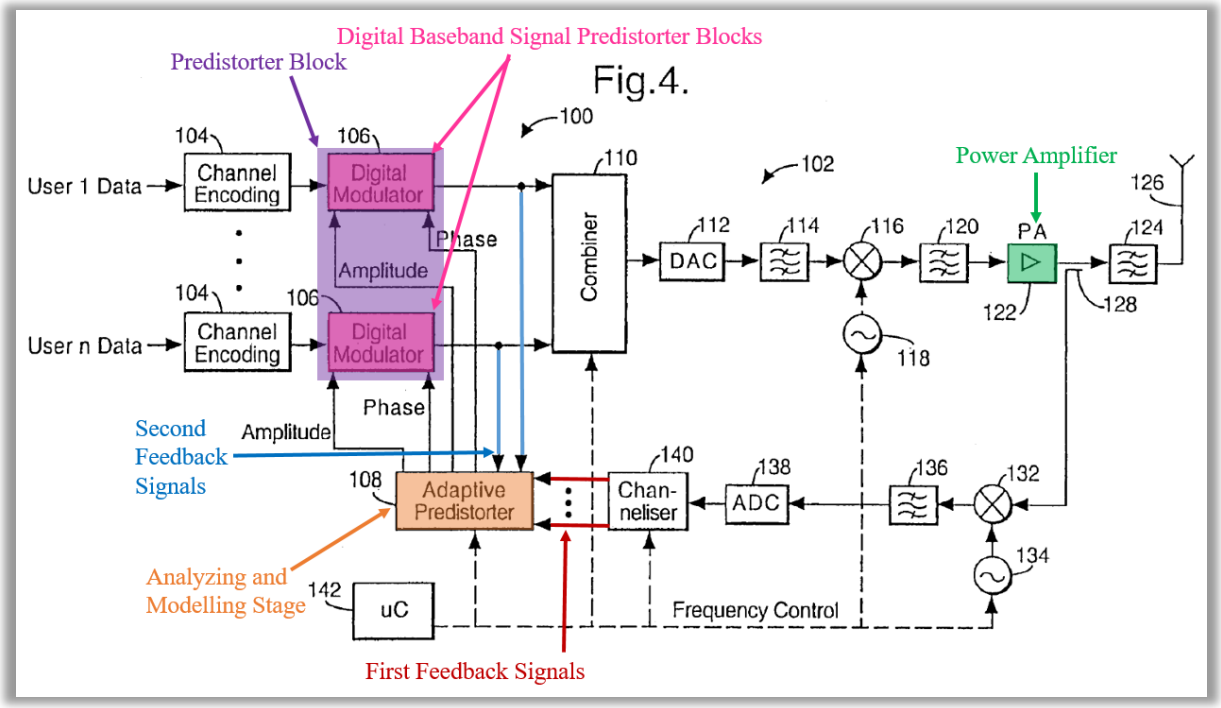

EX-1009, Fig 4 (Annotated). As in Grounds 1 and 2, Posti discloses and renders obvious the ’296 Patent’s independent claims and all but two dependent claims, which are rendered obvious by Posti in view of Cidronali. EX-1003, ¶36.

III. GROUNDS FOR STANDING UNDER 37 C.F.R. § 42.104(a)

Petitioners certify that the ’296 Patent is available for IPR and Petitioners are not barred or estopped from requesting this review. 37 C.F.R. §42.104(a). This Petition is filed less than one year after the date on which Petitioners (or a privy of Petitioners) were served with a complaint alleging infringement of the ’296 Patent. This Petition is filed under 37 C.F.R. §42.106(a).

IV. RELIEF REQUESTED (37 C.F.R. §42.22(a))

Petitioners respectfully request institution pursuant to 37 C.F.R. §42.108 and cancellation of the Challenged Claims.

V. REASONS FOR THE RELIEF REQUESTED

As explained herein and in the Declaration of James Proctor (EX-1003), the '296 Patent's predistortion system is obvious over the prior art.

A. State of the Art

The following describes the state of the art as of the '296 Patent's effective filing date, and provides additional factual support for the general knowledge, common understanding, and skill of a POSA at that time. EX-1003, ¶¶37-62.

1. Digital Predistortion ("DPD")

To mitigate unwanted distortions caused by amplification, radios will predistort their input signals before they are sent to the PA. The predistortion begins by "modeling" the PA's distortion effects. Using knowledge of the kind of distortion a given PA will introduce, a radio can predistort input signals such that the PA's later distortion is largely canceled. EX-1003, ¶¶37-45. Predistortion is also sometimes called "linearization." EX-1003, ¶42.

This figure illustrates a predistorter's operation in a simplified way:

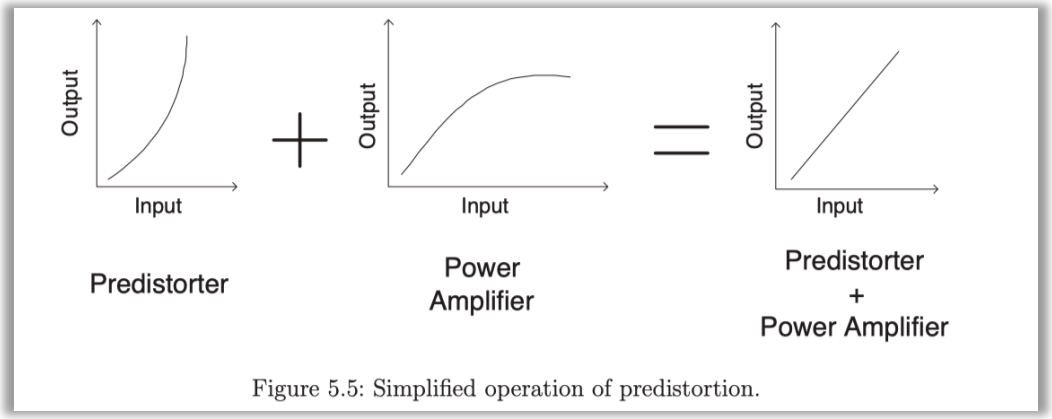

Figure 5.5: Simplified operation of predistortion.

EX-1010, Fig. 5.5; EX-1003, ¶43.

In a dual or multi-band system, predistortion can mitigate spectral distortion components and intermodulation products ("IMPs") between the input signals. IMPs arise due to the mixing of signals separated in the frequency domain, and they can appear so close in frequency to the fundamental input signals that they cannot be filtered out. EX-1011, 96, 139, 155. Multi-band predistortion is illustrated in the graphs below, which show that RF signals without predistortion (blue) have an increased power outside the input signal's bandwidth (which is undesirable) as compared to the RF signal with predistortion (red). EX-1003, ¶44.

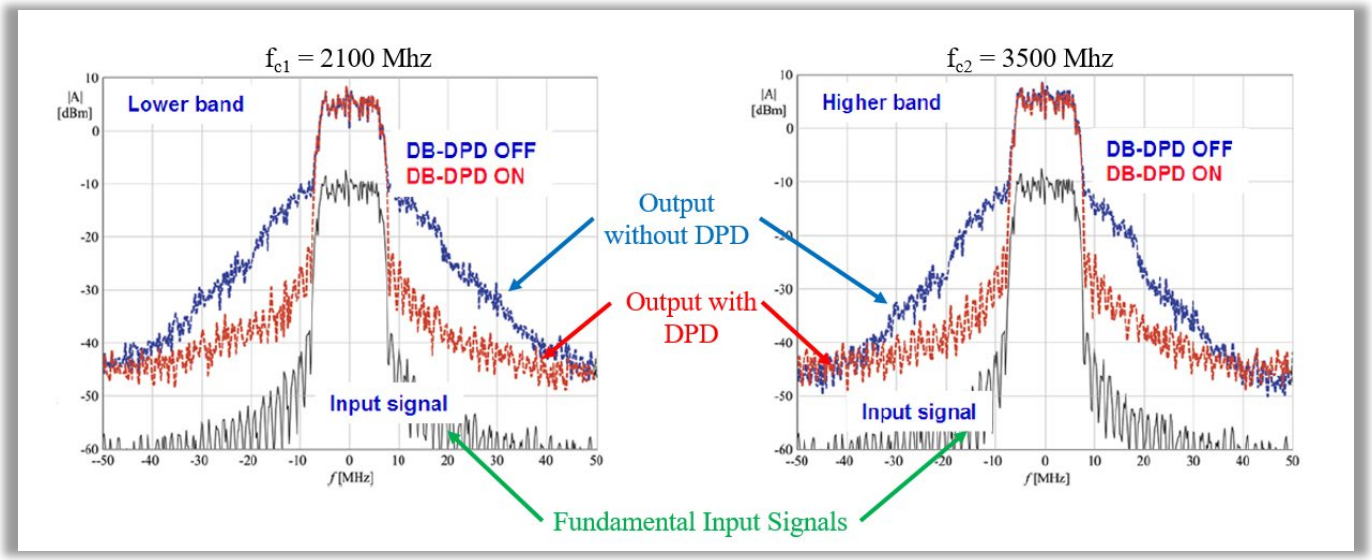

EX-1011, Fig. 30 (Annotated).

To limit the distortion caused by amplification, a POSA was aware of the many prior architectures and techniques for applying predistortion. For example, Choi (EX-1021) developed a system using one predistorter per band in a multi-band system such that "[e]ach PD [predistorter] removes the nonlinear cross-products and self-products to mitigate the spectral regrowth for the corresponding band." EX-1021, 133. Choi also explains that "[s]ince the cross-products between band 1 and band 2 signals appear in both ω_1 and ω_2, the predistorter also requires $x_1(n)$ and $x_2(n)$ [band 1 and band 2 input signals] for predistortion." *Id.*, 134. EX-1003, ¶45.

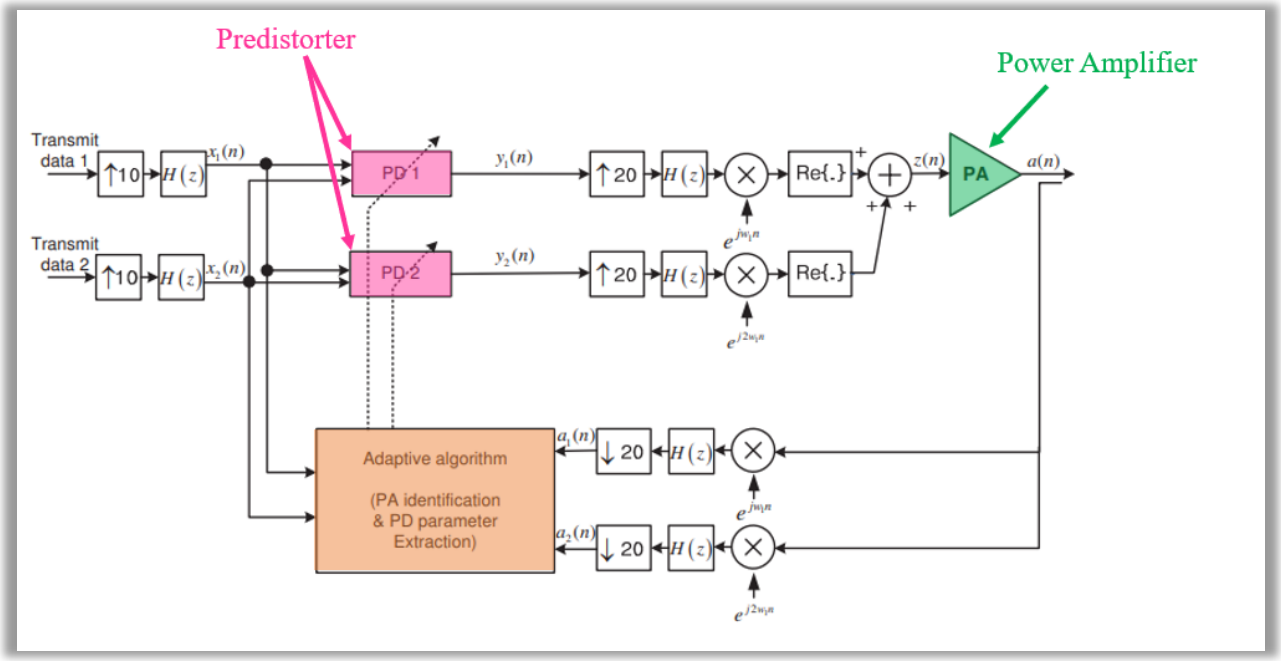

EX-1021, Fig. 4 (Annotated).

2. Direct and Indirect Predistortion

Adaptation or learning architectures for DPD were generally categorized as one of two primary types: direct and indirect learning. EX-1012, p 1; EX-1003, ¶¶46-48.

To develop a model of the nonlinearities introduced by the PA, a direct learning architecture uses feedback from the output of the PA and the *input* to the predistorter. In contrast, an indirect learning architecture uses the output of the PA and the *output* from the predistorter (prior to amplification). EX-1014, p 234; EX-1003, ¶47.

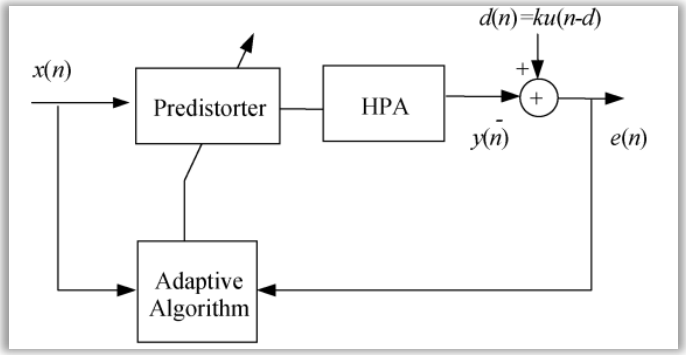

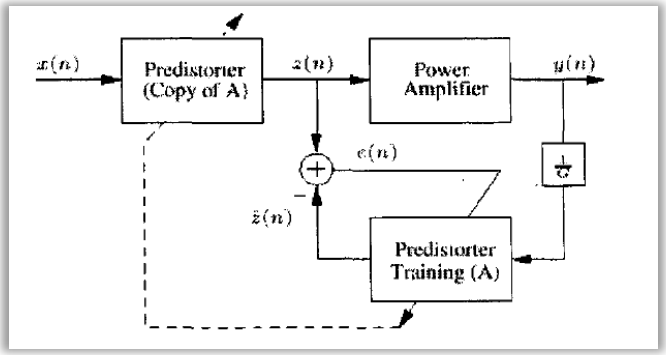

Direct DPD. EX-1013, Fig 2(b). **Indirect DPD. EX-1014, Fig. 2.**

Direct and indirect learning were widely discussed, and formed the two main feedback mechanisms a POSA would have considered when implementing DPD. *See e.g.*, EX-1005 (indirect); EX-1006 (direct); EX-1011, p. 97 (indirect), EX-1013, Fig. 2 (indirect and direct); EX-1012, Figs. 2-3 (indirect and direct, respectively); EX-1003, ¶48.

3. Nyquist-Rate Sampling and Subsampling

Analog to digital conversion is the process of sampling an analog waveform, and then transforming the analog information into a digital representation. EX-1016, 59. To represent an analog signal digitally, this process is repeated at a "sampling rate." "The classical sampling theorem states that a signal occupying a finite range (band-limited) in the frequency domain can be represented by its samples taken at a finite rate." EX-1025, 4. Additionally, a band-limited signal can be completely reconstructed if sampled at a rate, f_s, defined as $f_s \geq 2 * f_{max}$, where f_{max} is the highest signal frequency. EX-1016, 59; EX-1003, ¶¶49-54.

In other words, sampling should be done at or higher than twice the highest signal frequency (generally referred to as the Nyquist rate). Sampling at this rate "guarantees no overlaps in the sampled spectrum, and thus allows recovery of the original signal by a low-pass filtering operation." EX-1024, 2173 (Introduction). But at the same time, "[f]or efficient sampling, it is desirable to attain the lowest sampling rate possible …." EX-1025, 4. This is where subsampling comes in. *Id.*, 5; EX-1003, ¶51.

Subsampling allows for the entire signal to be reconstructed even though the signal was sampled below the Nyquist sampling rate. EX-1016, 188-189; EX-1003, ¶52.

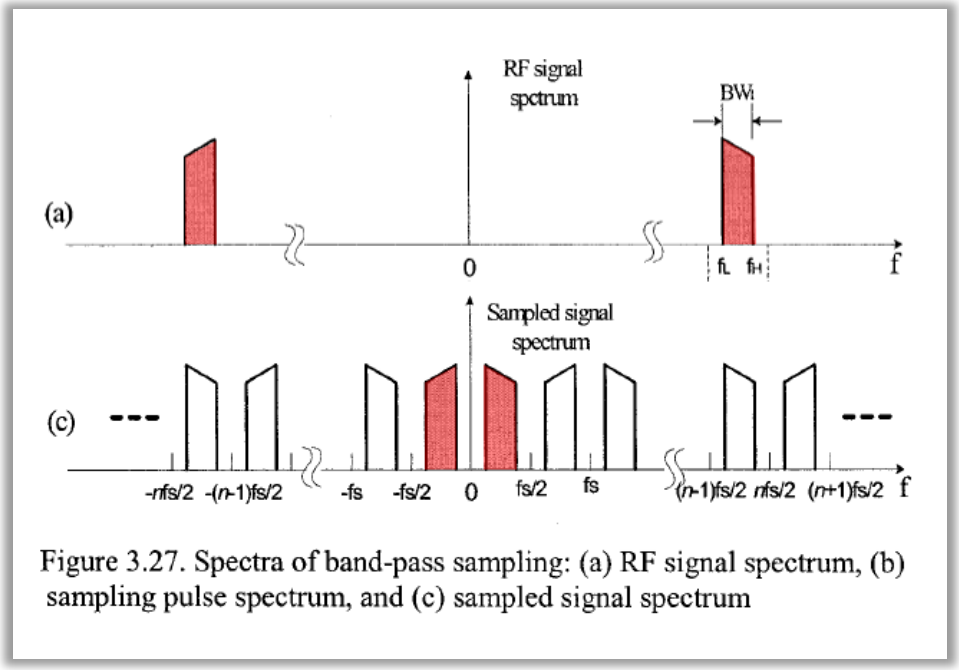

Figure 3.27. Spectra of band-pass sampling: (a) RF signal spectrum, (b) sampling pulse spectrum, and (c) sampled signal spectrum

EX-1016, Figure 3.27 (Annotated) (Partial). Subsampling, however, was known to create mirror replicas (aliases) of the signal at various frequencies between 0 and f_h, which are dealt with through proper sampling rate, f_s, selection. EX-1003, ¶52.

The widely known equations to determine an acceptable alias-free sample rate are defined below:

$$\frac{2f_H}{n} \leq f_s \leq \frac{2f_L}{n-1} \tag{1}$$

$$n_{max} = \left\lfloor \frac{f_H}{f_H - f_L} \right\rfloor \tag{2}$$

EX-1016, Equations (3.4.3) and (3.4.4); *see also* EX-1001, 4:48-50; EX-1016, 189; EX-1024, 2173 (Introduction); EX-1025, 1-3. By lowering the required sampling rate, subsampling also reduces the required processing rate, and expensive high-rate components can be replaced with cheaper, low-rate components. Subsampling also reduces the number of down-conversion units and filters. EX-1016, 189. EX-1003, ¶53.

Receivers for subsampling were also well-known. As early as 2002, Park disclosed a subsampling receiver for DPD within an indirect learning architecture to filter, down-convert, and sample the feedback signal:[1]

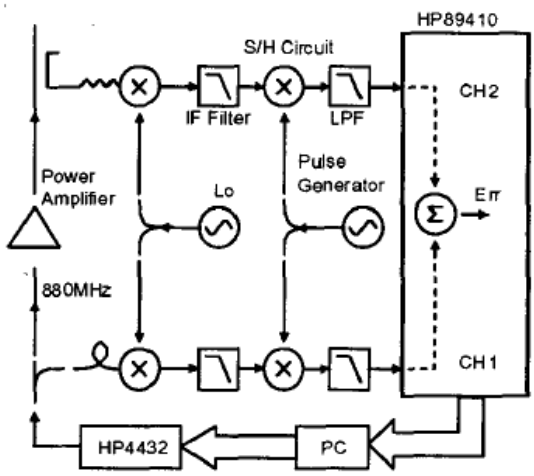

Figure 5: Subsampling Downconverter Test Bed Block Diagram.

EX-1014, Fig. 5. Further, Mostafa describes a subsampling receiver that includes filters, a track and hold block, and a single ADC to provide high performance at a reduced manufacturing cost and power. EX-1019, 3:65-67; *see also* EX-1020 (inventors' own discussion of subsampling receivers at least 3 years prior to the '296 Patent). EX-1003, ¶54.

[1] For both direct and indirect learning, the feedback path from the PA acts as a receiver and, consistent with any receiver, the feedback path requires filtering, down-conversion, and sampling. EX-1003, ¶54.

B. Summary of the ’296 Patent

The ’296 Patent explains that PAs display nonlinear behavior that “introduce unwanted intermodulation distortions into the system, which could significantly degrade the output signal quality.” EX-1001, 1:39-41. In dual-band systems, the PA’s nonlinear behavior will further introduce intermodulation, cross-modulation, and harmonic products (blue) caused by interactions between the two fundamental signals (green). *Id.,* 1:50-54; EX-1003, ¶¶63-67.

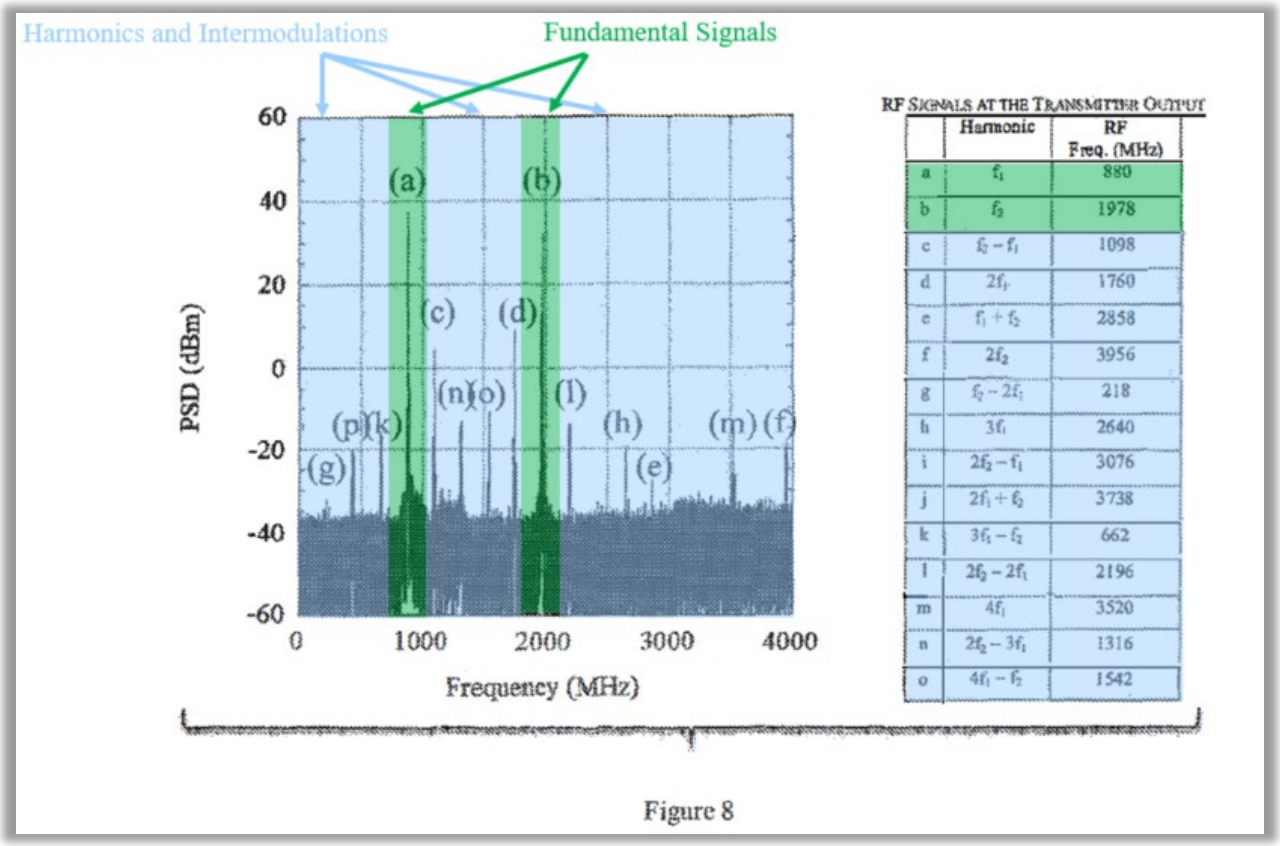

	Harmonic	RF Freq. (MHz)
a	f_1	880
b	f_2	1978
c	$f_2 - f_1$	1098
d	$2f_1$	1760
e	$f_1 + f_2$	2858
f	$2f_2$	3956
g	$f_2 - 2f_1$	218
h	$3f_1$	2640
i	$2f_2 - f_1$	3076
j	$2f_1 + f_2$	3738
k	$3f_1 - f_2$	662
l	$2f_2 - 2f_1$	2196
m	$4f_1$	3520
n	$2f_2 - 3f_1$	1316
o	$4f_1 - f_2$	1542

EX-1001 Fig. 8 (Annotated); EX-1003, ¶63.

The ’296 Patent purports to provide a solution for this by using a “multiple branch digital predistortion linearization architecture and digital signal processing algorithms for impairments-free operation and linearized multi-band transmitter.” EX-1001, 3:48-50. Fig. 1 illustrates a linearization architecture including a signal predistorter block (purple), dual-band PA, signal observation and feedback loop (blue and red), and analyzing and modeling stage (orange). EX-1003, ¶64.

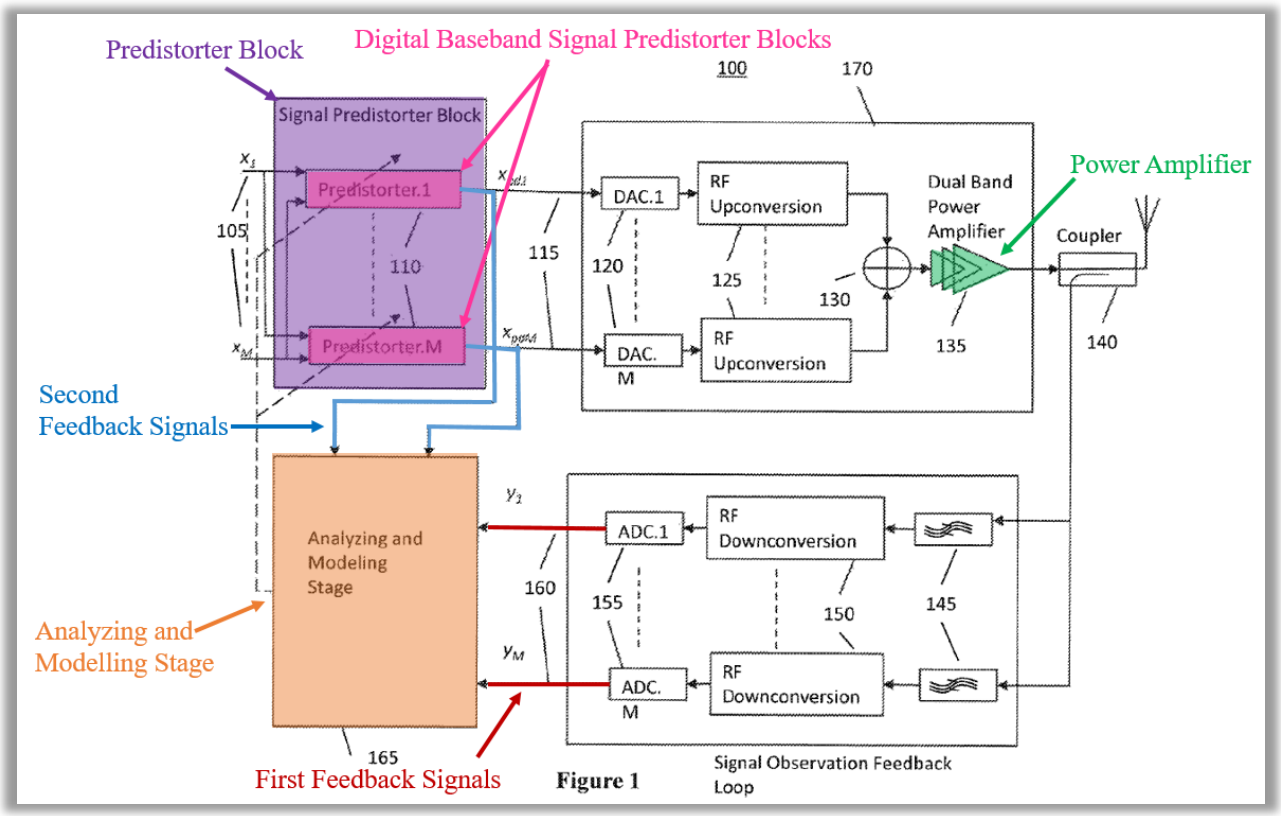

EX-1001 Fig. 1 (Annotated).

The system receives input signals (x_1 to x_m) which are fed into M distinct predistorters 110 (pink) to generate output signals (x_{pd1} to x_{pdM}). The digital output

signals are converted to analog and ultimately amplified and transmitted. A coupler 140 takes a feedback signal from the output of the PA 135, and then the system filters, frequency down-converts, digitizes, and passes signals (y_1 to y_M) to the analyzing and modeling stage (orange). The analyzing and modeling stage receives first feedback signals (y_1 to y_M, red), and second feedback signals (x_{pd1} and x_{pdM}, blue). EX-1001, 3:51-65; EX-1003, ¶65.

The specification includes the following equations for compensation of the nonlinearities created by PA:

$$x_{pd1}(n) = \sum_{m=0}^{M-1} \sum_{k=0}^{K-1} \sum_{j=0}^{k} c_{1,j,k,m} x_1(n-m) |x_1(n-m)|^{k-j} |x_2(n-m)|^{j}$$

$$x_{pd2}(n) = \sum_{m=0}^{M-1} \sum_{k=0}^{K-1} \sum_{j=0}^{k} c_{2,j,k,m} x_2(n-m) |x_2(n-m)|^{k-j} |x_1(n-m)|^{j}$$

EX-1001, 4:10-15.

In another embodiment, "subsampling based receiver 300" is used. EX-1001, 4:56-57. Receiver 300 (blue) consists of a singular "RF bandpass filter 305, low-noise amplifier (LNA) 310, subsampling receiver 345 including the track and hold (T&H) 320, and ADC 325 followed by baseband digital signal processing (DSP) unit 330." *Id*., 4:56-57; EX-1003, ¶67.

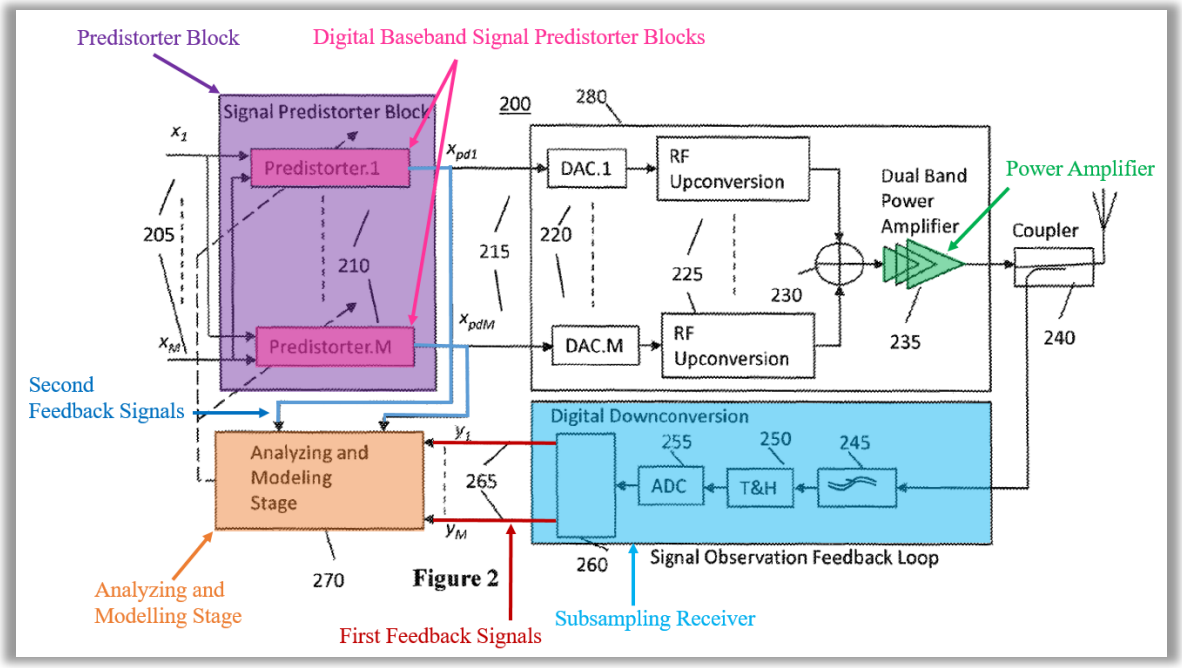

EX-1001, Fig. 2 (Annotated).

C. Summary of the Prosecution History

During examination, the Office rejected the Challenged Claims as obvious over Suzuki (US 2005/0168283) and Fuller (US 8,391,809). EX-1002, 90-94. Applicant amended Claim 1 to add an "analyzing and modeling stage" and to state that the "digital baseband signal predistorters effect[] predistortion of concurrent input signals." EX-1002, 115. Applicant also argued that its claims were limited to indirect learning. EX-1002, 119-120.

The Examiner then rejected Claims 1-10 as obvious over Suzuki in view of Kim (US 2012/0154038), and as obvious over Fuller in view of Kim. EX-1002, 155-158. In response, Claims 1 and 10 were amended to recite that "second

feedback signals [are] taken concurrently from the concurrent predistorted signals." EX-1002, 176. Applicant again argued that both Suzuki and Fuller teach direct learning schemes (as opposed to indirect learning), and that Kim does not teach or suggest "concurrent predistorted signals." EX-1002, 177.

The Challenged Claims were then allowed. According to the Examiner, the applied prior art failed to teach "second feedback signals are taken concurrently from the concurrent predistorted signals…" EX-1002, 231, 232. As shown by this Petition, however, it was well known to use the claimed feedback signals as the input to an "analyzing and modeling stage."

D. Claim Construction

Petitioners propose that each claim term be given its plain and ordinary meaning in this proceeding, and that no specific construction of any claim term is required because the prior art meets each of the claim terms under any reasonable construction. EX-1003, ¶¶68-74.

To aid the Board's review, however, Petitioners provide additional context surrounding the use of the terms "band" and "channel," which appear in the claims, but are not defined in the specification. For example, dependent claim 2 explains that the "concurrent digital multi-*band* predistortion block further comprises" "a plurality of the digital baseband signal predistorters each corresponding to a respective *channel*." EX-1003, ¶69.

A POSA would have understood "band" and "channel" to correspond to related concepts, with a "band" generally corresponding to a continuous range of frequencies between specified upper and lower limits, and that a "channel" is a particular path (and corresponding signal frequency range) over which signals can be sent. EX-1023 (IEEE Standard 100, 200). Thus, a given "band" may comprise one or more "channels," and if a system is "multi-band," it is comprised of multiple bands with each band containing one or more channels. Likewise, multi-channel systems are comprised of one or more channels within one or more bands. A POSA would have also understood that wireless standards (*i.e.*, 3G, 4G, and 5G) define the technical requirements around "bands" and the one or more "channels" that make up a particular band. EX-1003, ¶¶70-71.

While none of this is explained in the specification, the '296 Patent purports to "relate[] to multi-band digital predistortion linearization" (EX-1001, 1:27-28) and, in the patent's single usage of the word "channel," the '296 Patent explains that "out-of-band intermodulation terms" are "usually filtered out before transmission using RF filter to avoid signal quality degradation and interference with signals at the adjacent *channels*" (*id.,* 5:9-14 (emphasis added).) Thus, the specification appears to suggest that in the aforementioned context, a "channel" is the frequency range corresponding to a signal to be transmitted within a particular band. EX-1003, ¶72.

Similarly, and in the context of the '296 Patent's disclosed "processing model equations of the linearization processing algorithm 165," "$x_1(n)$ and $x_2(n)$ are the input signals [and] $x_{pd1}(n)$ and $x_{pd2}(n)$ are the predistorted signals to the input of the dual-band transmitter." EX-1001, 4:2-21. In other words, and in the context of a "dual-band" transmitter that transmits over two "bands" or frequencies, the paths of the input signals to the predistorter(s), with corresponding frequency ranges, are simply the claimed "channels," and there will be one channel or signal path corresponding to each "band" of the transmitter. Thus, each input signal path to a predistorter has a particular frequency range and represents a "channel." EX-1003, ¶73. This is also what is depicted in the patent's architectural layouts, Figs. 1 and 2.

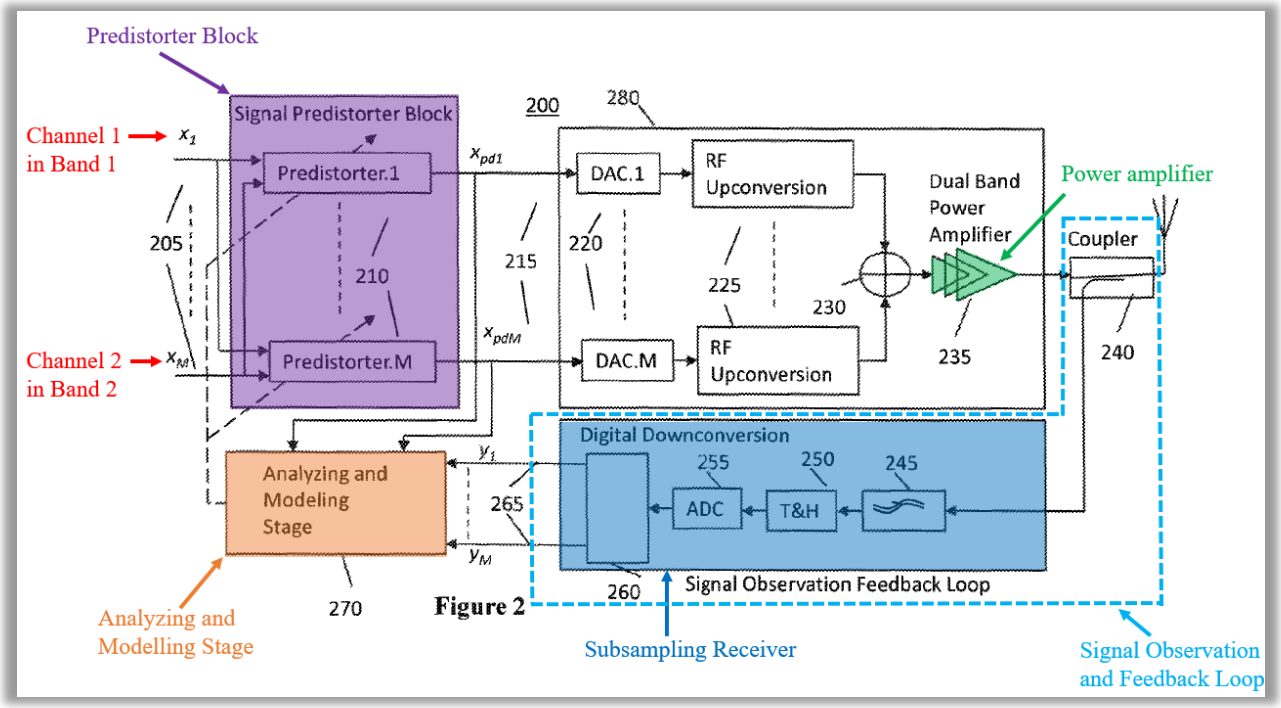

See, e.g., EX-1001, Fig. 2 (Annotated).

The prior art relied on herein discloses any reasonable interpretation of "band" and "channel" because both Peroulas and Posti disclose transmitters/PAs that are linearized using predistorters that take, as part of their input, a signal, with a corresponding frequency range (or "channel"), corresponding to each "band" of the transmitter, exactly as described by the '296 Patent. EX-1003, ¶74.

E. Priority Date

The '296 Patent was filed on May 1, 2017, and claims priority through a string of continuations to U.S. Patent No. 8,817,859, filed on October 14, 2011.

F. Person of Ordinary Skill in the Art

For purposes of this IPR, Petitioners assert that a POSA would have been someone with at least (1) a bachelor's degree in electrical engineering or a related field, and (2) either (a) a master's degree in electrical engineering or a related filed, or (b) two or more years of work or research experience in wireless communications and, in particular, power amplification of radio signals. EX-1003, ¶¶76-79.

VI. IDENTIFICATION OF CHALLENGES

A. Challenged Claims

This Petition challenges Claims 1–10.

B. Statutory Grounds for Challenges

The Challenges are set forth in detail below and summarized as follows:

Ground	Claims	Basis (pre-AIA)	References
1	1-7, 10	35 U.S.C. § 103	Peroulas
2	8, 9	35 U.S.C. § 103	Peroulas in view of Cidronali
3	1-7, 10	35 U.S.C. § 103	Posti
4	8, 9	35 U.S.C. § 103	Posti in view of Cidronali

Peroulas published on October 4, 2012 (EX-1005), and claims the benefit of a March 28, 2011, International filing date, and is prior art at least under 35 U.S.C. § 102(a)/(e). Cidronali published on January 9, 2009 (EX-1006)[2] and Posti issued on February 14, 2006 (EX-1009). Both are prior art to the '296 Patent under at least pre-AIA 35 U.S.C. §102(b). None of these references were previously before the Office.

VII. IDENTIFICATION OF HOW THE CLAIMS ARE UNPATENTABLE

A. Ground 1: Claims 1-7 and 10 are Obvious Under 35 U.S.C. § 103(a) over Peroulas

1. Peroulas

Peroulas relates to "a method for pre-distorting and a pre-distorter." EX-1005, 1:3-4. Peroulas explains that to improve efficiency, PAs should be driven into their non-linear region, resulting in higher amounts of distortion. The goal of the

[2] Additional evidence establishing the public accessibility of Cidronali is provided in EX-1007.

predistortion function is to create a signal that, when cascaded with the PA, produces an output that is linear overall. EX-1005, 7:25-8:1; EX-1003, ¶¶82-83.

Peroulas' solution includes a predistortion module (purple) having a plurality of predistortion units, each corresponding to one predistortion function (not shown, but producing PD_1 and PD_2, respectively). EX-1005, 6:25-27; *see also id.*, Abstract ("pre-distortion module, which is configured to predistort a plurality of baseband input signals by an equal number of pre-distortion functions to obtain equal number of pre-distorted signals..."); 6:11-20, 7:1-5, 7:26-27. Peroulas uses indirect learning where feedback is taken from the output of the predistorters and the output of the PA, and concurrently fed into a MIMO Capture Buffer 309 and DSP Block 316 (orange) to update the predistortion functions used to linearize the PA. EX-1005, 8:10-15, 9:1-10; EX-1003, ¶83.

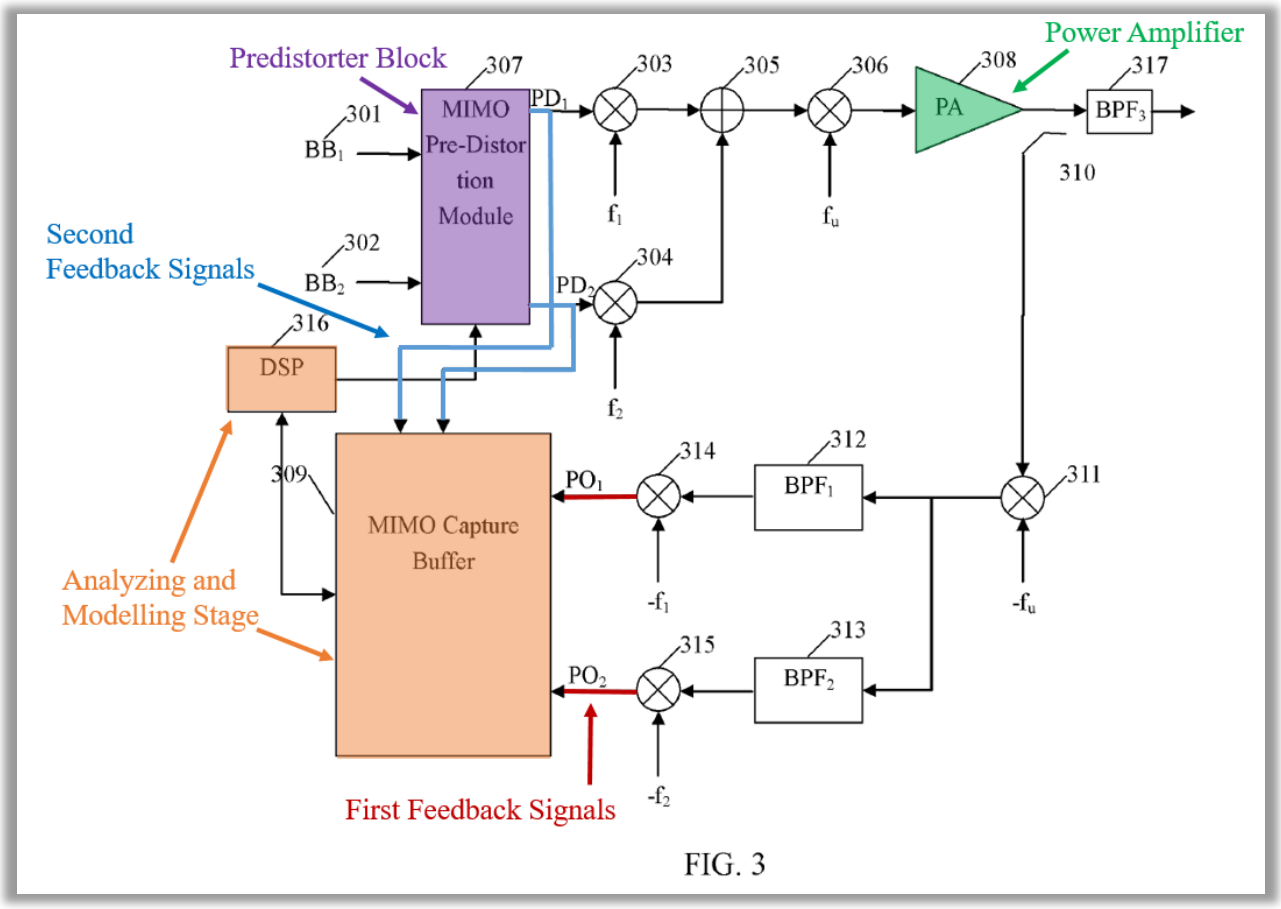

FIG. 3

EX-1005, Fig. 3 (Annotated).

2. Detailed Application to the Challenged Claims

<u>Claim 1</u>

[1pre] A linearized transmitter comprising:

To the extent the preamble is limiting, Peroulas discloses a "method for pre-distorting and a pre-distorter," for a *transmitter,* such that the output of the predistorter and PA is linear overall. EX-1005, 6:8-27, 14:17-23; EX-1003, ¶84.

[1a] a digital signal predistorter block including digital baseband signal predistorters effecting predistortion of concurrent input signals to output concurrent predistorted signals;

As shown below, Peroulas discloses a MIMO Pre-Distortion Module (purple) (*digital signal predistorter block*) configured to concurrently predistort a plurality of baseband signals (BB_1 and BB_2) corresponding to a respective channel (*concurrent input signals*), by an equal number of predistortion functions to obtain an equal number of predistorted output signals (PD_1 and PD_2, *concurrent predistorted signals*). EX-1005, 8:12-14, 22:26-23:9; EX-1003, ¶¶85-89.

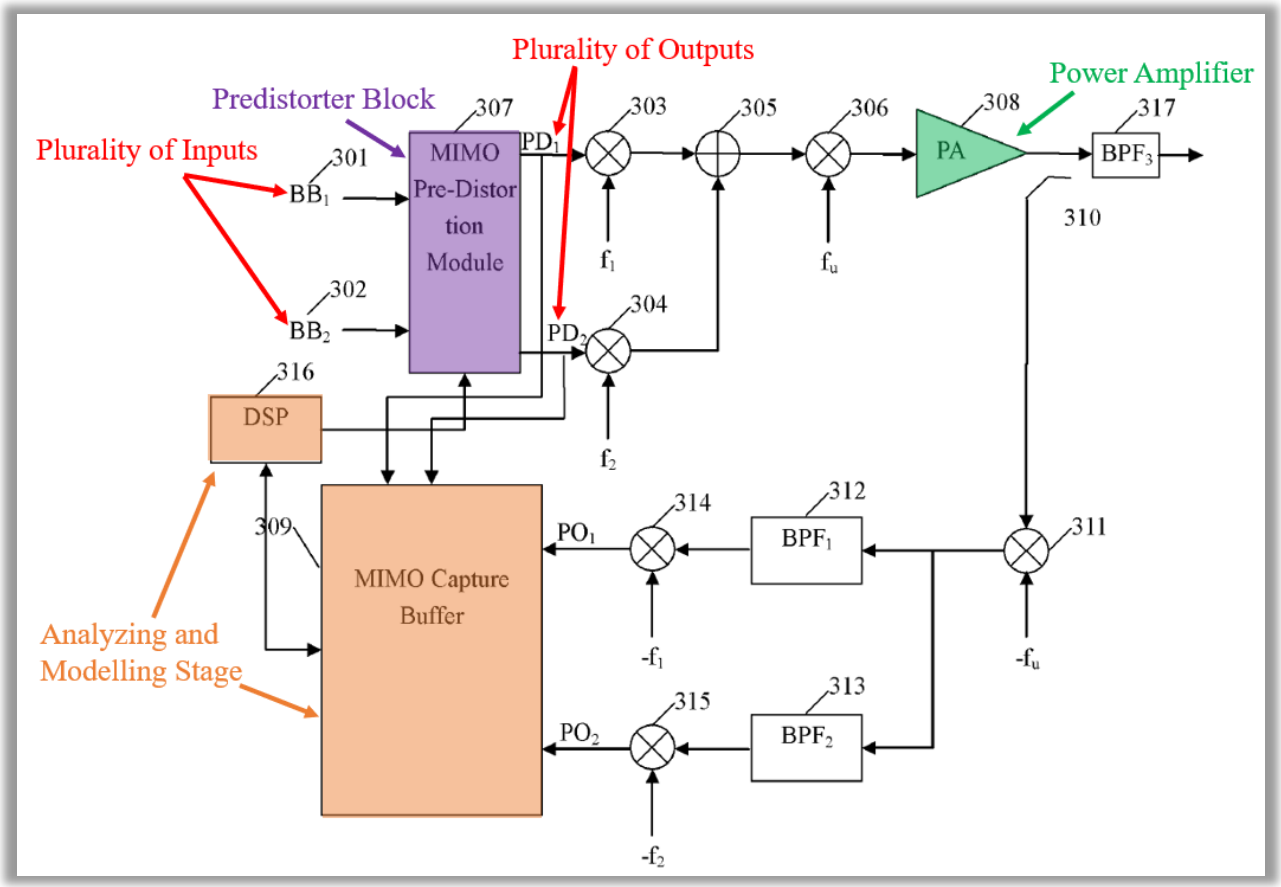

EX-1005, Fig. 3 (Annotated).

The Pre-Distortion Module includes "a plurality of pre-distortion units, wherein all of the baseband input signals input into each pre-distortion unit, and each pre-distortion unit corresponds to one pre-distortion function and has one output" (*a digital signal predistorter block including digital baseband signal predistorters effecting predistortion of concurrent input signals*). EX-1005, 6:25-27; EX-1003, ¶86.

Specifically, in Peroulas' system, the Pre-Distortion Module includes two predistortion units each outputting PD_1 or PD_2 (*concurrent output signals*). EX-1003, ¶87. Both predistortion units receive each of the concurrent input signals, BB_1 and BB_2, as illustrated by Equations 15 and 16:

$$(15)\ PD_1(n) = \sum_{j=0}^{M-1}\sum_{k_1=0}^{L_1-1}\sum_{k_{2=0}}^{L_2-1} h_{1,j,k_1,k_2} BB_1(n-j)|BB_1(n-j)|^{k_1}|BB_2(n-j)|^{k_2}$$

$$(16)\ PD_2(n) = \sum_{j=0}^{M-1}\sum_{k_1=0}^{L_1-1}\sum_{k_{2=0}}^{L_2-1} h_{2,j,k_1,k_2} BB_2(n-j)|BB_1(n-j)|^{k_1}|BB_2(n-j)|^{k_2}$$

The use of a common index n, within either Equation 15 or 16, confirms that both inputs signals BB_1 and BB_2 are received by each predistortion function. Moreover, both BB_1 and BB_2 are referenced in each of equations 15 and 16. Fig. 3 also depicts concurrent predistorted signals PD_1 and PD_2 being concurrently input into the MIMO Capture Buffer 309 and thus, for any given number of baseband input signals, the

output of each predistortion function ($PD_1(n)$ and $PD_2(n)$) is concurrent. EX-1003, ¶88.

Further, Peroulas' first predistortion unit outputs a predistorted signal PD_1 to frequency shifter 303 and 306 resulting in a predistorted signal centered at f_{c1}, and the second predistortion unit outputs a predistorted signal PD_2 input to frequency shifter 304 and 306 resulting in a predistorted signal centered at f_{c2} (*to output concurrent predistorted signals*). EX-1005, 22:20-25. Accordingly, Peroulas' MIMO Pre-Distortion Module effects predistortion of concurrent input signals to output concurrent predistorted signals, both as depicted in Peroulas' figures and as further illustrated by Peroulas' predistortion functions/equations. EX-1003, ¶89.

[1b] a power amplifier block connected to amplify the predistorted signals; and

As shown in Fig. 3 (above), Peroulas includes a power amplifier 308 (green) and adder 305 to combine and amplify the concurrent predistorted signals PD_1 and PD_2 (*a power amplifier block connected to amplify the predistorted signals*). EX-1005, 6:18-19, 10:8-10 ("the combined signal being amplified by a power amplifier (PA)"), 14:17-23, 23:10-20 ("combined signal is forwarded to a final frequency shifter 306 … the output of the final frequency shifter 306 is sent to a power amplifier (PA)"). Peroulas' disclosure is consistent with the disclosure of the '296 Patent that describes "an RF power amplification block, the RF power amplification

block including the concurrent multi-band power amplifier; and an RF power combining network." EX-1001, 2:39-41. Thus, the claimed "block" can include the transmitter's PA and other associated components, which is disclosed in Peroulas. EX-1003, ¶¶82-83.

[1c] an analyzing and modelling stage receiving first feedback signals taken from an output of the power amplifier, and second feedback signals taken concurrently from the concurrent predistorted signals and using the first feedback and the second feedback signals in the analyzing and modelling stage to model a nonlinearity in the power amplifier, wherein the digital baseband signal predistorters are updated by the analyzing and modelling stage.

Peroulas's MIMO Capture Buffer 309 (orange) and DSP Block 316 (orange) are the claimed *analyzing and modeling stage*. EX-1003, ¶¶92-96. The MIMO Capture Buffer 309 receives PO_1 and PO_2 (*receiving first feedback signals*) (red) "derived from a signal output from a coupler 310 which extracts a small portion (typically less than 1% of the PA output power) of the signal output from the PA 308." EX-1005, 25:17-22. The MIMO Capture Buffer 309 also receives PD_1 and PD_2 (*second feedback signals*) (blue) that "are produced by the multiple input multiple output (MIMO) Pre-Distortion Module 307" (*receiving . . .second feedback signals taken concurrently from the concurrent predistorted signals*). EX-1005, 25:15-17; EX-1003, ¶¶92.

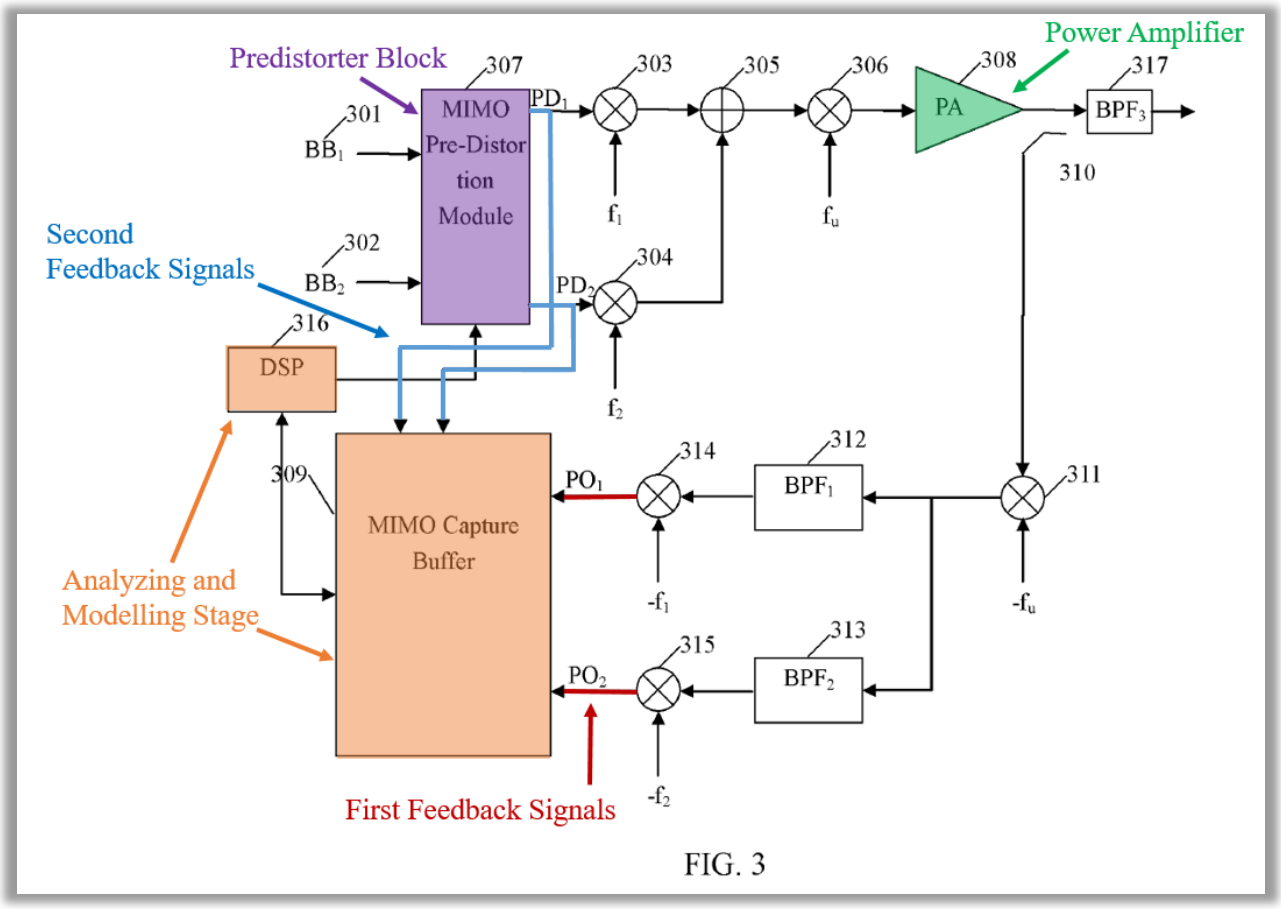

FIG. 3

EX-1005 Fig. 3 (Annotated).

To use the first and second feedback signals to model a nonlinearity in the power amplifier, Peroulas' DSP Block 316 (*analyzing and modeling stage*) uses the outputs of the MIMO Capture Buffer 309 and least squares minimization to obtain estimates $\hat{h}_{i,j,k_1,k_2}$ for the coefficient values h_{i,j,k_1,k_2} of the predistortion functions (*digital baseband signal predistorters*). EX-1005, 26:15-18. The estimated coefficients $\hat{h}_{i,j,k_1,k_2}$ are chosen such that "the cascade of the MIMO pre-distortion function, and the PA will be linear overall." EX-1005, 11:21-22; EX-1003, ¶93.

After the values $\hat{h}_{i,j,k_{1,},k_2}$ are calculated, the DSP Block 316 (*analyzing and modeling stage*) transmits the values to the Pre-Distortion Module 307 (*digital signal predistortion block*) and each $h_{i,j,k_{1,},k_2}$ value in the predistortion functions (*digital baseband signal predistorters*) is "simultaneously updated and replaced with the $\hat{h}_{1,j,k_{1,},k_2}$ and $\hat{h}_{2,j,k_{1,},k_2}$ values." EX-1005, 28:17-21; EX-1003, ¶94.

Similarly, Fig. 3 depicts Peroulas' predistorted signals PD_1 and PD_2 (*second feedback signals*) being concurrently provided to the MIMO Capture Buffer 309, thereby disclosing *second feedback signals taken concurrently from the concurrent predistorted signals*. To the extent Patent Owner argues that Peroulas' does not expressly state this, despite what is shown in Fig. 3, a POSA would have been motivated to provide predistorted signals PD_1 and PD_2 to MIMO Capture Buffer 309 concurrently to not only avoid delays associated with serial processing, but to fulfill Peroulas' disclosure that its predistorters are "simultaneously updated and replaced with the $\hat{h}_{1,j,k_{1,},k_2}$ and $\hat{h}_{2,j,k_{1,},k_2}$ values". EX-1005, 28:17-21. In other words, because both predistorters within Peroulas' MIMO Pre-Distortion Module are "simultaneously updated" and not updated serially, and because Equation 27 for $\hat{h}_{1,j,k_{1,},k_2}$ requires PD_1 as an input and $\hat{h}_{2,j,k_{1,},k_2}$ requires PD_2 as an input (EX-1005, 38:3-7), a POSA would have been motivated to provide PD_1 and PD_2 to Peroulas' MIMO Capture Buffer concurrently to solve all necessary equations within one

iteration. EX-1003, ¶95; *see also* EX-1005, 28:22-23 ("The process of capturing data, performing calculations, and finally updating the coefficients … can be considered one iteration.").

Accordingly, Peroulas uses its *first and second feedback signals in its analyzing and modeling stage to both model a nonlinearity in the power amplifier, and to update Peroulas' digital baseband signal predistorters*. EX-1003, ¶96; *Game & Tech. Co. v. Activision Blizzard Inc.*, 926 F.3d 1370, 1381 (Fed. Cir. 2019) ("[A] patent can be obvious in light of a single prior art reference if it would have been obvious to modify that reference to arrive at the patented invention.").

Claim 2

[2pre] The linearized transmitter of claim 1, wherein said concurrent digital multi-band predistortion block[3] further comprises:

[2a] a plurality of the digital baseband signal predistorters each corresponding to a respective channel; and

As shown in annotated Fig. 3, Peroulas's MIMO Predistortion Module 307 (purple) includes at least two predistortion units (*a plurality of digital baseband*

[3] Although Claim 2 refers to "said" "concurrent digital *multi-band* predistortion block," Claim 1 only introduces "a digital signal predistorter block." For purposes of this Petition, and so the prior art can be analyzed, Petitioners have treated Claim 1 as incorporating a "multi-band" requirement. In other words, because the prior art discloses multi-band transmitters and multi-band predistortion blocks, the prior art can be assessed against Claim 2 despite its antecedent basis issues.

signal predistorters) equal in number to the number of bands of Peroulas' multi-band transmitter, and each corresponding to a particular input channel pathway and frequency range of the respective input signal. EX-1005, 6:25-27 ("the pre-distortion module includes a plurality of pre-distortion units."), 22:26-23:2. More specifically, Peroulas' MIMO Predistortion Module 307 is configured such that it receives "a plurality of baseband input signals being pre-distorted ***by an equal number of predistortion functions*** to obtain [an] equal number of predistorted signal(s) respectively, wherein all of the baseband input signals input into every pre-distortion function, and each pre-distortion function has one output." EX-1005, 10:4-7 (emphasis added); EX-1003, ¶¶97-100.

In the dual-band scenario, each of Peroulas' predistortion units receives two baseband inputs and outputs one baseband signal (PD_1 or PD_2 respectively, as defined by Equations 15 and 16). Peroulas describes the predistortion function in Equations 15 and 6 as follows:

$$(15)\ PD_1(n) = \sum_{j=0}^{M-1}\sum_{k_1=0}^{L_1-1}\sum_{k_{2=0}}^{L_2-1} h_{1,j,k_1,k_2} BB_1(n-j)|BB_1(n-j)|^{k_1}|BB_2(n-j)|^{k_2}$$

$$(16)\ PD_2(n) = \sum_{j=0}^{M-1}\sum_{k_1=0}^{L_1-1}\sum_{k_{2=0}}^{L_2-1} h_{2,j,k_1,k_2} BB_2(n-j)|BB_1(n-j)|^{k_1}|BB_2(n-j)|^{k_2}$$

EX-1005, 24:12-23. Peroulas' Equation 15 effects predistortion of input BB_1 301 to generate output signal PD_1 using both BB_1 and BB_2 input signals. In other words,

the predistortion corresponding to Equation 15 is a first of the plurality of digital baseband signal predistorters that corresponds to the input signal BB_1 and BB_1's occupied frequency range (*i.e.,* "channel"). EX-1003, ¶98.

Likewise, Peroulas' Equation 16 effects predistortion of input signal BB_2 302 to generate output signal PD_2 using both BB_1 and BB_2 input signals. The predistortion corresponding to Equation 16 is a second of the plurality of digital baseband signal predistorters that corresponds to the input signal BB_2 and BB_2's occupied frequency range. EX-1003, ¶99. This is illustrated below.

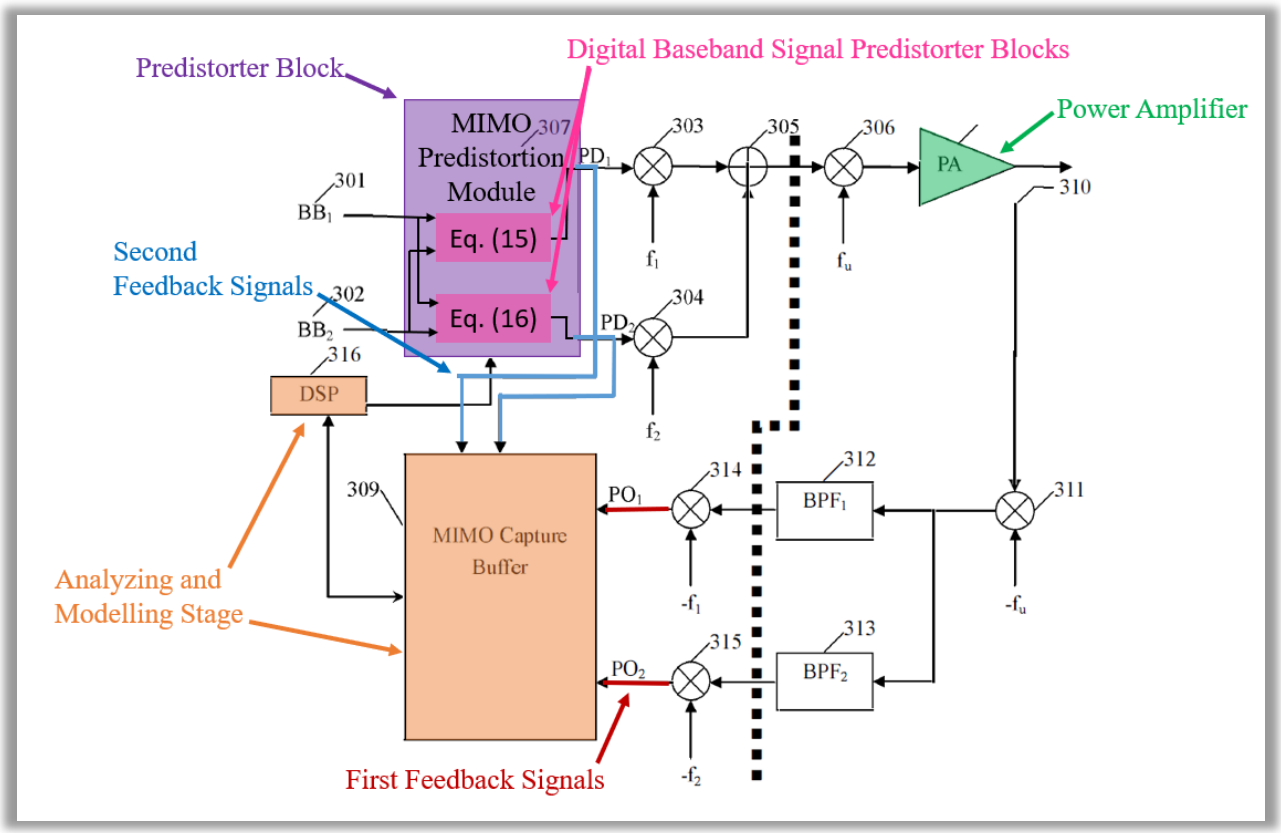

EX-1005, Fig. 4 (Annotated and Modified).

Further, the goal of Equations 15 and 16 in the multi-band transmitter "is to produce signals PD_1 and PD_2 sent to the PA 308 such that the output only contains signals BB_1 301 and BB_1 302 centered at frequencies f_{c1} and f_{c2}." EX-1005, 24:1-3. Peroulas' carrier frequencies f_{c1} and f_{c2} each correspond to a single channel located in separate bands. EX-1003, ¶100. Taken in combination with the fact that each baseband input signal corresponds to a single predistortion unit, Peroulas discloses *a plurality of the digital baseband signal predistorters each corresponding to a respective channel. Id.*

[2b] and a signal observation feedback loop for generating said first feedback signals.

Peroulas discloses that "two signals recorded by the MIMO capture buffer 309 are derived from a signal output from a coupler 310 which extracts a small portion (typically less than 1% of the PA output power) of the signal output from the PA 308." EX-1005, 25:15-22. "The output of the coupler 310 is connected to a frequency shifter 311 which shifts the signal down by f_u Hz." *Id.*, 25:20-22. And as shown in Fig. 4 (dashed line), analog to digital conversion by sampling occurs after BPF_1 312 and BPF_2 313. EX-1005, 30:10-18. The cascade of the above components generates feedback signals PO_1 and PO_2 and thus constitutes *a signal observation and feedback loop*. EX-1003, ¶101.

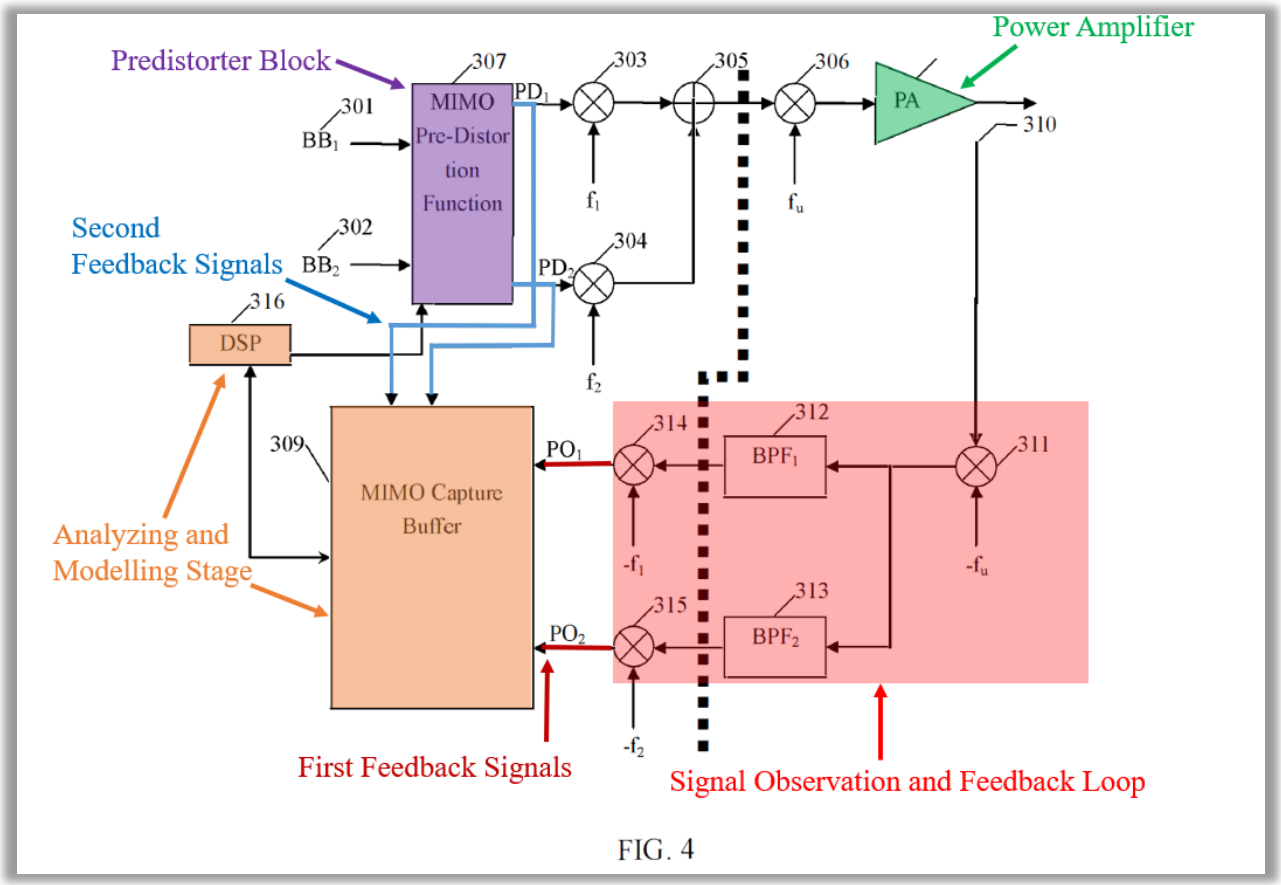

FIG. 4

EX-1005, Fig. 4 (Annotated).

<u>Claim 3</u>

[3pre] The linearized transmitter of claim 2, wherein said plurality of digital baseband signal predistorters further comprises:

[3a] a plurality of inputs, each input corresponding to a single frequency channel; and

As explained above in [2a], Peroulas' linearized transmitter includes a MIMO Pre-distortion Module 307 (purple) that has at least two predistortion units corresponding to at least two predistortion functions (*digital baseband signal predistorters*). *See, e.g.,* EX-1005, 15:14-17. In the dual band scenario, the two

predistortion units, corresponding to Equations 15 and 16, each receive a plurality of inputs BB_1 and BB_2:

$$(15)\ PD_1(n) = \sum_{j=0}^{M-1}\sum_{k_1=0}^{L_1-1}\sum_{k_{2=0}}^{L_2-1} h_{1,j,k_1,k_2} BB_1(n-j)|BB_1(n-j)|^{k_1}|BB_2(n-j)|^{k_2}$$

$$(16)\ PD_2(n) = \sum_{j=0}^{M-1}\sum_{k_1=0}^{L_1-1}\sum_{k_{2=0}}^{L_2-1} h_{2,j,k_1,k_2} BB_2(n-j)|BB_1(n-j)|^{k_1}|BB_2(n-j)|^{k_2}$$

EX-1005, 24:12-23; EX-1003, ¶¶102-103.

Each input signal BB_1 and BB_2 correspond to their own channel/signal frequency range, and each corresponds to a single frequency channel. Indeed, Peroulas explains that "the intent of the multiband digital pre-distorter is that BB_1 301 and BB_2 302 appear on the output of the PA 308 centered at f_{c1} and f_{c2}, respectively" EX-1005, 22:21-23. In other words, input signals/channels BB_1 and BB_2 correspond to the single frequency channels centered at f_{c1} and f_{c2}. EX-1003, ¶103.

[3b] a plurality of outputs, each output corresponding to a single frequency channel, and each output connected to an input of a concurrent multi-band transmitter.

Peroulas' MIMO Predistortion Module 307 produces a plurality of outputs PD_1 (corresponding to an output at f_{c1}) and PD_2 (corresponding to an output at f_{c2}),

as shown in Fig. 3. EX-1005, 22:26-27. These are Peroulas' *plurality of outputs, each corresponding to a single frequency channel*, as claimed. EX-1003, ¶¶104-107.

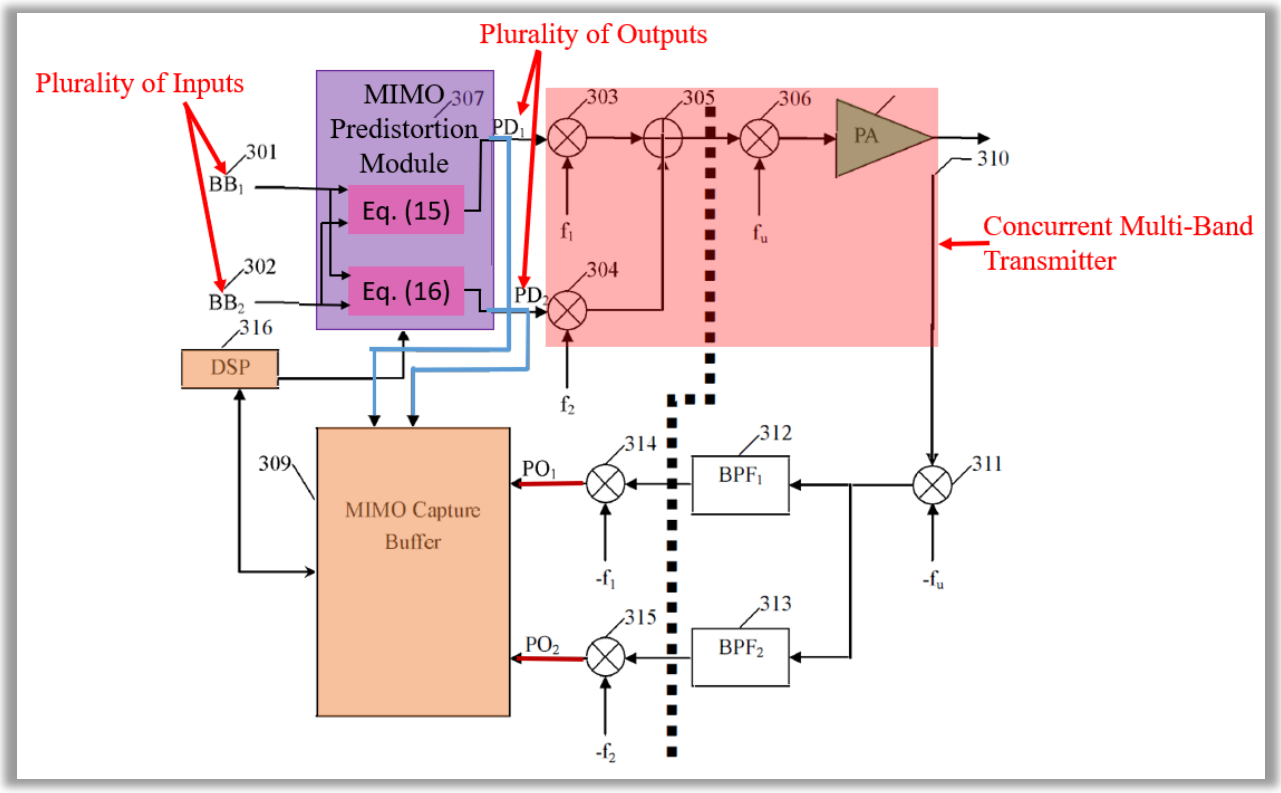

EX-1005, Fig. 3 (Annotated).

More specifically, the signals PD_1 and PD_2 are output from MIMO Predistortion Module 307 at baseband before being shifted to f_1 and f_2 by frequency shifters 303 and 304. EX-1005, 23:2-4. The signals are then combined via adder 305, and the combined signal is further frequency shifted to f_u by frequency shifter 306 prior to amplification and transmission. EX-1005, 23:3-17. Peroulas' frequency shifting architecture results in signals PD_1 and PD_2 shifted to transmitting carrier frequencies f_{c1} and f_{c2}. EX-1005, 24:1-3. Accordingly, the distinct frequency shifters

(303 and 304) with distinct center frequencies (f_1 and f_2) for distinct output signals (PD_1 and PD_2) define a plurality of outputs *each corresponding to a single frequency channel*. EX-1003, ¶¶105-106.

Finally, claim 3 requires "each output connected to an input of a concurrent multi-band transmitter." The specification explains that "$X_{pd1}(n)$ and $X_{pd2}(n)$ are the predistorted signals to the input of the dual-band transmitter" (EX-1001, 4:19-21), thus claim 3 identifies the components following predistortion as the "concurrent multi-band transmitter." As shown in the annotated figure, above, each output of Peroulas' MIMO Pre-Distortion Module carrying signals PD_1 and PD_2 is *connected to an input of a concurrent multi-band transmitter* at frequency shifters 303 and 304. EX-1005, 23:2-20; EX-1003, ¶107.

<u>Claim 4</u>

[4pre] The linearized transmitter of claim 2, wherein said analyzing and modeling stage further comprises:

[4a] a plurality of outputs connected to update the parameters of said digital baseband signal predistorters; and

Peroulas' uses MIMO Capture Buffer 309 and DSP Block 316 (orange) (*analyzing and modeling stage*) to estimate and update the coefficients in the predistortion function (*digital baseband signal predistorters*) such that the cascade of the predistortion function and PA is linear overall. EX-1005, 11:22-22, 25:10-11, 25:15-19, 26:10-12, 26:15-18; EX-1003, ¶¶108-111.

To do this, Peroulas' "DSP 316 is used to read out the values captured in the MIMO capture buffer 309 and based on the captured values PD_1, PD_2, PO_1 and PO_2," Equations 19 and 20 are solved to obtain the values of $\hat{h}_{1,j,k_1,k_2}$ and $\hat{h}_{2,j,k_1,k_2}$. EX-1005, 26:15-20.

$$(19)\ PD_1(n) = \sum_{j=0}^{M-1}\sum_{k_1=0}^{L_1-1}\sum_{k_{2=0}}^{L_2-1} \hat{h}_{1,j,k_1,k_2} PO_1(n-j)|PO_1(n-j)|^{k_1}|PO_2(n-j)|^{k_2}$$

$$(20)\ PD_2(n) = \sum_{j=0}^{M-1}\sum_{k_1=0}^{L_1-1}\sum_{k_{2=0}}^{L_2-1} \hat{h}_{2,j,k_1,k_2} PO_2(n-j)|PO_1(n-j)|^{k_1}|PO_2(n-j)|^{k_2}$$

EX-1005, 26:19-20. "After these values have been calculated, the DSP transmits these values to the MIMO pre-distortion module and all of the h_{1,j,k_1,k_2} and h_{2,j,k_1,k_2}values of the MIMO pre-distortion function in the MIMO pre-distortion module will be ***simultaneously updated and replaced*** with the $\hat{h}_{1,j,k_1,k_2}$ and $\hat{h}_{2,j,k_1,k_2}$values." EX-1005, 28:18-21 (emphasis added); EX-1003, ¶109.

To update the predistortion function coefficients simultaneously, a POSA understood that Peroulas used a plurality of outputs/traces leading to each predistortion unit. In other words, a POSA would have understood that Peroulas' disclosure of a single line from DSP Block 316 to Pre-Distorter Module 307 would

include multiple outputs to simultaneously update Peroulas' predistortion units. EX-1003, ¶110.

To the extent Patent Owner asserts that Peroulas does not state that multiple outputs from the DSP are used, a POSA would be motivated to modify the teachings of Peroulas to include multiple outputs to simultaneously update Peroulas' predistortion units and avoid delays associated with processing the predistortion function coefficients in serial. A POSA understood that one straightforward and obvious way to implement this would be to include two separate wires/traces from DSP Block 316 going to each individual predistortion unit. EX-1005, 28:16-25; EX-1003, ¶111.

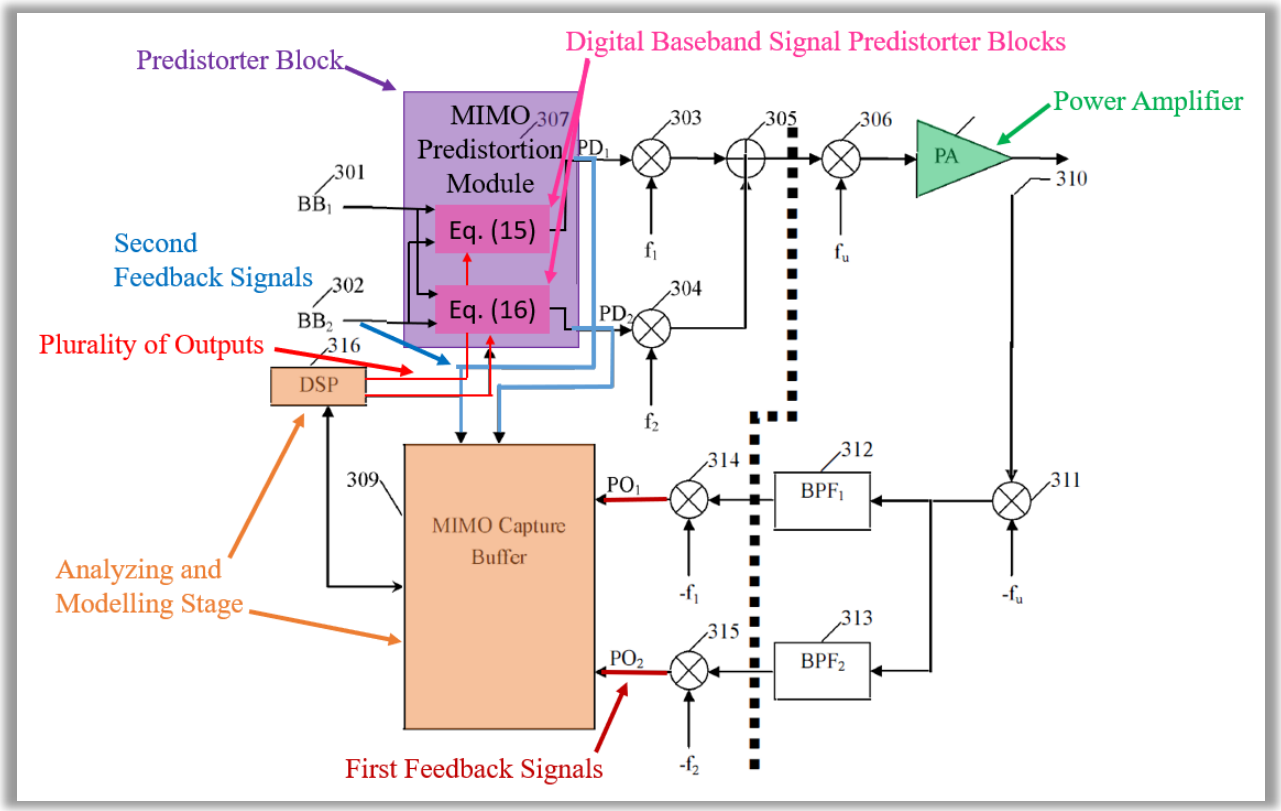

EX-1005, Fig. 3 (Annotated and Modified).

[4b] a plurality of inputs connected to both: (a) outputs of said signal observation feedback loop comprising said first feedback signals, and (b) to outputs of said digital signal predistorter block.

Peroulas' linearized transmitter uses an indirect learning approach where the system's MIMO Capture Buffer 309 and DSP Block 316 (orange) (*analyzing and modeling stage*) are connected to both signals PO_1 and PO_2 (*outputs of signal observation feedback loop*) (red), and signals PD_1 and PD_2 (*outputs of said digital signal predistorter block*) (blue). EX-1005, 25:15-19; §V.A.2.

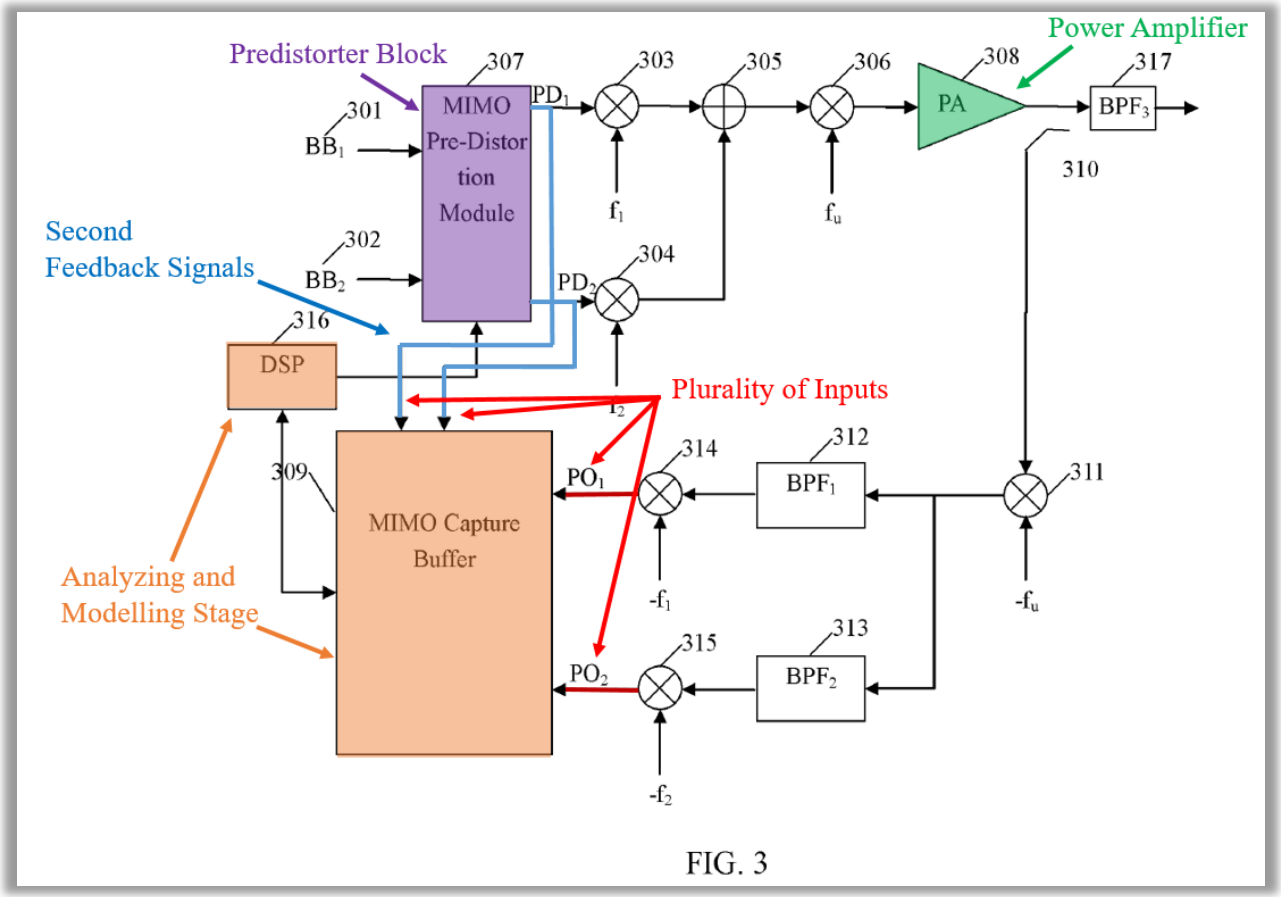

FIG. 3

EX-1005, Fig. 3 (Annotated). In this way, Peroulas' MIMO Capture Buffer and DSP Block (*analyzing and modeling stage*) include at least four inputs, which are connected to both the outputs of a signal observation and feedback loop and the digital signal predistorter block. EX-1003, ¶112.

Claim 5

[5pre] The linearized transmitter of claim 2, wherein said analyzing and modeling stage is further adapted to:

[5a] perform time alignment of complex baseband signals from sampling said first feedback signals; and

Peroulas explains that the propagation delay through components will be nonzero, thus the MIMO Capture Buffer 309 (*analyzing and modeling stage*) can measure and compensate for this by inserting an equivalent delay on the PD_1 and PD_2 signals (*second feedback signals*). EX-1005, 31:1-5 ("It should be clear to one skilled in the art that a real system will have a non-zero delay. This delay can be measured and compensated by inserting an equivalent delay on the PD_1 and PD_2 signals as they enter the MIMO capture buffer 309."). This delay insertion is time aligning the predistorted signals and feedback signals. And because Peroulas' MIMO Pre-Distortion Function 307 operates at baseband, feedback signals PO_1 and PO_2 are similarly frequency shifted back to baseband so that like signals are compared to one another. EX-1005, 12:6-7 (describing frequency shifting back to "zero" or baseband), 30:19-29; EX-1003, ¶¶113-114.

To the extent Patent Owner argues that Peroulas does not expressly state inserting a delay into either signal PO_1 or PO_2 (*signals from sampling said outputs of said power amplifier*), a POSA would have nonetheless found this either to be part of Peroulas' disclosure, or an obvious and trivial implementation detail. *KSR Int'l Co. v. Teleflex Inc.*, 550 U.S. 398, 421 (2007). Indeed, Peroulas already disclosed that time alignment may be required, and a POSA would have understood that different band pass filters (BPFs 312 and 313) will insert non-zero delays into signals PO_1 or PO_2. And because Peroulas already contemplates inserting delays into the feedback signals, a POSA would have also found it obvious to apply Peroulas' delay insertion technique to time align signals PO_1 and PO_2 (*first feedback signals*) to one another. EX-1003, ¶115.

[5b] perform reconstruction of the complex baseband signals from said sampling.

Because the output of Peroulas' PA 308 is an analog signal at an RF frequency, a POSA would have understood that this signal would be digitized and down converted to baseband to then be used in modeling. EX-1003, ¶¶116-118. Peroulas provides an example where the analog, first-feedback signal is digitized by an ADC after BPF_1 312 and BPF_2 313. EX-1005, 30:10-18 ("The bold dotted line represents the boundary between the digital domain and the analog domain in the multiband pre-distorter…the analog to the digital domain can be implemented by an

A/D converter."). Further, Peroulas includes a two-stage frequency down-conversion architecture to get back to complex baseband using frequency shifters 311 "which shifts the signal down by f_u Hz" (EX-1005, 25:21-22), and 314/315 "which shift the signals down by f_1 and f_2, respectively, to produce signals PO_1 and PO_2, respectively" (EX-1005, 26:6-8; 30:19-29). By filtering, downconverting, and sampling the output of the PA, Peroulas discloses *performing reconstruction of the complex baseband signals from said sampling*. EX-1003, ¶118.

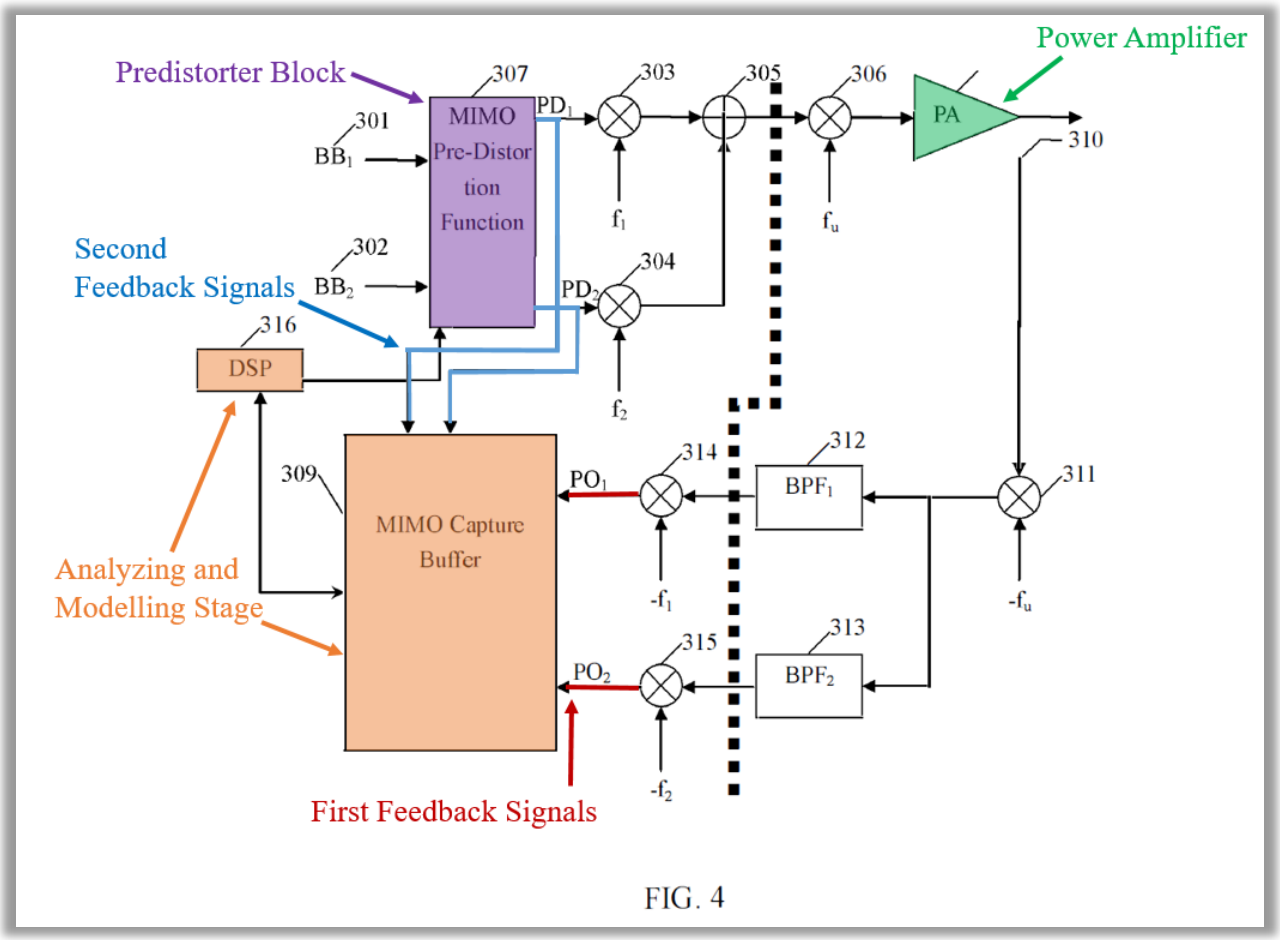

EX-1005, Fig. 4 (Annotated).

Claim 6

[6pre] The linearized transmitter of claim 2,

[6a] said first feedback signals corresponding to a baseband equivalent for all frequency channels and wherein the baseband equivalent signals being extracted from down-converted samples of RF signals output from said power amplifier block.

Peroulas down-converts samples taken from the output of the PA through a two-stage frequency conversion process. EX-1005, 25:17-19. First, "frequency shifter 311 [] shifts the signal down by f_u Hz" (EX-1005, 25:21-22), then the intermediary signals are band-pass filtered by BPF_1 312 and BPF_2 313 (EX-1005, 25:23-24). The signals are next sampled by an ADC at the dashed line in Fig. 4. EX-1005, 30:10-18; EX-1003, ¶¶118-120.

Finally, the signals "are sent into two frequency shifters 314 and 315, which shift the signals down by f_1 and f_2, respectively, [*all frequency channels*] to produce signals PO_1 and PO_2, respectively." EX-1005, 26:6-8. The purpose of the above process is "to obtain captured signals PO_i wherein the center frequency of each frequency shifted signal is zero." EX-1005, 12:6-7. In the context of the claim language, signals PO_1 and PO_2 (*first feedback signals*) correspond to a baseband equivalent for all frequency channels (f_1 and f_2), and they were created by extraction from down-converted samples of the RF signals output from the power amplifier block. EX-1005, 26:6-8; EX-1003, ¶120.

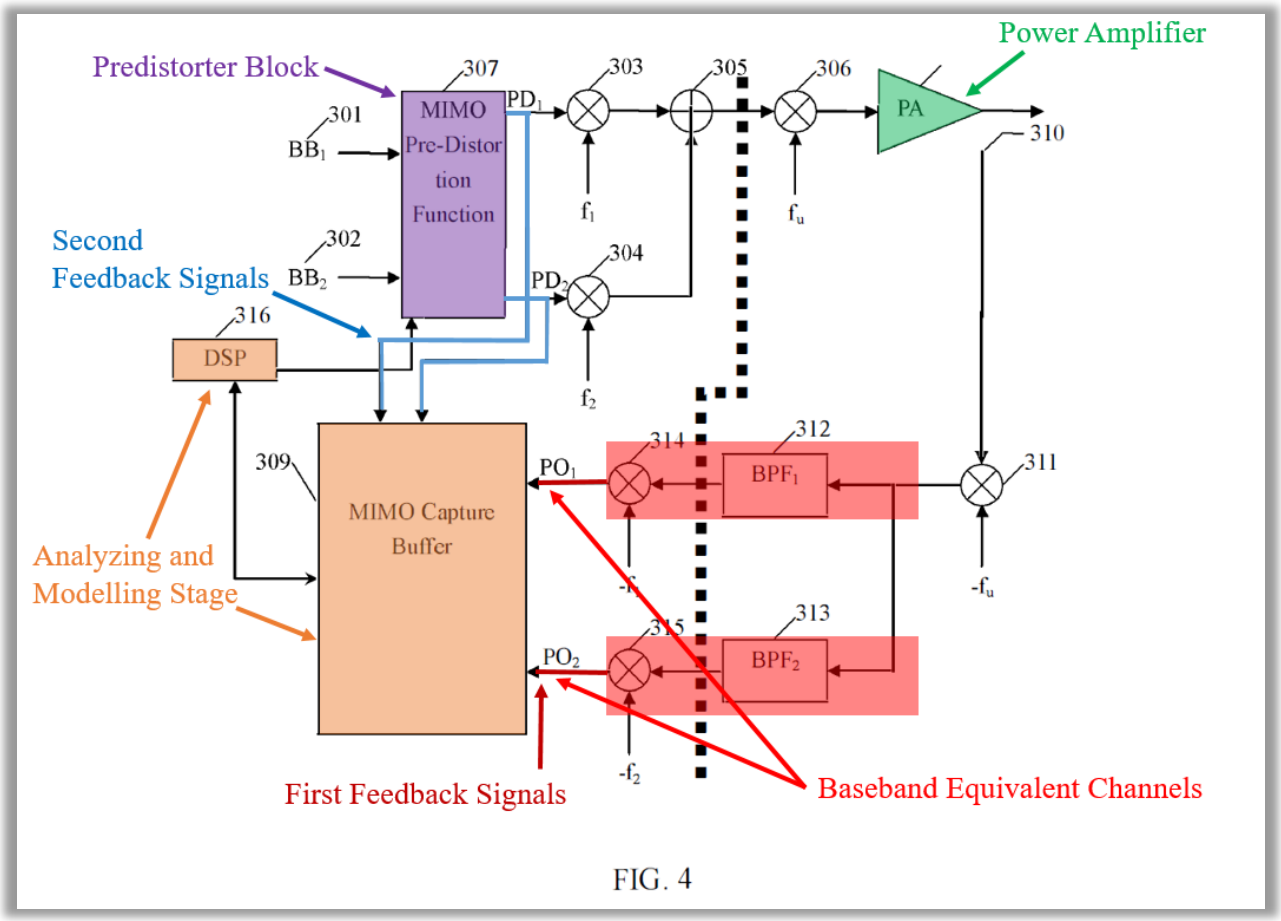

FIG. 4

EX-1005, Fig. 4 (Annotated).

<u>Claim 7</u>

[7pre] The linearized transmitter of claim 2, wherein said signal observation feedback loop further comprises a plurality of channels, each channel comprising:

Peroulas' feedback signals PO_1 and PO_2, which are part of Peroulas' *signal observation feedback loop*, are each inputs into the MIMO Capture Buffer 309, and collectively their paths and associated occupied frequencies comprise a plurality of channels feeding into the MIMO Capture Buffer. EX-1003, ¶121.

[7a] an RF filter; a signal down conversion block; and an analog-to-digital converter (ADC).

To generate baseband feedback signals PO_1 and PO_2, Peroulas' uses an RF filter, a signal down conversion block, and an analog to digital converter (ADC). Specifically, Peroulas' *signal observation feedback loop* (comprising the channels, as explained above) uses band pass filters BPF_1 312 and BPF_2 313 (*RF filter*), frequency shifter 314 at f_1 and frequency shifter 315 at f_2 (*signal down conversion block*), and an ADC (*an analog-to-digital converter (ADC)*) located along the dotted line in Fig. 4. EX-1005, 25:23-24, 26:6-8, 30:12-18 ("[t]he bold dotted line represents the boundary between the digital domain and the analog domain … implemented by an A/D converter."); EX-1003, ¶122.

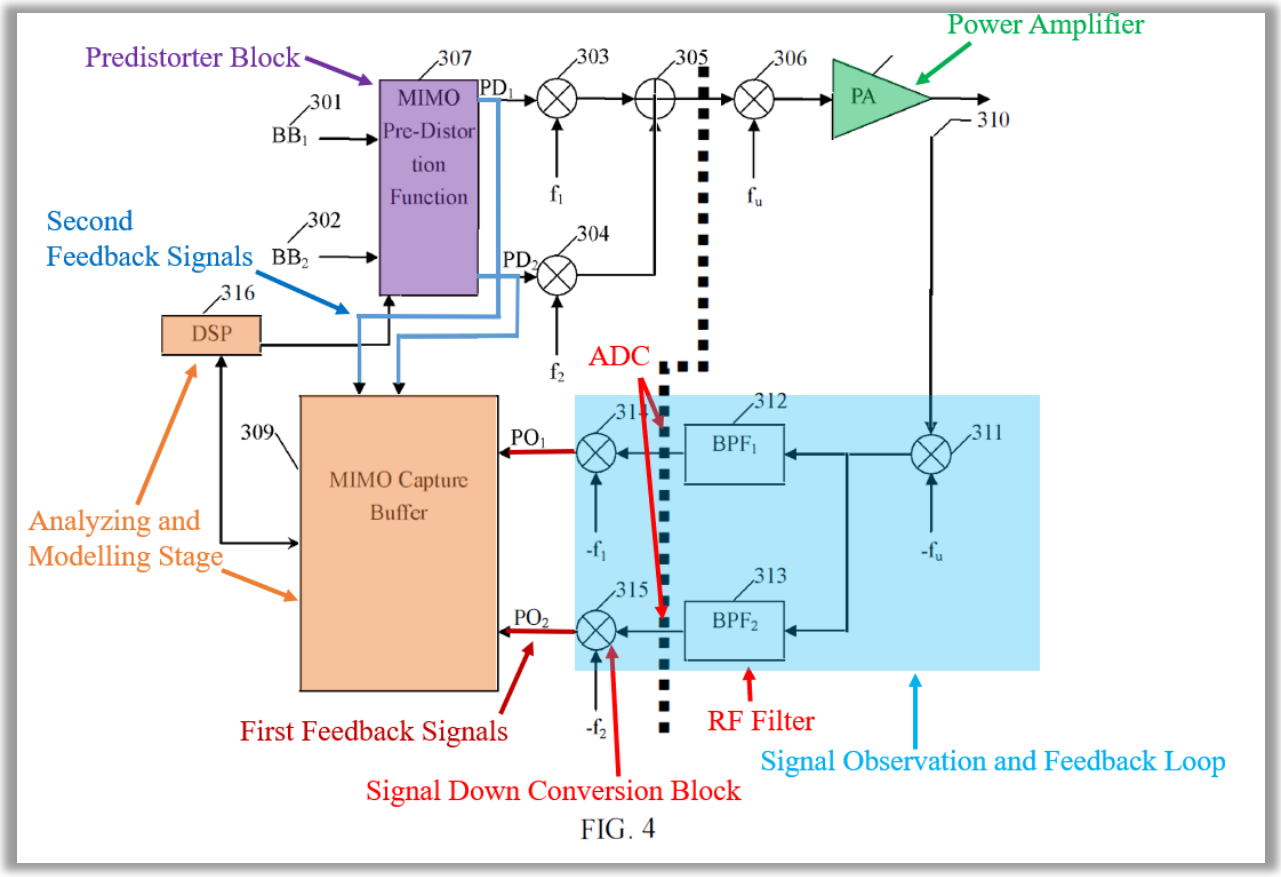

FIG. 4

EX-1005, Fig. 4 (Annotated).

<u>Claim 10</u>

[10pre] A method for linearizing a transmitter, said method comprising:

See limitation [1pre].

[10a] effecting predistortion of concurrent input signals to output concurrent predistorted signals using a digital signal predistorter block including digital baseband signal predistorters;

See limitation [1a].

[10b] amplifying the predistorted signals using a power amplifier block;

See limitation [b].

[10c] receiving in an analyzing and modelling stage first feedback signals taken from an output of the power amplifier, and second feedback signals taken concurrently from the concurrent predistorted signals; and using the first feedback and the second feedback signals in the analyzing and modeling stage to model a nonlinearity in the power amplifier, wherein the digital baseband signal predistorters are updated by the analyzing and modelling stage.

See limitation [1c].

B. Ground 2: Claims 8 and 9 are Obvious Under 35 U.S.C. § 103(a) over Peroulas in View of Cidronali

1. Cidronali

Cidronali discloses a dual-band DPD system "capable of a simultaneous predistortion of a concurrent dual-band power amplifier at both frequency bands." EX-1006, 000001. Cidronali's system uses a digital IF predistortion block (purple) to generate predistorted signals for the PA (green). For its post-PA feedback, Cidronali uses subsampling and a subsampling receiver (blue) in a signal observation and feedback loop (light blue) to sends this information to an Adaptation block (orange).

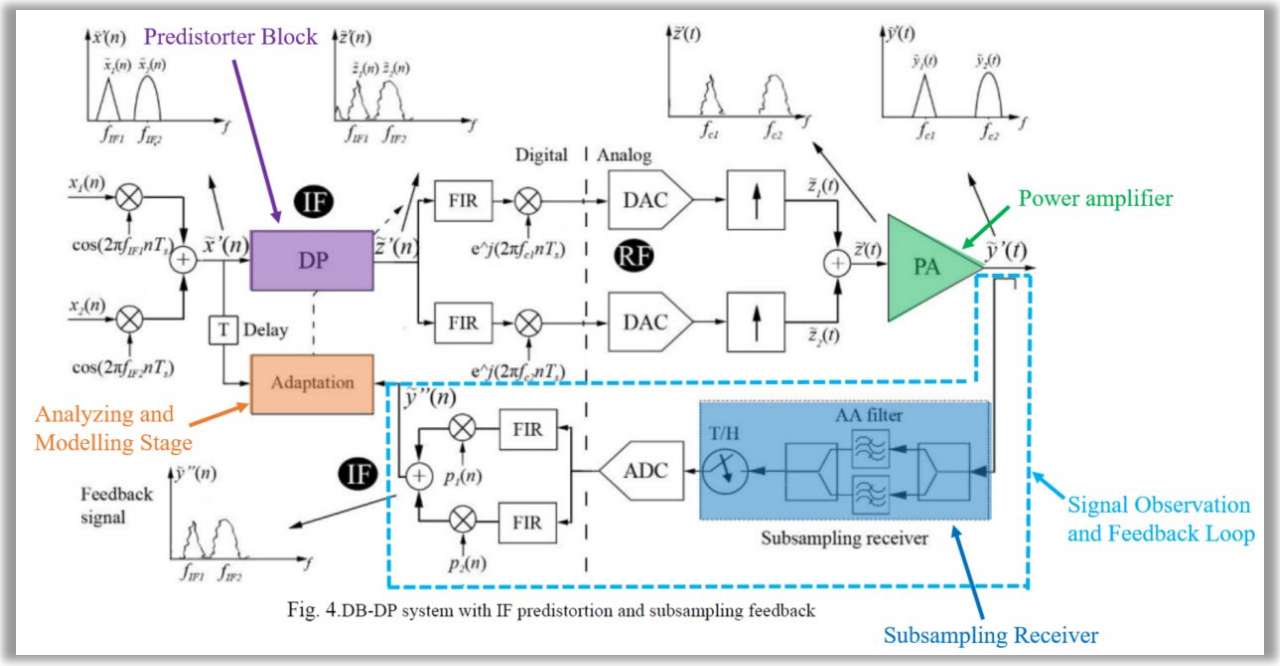

Fig. 4.DB-DP system with IF predistortion and subsampling feedback

EX-1006 Fig. 4 (Annotated). Cidronali's subsampling receiver uses a down-conversion block, filter bank, track and hold block, and ADC sampling according to the widely understood bandpass theorem and subsampling technique. EX-1006, 000002; EX-1003, ¶127.

2. Motivation to Combine the Teachings of Peroulas with the Teachings of Cidronali

As explained previously, Peroulas renders obvious the signal observation feedback loop of Claims 1 and 2. It was also known, as explained in the State of the Art, that the sampling rate of Peroulas' feedback loop would either be configured according to the Nyquist rate, or subsampled at a rate lower than Nyquist. Indeed, Patent Owner admitted during prosecution of the parent patent to the '296 Patent that it "is well known in the art of signal communication that subsampling is the

process of sampling at a frequency less than the Nyquist rate." EX-1015, 6. Cidronali discloses a single subsampling receiver for use with the very same type of predistorter as disclosed in Peroulas, and a POSA would have been motivated to modify the teachings of Peroulas with Cidronali's subsampling teachings for several reasons. EX-1003, ¶¶128-133.

First, a POSA would have been motivated to modify the teachings of Peroulas to subsample for the benefit of reducing the complexity and cost of predistorter implementation. As explained in the State of the Art (*see, e.g.,* EX-1019, 3:65-67) and as recognized by Peroulas (EX-1005, Abstract ("[t]he present invention reduces the implementation cost of a pre-distorter)), there exists a need to reduce the implementation cost of a dual-band transmitter (*id.*, 6:2-5). Cidronali demonstrates that subsampling reduces the number of ADCs thereby minimizing the need for expensive components and reducing cost. EX-1006, 000002. The '296 Patent recognizes this motivation as well, which is nothing more than a restatement of POSA's knowledge. EX-1001, 2:10-12 ("[u]sing Subsampling technique simplifies the feedback loop topology, requires fewer number of RF components, and reduces the power consumption."); EX-1003, ¶129.

Second, for multiband signals, uniform sampling according to the Nyquist rate can be an inefficient method requiring more components to capture the signal, which increases the complexity of the system. EX-1016, 189; §V.A.3 (*supra*). Subsampling

addresses this. EX-1003, ¶122. In fact, Cidronali explains that subsampling and its exemplary subsampling receiver "can be adapted to down-convert two (or more) band-limited signals," making it an ideal choice for multiband implementations. EX-1006, 000002. Thus, a POSA would have been motivated to minimize and simplify Peroulas' feedback path in a manner that is more efficient with the inclusion of subsampling, "allow[ing] [for] extreme flexibility and coherent dual-band down-conversion." EX-1006, 000001; EX-1003, ¶130; *Skedco, Inc. v. Strategic Operations, Inc*., 287 F. Supp. 3d. 1100, 1138 (D. Or. 2018) (when there is "market pressure to solve a problem, ***and there are a finite number of identified, predictable solutions***, a POSA has motivation to 'pursue the known options within his or her technical grasp' and if this leads to anticipated success, it is likely not the product of innovation but of ordinary skill and common sense[.]") (quoting *KSR*, 550 U.S. at 421).

Third, subsampling allows for direct down conversion from the carrier frequency, which results in cost benefits and performance advantages, further motivating a POSA to use subsampling with Peroulas' feedback loop. EX-1006, 000002; EX-1003, ¶131.

Fourth, due to the down conversion in the digital domain, the system can be more easily designed to accommodate a wide range of frequency bands, and the

architecture is more flexible, again motivating a POSA to use subsampling with Peroulas' feedback loop. EX-1006, 000001; EX-1003, ¶132.

Modifying the teachings of Peroulas to include subsampling and, in particular, a single subsampling-based receiver, would have been achieved with a reasonable expectation of success. Peroulas' predistortion technique would fundamentally remain unchanged, the only difference being the mechanics of how the PA's feedback signals are fed into Peroulas' MIMO Capture Buffer. Specifically, a POSA would have simply implemented Peroulas' teaching of bandpass filters and ADCs with Cidronali's teaching of a single subsampling receiver having filters and an ADC. EX-1003, ¶133. This modification would have been simple for a POSA to achieve as it requires only using prior art components according to their established functions. *Id*., ¶133; *KSR*, 550 U.S. at 421.[4]

[4] A POSA would have also understood that Cidronali's subsampling architecture is not limited to the output of an intermediate frequency (or "IF"), as indicated in Cidronali's Fig. 4, but that the frequency shifters disclosed in both Peroulas and Cidronali are equally capable of returning the signal to baseband (as contemplated by Peroulas). EX-1003, ¶133.

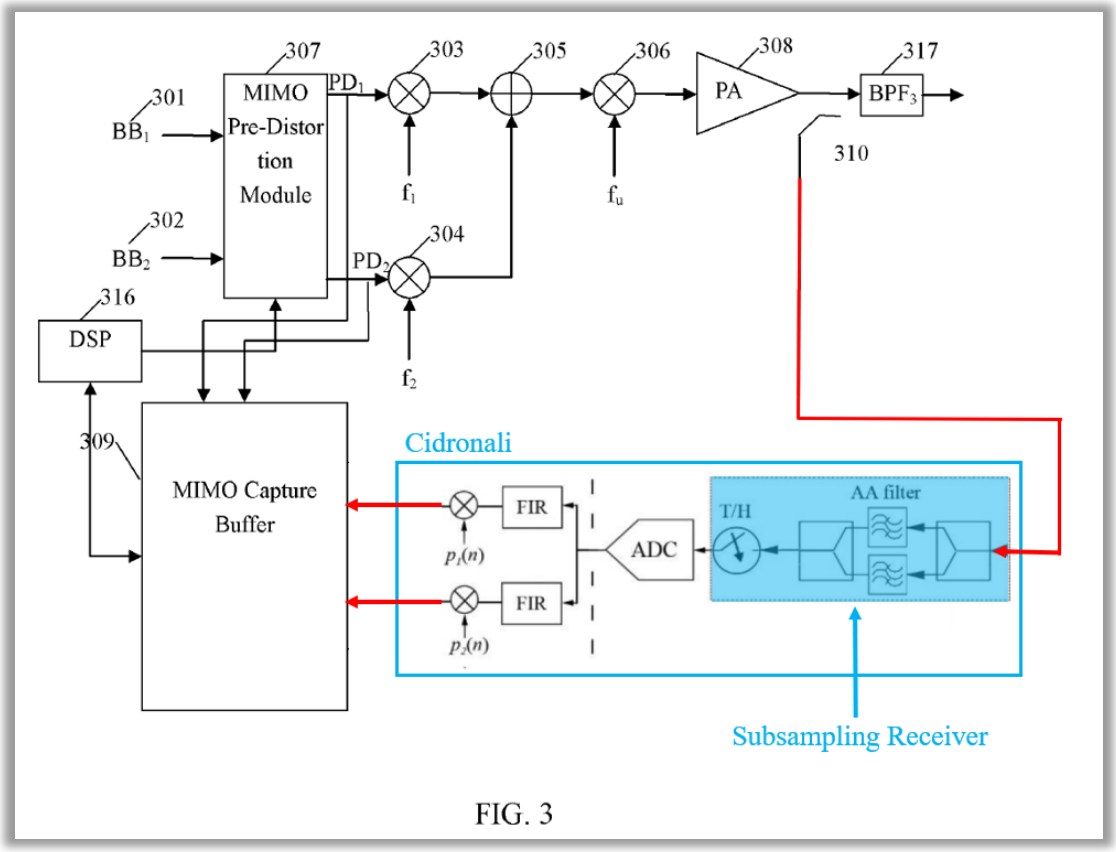

FIG. 3

EX-1005, Fig. 3 (Annotated and Modified in View of EX-1006, Fig. 4).

3. Detailed Application of Peroulas in View of Cidronali

<u>Claim 8</u>

[8pre] The linearized transmitter of claim 2, wherein said signal observation feedback loop further comprises:

[8a] a single subsampling-based receiver to down-convert samples output from said power amplifier block.

As discussed above, it would have been obvious to implement Peroulas' predistortion system using a subsampling-based feedback loop, including the use of *a single subsampling-based receiver to down-convert samples output from said power amplifier block*, as disclosed in Cidronali. Cidronali's subsampling receiver

"allows [for] extreme flexibility and coherent dual-band down-conversion" (EX-1006, 000001), thus cost-effectively down-converting RF samples from Peroulas' transmitter. EX-1003, ¶134.

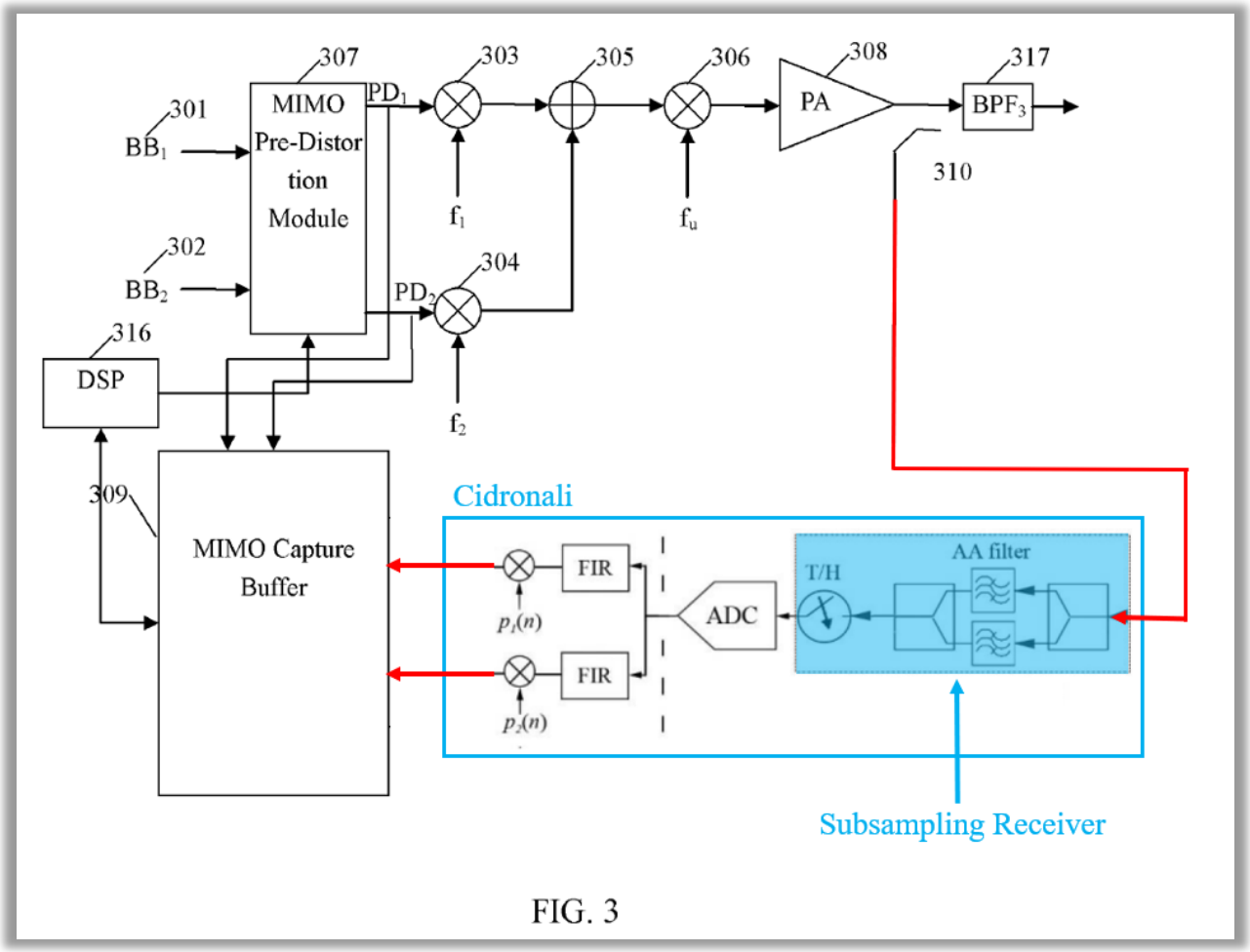

EX-1005, Fig. 3 (Annotated and Modified in View of EX-1006, Fig. 4).

<u>Claim 9</u>

[9pre] The linearized transmitter of claim 8, wherein said single subsampling-based receiver further comprises:

[9a] an RF filter; a track and hold (T&H) block; and an analog-to-digital converter (ADC).

To provide "coherent dual-band down-conversion" (EX-1006, 000001), Cidronali's *single subsampling-based receiver* uses an anti-aliasing/AA filter (*rf filter*), T/H component (*track and hold (T&H) block*), and ADC (*an analog-to-digital converter*) (*id.*, Fig. 4). These commonplace components are further illustrated in the annotated figure below, which a POSA would have immediately understood as corresponding to the claimed components. In other words, Cidronali had to go no further than to provide a figure depicting an AA filter, T/H, and ADC for a POSA to understand the use of the claimed components. EX-1003, ¶135.

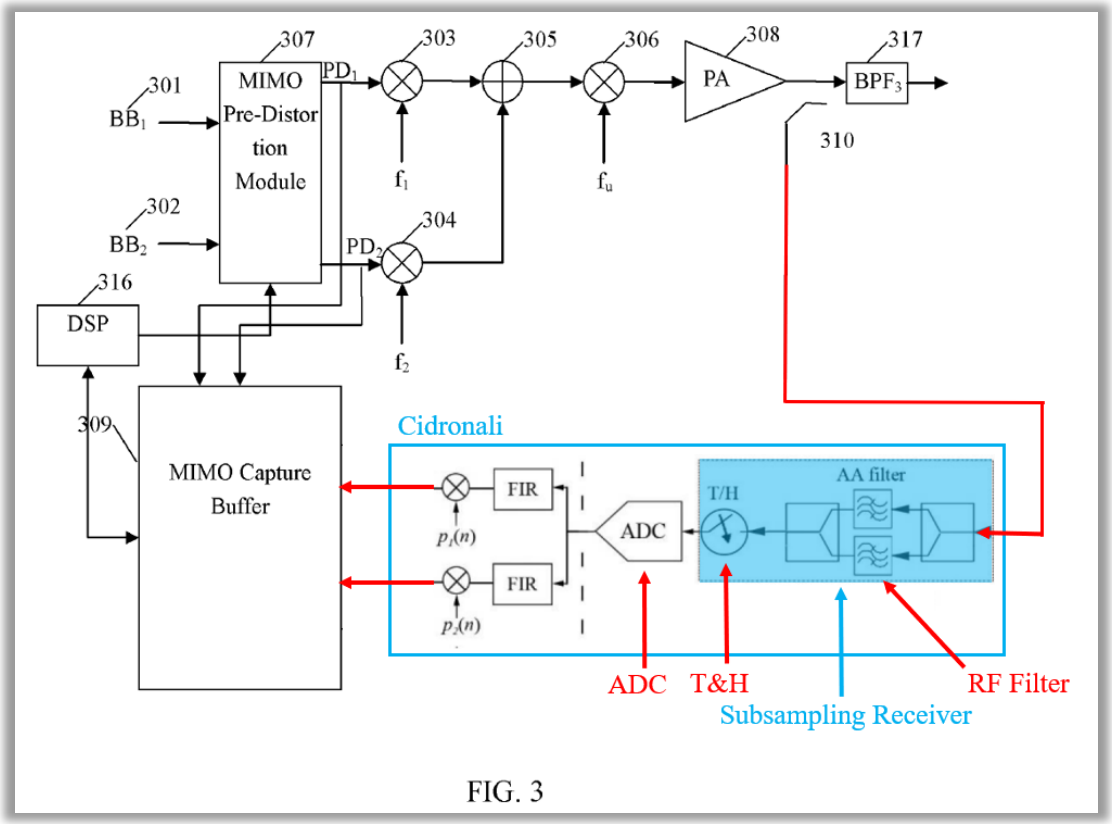

FIG. 3

EX-1005, Fig. 3 (Annotated and Modified in View of EX-1006, Fig. 4).

C. Ground 3: Claim 1-7 and 10 are Obvious Under 35 U.S.C. § 103(a) over Posti

1. Posti

Posti discloses a "multi-frequency carrier transmitter," including a plurality of input signals each corresponding to a channel ("User 1 Data" through "User N Data") and a plurality of digital modulators 106 (purple) to predistort these signals before amplification by PA 122 (green). EX-1009, 2:43-60, 4:66-5:5, 5:13-15, 5:41-42. Posti uses indirect learning to estimate and linearize the distortion introduced by the PA and includes Adaptive Predistorter 108 (orange) that receives signals from

the output of the PA (red) and the output of the digital modulators (blue). EX 1009, 5:50-52, 6:23-32; EX-1003, ¶¶136-138.

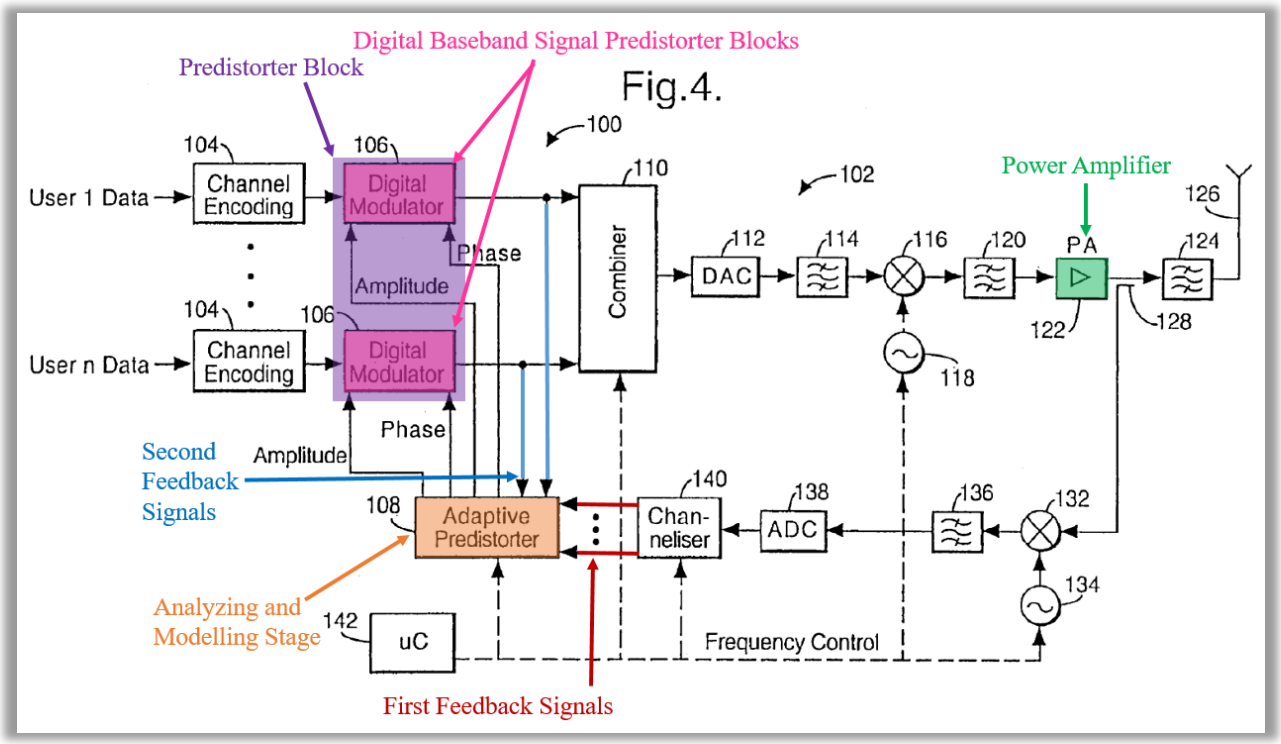

EX-1009, Fig 4 (Annotated).

Posti explains that "embodiments of the present invention can be used with any suitable transmitter which is sending signals at more than one frequency at the same time" (EX-1009, 9:49-52), directly disclosing and suggesting to a POSA that Posti's "multi-frequency carrier transmitter" (*id.*, Abstract) is equally applicable to "multi-band" transmission systems. In other words, a POSA understood Posti's input channels "User 1 Data" through "User n Data" to encompass inputs for the

different frequency channels located in the multiple bands used in a multi-band system. EX-1003, ¶138.

2. Detailed Application to the Challenged Claims

<u>Claim 1</u>

[1pre] A linearized transmitter comprising:

To the extent that the preamble is limiting, Posti discloses a multi-frequency carrier transmitter (depicted in Fig. 4) using predistortion to "solve[] or at least mitigate[] the problems caused by a nonlinear amplifier." EX-1009, 2:40-42; EX-1003, ¶139.

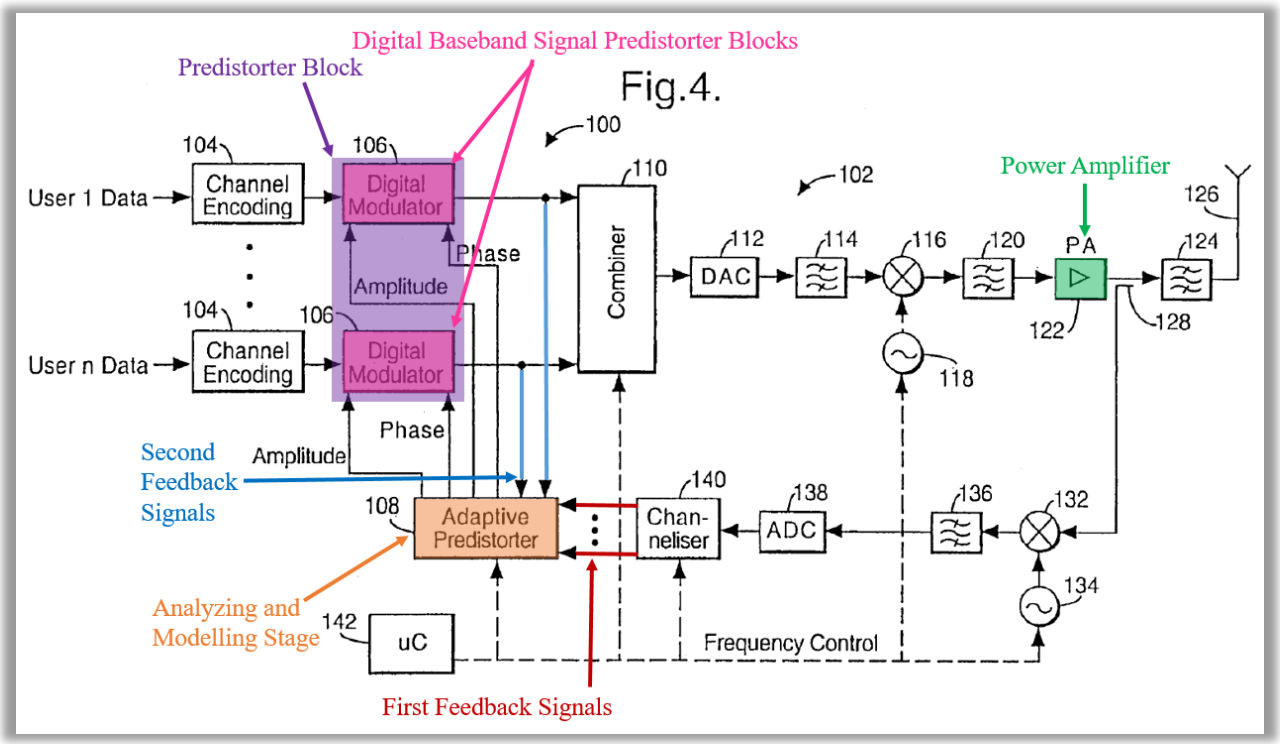

EX-1009, Fig. 4 (Annotated).

[1a] a digital signal predistorter block including digital baseband signal predistorters effecting predistortion of concurrent input signals to output concurrent predistorted signals;

Posti discloses a plurality of digital modulators 106 (pink), shown above, which correspond to a respective channel in Posti's transmitter system and are the claimed *digital baseband signal predistorters* within a *digital signal predistorter block.* EX-1009, 4:49-51; EX-1003, ¶¶140-144.

The digital modulators 106 receive baseband input signals, represented in Posti's figures as "User n Data" (*concurrent input signals*), to be transmitted on particular frequencies from the output of the channel encoding block 104. EX-1009, 4:35-41, 4:43-44 ("As mentioned hereinbefore, each channel is on a different frequency after the modulator."). The digital modulators are arranged to "modulate the output of the respective channel encoders 104 according to the modulation method use by the telecommunications system," (*id.*, 4:61-64), "pass that input through a shaping filter and mix the signal with a carrier signal at an intermediate frequency," (*id.*, 4:61-64), and "[apply] predistortion to compensate for the phase and amplitude distortion introduced by the amplifier 122" (*id.*, 5:6-7). The output of digital modulators 106 results in *concurrent predistorted signals*, as shown in the figure below. EX-1003, ¶142.

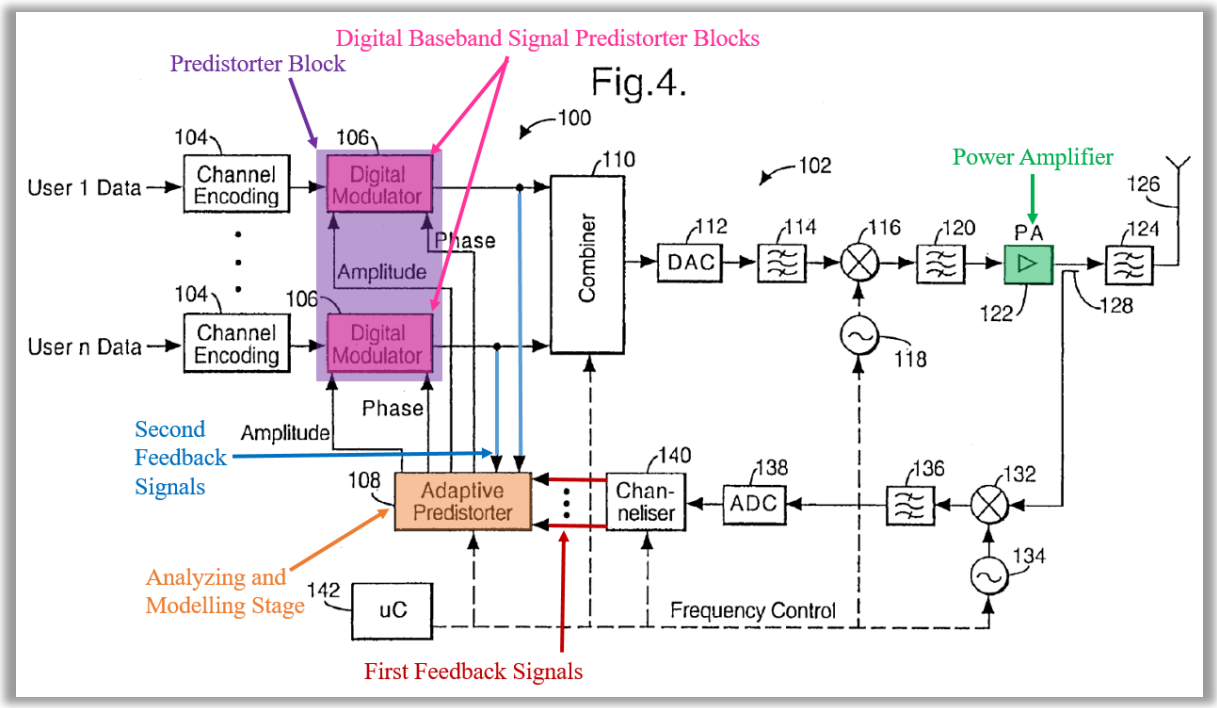

EX-1009, Fig. 4 (Annotated).

Moreover, Posti explains that "predistortion can be performed during or more preferably after the modulation has been carried out by the modulator" (EX-1009, 5:6-10; *see also id.*, 5:2-5), meaning that Posti's digital modulators can either predistort at baseband frequency—by using, for example, sequential steps for modulation, predistortion, and then upconversion—or at an intermediary frequency after upconversion has occurred (EX-1003, ¶143). Either way, Posti's digital modulators are the claimed *digital baseband signal predistorters effecting predistortion of concurrent input signals to output concurrent predistorted signal* because they take incoming concurrent baseband signals and predistort those signals to output concurrent predistorted signals. EX-1003, ¶¶143-144.

[1b] a power amplifier block connected to amplify the predistorted signals; and

Posti's discloses a PA 122 (green), which "amplifies the received input," and also a signal combiner 110 to "combine the outputs of all of the modulators 106 to provide a single output." EX-1009, 5:41-42, 5:13-14. In this way, Posti's disclosure is consistent with the disclosure of the '296 Patent that describes "an RF power amplification block, the RF power amplification block including the concurrent multi-band power amplifier; and an RF power combining network." EX-1001, 2:39-41. Thus, the claimed "block" can include the transmitter's PA and other associated components, which is disclosed in Posti. EX-1003, ¶145.

[1c] an analyzing and modelling stage receiving first feedback signals taken from an output of the power amplifier, and second feedback signals taken concurrently from the concurrent predistorted signals and using the first feedback and the second feedback signals in the analyzing and modelling stage to model a nonlinearity in the power amplifier, wherein the digital baseband signal predistorters are updated by the analyzing and modelling stage.

Posti uses an indirect learning architecture where adaptive predistorter 108 (*analyzing and modeling stage*) (orange) calculates new predistortion coefficients by comparing feedback signals generated from the output of the PA via channeliser 140 (*first feedback signals*) (red) and concurrent predistorted signals output from the digital modulators 106 (*second feedback signals*) (blue). EX-1009, 5:11-12, 6:19-22. Posti explains that the adaptive predistorter 108 receives "for each channel a version of the signal before it passes through the combiner 110 and subsequent

elements of transmit part 102 of the base station 100 (from the respective digital modulator) and a version of the signal after it has passed through the transmit part 102 (from the channelizer 140)." EX-1009, 6:23-28; EX-1003, ¶¶146-151.

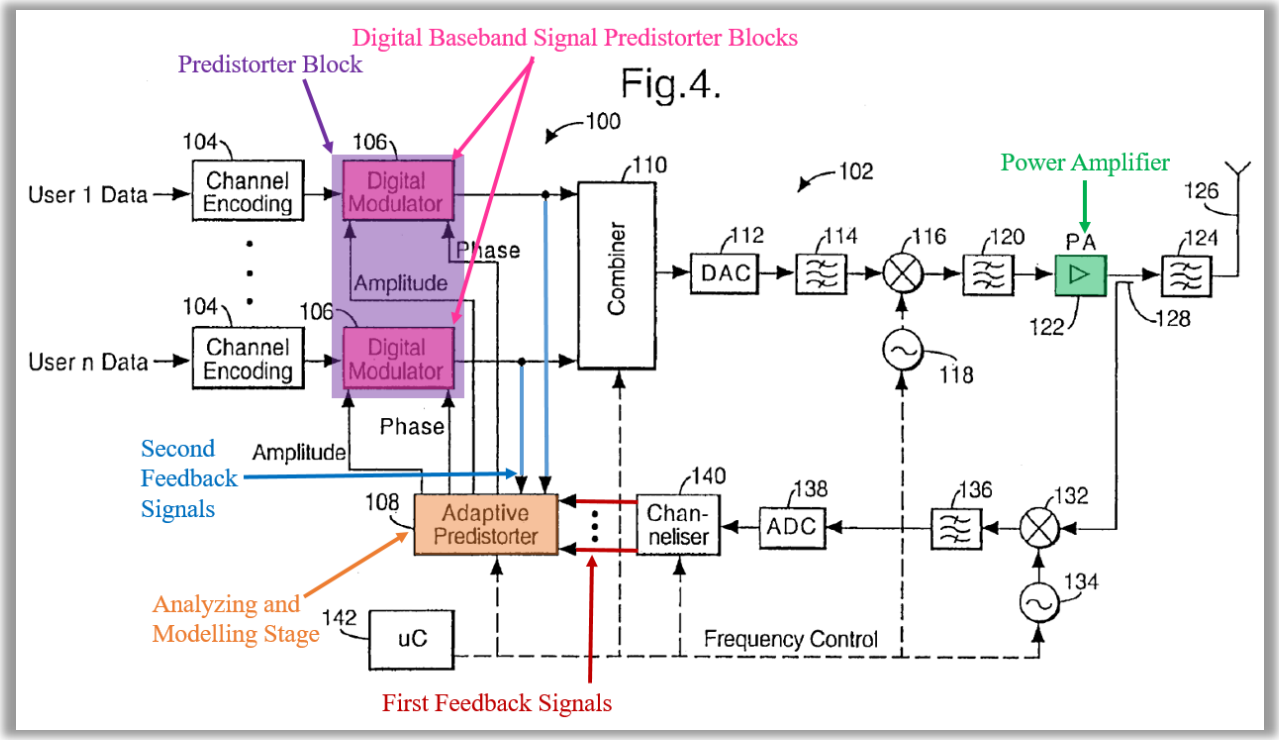

EX-1009, Fig. 4 (Annotated).

Fig. 7, shows an enhanced view of the adaptive predistorter 108:

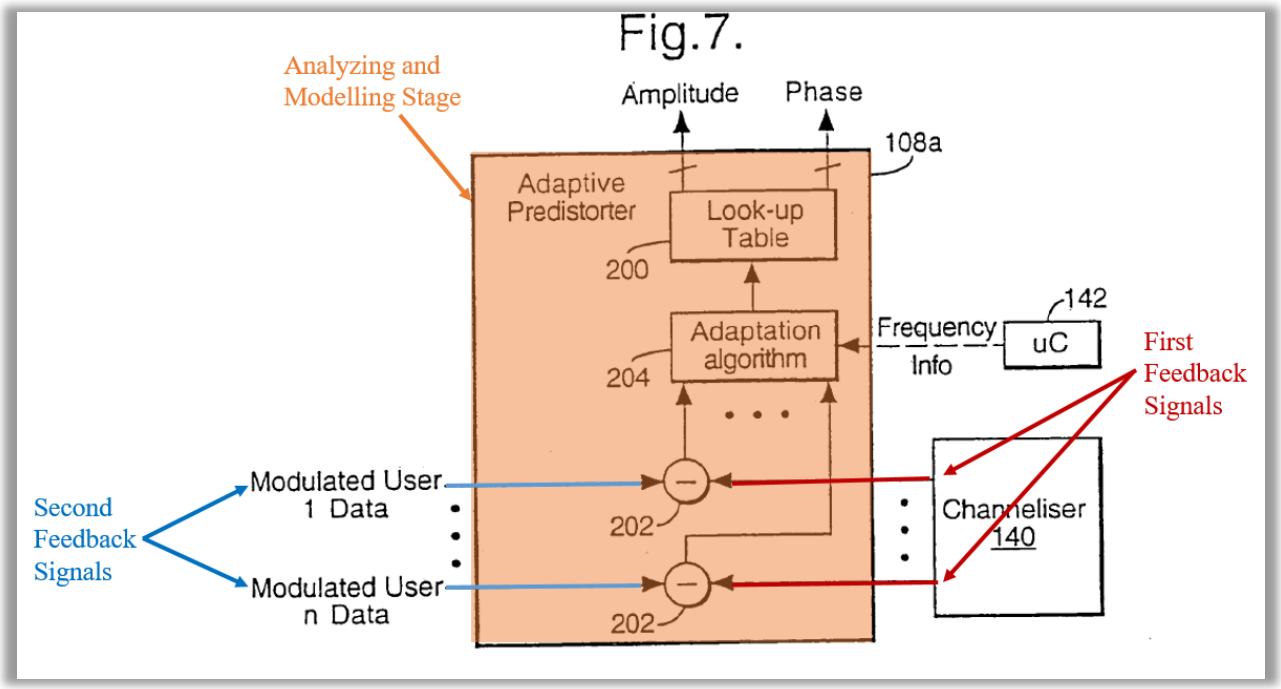

EX-1009, Fig. 7 (Annotated); EX-1003, ¶¶147-148. The signals output from the channeliser 140 (*first feedback signals*) (red) and concurrent predistorted signals output from the digital modulators 106 (*second feedback signals*) (blue) are applied to the adaptation algorithm 204:

> The predistortor 108a comprises n subtracters 202 each of which receives a respective one of the outputs from the digital modulators 106. Each subtracter also receives a input from the channeliser 140. Each subtracter 202 receives the output from the modulator 106 corresponding to a given user and the output from the channeliser 140 which also corresponds to that user. The subtracter 202 subtracts one of the outputs from the other to thus determine the difference between those signals. The output of each subtracter 202 thus constitutes a difference signal which is input to an adaption algorithm block 204

> which on the basis of the input received from the subtractor 202 calculates, if necessary, new amplitude and phase predistortion coefficients.

EX-1009, 7:12-24.

So that the subtractors 202 can determine the difference signal between Posti's first and second feedback signals, a POSA understood, as shown in Figs. 4 and 7, for example, that Posti's second feedback signals are provided to the adaptive predistorter concurrently. EX-1003, ¶149. To the extent Patent Owner argues that Posti does not expressly state that second feedback signals are provided concurrently, a POSA would have been motivated to do so in order to, at a minimum, allow for concurrent processing across bands and the concurrent updating of each of Posti's digital modulators. *Id*.

Posti's adaptation algorithm 204 then calculates the amplitude and phase coefficients to "compensate for non-linearity with respect to amplitude and also phase distortion." EX-1009, 4:51-59, 6:49-56. The amplitude and phase coefficients are output to look-up table 200 where they are stored (*id.*, 7:21-26), and then "supplied, as shown in FIG. 4, to the respective digital modulators 106 (*id.*, 7:26-28). In this way, Posti's adaptive predistorter 108 (*analyzing and modeling stage*) models the power amplifier's nonlinearity (*using the first feedback and the second feedback signals in the analyzing and modeling stage to model a nonlinearity in the*

power amplifier) and then updates Posti's digital modulators 106 (*wherein the digital baseband signal predistorters are updated by the analyzing and modeling stage*). EX-1003, ¶¶150-151.

Claim 1 is rendered obvious in view of Posti. *Activision Blizzard*, 926 F.3d at 1381.

Claim 2

[2pre] The linearized transmitter of claim 1, wherein said concurrent digital multi-band predistortion block further comprises:

Posti explains that its teachings are suitable for any transmitter that sends "signals at more than one frequency at the same time" (EX-1009, 9:49-52), which is true of multi-band transmitters, meaning that a POSA understood Posti's input signals "User 1 Data" through "User n Data" to encompass inputs for the different frequency channels used in a multi-band system. EX-1003, ¶152. In other words, and in the context of a single PA that can transmit signals located in different frequency bands, a POSA understood that Posti's plurality of digital modulators 106 would apply predistortion across a first channel within a first band, and a second channel within a second band. EX-1003, ¶152.

[2a] a plurality of the digital baseband signal predistorters each corresponding to a respective channel;

Posti discloses that "base station 100 comprises N channel encoders 104 where N is the number of different frequencies on which the base station 100 will

transmit signals" and that each channel encoder 104 "receives the data to be transmitted on the particular frequency associated with the given channel encoder 104." EX-1009, 4:35-41; 4:43-44 ("As mentioned hereinbefore, each channel is on a different frequency after the modulator."). Each channel encoder 104 outputs a signal corresponding to that respective channel to be "input to a respective digital modulator 106." EX-1009, 4:48-49. The connection from each channel encoder 104 to a digital modulator 106 demonstrates that each digital modulator 106 (*digital baseband signal predistorters*) corresponds *to a respective channel*, and thus Posti discloses *a plurality of the digital baseband signal predistorters each corresponding to a respective channel.* EX-1003, ¶153.

[2b] and a signal observation feedback loop for generating said first feedback signals.

As explained previously, Posti's adaptive predistorter 108 (*analyzing and modeling stage*) receives, *inter alia*, signals output from the channeliser 140 (*first feedback signals*). EX-1009, 5:11-12, 6:19-20. Before those feedback signals are passed from the channeliser 140 to the adaptive predistorter 108 (*analyzing and modeling stage*), the feedback first passes through coupler 128, mixer 132, band pass filter 136, and ADC 138, which taken together with the channeliser 140 comprise a *signal observation feedback loop*. EX-1009, 5:50-6:16; EX-1003, ¶154.

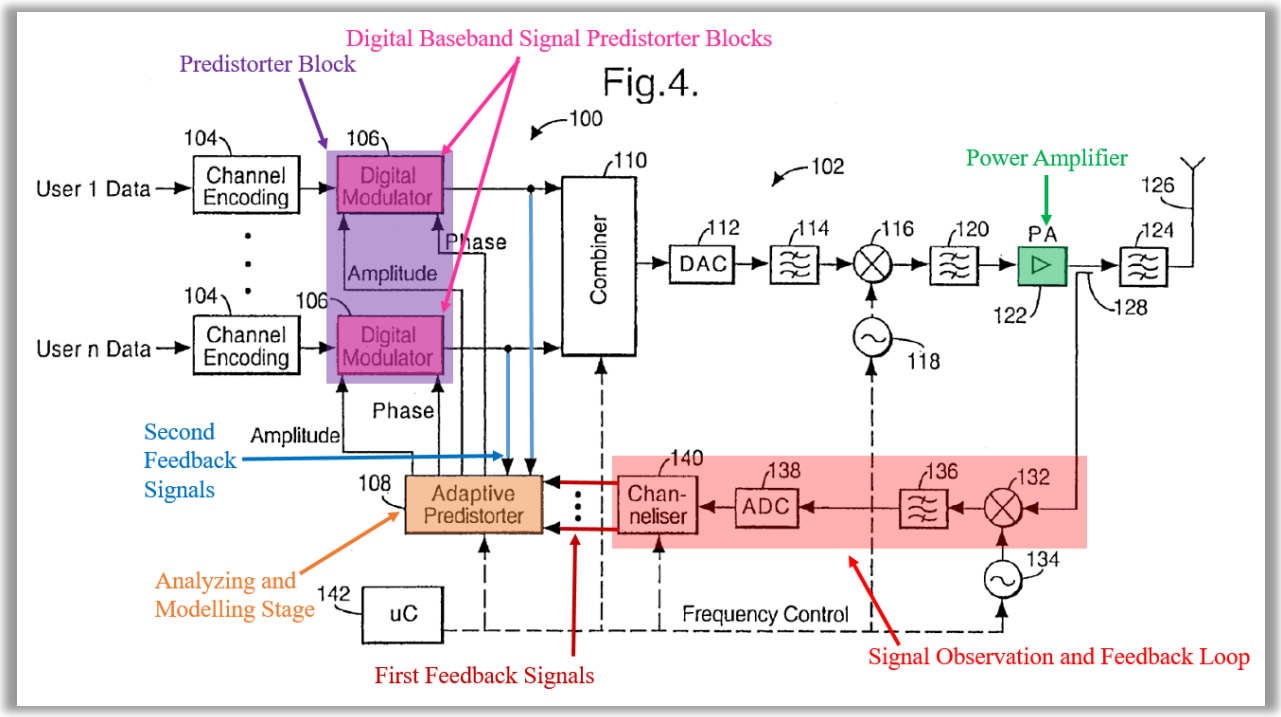

EX-1009, Fig. 4 (Annotated).

<u>Claim 3</u>

[3pre] The linearized transmitter of claim 2, wherein said plurality of digital baseband signal predistorters further comprises:

[3a] a plurality of inputs, each input corresponding to a single frequency channel; and

Posti's transmitter (or base station 100) uses a plurality of digital modulators 106 (said *digital baseband signal predistorters*) (*see, e.g.,* EX-1009, 4:49-51), which receive input signals from N channel encoders where "***each channel encoder 104*** receives the data to be transmitted on the particular frequency associated with the given channel encoder 104" (EX-1009, 4:38-40 (emphasis added)). Posti similarly explains that the transmit portion 102 of the base station 100 "comprises N channel

encoders 104 where ***N is the number of different frequencies on which the base station 100 will transmit signals***." EX-1009, 4:35-38 (emphasis added). In other words, each "user data" input in Posti's transmitter corresponds to *a single frequency channel*. EX-1003, ¶155. And taken together, Posti's plurality of digital modulators 106 (*plurality of digital baseband signal predistorters*) receive a plurality of inputs with *each input corresponding to a single frequency channel* (*i.e.,* the "N" number of different frequencies on which the base station 100 will transmit signals). *Id*.

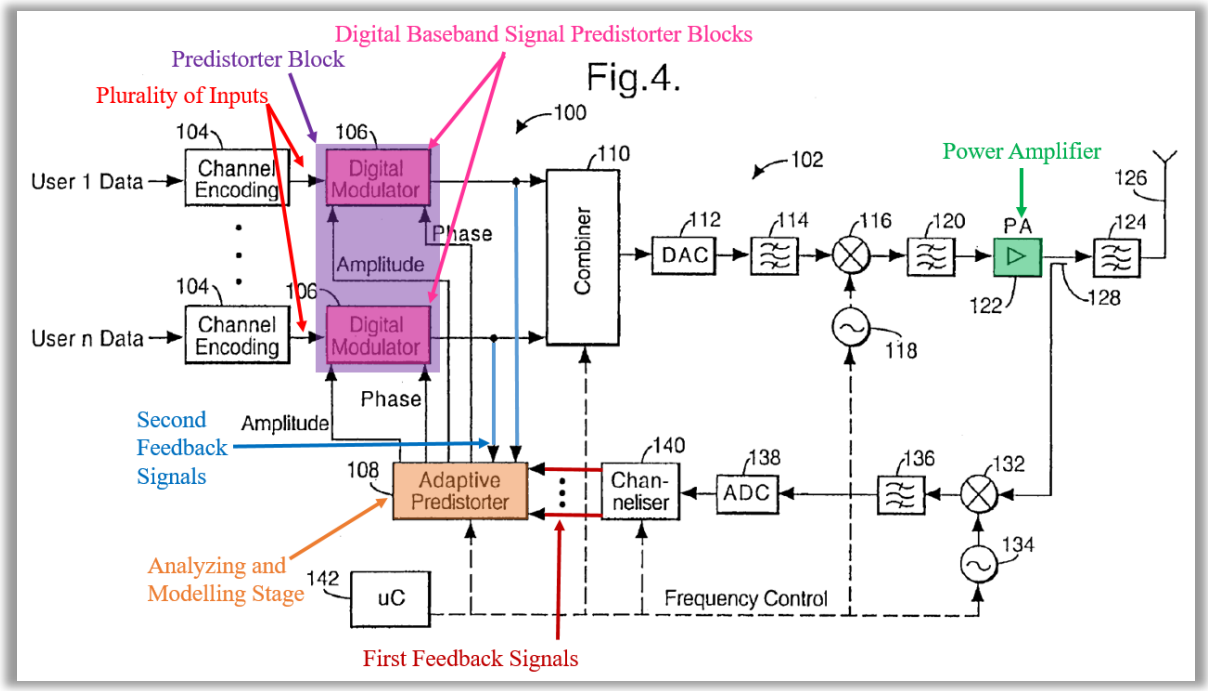

EX-1009, Fig. 4 (Annotated).

In this way, Posti's predistorter includes an equal number of digital modulators to the number of bands of the multi-band transmitter, with each input corresponding to a single frequence channel. For example, in a dual-band

implementation, Posti's multi-frequency transmitter would receive user data 1 and user data 2, each corresponding to a single frequency channel to be transmitted at respective frequencies in band 1 and band 2. EX-1003, ¶156. Further, because "each of the individual channels are input to the adaptive predistorter on the input side and the individual channels are received from a channeliser on the output side," Posti's predistortion coefficient are "calculated by the adaptive predistorter [] based on all of the carriers, [which] allows [for] optimal performance to be obtained since all the information is available." EX-1009, 6:63-7:3. Tellingly, this is no different than the '296 Patent's explanation that the "predistorted inputs, X_{pd1} and X_{pd2}, 115 as well as the output of each band of the PA, y_1 and y_2, 160 are used to generate the predistorter signal processing model 110." EX-1001, 4:2-5; EX-1003, ¶157.

[3b] a plurality of outputs, each output corresponding to a single frequency channel, and each output connected to an input of a concurrent multi-band transmitter.

Posti's plurality of digital modulators 106 (*plurality of digital baseband signal predistorters*) each output a signal on a single frequency channel (as explained for limitation [3a]) to frequency combiner 110, and thus disclose a *plurality of outputs, each output corresponding to a single frequency channel*. EX-1009, 4:49-51, 5:11-12 ("The output of each of the digital modulators 106 are input to a signal combiner 11…"). The combiner 110 then provides a composite signal to first band pass filter

114, mixer 116, second band pass filter 120, PA 122, third band pass filter 124, and antenna 126. EX-1009, 5:22-25, 5:25-26, 5:37-40, 5:41-49; EX-1003, ¶¶158-160.

This limitation also requires "each output connected to an input of a concurrent multi-band transmitter." The specification explains that "$X_{pd1}(n)$ and $X_{pd2}(n)$ are the predistorted signals to the input of the dual-band transmitter" (EX-1001, 4:19-21), thus Claim 3 identifies the components following predistortion as the "concurrent multi-band transmitter." As shown in the figure below and as explained above, each output from Posti's digital modulators is *connected to an input of a concurrent multi-band transmitter* at combiner 110. EX-1003, ¶159.

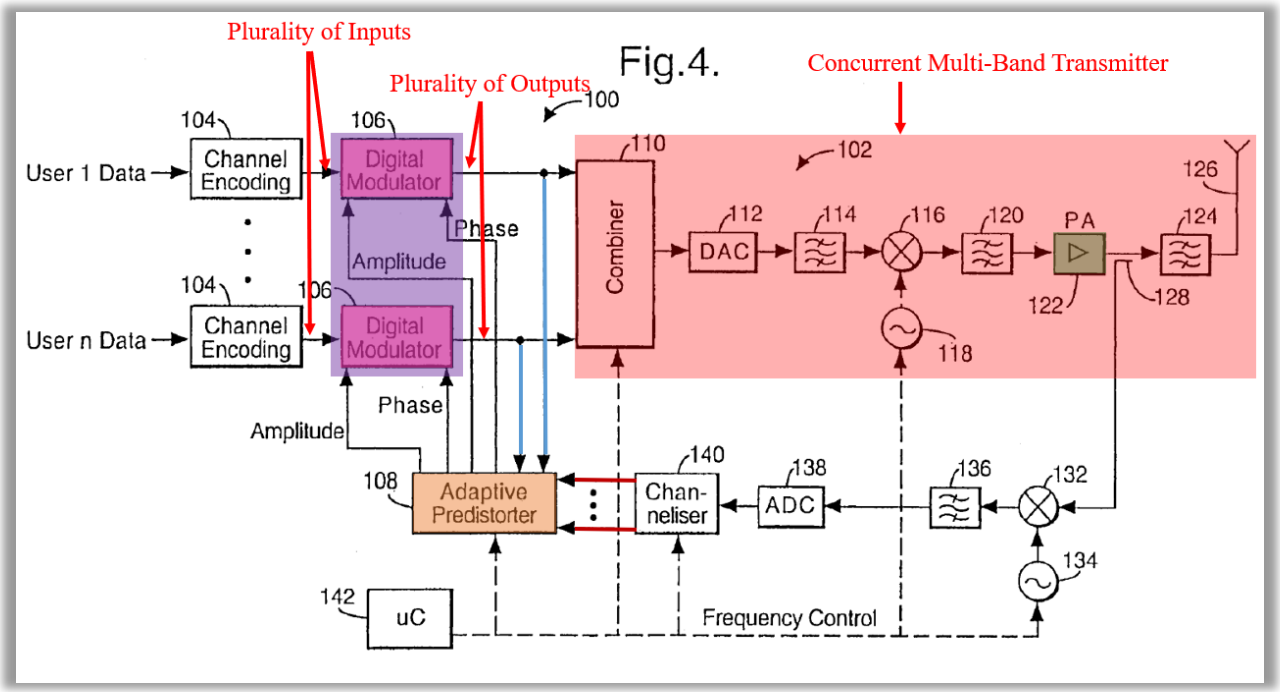

EX-1009, Fig. 4 (Annotated).

Further, a POSA would have also understood the above processing chain (*i.e.*, signal combiner 110, first band pass filter 114, mixer 116, second band pass filter 120, power amplifier 122, and third band pass filter 124) to constitute a *concurrent multi-band transmitter* because "N" different frequencies are being transmitted by antenna 126. And as previously discussed, a POSA understood that Posti's teaching are equally applicable to a transmitter configured to predistort and transmit across multiple channels in multiple bands. EX-1003, ¶160.

Claim 4

[4pre] The linearized transmitter of claim 2, wherein said analyzing and modeling stage further comprises:

[4a] a plurality of outputs connected to update the parameters of said digital baseband signal predistorters; and

Posti uses adaptive algorithm block 204 within adaptive predistorter 108 (*analyzing and modeling stage* (orange)) to calculate, and store, new amplitude and phase coefficients, and ultimately provide those updated predistortion coefficients to each respective digital modulator. *See, e.g.,* EX-1009, 4:51-60, 6:40-56, 7:20-28. "Each digital modulator 106 [] receives two outputs from the adaptive predistorter 108" (pink) via direct path for the amplitude and phase coefficients. EX-1009, 4:49-51. Thus, Posti's analyzing and modeling stage has *a plurality of outputs connected to update the parameters of a digital baseband signal predistorter*. EX-1003, ¶¶161-162.

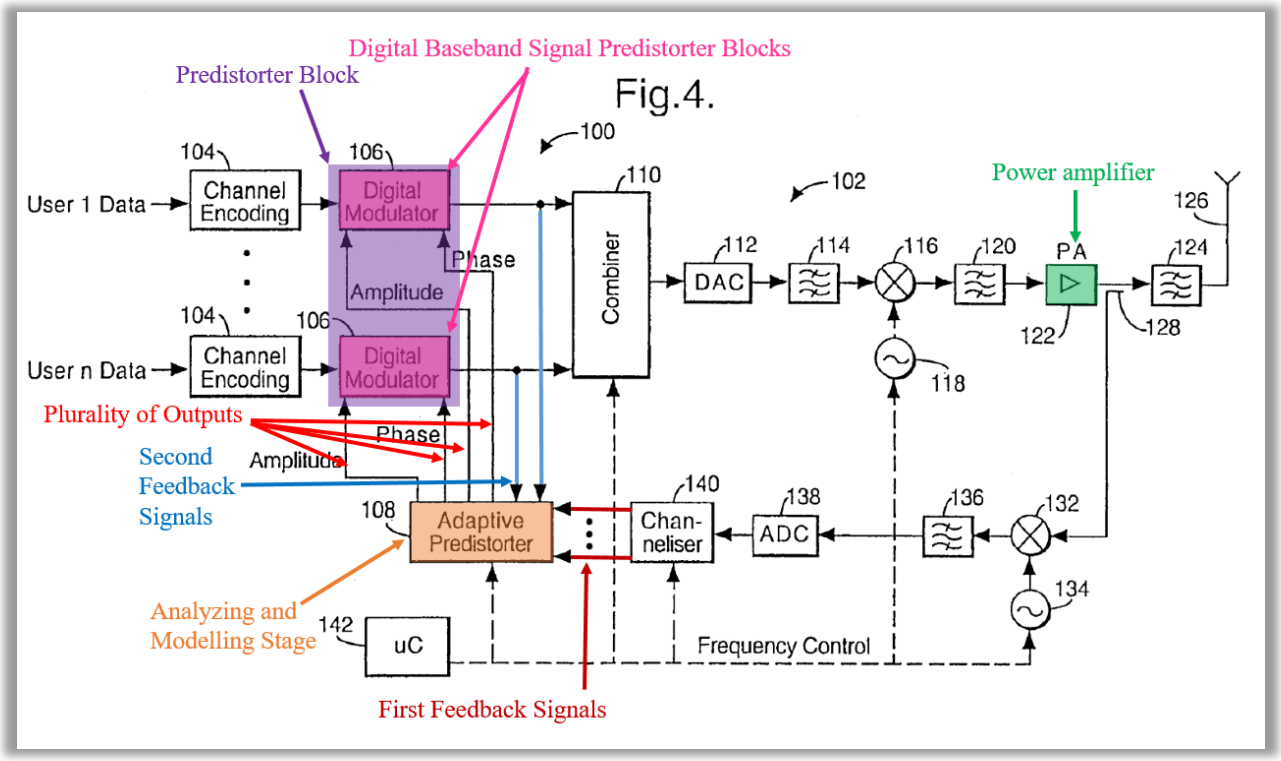

EX-1009, Fig. 4 (Annotated).

[4b] a plurality of inputs connected to both: (a) outputs of said signal observation feedback loop comprising said first feedback signals, and (b) to outputs of said digital signal predistorter block.

Posti's adaptive predistorter 108 (*analyzing and modeling stage*) receives signals output from the channeliser 140 (*first feedback signals*), and therefore has a *plurality of inputs connected to the outputs of the signal observation feedback loop*. The adaptive predistorter 108 also receives signals output from the digital modulators 106 (*second feedback signals*), and therefore has a *plurality of inputs connected to the outputs of the digital signal predistorter block.* EX-1009, 5:11-12, 6:13-28; EX-1003, ¶163. More specifically, Posti explains that "each of the

individual channels are input to the adaptive predistorter on the input side and the individual channels are received from a channeliser on the output side," such that Posti's predistortion coefficient are "calculated by the adaptive predistorter [] based on all of the carriers, [which] allows [for] optimal performance to be obtained since all the information is available." EX-1009, 6:63-7:3; EX-1003, ¶164.

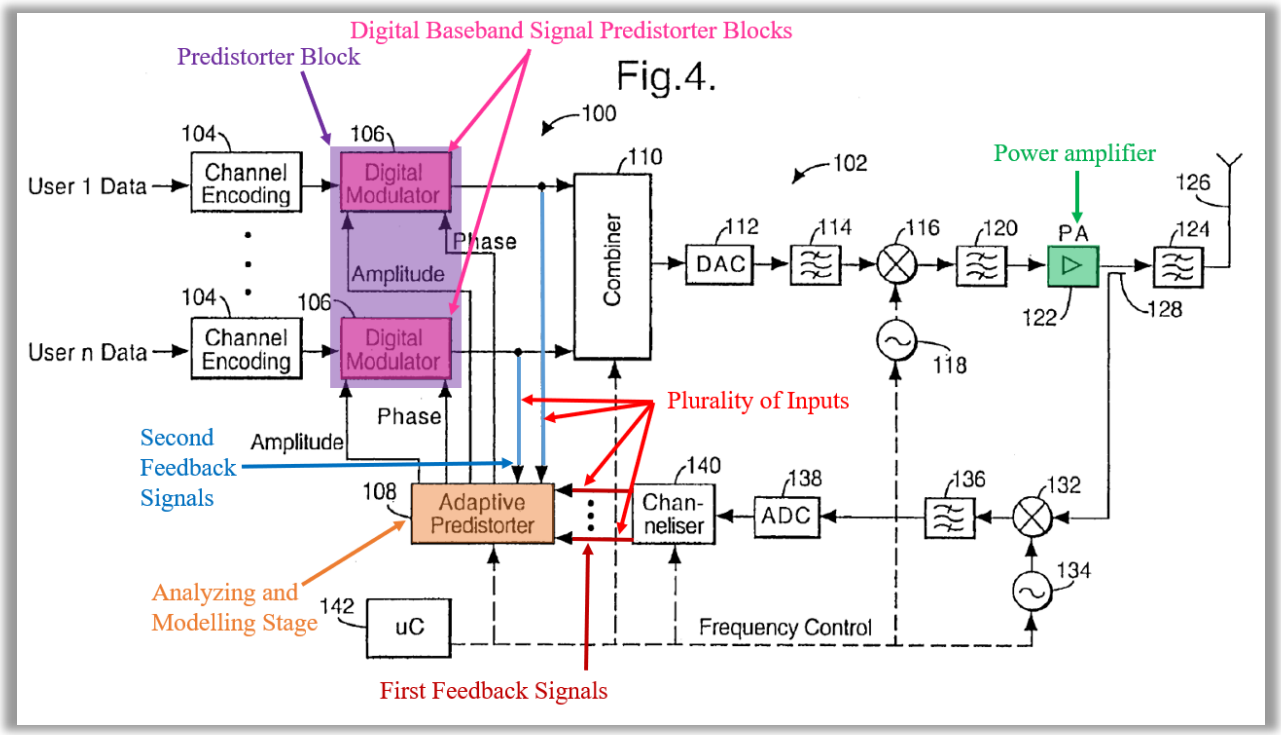

EX-1009, Fig. 4 (Annotated).

<u>Claim 5</u>

[5pre] The linearized transmitter of claim 2, wherein said analyzing and modeling stage is further adapted to:

[5a] perform time alignment of complex baseband[5] signals from sampling said first feedback signals; and

Posti's adaptive predistorter 108 (*analyzing and modeling stage*) includes "n" subtractors 202 "each of which receives a respective one of the outputs from the digital modulators 106 [and each] subtracter also receives a input from the channeliser 140. EX-1009, 7:12-16. The subtractors create a composite signal that is supplied to adaptation algorithm 204 for calculation of amplitude and phase coefficients (EX-1009, 6:31-40), and all of this is coordinated timewise so that the adaptive predistorter 108 is comparing "like versions of the same signal." EX-1009, 6:29-31; EX-1003, ¶¶165-167.

Posti's comparison of "like versions of the same signal" (EX-109, 6:29-31) means that Posti's adaptive predistorter performs *time alignment of the signals*. EX-1003, ¶166. To implement this, Posti explains that the channelizer is "provided in any suitable way" (EX-1009, 6:21-22), and a POSA understood that one well-understood and routine way to implement time alignment is to insert a delay block after the channeliser 140 to time align the signals. EX-1003, ¶166. To the extent

[5] Posti's use of complex baseband signals is addressed in element 5[b].

Patent Owner asserts that Posti does not expressly state that Posti's analyzing and modeling stage is configured to perform time alignment, a POSA would have understood and been motivated in view of Posti's instruction to compare "like versions of the same signal" (EX-1009, 6:29-31) to implement the teachings of Posti with a delay block after channeliser 140 to ensure that the composite signal supplied to adaptation algorithm 204 is, in fact, time aligned (EX-1003, ¶167).

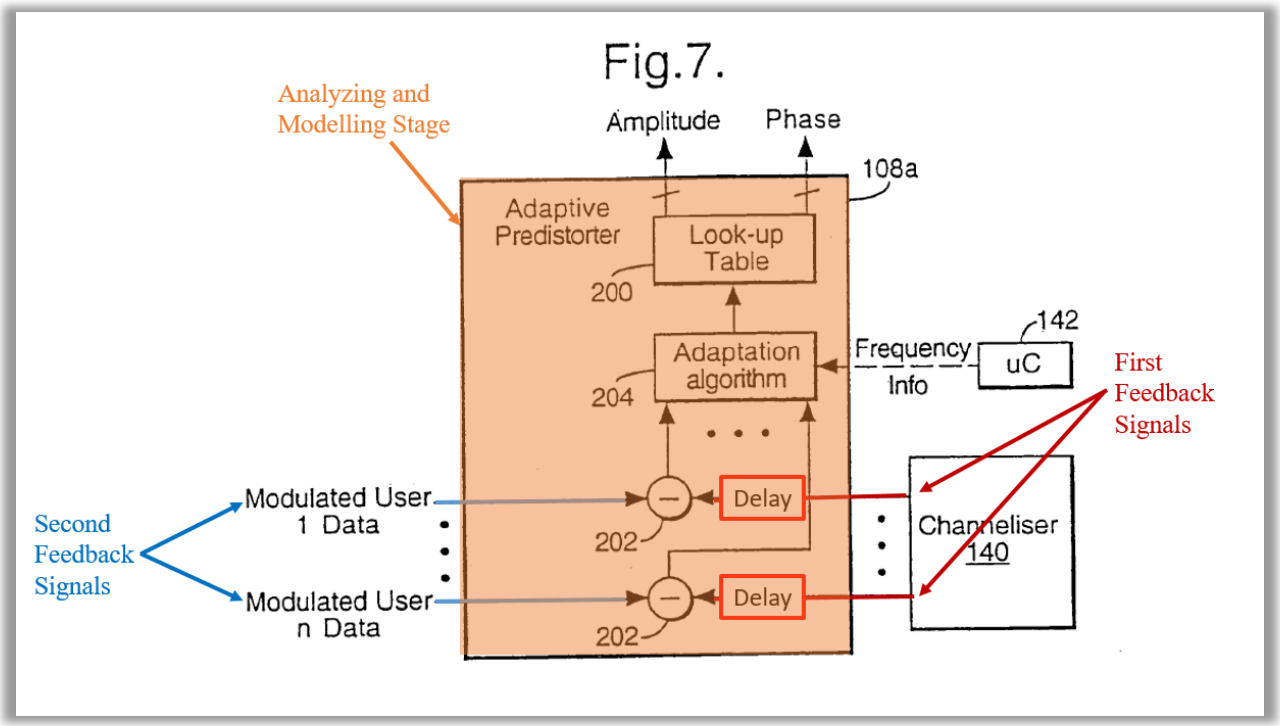

EX-1009, Figure 7 (Annotated and Modified to show Delay Blocks).

[5b] perform reconstruction of the complex baseband signals from said sampling.

Because the output of Posti's PA 122 is an analog signal at an RF frequency, a POSA would have understood that this signal would be digitized and down

converted to an intermediate frequency or baseband before use in modeling. EX-1003, ¶¶168-172. To do this, Posti discloses a feedback path from coupler 128 including mixer 132, band pass filter 136, ADC 138, and channeliser 140. EX-1009, 5:57-6:17. The resulting signals output from the channeliser 140 correspond to the frequencies of transmission and have both I and Q components. EX-1009, 6:12-20 (channelizer 140 "provides N outputs, one for each of the frequencies [on which the signals were transmitted]."), 8:34-36 (channelizer 140 provides I and Q components "for each frequency"). By having both I and Q component, the channelizer's output is a "complex" sampled signal. EX-1003, ¶168.

And while Posti provides an example where the represented first feedback signals are at an intermediate frequency, Posti's teachings are not limited to this. Rather, Posti explains that its "channelizer 140 can be provided ***in any suitable way*** including a bank of digital downconverters and ***fast fourier transform circuitry*** ["FFT"]." EX-1009, 6:20-22 (emphasis added). A POSA understood FFT circuitry in channelizing to be used for down-conversion of intermediate frequency signals to baseband signals and, thus, Posti discloses reconstruction of the first feedback signals to *complex baseband signals*. EX-1003, ¶169.

Further, for Posti's adaptive predistorter 108 to compare like versions of (1) the predistorted signal to (2) the PA's output, a POSA would have understood that the predistorted signals from digital modulators 106 would also need to be provided

to the adaptive predistorter 108 at baseband (so a predistorted baseband signal is being compared to a baseband signal from the post-PA feedback path). This too is addressed by Posti. Namely, Posti explains that frequency upconversion (from baseband) is not limited to digital modulators 106, but that the combiner 110 may instead perform upconversion using an inverse fast Fourier transform ("IFFT"). EX-1009, 7:4-6 ("The combiner 110 requires information on the frequency if an inverse fast fourier transform combining technique is required."). In this scenario where upconversion from baseband is done in combiner 110, the predistorted signal output from the digital modulators 106 is output at baseband and provided to both the adaptive predistorter 108 and combiner 110. EX-1003, ¶170.[6]

[6] Further confirming this operation, Posti explains that "[t]he algorithm performed by the adaptive predistorter 108 may also, as discussed hereinbefore utilize frequency information when calculating the predistortion coefficients." EX-1009, 7:4-9. A POSA understood that when working with complex baseband signals, such frequency information is needed to associate the respective first and second (complex baseband) feedback signals to each other in determining the predistortion coefficients on a per-channel basis. EX-1003, ¶171.

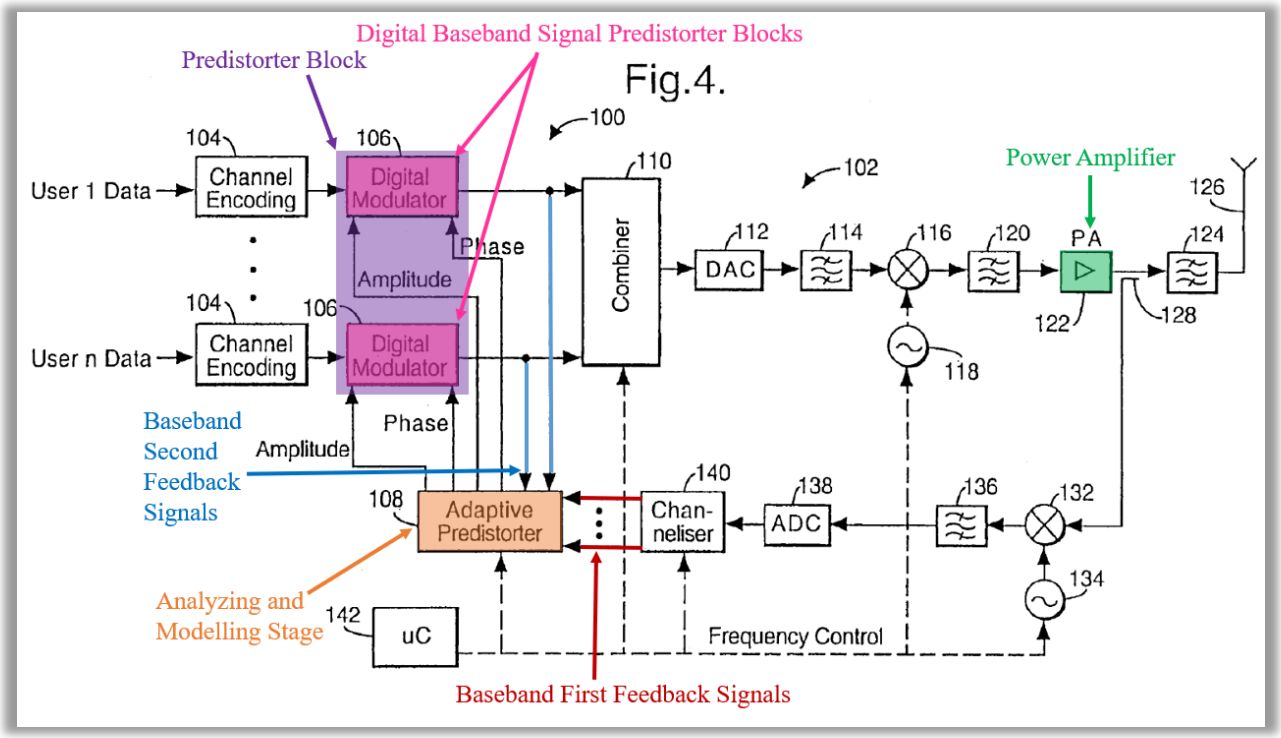

EX-1009, Fig. 4 (Annotated).

Accordingly, a POSA understood Posti's disclosure to include reconstructing the first feedback signals using *complex baseband signals*. EX-1003, ¶172.

<u>Claim 6</u>

[6pre] The linearized transmitter of claim 2,

[6a] said first feedback signals corresponding to a baseband equivalent for all frequency channels and wherein the baseband equivalent signals being extracted from down-converted samples of RF signals output from said power amplifier block.

Posti's feedback signals are taken from the output of the PA by coupler 128 before being processed by mixer 132, band pass filter 136, ADC 138, and channeliser 140. EX-1009, 5:57-6:17. The mixer 132 down-converts to an

intermediate frequency and ADC 138 digitizes the signal. The channeliser 140, which is provided as "a bank of digital downconverters," "provides N outputs, ***one for each of the frequencies***" (EX-1009, 6:16-22 (emphasis added)), and therefore discloses *for all frequency channels down-converting samples of RF signals output from said power amplifier block. See* limitation 5[b]; EX-1009, 4:66-5:5, 6:20-22; EX-1003, ¶¶173-175.

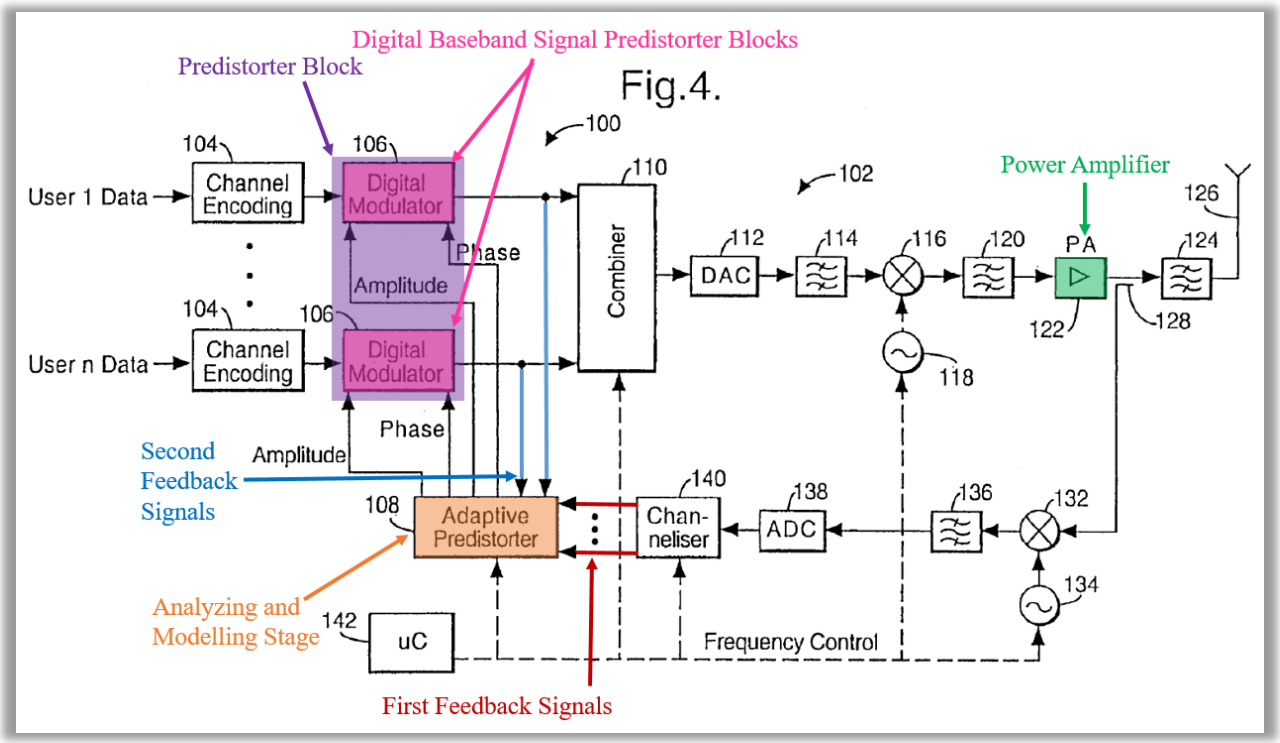

EX-1009, Fig. 4 (Annotated). Thus, Posti's first feedback signals correspond to baseband equivalent signals[7] extracted from down-converted samples of RF signals output from said power amplifier block for all frequency channels. EX-1003, ¶175.

Claim 7

[7pre] The linearized transmitter of claim 2, wherein said signal observation feedback loop further comprises a plurality of channels, each channel comprising:

[7a] an RF filter; a signal down conversion block; and an analog-to-digital converter (ADC).

Posti's adaptive predistorter 108 receives signals output from the channelizer 140 (EX-1009, 5:11-12, 6:19-20) and "[t]he channelizer 140 provides N outputs, one for each of the frequencies" (*id.*, 6:16-18). As each channel is on a different frequency (*id*., 4:43-45), Posti's signal observation feedback loop therefore also comprises a plurality of channels. EX-1003, ¶¶176-178.

Specifically, Posti's first feedback signals forming the signal observation and feedback loop pass from coupler 128 to mixer 132 (*i.e*, *signal down conversion block*) (EX-1009, 5:50-60), the mixer 132 passes the signals to a band pass filter 136 (*i.e.*, *an RF filter*) (*id.*, 6:5-8), and then the output of band pass filter 136 is provided

[7] As explained in limitation 5[b], Posti discloses complex baseband feedback signals, and therefore likewise discloses claim 6's "baseband equivalent signals." EX-1003, ¶167.

to ADC 138 (*i.e., analog to digital converter*) (*id.*, 6:8-11). Accordingly, the components recited in limitation [7a] are expressly included in Posti's feedback loop. EX-1003, ¶177.

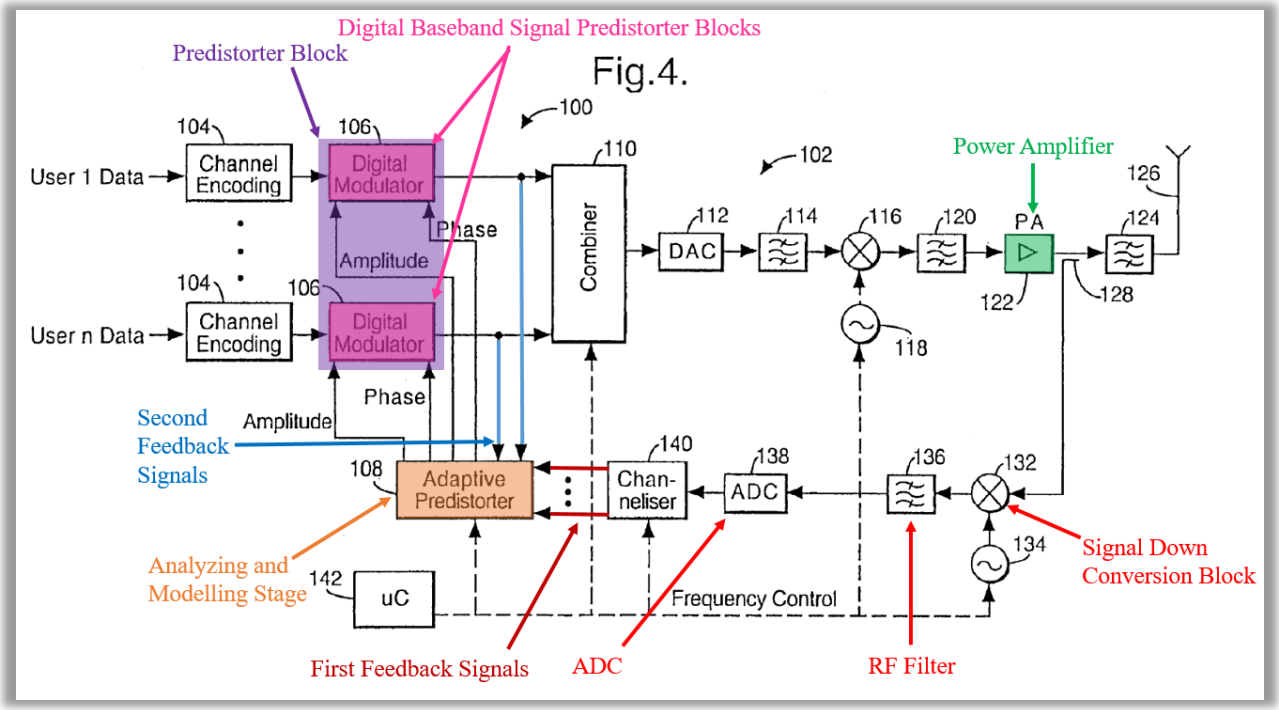

EX-1009, Fig. 4 (Annotated).

To the extent Patent Owner argues that Claim 7 requires multiple parallel feedback paths for each plurality of channels, this would have been well within the understanding of a POSA and a trivial implementation detail. EX-1003, ¶178. A POSA understood that to do so, all that would be required is to replace Posti's channelizer with parallel versions of the already disclosed feedback path including mixer 132 (*i.e*, *signal down conversion block*) (EX-1009, 5:58-60), band pass filter 136 (*i.e.*, *an RF filter*) (*id.*, 6:5-8), and ADC 138 (i.e., *analog to digital converter*)

(*id.*, 6:8-11). This implementation would provide a feedback path for each channel, and the mixers 132 would advantageously be used to convert each channel directly down to baseband in their respective signal paths. A POSA would have been motivated to apply this implementation detail and option to reduce the number of down-conversion stages and to obviate the need for channelizer 140. EX-1003, ¶178.

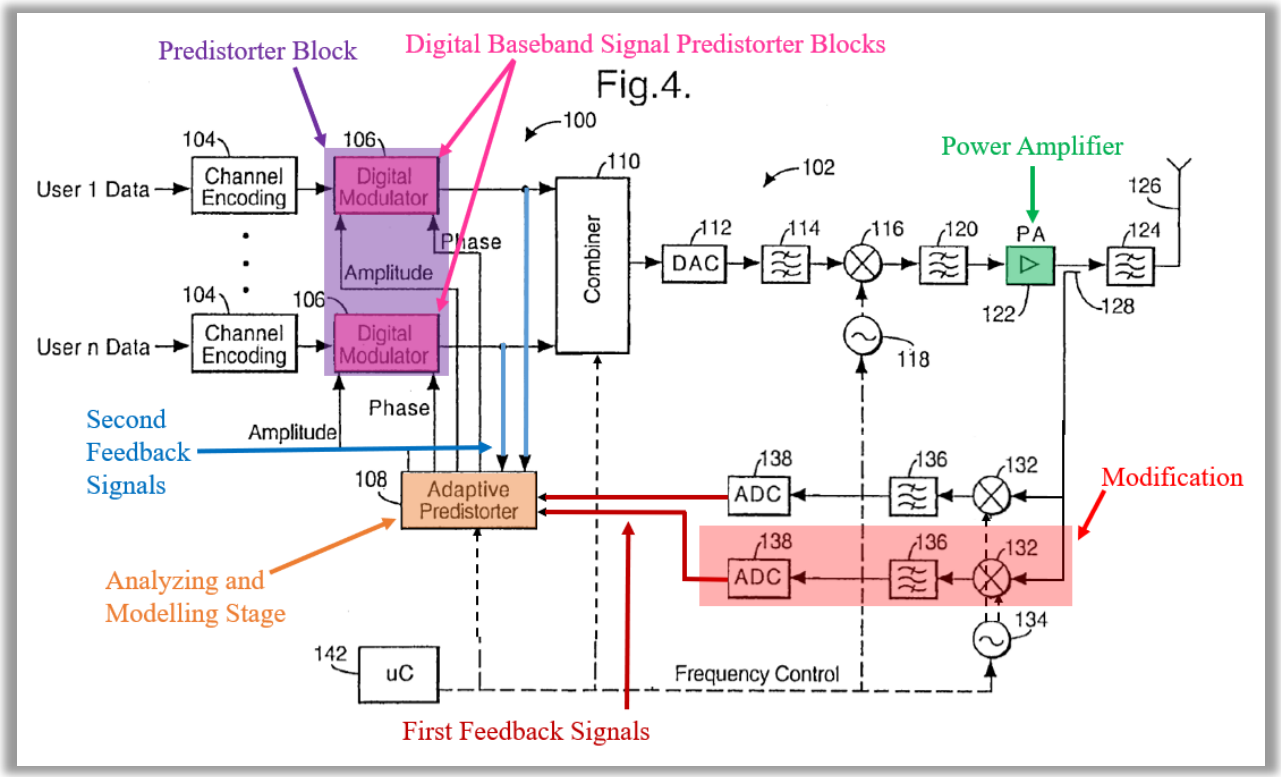

EX-1009, Fig. 4 (Annotated and Modified).

<u>Claim 10</u>

[10pre] A method for linearizing a transmitter, said method comprising:

See limitation [1pre].

[10a] effecting predistortion of concurrent input signals to output concurrent predistorted signals using a digital signal predistorter block including digital baseband signal predistorters;

See limitation [1a].

[10b] amplifying the predistorted signals using a power amplifier block;

See limitation [1b].

[10c] receiving in an analyzing and modelling stage first feedback signals taken from an output of the power amplifier, and second feedback signals taken concurrently from the concurrent predistorted signals; and using the first feedback and the second feedback signals in the analyzing and modeling stage to model a nonlinearity in the power amplifier, wherein the digital baseband signal predistorters are updated by the analyzing and modelling stage.

See limitation [1c].

D. Ground 4: Claims 8 and 9 are Obvious Under 35 U.S.C. § 103(a) over Posti in View of Cidronali

1. Motivation to Combine the Teachings of Posti with the Teachings of Cidronali

Posti renders obvious the claimed linearized transmitter, including an analyzing and modeling stage and signal observation feedback loop as recited in Claims 1 and 2. It was also known, as explained in the State of the Art, that the sampling rate of Posti's feedback loop would either be configured according to the Nyquist rate, or subsampled at a rate lower than Nyquist. Indeed, Patent Owner admitted during prosecution of the parent patent to the '296 patent that it "is well known in the art of signal communication that subsampling is the process of

sampling at a frequency less than the Nyquist rate." EX-1015, 6. Cidronali discloses a single subsampling receiver for use with the very same type of predistorter as disclosed in Posti, and a POSA would have been motivated to modify the teachings of Posti with Cidronali's subsampling teachings. EX-1003, ¶¶183-188.

First, a POSA would have been motivated to modify the teachings of Posti to subsample for the benefit of reducing the complexity and cost of predistorter implementation. Posti itself recognizes the desirability of reducing transmitter costs (EX-1009, 1:60-61), and Petitioners' proposed combination achieves cost reduction by minimizing the need for expensive components. *See* §V.A.3 (*supra*); EX-1019, 3:65-67; EX-1001, 2:7-13; EX-1003, ¶184.

Second, for multiband signals, uniform sampling according to the Nyquist rate can be an inefficient method requiring more components to capture the signal, which increases the complexity of the system. EX-1016, 189; §V.A.3 (*supra*). Subsampling addresses this. EX-1003, ¶185. In fact, Cidronali explains that subsampling and its exemplary subsampling receiver "can be adapted to down-convert two (or more) band-limited signals," making it an ideal choice for multiband implementations. EX-1006, 000002. Thus, a POSA would have been motivated to minimize and simplify Posti's feedback path in a manner that is more efficient with the inclusion of subsampling, "allow[ing] [for] extreme flexibility and coherent dual-band down-conversion." EX-1006, 000001. Similarly, Posti itself suggests that the disclosed

invention would be obvious to implement with different frequency conversion architectures (EX-1009, 9:30-33), and that only a "small part" of Posti's amplified signal needs to be captured as feedback (*id.*, 5:50-57). All of this would have suggested the use of subsampling to a POSA. EX-1003, ¶185; *KSR*, 550 U.S. at 421.

Third, a POSA would have understood that by subsampling, Posti's post-PA feedback architecture would allow for direct down conversion from the carrier frequency, resulting in cost savings by reducing the number of components and increasing PA performance. These advantages would have provided a POSA with further motivation to use subsampling. EX-1006, 000002; EX-1003, ¶186.

Fourth, by subsampling and down-converting in the digital domain, such as done in Cidronali, Posti's system would more easily accommodate a wide range of frequency bands. This additional architectural flexible would have provided further motivations to subsample as part of Posti's feedback loop. EX-1003, ¶187.

Modifying the teachings of Posti to include subsampling and, in particular, a single subsampling-based receiver, would have been achieved with a reasonable expectation of success. Posti's predistortion technique would fundamentally remain unchanged, the only difference being the mechanics of how the PA's feedback signals are fed into Posti's adaptive predistorter. Specifically, a POSA would have simply implemented Posti's feedback path with Cidronali's subsampling receiver in the place of RF filter 136 and mixer 132. Further, Posti's channelizer 140 and ADC

136 would not need any modification to support Cidronali's subsampling components. EX-1003, ¶188. This modification would have been simple for a POSA to achieve as it requires only using prior art components according to their established functions. *Id.*, ¶188; *KSR*, 550 U.S. at 421.

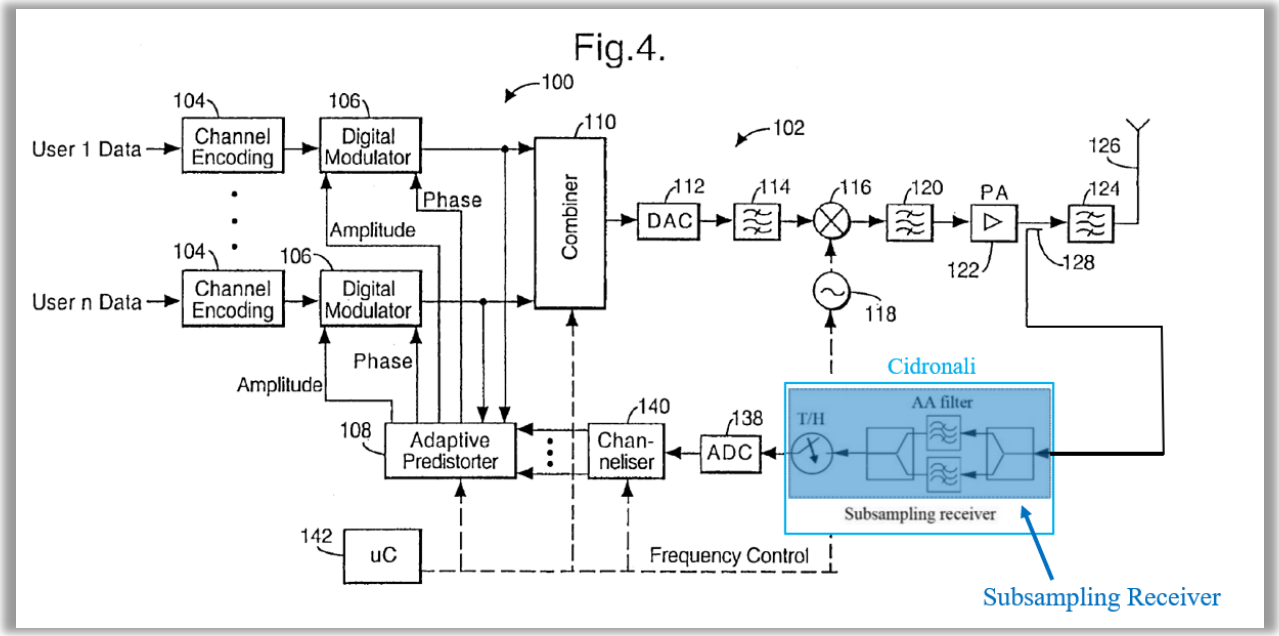

EX-1009, Fig. 4 (Annotated and Modified in View of EX-1006, Fig. 4).

2. Detailed Application to the Challenged Claims

<u>Claim 8</u>

[8.0] The linearized transmitter of claim 2, wherein said signal observation feedback loop further comprises:

[8a] a single subsampling-based receiver to down-convert samples output from said power amplifier block.

Cidronali's single subsampling receiver "allows [for] extreme flexibility and coherent dual-band down-conversion" (EX-1006, 000001), thus cost-effectively

down-converting RF samples from a PA. As combined with Posti, therefore, the claimed *single subsampling-based receiver to down-convert samples output from a concurrent multi-band transmitter* is rendered obvious. EX-1003, ¶189.

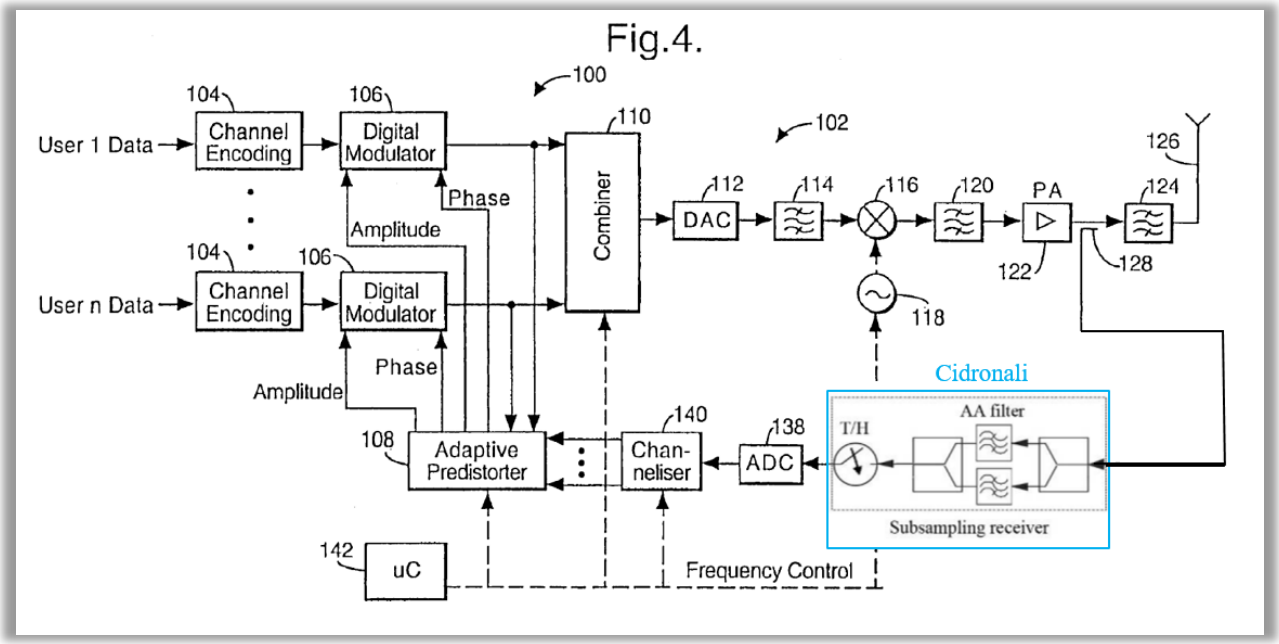

EX-1009, Fig. 4 (Annotated and Modified in View of EX-1006, Fig. 4).

<u>Claim 9</u>

[9pre] The linearized transmitter of claim 8, wherein said single subsampling-based receiver further comprises:

[9a] an RF filter; a track and hold (T&H) block; and an analog-to-digital converter (ADC).

To provide "coherent dual-band down-conversion" (EX-1006, 000001), Cidronali's single subsampling-based receiver uses an anti-aliasing/AA filter *(RF filter)*, T/H component (*track and hold (T&H) block*), and ADC (*an analog-to-*

digital converter) (*id.,* Fig. 4). These commonplace components recited in claim 9 are further illustrated in the annotated figure below. EX-1003, ¶190.

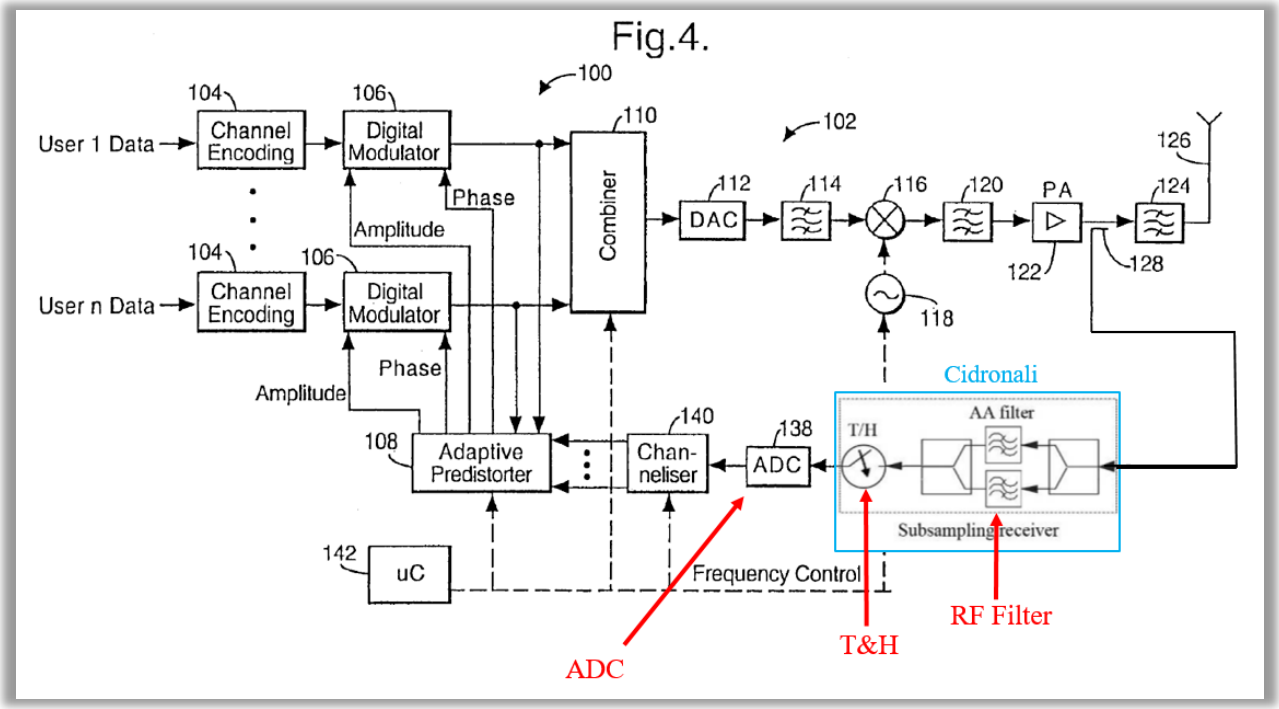

EX-1009, Fig. 4 (Annotated and Modified in View of EX-1006, Fig. 4).

VIII. THE BOARD SHOULD NOT EXERCISE ITS DISCRETION TO DENY INSTITUTION

A. The Board Should Not Deny Review Under 35 U.S.C. § 325(d)

None of the references relied upon in this Petition were cited, discussed, or applied in the ’296 Patent’s prosecution history, nor are the references the same or substantially the same as those considered during prosecution. *See* Ex. 1002, 98, 163, 208. Accordingly, the Board should not exercise its discretion under Section 325(d).

B. The Board Should Not Deny Review Under 35 U.S.C. § 314(a)

Under *Fintiv*, the Board takes a holistic view of whether efficiency, fairness, and the merits support the exercise of authority to deny institution in view of an earlier trial date in a parallel proceeding. *Apple Inc. v. Fintiv, Inc.*, Case IPR2020-00019, Paper 11 at 6 (March 20, 2020). As the Challenged Claims have never been tested against the most relevant prior art, the Board should not exercise that discretion here.

Factor 1 is neutral because no request for stay has been filed.

Factor 2 is neutral. A scheduling order sets trial for November 17, 2025. EX-1017. However, according to the most recent statistics on median time-to-trial for civil actions, the median time to trial in the Eastern District of Texas is 21.6 months, which would push the trial date to around January 2026 (Ex. 1018, 35). Further, Smart RF filed three separate cases (now consolidated for discovery), asserting five patents with a total of 73 claims. The cases also involve multiple intervenors. These facts make it unlikely for the cases to proceed according to the Court's initial schedule. But even if jury selection were to proceed on November 17, 2025, the trial would decide only one of the three cases. Each of the defendant Petitioners are entitled to separate trials, which will necessarily proceed on separate dates to be set by the court at a later time and likely spreading well into 2026. As such, there are explicit and inherent uncertainties for this case given the number of parties involved

and the number of trials regarding this patent. And at minimum, because much can change in eight months, the current trial date does not support denial. *See Dish Network v. Broadband iTV*, IPR2020-01280, Paper 17 at 16 (PTAB Feb. 4, 2021).

Factor 3 weighs against discretionary denial. The district court has not issued any substantive rulings in any case with respect to the ’296 patent, and the claim construction hearing is not scheduled until May 30, 2025, at the earliest. Further, the Court will not consider motions for summary judgment until after the likely September 2025 deadline for an institution decision in this case. *See* Ex. 1017, 5, 6.

Factor 4 weighs against discretionary denial. Petitioners stipulate that if the IPR is instituted, Petitioners will not pursue in the Related Litigation any ground raised or that reasonably could have been raised in this Petition. *Sotera Wireless, Inc. v. Masimo Corp.*, IPR2020-01019, Paper 12 at 13-20 (Dec. 1, 2020); EX-1022.

Under **Factor 5**, Petitioners are defendants (or intervenors) in the Related Litigation, which might weigh in favor of discretionary denial; however, factors 1, 2, and 5, collectively, are neutral. *See HP Inc. v. Slingshot Printing LLC*, IPR2020-01084, Paper 13 at 9 (Jan. 14, 2021).

Assessing *Fintiv* factors 1–5, the Board should find that discretionary denial is not supported. Nevertheless, if the Board reaches the compelling merits question, the merits of the Petition are particularly strong.

Under **Factor 6**, and as described in Grounds 1-4, the merits of the Petition are particularly strong and compelling. For example, the prior art relied upon herein unquestionably establishes the well-known use indirect learning and taking feedback signals concurrently from the system's predistorted signals that was added during prosecution and that caused the examiner to withdraw his rejection. The evidence presented, if unrebutted in trial, would plainly lead to a conclusion that one or more claims are unpatentable by a preponderance of the evidence.

When viewed holistically, the timing of the present Petition is reasonable and the efficiency, fairness, and the compelling merits support instituting review.

IX. MANDATORY NOTICES – 37 C.F.R. § 42.8

A. Real Parties-In-Interest Under 37 C.F.R. § 42.8(b)(1)

Petitioners T-Mobile, AT&T, Verizon, Ericsson and Nokia are real parties-in-interest ("RPIs"). In an abundance of caution, only for purposes of this proceeding, and only to the extent that Patent Owner contends that they should be named an RPI, Petitioners also identify the following entities as potential RPIs without conceding that they would satisfy the factually intensive RPI test: Sprint LLC, Sprint Solutions LLC, Sprint Spectrum LLC, T-Mobile USA, Inc., AT&T Services, Inc., AT&T

Enterprises LLC[8], Verizon Corporate Services Group Inc. and Telefonaktiebolaget LM Ericsson. In addition, some of the entities listed above out of an abundance of caution are holding companies that are legally and factually distinct from their subsidiaries (that may also be listed above and which maintain their own independent corporate status, identity, and structure) and have not provided any products or services that might be at issue in the underlying patent infringement lawsuit.

B. Related Matters Under 37 C.F.R. § 42.8(b)(2)

To Petitioners' knowledge, the '296 Patent is involved in the following cases, which have been consolidated:

Style	Number	Tribunal	Filed
Smart RF Inc. v. AT&T Mobility LLC	2:24-cv-00195	EDTX	March 19, 2024
Smart RF Inc. v. Cellco Partnership d/b/a Verizon Wireless	2:24-cv-00196	EDTX	March 19, 2024
Smart RF Inc. v. T-Mobile US, Inc. et al	2:24-cv-00197	EDTX	March 19, 2024

[8] Related-Matter Defendant AT&T Corp. has undergone a corporate transaction and is now merged and converted into AT&T Enterprises, LLC.

C. Lead and Back-Up Counsel Under 37 C.F.R. § 42.8(b)(3)

Lead Counsel	Back-Up Counsel
Christopher Ricciuti Reg. No. 65,549 CRicciuti@duanemorris.com DUANE MORRIS LLP 901 New York Avenue NW Suite 700 East Washington, D.C. 20001 T: (202) 776-7832	Glenn Richeson Reg. No. 73,480 GDRicheson@duanemorris.com DUANE MORRIS LLP 1075 Peachtree Street NE Suite 1700 Atlanta, GA 30309 T: (404) 253-6998 Matthew S. Yungwirth (*pro hac vice* motion forthcoming) msyungwirth@duanemorris.com DUANE MORRIS LLP 1075 Peachtree Street NE Suite 1700 Atlanta, GA 30309 T: (404) 253-6935

D. Service Information Under 37 C.F.R. § 42.8(b)(4)

Service via hand-delivery may be made at the postal mailing address of either lead or back-up counsel. Petitioners consents to service by e-mail.

E. PAYMENT OF FEES – 37 C.F.R. § 42.103

The required fee is being paid using the Patent Review Processing System.

X. CONCLUSION

Petitioners respectfully request IPR institution and cancellation of Claims 1-10.

Respectfully submitted,

Dated: March 18, 2025

/Christopher Ricciuti/
Christopher Ricciuti
USPTO Reg. No. 65,549

XI. CERTIFICATE OF WORD COUNT

Pursuant to 37 C.F.R. § 42.24, Petitioners hereby certifies, in accordance with and in reliance on the word count provided by the word-processing system used to prepare this Petition, that the number of words in this Petition is 13,516. Pursuant to 37 C.F.R. § 42.24(d), this word count excludes the table of contents, table of authorities, mandatory notices under § 42.8, certificate of service, certificate of word count, appendix of exhibits, and any claim listing.

Dated: March 18, 2025

/Christopher Ricciuti/
Christopher Ricciuti
USPTO Reg. No. 65,549

CERTIFICATION OF SERVICE ON PATENT OWNER

Pursuant to 37 C.F.R. §§42.6(e), 42.8(b)(4) and 42.105, the undersigned certifies that on March 18, 2025, a complete and entire copy of this Petition for *Inter Partes* Review of U.S. Patent 10,958,296 and all supporting exhibits and other documents (including Petitioners' Power of Attorneys) were served via Federal Express, postage prepaid, to the correspondence address of record for the '296 Patent, as well as on Smart RF's litigation counsel via Federal Express and email:

Date of service	March 18, 2025
Manner of service	FEDERAL EXPRESS
Documents served	Petition for *Inter Partes* Review Under 35 U.S.C. § 312 and 37 C.F.R. § 42.104 of U.S. 10,958,296; Petitioner's Exhibit List; All Exhibits; Petitioner's Power of Attorney.
Persons served	Kevin Pillay (correspondence address of record) NUA-IP 503-85 Range Road Ottawa, ONTARIO K1N 8J6 Canada Patrick J. Conroy Texas Bar No. 24012448 Ryan P. Griffin Texas Bar No. 24053687 Jonathan H. Rastegar Texas Bar No. 24064043 Nathan L. Levenson Texas Bar No. 24097992 NELSON BUMGARDNER CONROY PC 2727 N. Harwood St., Suite 250 Dallas, TX 75201 pat@nelbum.com

ryan@nelbum.com
jon@nelbum.com
nathan@nelbum.com

/Christopher Ricciuti/
Christopher Ricciuti
USPTO Reg. No. 65,549