IN THE UNITED STATES DISTRICT COURT
FOR THE EASTERN DISTRICT OF TEXAS
MARSHALL DIVISION

SMART RF INC.,	§	
	§	
Plaintiff,	§	CIVIL ACTION NO. 2:24-cv-00196
	§	
v.	§	
	§	
	§	**JURY TRIAL DEMANDED**
CELLCO PARTNERSHIP D/B/A VERIZON WIRELESS.	§	
	§	
Defendant.	§	
	§	

PLAINTIFF'S COMPLAINT FOR PATENT INFRINGEMENT

Plaintiff Smart RF Inc. files this Complaint against Defendant Cellco Partnership d/b/a Verizon Wireless (collectively, "Verizon" or "Defendant") for infringement of U.S. Patent No. 7,035,345 (the "'345 Patent"); U.S. Patent No. 8,767,857 (the "'857 Patent); U.S. Patent No. 9,641,204 (the "'204 Patent"); U.S. Patent No. 10,958,296 (the "'296 Patent); and U.S. Patent No. 8,078,561 (the "'561 Patent"), collectively, the "Asserted Patents."

THE PARTIES

1. Smart RF Inc. is a Canadian business corporation located at 38 Royal Oak Drive, NW Calgary, AB, T3G 5P2, Canada.

2. On information and belief, Defendant Cellco Partnership d/b/a Verizon Wireless ("Verizon") is a general partnership organized and existing under the laws of Delaware, with a principal place of business at 1 Verizon Way, Basking Ridge, New Jersey 07920. Verizon is doing business, either directly or through its agents, on an ongoing basis in this judicial district and elsewhere in the United States, and has a regular and established place of business in this judicial

district. Verizon may be served through its registered agent The Corporation Trust Company, Corporation Trust Center, 1209 Orange Street, Wilmington, Delaware 19801.

JURISDICTION AND VENUE

3. This is an action for patent infringement arising under the patent laws of the United States, 35 U.S.C. §§ 1, *et seq*., including, without limitation, 35 U.S.C. §§ 271, 281, 284, and 285. This Court has subject matter jurisdiction pursuant to 28 U.S.C. §§ 1331 and 1338(a).

4. This Court has specific and general personal jurisdiction over Defendant consistent with the requirements of the Due Process Clause of the United States Constitution and the Texas Long Arm Statute because, *inter alia*, (i) Defendant has engaged in continuous, systematic, and substantial business in Texas; (ii) Defendant is registered to do business in Texas; (iii) Defendant maintains regular and established places of business in this District; (iv) Defendant has committed and continues to commit, acts of patent infringement in this State and in this District. Such acts of infringement include the making, using, and selling of cellular services that leverage and infringe the inventions of the Asserted Patents (as more particularly identified and described throughout this Complaint, below) in this State and this District.

5. Defendant maintains a "regular and established" place of business in this district, including by (a) maintaining or controlling retail stores in this district, (b) maintaining and operating infringing base stations in this district, including on cellular towers and other installation sites owned or leased by them, and (c) maintaining and operating other places of business in this district, including those where research, development, or sales are conducted, where customer service is provided, or where repairs are made. Defendant's significant physical presence in this District includes, but not limited to, ownership of or control over property, inventory, or infrastructure. For example, Defendant maintains retail stores located at 2035 North Central

Expressway, Suite 620, McKinney, Texas 75070; 8988 South Broadway Avenue, Tyler, Texas 75703; and 2330 Preston Road, Suite 500, Frisco, Texas 75034, all of which lie within this federal judicial district.

6. In addition, Defendant has derived substantial revenues from its infringing acts occurring within this State and this District. It has substantial business in this State and this District, including: (i) at least part of its infringing activities alleged herein; and (ii) regularly doing or soliciting business, engaging in other persistent conduct, and/or deriving substantial revenue from infringing goods and services provided to Texas residents. Defendant derives benefits from its presence in this federal judicial district, including, but not limited to, sales revenue and serving customers using its mobile network in this district. For example, Defendant receives revenue from its corporate stores in this district, by selling network access, phones/products, and services, and by receiving payment for network access, phones/products, and services. Defendant derives benefits from its presence in this federal judicial district, including, but not limited to, sales revenue and serving customers using its mobile network in this district. For example, Defendant receives revenue from its corporate stores in this district, by selling network.

7. Defendant also has offices, including offices for its network technology and planning group, within this federal judicial district, including, for example, an office in Plano, Texas.

8. Defendant has, thus, in the many ways described above, availed itself of the benefits and privileges of conducting business in this State and willingly subjected itself to the exercise of this Court's personal jurisdiction over it. Indeed, Defendant has sufficient minimum contacts with this forum through its transaction of substantial business in this State and this District and its

commission of acts of patent infringement as alleged in this Complaint that are purposefully directed towards this State and District.

9. Venue is proper in the Eastern District of Texas pursuant to 28 U.S.C. § 1400(b) because, among other things, (i) Defendant is subject to personal jurisdiction in this District; (ii) Defendant has committed acts of patent infringement in this District; and (iii) Defendant has regular and established places of business in this District. On information and belief, Defendant maintains "regular and established" places of business in this district, including the network technology and planning office and numerous retail stores in this District through which it transacts business.

BACKGROUND

10. As the cellular market's technology and generational demands evolve (from 2G and 3G to 4G, 5G, and beyond), the demand for a cellular carrier's base stations to consistently provide dependable signal quality, while simultaneously optimizing power efficiency, continues to rise. The efficient operation of a base station's RF power amplifiers (PAs) is crucial to ensure this reliability. This is due to the pivotal role that PAs play in signal transmission, serving as the vital link between generated signals and their effective broadcast to cellular devices and ensuring reliability amidst widely and rapidly changing conditions.

11. For example, when a base station generates an RF signal, it undergoes amplification through a PA before transmission via the antenna. This amplification is essential to ensure that the signal can reach its intended destination, covering the necessary distance and penetrating obstacles effectively. In an ideal scenario, the PA takes the input signal and efficiently transforms it into a higher-power signal proportionate to the input; it achieves this transformation with maximum power efficiency, converting most of the supplied DC power into useful signal output power.

12. However, achieving this ideal scenario poses a significant challenge for cellular carriers in the real world because PAs are inherently nonlinear.[1] When PAs operate near their maximum power levels, they introduce unintended non-linear distortions into the amplified signals. These distortions lead to signal quality degradation, heightened network operating costs, and regulatory concerns, especially regarding adjacent channel power ratio (ACPR) requirements. To address this, PAs must operate at a point significantly below their saturation level, resulting in notably low power efficiency, often less than 10%. In these scenarios, over 90% of the DC power supplied to the amplifier is dissipated as heat.

13. Such operational constraints pose significant challenges to a cellular carrier's ability to consistently deliver reliable signals from their base stations. To address these challenges, it is understood that cellular carriers integrate digital pre-distortion hardware and/or software into the infrastructure of their cellular base stations to linearize the PAs found within these stations and improve overall system performance. This integration allows cellular carriers to operate their base stations' PAs closer to saturation, resulting in higher output power and greater power efficiency, while maintaining linearity.[2]

14. In a typical communication system, the digital pre-distortion hardware and/or software processes each input signal independently to accurately predict and correct distortions introduced by the PAs in each path including the cross-coupling between these paths. This precision ensures that signals, arriving from different paths and devices, undergo individualized optimization, improving both linearity and power efficiency. Digital predistortion ("DPD") tailors corrections to the unique characteristics of each signal path, facilitating the operation of multiple-

[1] "How DPD improves power amplifier efficiency," available at: https://www.5gtechnologyworld.com/how-dpd-improves-power-amplifier-efficiency/
[2] *Id.*

input multiple-output ("MIMO") configurations and ensuring reliable and high-quality cellular communication services. The Asserted Patents relate to systems and methods for providing digital pre-distortion in wireless communication systems.

THE ASSERTED PATENTS

15. Smart RF is the sole and exclusive owner of all right, title, and interest in the Asserted Patents and holds the exclusive right to take all actions necessary to enforce its rights in, and to, the Asserted Patents, including the filing of this patent infringement lawsuit. Smart RF also has the right to recover all damages for past, present, and future infringements of the Asserted Patents and to seek injunctive relief as appropriate under the law.

16. The '345 Patent is entitled, "Adaptive predistortion device and method using digital receiver." The '345 Patent lawfully issued on April 25, 2006, and stems from U.S. Patent Application No. 09/877,608, which was filed on June 8, 2001.

17. The '857 Patent is entitled, "Multi-cell processing architectures for modeling and impairment compensation in multi-input multi-output systems." The '857 Patent lawfully issued on July 1, 2014, and stems from U.S. Patent Application No. 12/780,455, which was filed on May 14, 2010.

18. The '204 Patent is entitled, "Digital multi-band predistortion linearizer with nonlinear subsampling algorithm in the feedback loop." The '204 Patent lawfully issued on May 2, 2017, and stems from U.S. Patent Application No. 14/467,642, which was filed on August 25, 2014.

19. The '296 Patent is entitled, "Digital multi-band predistortion linearizer with non-linear subsampling algorithm in the feedback loop." The '296 Patent lawfully issued on March 23, 2021, and stems from U.S. Patent Application No. 15/583,343, which was filed on May 1, 2017.

20. The ’561 Patent is entitled, “Nonlinear behavior models and methods for use thereof in wireless radio systems.” The ’561 Patent lawfully issued on December 13, 2011, and stems from U.S. Patent Application No. 11/999,264, which was filed on December 3, 2007.

21. Smart RF and its predecessors complied with the requirements of 35 U.S.C. § 287, to the extent necessary, such that Smart RF may recover pre-suit damages for the Asserted Patents.

22. The claims of the Asserted Patents are directed to patent eligible subject matter under 35 U.S.C. § 101. They are not directed to an abstract idea, and the technologies covered by the claims comprise systems and/or consist of ordered combinations of features and functions that, at the time of invention, were not, alone or in combination, well-understood, routine, or conventional.

COUNT I

(INFRINGEMENT OF U.S. PATENT NO. 7,035,345)

23. Plaintiff incorporates the preceding paragraphs herein by reference.

24. Smart RF is the assignee of the ’345 Patent, with ownership of all substantial rights, title, and interest in and to the ’345 Patent including the right to exclude others and to enforce, sue, and recover damages for past and future infringements.

25. The ’345 Patent is valid, enforceable, and was duly and legally issued by the United States Patent and Trademark Office on April 25, 2006, after full and fair examination.

26. Defendant has directly infringed one or more claims including at least claim 1[3] of the ’345 Patent in this District and elsewhere in Texas and the United States through the provision of its cellular network. Such infringement includes, but is not limited to, the making, using, and

[3] Throughout this Complaint, wherever Smart RF identifies specific claims of the Asserted Patents infringed by Defendant, Smart RF expressly reserves the right to identify additional claims and products in its infringement contentions in accordance with applicable local rules and the Court’s case management order. Specifically identified claims throughout this Complaint are provided for notice pleading only.

selling of cellular services that leverage and infringe the inventions of the ’345 Patent. For example, on information and belief, the accused cellular network included cellular base stations that employed digital pre-distortion techniques covered by the ’345 Patent (collectively, the “’345 Accused Instrumentalities”). For example, the cellular network included one or more base stations that included hardware and/or software, such as the Xilinx XCKU035 with LogiCORE IP Digital Pre-Distortion v5.0. To the extent that the ’345 Accused Instrumentalities do not include the Xilinx XCKU035 with LogiCORE IP Digital Pre-Distortion v5.0, they include a custom ASIC or other third party solution that includes substantially similar hardware and performs the same operations detailed below.

27. On information and belief, by way of illustration only, Defendant, via its operation of the ’345 Accused Instrumentalities performed each and every element of claim 1 of the ’345 Patent. The ’345 Accused Instrumentalities performed “an adaptive method for predistorting an RF modulated signal, to be transmitted, supplied by a signal source to an input of a power amplifier having an output for delivering an amplified output signal.” For example, the ’345 Accused Instrumentalities included a combination of hardware and embedded software processes that between them realize pre-distortion.[4] The components within the ’345 Accused Instrumentalities were configured such that the DPD of the RF modulated signal adapted to power dynamics.[5]

28. On information and belief, Defendant’s operation of the ’345 Accused Instrumentalities performed “predistorting the RF modulated signal to be transmitted using an I/Q modulator interposed between the signal source and the input of the power amplifier, and

[4] *See, e.g.,* Ex. A, XILINX LogiCORE IP Digital Pre-Distortion v5.0 Product Specification, pg. 1.
[5] *Id*. at 7 (“DCL is the mechanism by which DPD adapts to power dynamics encountered in a cell due to call load, reconfiguration or other factors.”); *see also id.* at 3 (“Digital Pre-Distortion (DPD) acts on transmitted data to cancel the distortion in the PA by implementing an inverse model of the amplifier. ... [T]he pre-distortion function is applied to the sequence of (digital) transmitted data x(n). It models the non-linearity of the PA.”); *id.* at 5-6 (“Whatever choices are made, based on system-level considerations, the net result is that the IQ data from DPD eventually appears as modulation of an RF carrier wave at the PA”).

controlled by means of amplitude and phase look-up tables stored in a distorting generator." For example, the conceptual block diagram of the components within the '345 Accused Instrumentalities indicates that the I/Q modulator is part of the DPD block and interposed between the signal source and the input of the power amplifier ("PA"):[6]

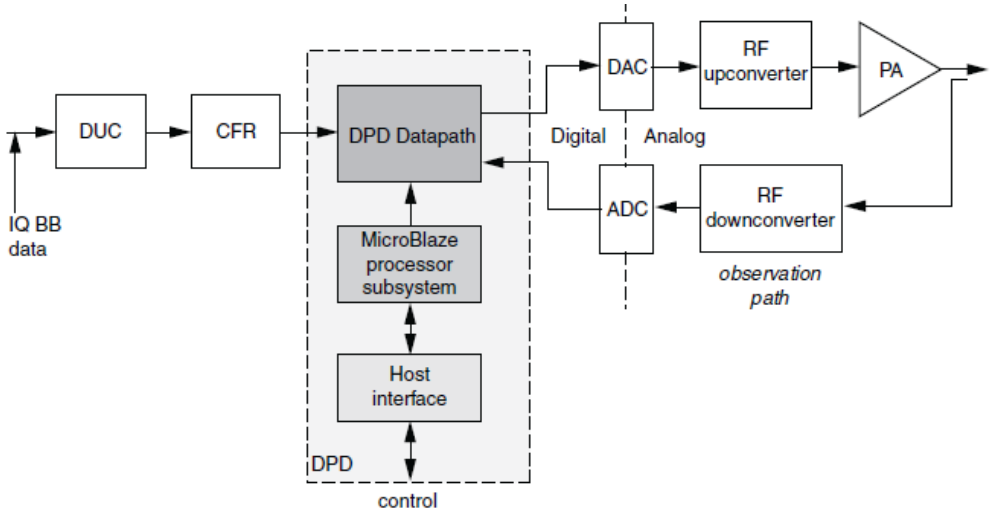

Figure 2: **Xilinx DPD HW Block View**

Further, the "objective of pre-distortion estimation is to choose coefficients $a_{(i)q}$ such that the PA output $y_0(n)$ is as close as possible to x(n)."[7] The '345 Accused Instrumentalities used such coefficients in applying the predistortion function equation. Further, the coefficients $a_{(i)q}$ are multiplied with the memory terms of the Volterra series resulting in IQ modulation.[8] The predistortion was controlled by means of amplitude and phase look-up tables stored in a distorting generator. For example, '345 Accused Instrumentalities included look-up tables.[9] The DPD function utilizes predistortion parameters that are stored in locations within the digital predistortion block, such as the parameter storage and hardware mapping shown below:[10]

[6] *Id.* at 5.
[7] *Id.* at 4.
[8] *Id.*
[9] *Id.* at 44-46.
[10] *Id.* at 6.

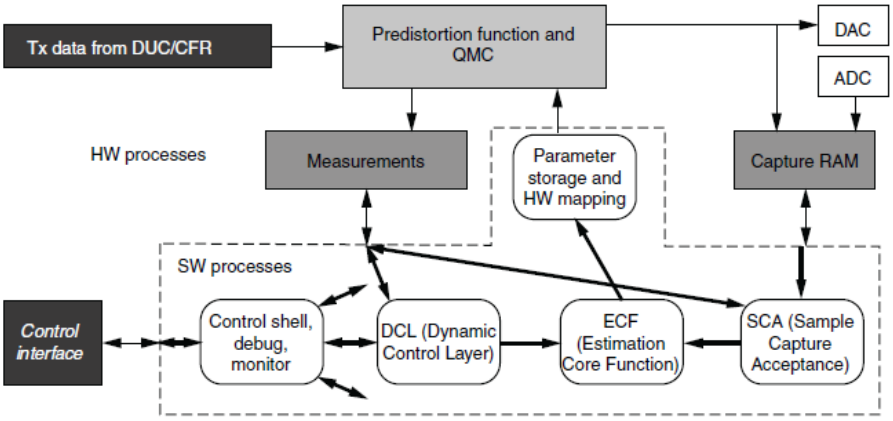

Figure 3: **HW Datapath and Major SW Processes**

The predistortion is applied to the RF modulated signal (e.g., "Tx Data from DUCVCFR" in the above example) using an I/Q modulator which is placed between the signal source and the power amplifier.[11]

29. On information and belief, Defendant's operation of the '345 Accused Instrumentalities performed "producing, via a first digital receiver, a first feedback signal in response to the RF predistorted signal." For example, the '345 Accused Instrumentalities produce a first feedback signal (e.g., z(n)) in response to the pre-distorted signal:[12]

[11] *Id.*
[12] *Id.* at 3.

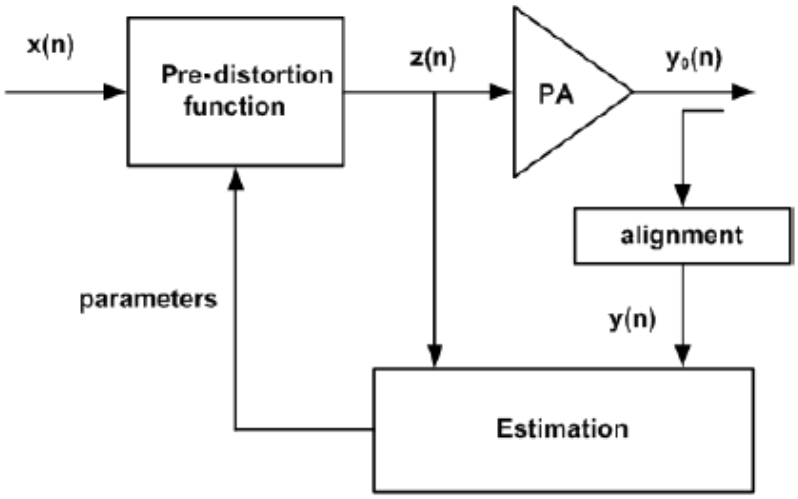

Figure 1: **DPD Algorithmic View**

30. On information and belief, Defendant's operation of the '345 Accused Instrumentalities performed "producing, via a second digital receiver, a second feedback signal in response to the RF amplified output signal from the power amplifier." For example, the '345 Accused Instrumentalities produce a second feedback signal (e.g., y(n)) in response to the RF amplified output signal from the power amplifier.[13]

31. On information and belief, Defendant's operation of the '345 Accused Instrumentalities performed "modeling the power amplifier in response to the first and second feedback signals." For example, the '345 Accused Instrumentalities use an estimation block that takes the first and second feedback signals as inputs, estimates the distortion, and models the further adjustments to the pre-distortion.[14]

32. On information and belief, Defendant's operation of the '345 Accused Instrumentalities performed "updating the predistortion amplitude and phase look-up tables in

[13] *Id.*
[14] *Id.*; *see also id.* ("The processes involved are the formulation of the model on which the pre-distortion function is based. Estimation of its parameters is based on samples of the PA input and output. To separate the linear effect of the PA and the circuitry that drives it, estimation is based on the aligned PA output y(n). The alignment process matches the amplitude, delay and phase variations of $y_0(n)$ to z(n). The predistorter is then dedicated to only modeling the non-linear effects for which it is intended.").

response to said modeling of the power amplifier." For example, the '345 Accused Instrumentalities updated the parameters of the predistortion function based on the modeling in the estimation block.[15] These parameters are stored in memory, or amplitude and phase look-up tables.[16]

33. On information and belief, Defendant's operation of the '345 Accused Instrumentalities was such that "wherein said second feedback signal includes the complex envelope of the RF amplified output signal." For example, the exemplary second feedback signal, y(n), is the complex envelope of the RF amplified output signal.[17] The exemplary second feedback signal is represented in the digital domain, sampled at the same speed as the digital signal z(n), and it is aligned to this complex envelope signal z(n).[18]

34. On information and belief, Defendant's operation of the '345 Accused Instrumentalities was such that "wherein said modeling step includes the discrimination of the complex envelope of the first feedback signal referenced to the complex envelope of the second feedback signal to yield a predistortion function correlated to a behaviour of the power amplifier including nonlinearities and memory effects." For example, the modeling of the PA and predistortion function estimation requires the alignment of signal $y_0(n)$ and z(n) in the time domain, which is accomplished by aligning $y_0(n)$ to lead y(n) such that y(n) and z(n) can be used to extract and yield to a predistortion function correlated to a nonlinear effect of the power amplifier.[19] Additionally, the nonlinear effects described in the product specification are further described as memory terms or effects.[20]

---

[15] *Id*. at 6.
[16] *Id*.
[17] *Id*. at 3.
[18] *Id*. ("To separate the linear effect of the PA and the circuitry that drives it, estimation is based on the aligned PA output y(n).").
[19] *Id*.
[20] *Id*. at 3-4.

35. Smart RF has been damaged as a result of Defendant's infringement described in this Count. Defendant is, thus, liable to Smart RF in an amount that adequately compensates Smart RF for Defendant's infringements, which, by law, cannot be less than a reasonable royalty, together with interest and costs as fixed by this Court under 35 U.S.C. § 284.

COUNT II

(INFRINGEMENT OF U.S. PATENT NO. 8,767,857)

36. Plaintiff incorporates the preceding paragraphs herein by reference.

37. Smart RF is the assignee of the '857 Patent, with ownership of all substantial rights, title, and interest in and to the '857 Patent including the right to exclude others and to enforce, sue, and recover damages for past and future infringements.

38. The '857 Patent is valid, enforceable, and was duly and legally issued by the United States Patent and Trademark Office on July 1, 2014, after full and fair examination.

39. Defendant has and continues to directly infringe one or more claims including at least claim 1 of the '857 Patent in this District and elsewhere in Texas and the United States through the provision of its cellular network. Such infringement includes, but is not limited to, the making, using, and selling of cellular services that leverage and infringe the inventions of the '857 Patent. For example, the accused cellular network includes cellular base stations that employ digital pre-distortion techniques covered by the '857 Patent (collectively, the "'857 Accused Instrumentalities"). For example, on information and belief, the cellular network includes one or more base stations that include hardware and/or software, such as the hardware operating MaxLin DPD technology. The MaxLin DPD technology incorporates NanoSemi Linearizer Core technology. To the extent that the '857 Accused Instrumentalities do not include MaxLin DPD technology, they include a custom ASIC or other third party solution that includes substantially similar hardware and performs the same operations detailed below.

40. On information and belief, by way of illustration only, Defendant, via its operation of the ’857 Accused Instrumentalities performed and continues to perform each and every element of claim 1 of the ’857 Patent. The ’857 Accused Instrumentalities perform “a method for multiple-input multiple-output impairment pre-compensation.” For example, the ’857 Accused Instrumentalities, such as eNodeBs and gNodeBs within the cellular network provided by Defendant, perform a method for MIMO impairment pre-compensation. Specifically, the ’857 Accused Instrumentalities include hardware, such as a chip equipped to use a NanoSemi Linearizer, that performs impairment signal predistortion.[21] Such hardware performs impairment pre-compensation and “integrates into the digital baseband of a System on Chip (SoC) modem to digitally correct for nonlinearities, linear imperfections, interference and load variations…The NanoSemi Linearizer Core is NanoSemi’s digital pre-distortion linearizer engine to correct for nonlinear distortions in the transmit path.”[22] As shown in Figure 2 below, the multiple inputs are identified in the purple box and the multiple-outputs are identified in the light blue box:[23]

[21] *See, e.g.,* Ex. B, “NanoSemi’s Value Proposition and Competitive Advantages,” pgs. 2-3.
[22] *Id*.
[23] *Id*. at 3.

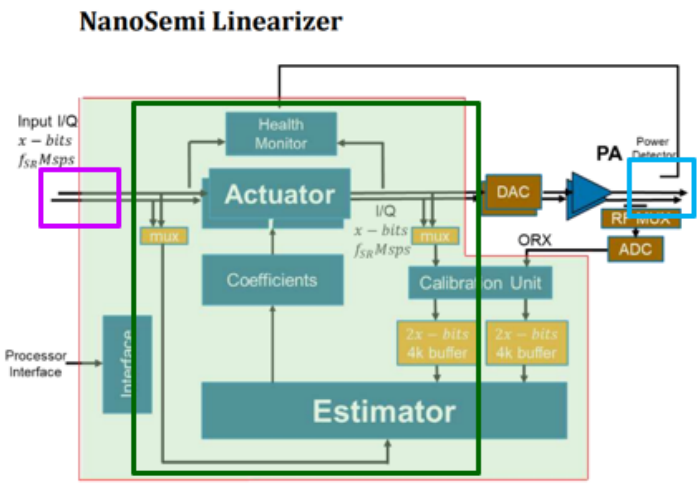

Figure 2: NanoSemi Linearizer™ core with two actuators with one estimator for 2x2 MIMO.

41. On information and belief, Defendant via its operation of the '857 Accused Instrumentalities perform "receiving a plurality of input signals forming a multiple-input signal in a multiple-input multiple-output system." For example, the '857 Accused Instrumentalities include hardware that receives a plurality of input signals (identified in the purple box from Figure 2 above) forming a multiple-input signal in a MIMO system.[24] Likewise, Figure 2 above shows that the system is a "2x2 MIMO" system.

42. On information and belief, Defendant via its operation of the '857 Accused Instrumentalities perform "generating a pre-distorted multiple-input signal from the received multiple-input signal." For example, the '857 Accused Instrumentalities generate a pre-distorted multiple-input signal from the received multiple-input signal by using a block of actuators to distort the multiple-input signal (shown in the red box below).[25]

[24] *Id.*
[25] *Id.*

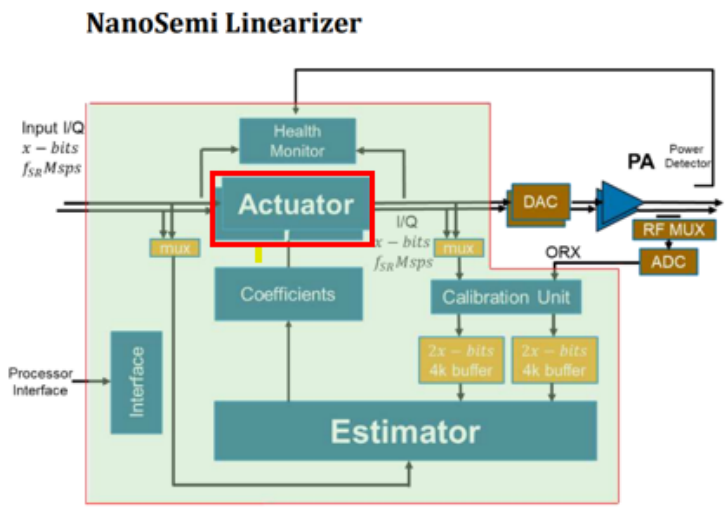

Figure 2: NanoSemi Linearizer™ core with two actuators with one estimator for 2x2 MIMO.

43. On information and belief, Defendant via its operation of the '857 Accused Instrumentalities perform "generating a multiple-output signal by feeding the pre-distorted multiple-input signal into a multiple-input and multiple-output transmitter." For example, the pre-distorted multiple-input signal (shown in green below) is amplified by the PA block (shown in blue below), generating a multiple-output signal (shown in brown below).[26]

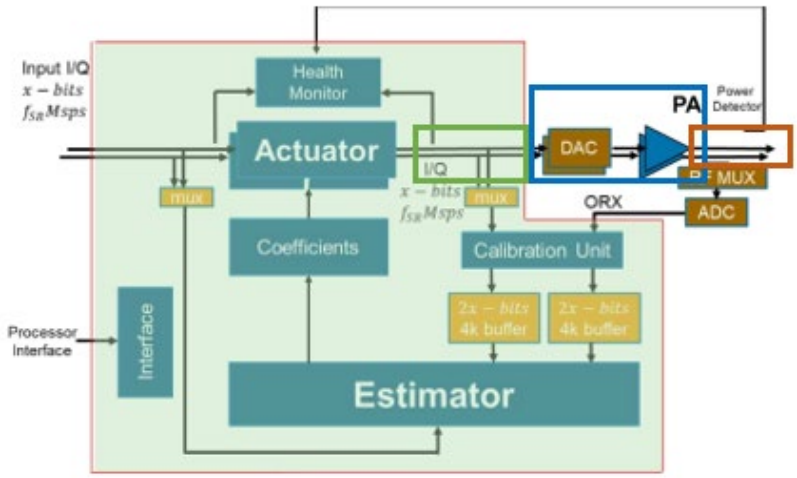

[26] *Id.*; *id.* at 2.

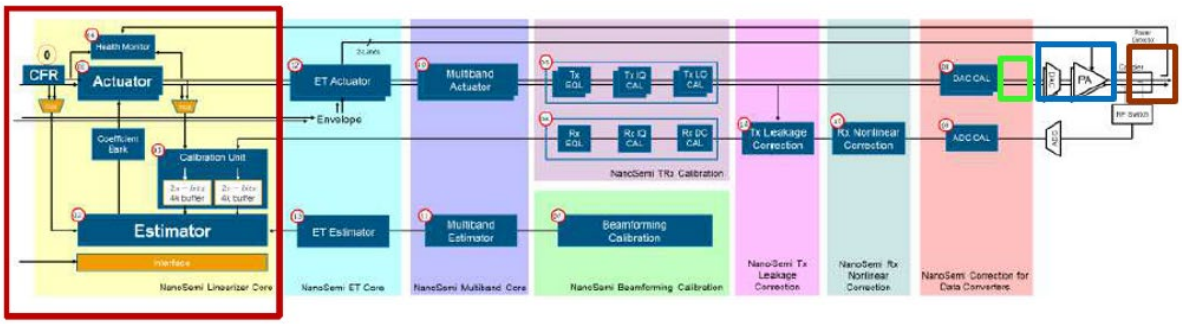

44. On information and belief, Defendant via its operation of the ’857 Accused Instrumentalities perform “estimating impairments generated by the multiple-input and multiple-output transmitter, the impairments comprising nonlinear crosstalk between distinct ones of the plurality of input signals.” For example, the ’857 Accused Instrumentalities estimate the signal impairments based on the feedback signals from the power amplifier block and from the multiple pre-distorted signals. Such estimation may comprise a characterization process that models nonlinear dynamic system.[27] The impairments comprise nonlinear crosstalk between distinct ones of the plurality of input signals. For example, the ’857 Accused Instrumentalities suppress the noise and interference between desired bands:[28]

[27] *Id.* at 5.
[28] Ex. C, “Elevating 4G and 5G Infrastructure Connectivity,” pg. 7.

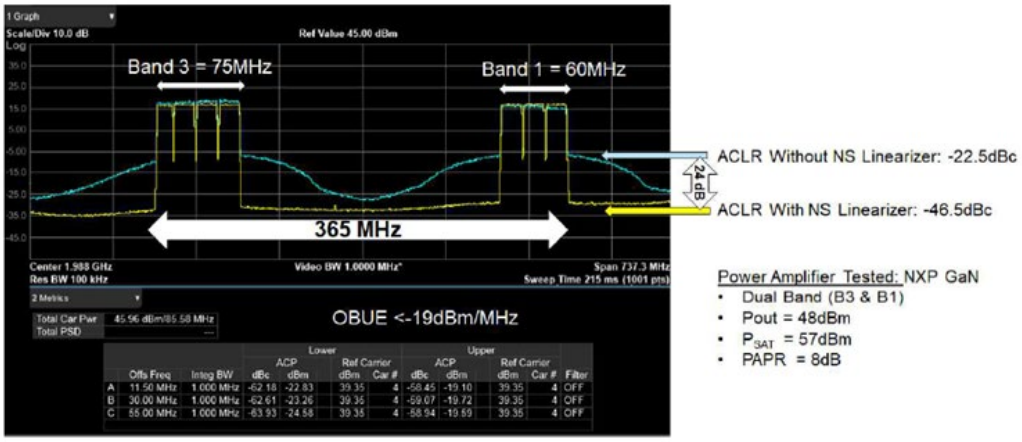

Figure 7: Suppression of inter-band noise and interference in a dual band (bands 1 and 3) signal placed through a single Power Amplifier.

45. On information and belief, Defendant via its operation of the '857 Accused Instrumentalities perform "adjusting the pre-distorted multiple-input signal to compensate for the estimated impairments, wherein generating the pre-distorted multiple-input signal comprises feeding the received multiple-input signal to a matrix of pre-processing cells, comprising, in each of the pre-processing cells of the matrix." For example, the actuators within the '857 Accused Instrumentalities comprise a matrix of pre-processing cells that adjusts the pre-distorted multiple-input to correct for the nonlinear distortion and crosstalk between the different paths.[29]

46. On information and belief, Defendant's operation of the '857 Accused Instrumentalities is such that each of the pre-processing cells of the matrix utilize "nonlinear processing blocks compensating for multiple-input multiple-output nonlinear distortions and an effect of interferences between signal paths of the multiple-input signal and signal paths of the multiple-output signal." For example, the actuator comprises cells, such as the ET actuator and the

[29] Ex. B at 3 ("The estimator is implemented in a small number of logic gates and does not require a dedicated processor."); *see also id.* at 3-4 (explaining the utilization of "real-time estimation…The estimator re-computes coefficients for the actuator in the background and updates them.").

multiband actuator, for nonlinear processing blocks designed to compensate for nonlinear distortion. [30]

47. On information and belief, Defendant's operation of the '857 Accused Instrumentalities is such that each of the pre-processing cells of the matrix utilize "linear processing blocks compensating for the multiple-input multiple-output linear distortions and the effect of interferences between the signal paths of the multiple-input signal and the signal paths of the multiple-output signal." For example, the actuator comprises cells, such as the TX EQL and the DAC CAL, for linear processing blocks designed to compensate for nonlinear distortion. [31]

48. Smart RF has been damaged as a result of Defendant's infringing conduct described in this Count. Defendant is, thus, liable to Smart RF in an amount that adequately compensates Smart RF for Defendant's infringements, which, by law, cannot be less than a reasonable royalty, together with interest and costs as fixed by this Court under 35 U.S.C. § 284.

COUNT III
(INFRINGEMENT OF U.S. PATENT NO. 9,641,204)

49. Plaintiff incorporates the preceding paragraphs herein by reference.

50. Smart RF is the assignee of the '204 Patent, with ownership of all substantial rights, title, and interest in and to the '204 Patent including the right to exclude others and to enforce, sue, and recover damages for past and future infringements.

51. The '204 Patent is valid, enforceable, and was duly and legally issued by the United States Patent and Trademark Office on May 2, 2017, after full and fair examination.

---

[30] *Id.* at 2 (explaining the actuator "integrates into the digital baseband of a System on Chip (SoC) modem to digitally correct for nonlinearities, linear imperfections, interference and load variations produced either on the transmit or receive parts of the RF signal chain such as the Power Amplifier (PA), transceivers, data converters and filters. Figure 1a and 1b show both nonlinear and linear correction IP cores for transmitter and receiver, respectively.").
[31] *Id.*

52. Defendant has and continues to directly infringe one or more claims including at least claim 1 of the ’204 Patent in this District and elsewhere in Texas and the United States through the provision of its cellular network. Such infringement includes, but is not limited to, the making, using, and selling of cellular services that leverage and infringe the inventions of the ’204 Patent. For example, the accused cellular network includes cellular base stations that employ digital pre-distortion techniques covered by the ’204 Patent (collectively, the “’204 Accused Instrumentalities”). For example, on information and belief, the cellular network includes one or more base stations that include hardware and/or software, such as the hardware operating MaxLin DPD technology. The MaxLin DPD technology incorporates NanoSemi Linearizer Core technology. To the extent that the ’204 Accused Instrumentalities do not include MaxLin DPD technology, they include a custom ASIC or other third party solution that includes substantially similar hardware and performs the same operations detailed below.

53. On information and belief, by way of illustration only, Defendant via its operation of the ’204 Accused Instrumentalities satisfied and continues to satisfy each and every element of claim 1 of the ’204 Patent. The ’204 Accused Instrumentalities include a “transmitter.” For example, the ’204 Accused Instrumentalities comprise base stations, such as eNodeBs and gNodeBs that comprise a transmitter for transmitting cellular signals.[32] Further, each of the base stations contain a linearizing amplification solution, that is equipped to use MaxLin DPD technology.

54. On information and belief, the ’204 Accused Instrumentalities used by Defendant include “a power amplifier configured to amplify modulated concurrent multi-band signals to provide amplified concurrent multi-band signals.” For example, the ’204 Accused

[32] *See* https://www.lightreading.com/5g/samsung-s-6-6b-5g-deal-with-verizon-bodes-ill-for-nokia

Instrumentalities include the linearizing hardware within the base stations in Defendant's network. Such linearizing hardware comprises a power amplifier configured to amplify modulated concurrent multi-band signals to provide amplified concurrent multi-band signals.[33]

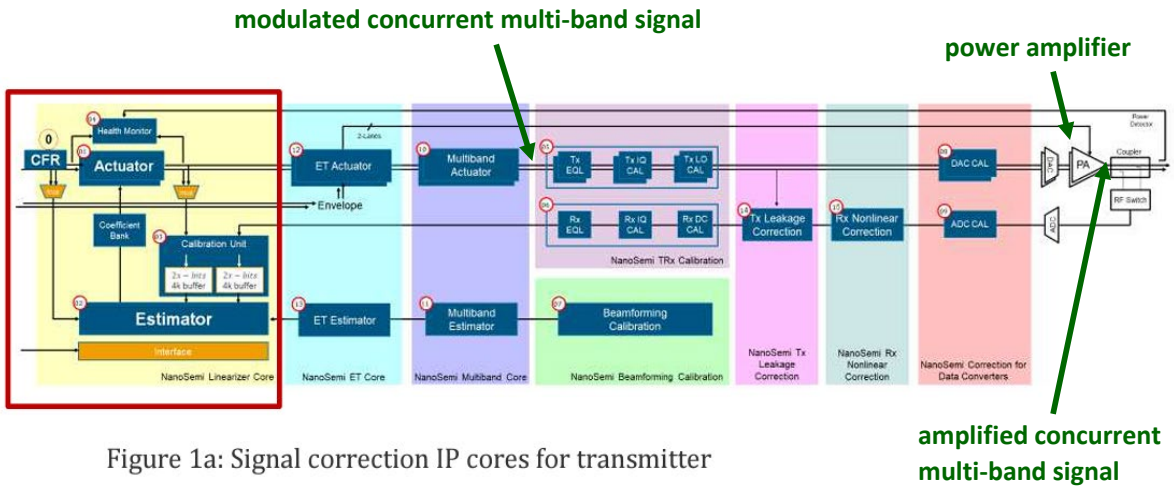

Figure 1a: Signal correction IP cores for transmitter

55. On information and belief, the '204 Accused Instrumentalities used by Defendant include "a concurrent digital multi-band predistortion block configured to effect predistortion of the modulated concurrent multi-band signals to compensate for a non-linearity of the power amplifier." For example, the '204 Accused Instrumentalities include linearizing hardware within the base stations in Defendant's network comprises a concurrent digital multi-band predistortion block configured to effect predistortion of the modulated concurrent multi-band signals to compensate for a non-linearity of the power amplifier.[34]

[33] Ex. B at 2.
[34] *Id*. (explaining that the '204 Accused Instrumentalities comprise a "digital pre-distortion linearizer engine to correct for nonlinear distortions in the transmit path").

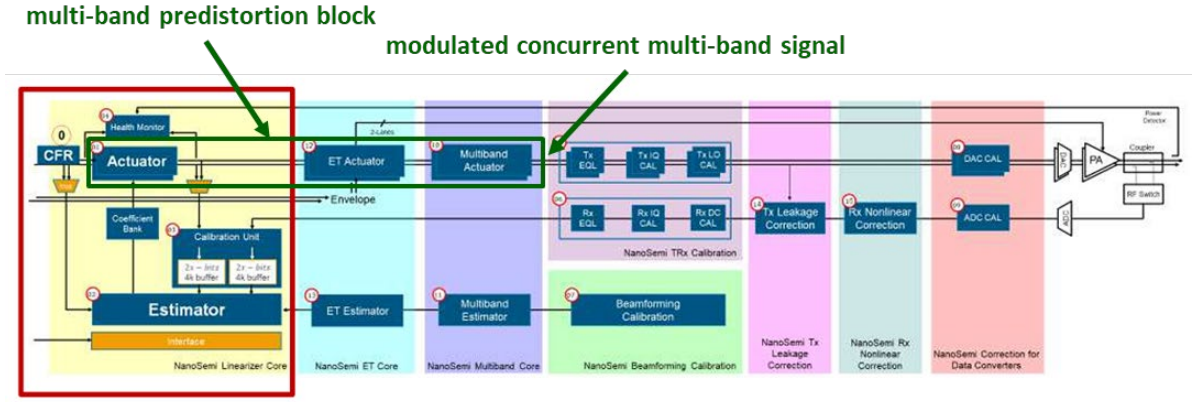

Figure 1a: Signal correction IP cores for transmitter

56. On information and belief, the ’204 Accused Instrumentalities used by Defendant include “a signal observation feedback loop configured to effect concurrent sampling of the amplified concurrent multi-band signals at a subsampling frequency lower than twice a highest signal frequency in the amplified concurrent multi-band signals.” For example, the ’204 Accused Instrumentalities include the feedback loop shown below:[35]

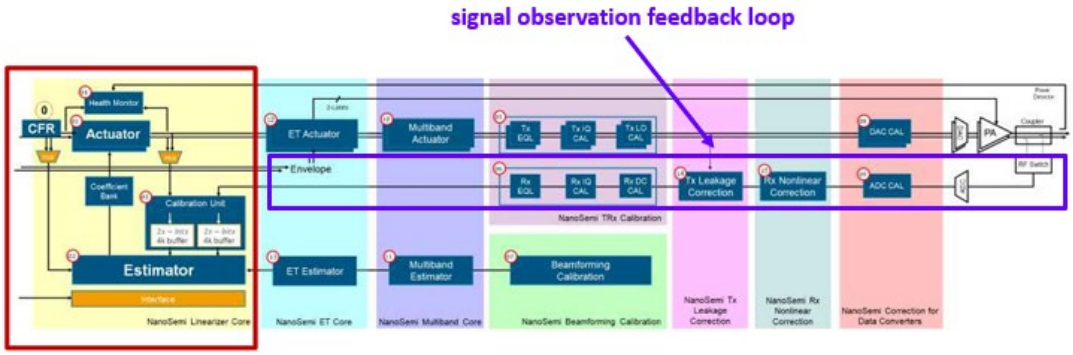

Figure 1a: Signal correction IP cores for transmitter

The feedback loop is configured to effect concurrent sampling of the amplified concurrent multi-band signals at a subsampling frequency lower than twice a highest signal frequency in the amplified concurrent multi-band signals.[36]

[35] *Id*.
[36] *Id*. at 4 (explaining that the feedback sampling can occur “at [the] same or lower sampling rate than DAC”).

57. Smart RF has been damaged as a result of Defendant's infringing conduct described in this Count. Defendant is, thus, liable to Smart RF in an amount that adequately compensates Smart RF for Defendant's infringements, which, by law, cannot be less than a reasonable royalty, together with interest and costs as fixed by this Court under 35 U.S.C. § 284.

COUNT IV

(INFRINGEMENT OF U.S. PATENT NO. 10,958,296)

58. Plaintiff incorporates the preceding paragraphs herein by reference.

59. Smart RF is the assignee of the '296 Patent, with ownership of all substantial rights, title, and interest in and to the '296 Patent including the right to exclude others and to enforce, sue, and recover damages for past and future infringements.

60. The '296 Patent is valid, enforceable, and was duly and legally issued by the United States Patent and Trademark Office on March 23, 2021, after full and fair examination.

61. Defendant has and continues to directly infringe one or more claims including at least claim 1 of the '296 Patent in this District and elsewhere in Texas and the United States through the provision of its cellular network. Such infringement includes, but is not limited to, the making, using, and selling of cellular services that leverage and infringe the inventions of the '296 Patent. For example, the accused cellular network includes cellular base stations that utilize hardware, such as MaxLin DPD technology, that employs digital pre-distortion techniques covered by the '296 Patent (collectively, the "'296 Accused Instrumentalities"). The MaxLin DPD technology incorporates NanoSemi Linearizer Core technology. To the extent that the '296 Accused Instrumentalities do not include MaxLin DPD technology, they include a custom ASIC or other third party solution that includes substantially similar hardware and performs the same operations detailed below.

62. On information and belief, by way of illustration only, Defendant via its operation of the ’296 Accused Instrumentalities performed and continues to perform each and every element of claim 10 of the ’296 Patent. The ’296 Accused Instrumentalities perform a “method for linearizing a transmitter.” For example, the ’296 Accused Instrumentalities comprise a linear transmitter that corrects for nonlinearities in the transmit path.[37]

63. On information and belief, Defendant via its operation of the ’296 Accused Instrumentalities perform “effecting predistortion of concurrent input signals to output concurrent predistorted signals using a digital signal predistorter block including digital baseband signal predistorters.” For example, the ’296 Accused Instrumentalities use a predistortion block to effect predistortion of concurrent input signals shown below resulting in concurrent output signals:[38]

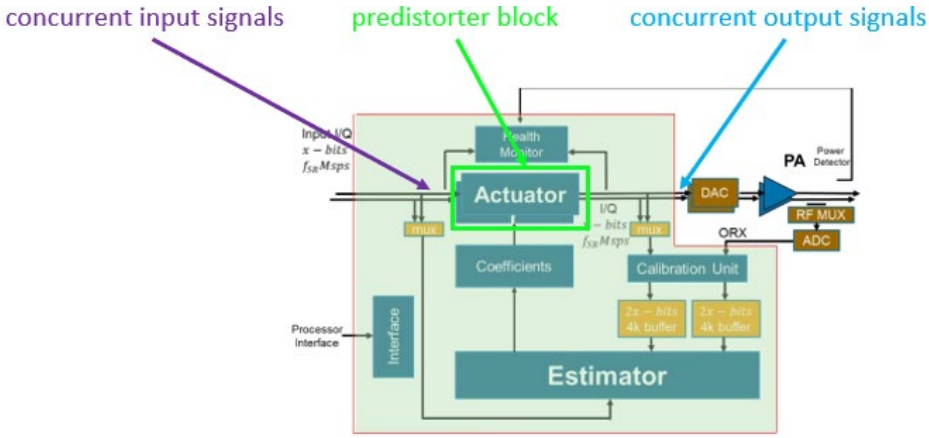

The ’296 Accused Instrumentalities use a digital predistortion linearizer engine to correct for nonlinear distortions in the transmit path that comprises an actuator to apply a predistorted digital signal, estimator to compute and update coefficients used by the actuator.[39]

[37] *Id*. at 2 (explaining that the ’296 Accused Instrumentalities comprise a linearizer that “integrates into the digital baseband of a System on Chip (SoC) modem to digitally correct for nonlinearities, linear imperfections, interference and load variations produced either on the transmit or receive parts of the RF signal chain such as the Power Amplifier (PA), transceivers, data converters and filters”).
[38] *Id*. at 3.
[39] *Id*.

64. On information and belief, Defendant via its operation of the ’296 Accused Instrumentalities perform “amplifying the predistorted signals using a power amplifier block.” For example, the ’296 Accused Instrumentalities use a power amplifier to amplify the predistorted signals:[40]

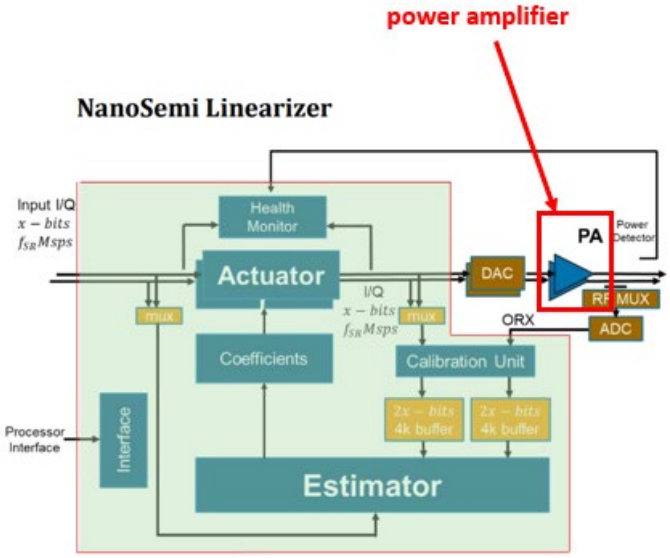

Figure 2: NanoSemi Linearizer™ core with two actuators with one estimator for 2x2 MIMO.

65. On information and belief, Defendant via its operation of the ’296 Accused Instrumentalities perform “receiving in an analyzing and modelling stage first feedback signals taken from an output of the power amplifier, and second feedback signals taken concurrently from the concurrent predistorted signals.” For example, the ’296 Accused Instrumentalities receive in the analyzing and modeling stage (shown in red, which comprises the calibration unit) first feedback signals (shown in green) taken from an output of the power amplifier, and second feedback signals (shown in blue) taken concurrently from the concurrent predistorted signals:[41]

[40] *Id.*
[41] *Id.*

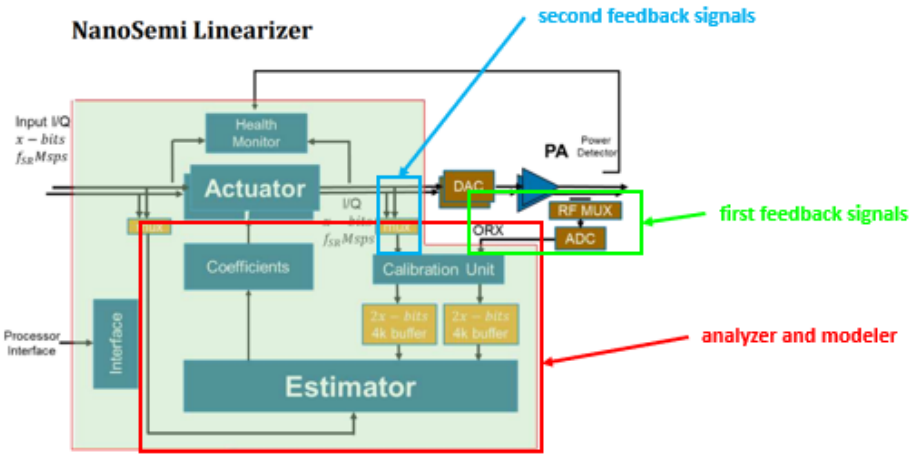

Figure 2: NanoSemi Linearizer™ core with two actuators with one estimator for 2x2 MIMO.

Within the analyzing and modeling stage, the estimator processes the feedback signals concurrently by functioning in real time.[42]

66. On information and belief, Defendant via its operation of the '296 Accused Instrumentalities perform "using the first feedback and the second feedback signals in the analyzing and modelling stage to model a nonlinearity in the power amplifier." For example, the '296 Accused Instrumentalities use the first and second feedback signals in the analyzing and modeling stage to model a nonlinearity of the power amplifier and adjust the coefficients applied to the actuator accordingly. [43]

67. On information and belief, Defendant's operation of the '296 Accused Instrumentalities was such that "wherein the digital baseband signal predistorters are updated by the analyzing and modelling stage." For example, the '296 Accused Instrumentalities update the coefficients used by the actuators based on the modeling of the non-linear distortion.[44]

---

[42] *Id*. (explaining that the '296 Accused Instrumentalities include a "real time Estimator block").
[43] *Id*. at 5 (explaining that the '296 Accused Instrumentalities "characterization process accurately models nonlinear dynamic system, NanoSemi's linearizer has an accurate representation of a very nonlinear but highly power-efficient PA and the entire transmit and receive chain" and that such instrumentalities provide a "solution with a real-time adaptation for a power-sensitive mobile device.").
[44] *Id*. at 4 (explaining that the '296 Accused Instrumentalities "take[] samples from the output of PA and stores 2000-4000 samples in a buffer. The estimator re-computes coefficients for the actuator in the background and

68. Smart RF has been damaged as a result of Defendant's infringing conduct described in this Count. Defendant is, thus, liable to Smart RF in an amount that adequately compensates Smart RF for Defendant's infringements, which, by law, cannot be less than a reasonable royalty, together with interest and costs as fixed by this Court under 35 U.S.C. § 284.

COUNT V

(INFRINGEMENT OF U.S. PATENT NO. 8,078,561)

69. Plaintiff incorporates the preceding paragraphs herein by reference.

70. Smart RF is the assignee of the '561 Patent, with ownership of all substantial rights, title, and interest in and to the '561 Patent including the right to exclude others and to enforce, sue, and recover damages for past and future infringements.

71. The '561 Patent is valid, enforceable, and was duly and legally issued by the United States Patent and Trademark Office on December 13, 2011, after full and fair examination.

72. Defendant has and continues to directly infringe one or more claims including at least claim 7 of the '561 Patent in this District and elsewhere in Texas and the United States through the provision of its cellular network. Such infringement includes, but is not limited to, the making, using, and selling of cellular services that leverage and infringe the inventions of the '561 Patent. For example, the accused cellular network includes cellular base stations that utilize hardware, such as MaxLin DPD technology, that employs digital pre-distortion techniques covered by the '561 Patent (collectively, the "'561 Accused Instrumentalities"). The MaxLin DPD technology incorporates NanoSemi Linearizer Core technology. To the extent that the '561 Accused Instrumentalities do not include MaxLin DPD technology, they include a custom ASIC

updates them. The off-the-air duration is in µs. The estimation time (or convergence time) is ~ms – tens of ms. The estimator is implemented in a small number of logic gates and does not require a dedicated processor.").

or other third party solution that includes substantially similar hardware and performs the same operations detailed below.

73. On information and belief, by way of illustration only, Defendant via its operation of the ’561 Accused Instrumentalities satisfied and continues to satisfy each and every element of claim 7 of the ’561 Patent. The ’561 Accused Instrumentalities comprise a “predistorter for nonlinear wireless system.” For example, the ’561 Accused Instrumentalities comprise a transmitter that corrects for nonlinearities in the transmit path via DPD.[45]

74. On information and belief, the ’561 Accused Instrumentalities used by Defendant comprise “a dynamic nonlinear predistorter module.” For example, the ’561 Accused Instrumentalities use a dynamic nonlinear predistortion block (shown in blue) to effect predistortion of concurrent input signals shown below resulting in concurrent output signals:[46]

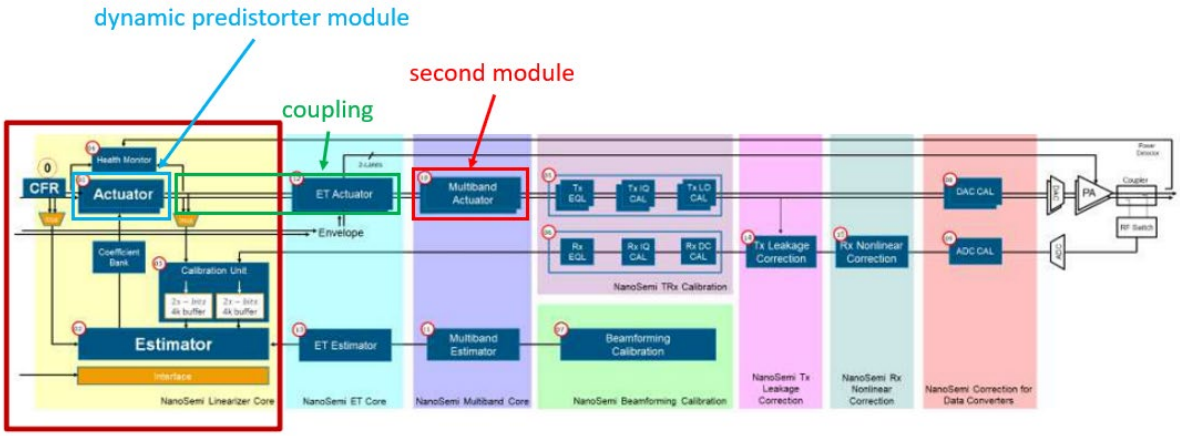

Figure 1a: Signal correction IP cores for transmitter

75. On information and belief, the ’561 Accused Instrumentalities used by Defendant comprise “a second module characterizing static nonlinear characteristics of the nonlinear system,

[45] *Id*. at 3 (explaining that the ’561 Accused Instrumentalities comprise a “pre-distortion linearizer engine to correct for nonlinear distortions in the transmit path”).
[46] *Id*. at 3; *see also id.* at 5 (explaining that the ’561 Accused Instrumentalities model “nonlinear dynamic system, NanoSemi’s linearizer has an accurate representation of a very nonlinear but highly power efficient PA and the entire transmit and receive chain.”).

wherein the second module includes an input and an output." For example, the '561 Accused Instrumentalities use a multiband actuator (shown in red) to characterize static nonlinear characteristics:[47]

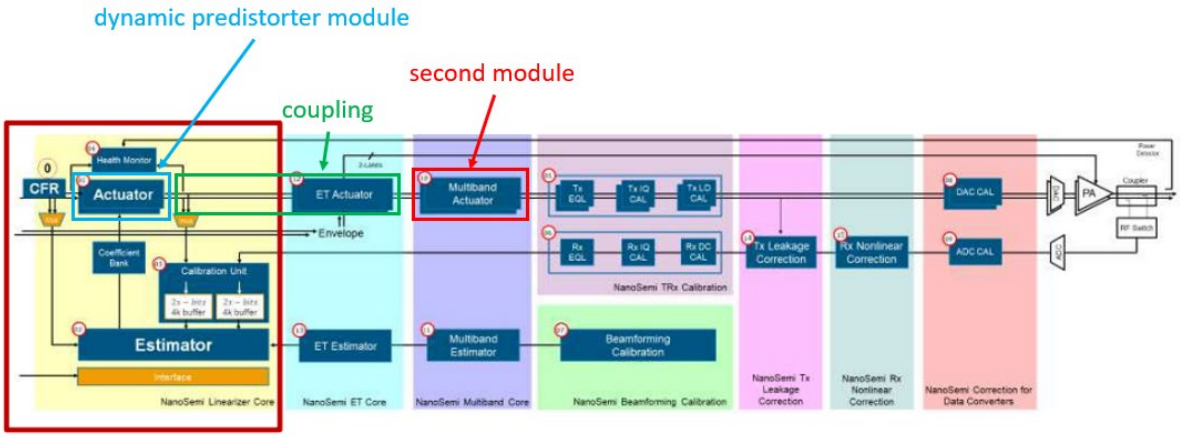

Figure 1a: Signal correction IP cores for transmitter

76. On information and belief, the '561 Accused Instrumentalities used by Defendant comprise are configured such that "wherein the first module is coupled to the second module." For example, the '561 Accused Instrumentalities connect the actuator (shown in blue) to the multiband actuator (shown in red) via coupling (shown in green):[48]

[47] *Id*. at 3.
[48] *Id*.

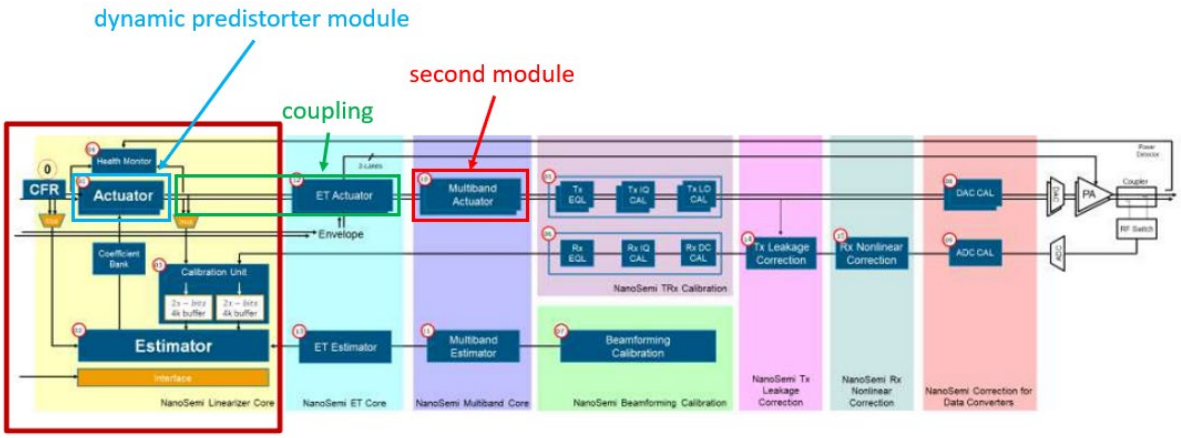

Figure 1a: Signal correction IP cores for transmitter

77. Smart RF has been damaged as a result of Defendant's infringing conduct described in this Count. Defendant is, thus, liable to Smart RF in an amount that adequately compensates Smart RF for Defendant's infringements, which, by law, cannot be less than a reasonable royalty, together with interest and costs as fixed by this Court under 35 U.S.C. § 284.

CONCLUSION

78. Smart RF is entitled to recover from Defendant the damages sustained by Smart RF as a result of Defendant's wrongful acts and infringements in an amount subject to proof at trial, which, by law, cannot be less than a reasonable royalty, together with interest and costs as fixed by this Court.

79. Smart RF has incurred and will incur attorneys' fees, costs, and expenses in the prosecution of this action. The circumstances of this dispute may give rise to an exceptional case within the meaning of 35 U.S.C. § 285, and Smart RF is entitled to recover its reasonable and necessary attorneys' fees, costs, and expenses.

JURY DEMAND

80. Smart RF hereby requests a trial by jury pursuant to Rule 38 of the Federal Rules of Civil Procedure.

PRAYER FOR RELIEF

81. Smart RF respectfully requests that the Court find in its favor and against Defendant, and that the Court grant Smart RF the following relief:

(i) A judgment that one or more claims of the Asserted Patents have been infringed, either literally and/or under the doctrine of equivalents, by Defendant;

(ii) A judgment that Defendant account for and pay to Smart RF all damages and costs incurred by Smart RF because of Defendant's infringing activities and other conduct complained of herein, including an accounting for any sales or damages not presented at trial;

(iii) A judgment that Defendant account for and pay to Smart RF a reasonable, ongoing, post judgment royalty because of Defendant's infringing activities, including continuing infringing activities, and other conduct complained of herein;

(iv) A judgment that Smart RF be granted pre-judgment and post judgment interest on the damages caused by Defendant's infringing activities and other conduct complained of herein;

(v) A judgment that this case is exceptional under the provisions of 35 U.S.C. § 285 and award enhanced damages; and

(vi) Such other and further relief as the Court deems just and equitable.

Dated: March 19, 2024

Respectfully submitted,

/s/ Patrick J. Conroy by permission
Andrea Leigh Fair

Patrick J. Conroy
Texas Bar No. 24012448
Ryan P. Griffin
Texas Bar No. 24053687
Jonathan H. Rastegar
Texas Bar No. 24064043
Nathan L. Levenson
Texas Bar No. 24097992
NELSON BUMGARDNER CONROY PC
2727 N. Harwood St., Suite 250
Dallas, TX 75201
pat@nelbum.com
ryan@nelbum.com
jon@nelbum.com
nathan@nelbum.com

ATTORNEYS FOR PLAINTIFF SMART RF INC.