IN THE UNITED STATES DISTRICT COURT
FOR THE EASTERN DISTRICT OF TEXAS
MARSHALL DIVISION

SMART RF INC., Plaintiff, vs. AT&T MOBILITY LLC, Defendant.	§ § § § § § § § §	Case No. 2:24-cv-00195-JRG (Lead Case) **JURY TRIAL DEMANDED**
SMART RF INC., Plaintiff, vs. CELLCO PARTNERSHIP D/B/A VERIZON WIRELESS, Defendant.	§ § § § § § § § §	Case No. 2:24-cv-00196-JRG (Member Case) **JURY TRIAL DEMANDED**
SMART RF INC., Plaintiff, vs. T-MOBILE US, INC., T-MOBILE USA, INC., SPRINT LLC, SPRINT SOLUTIONS LLC, AND SPRINT SPECTRUM LLC, Defendants.	§ § § § § § § § § § § §	Case No. 2:24-cv-00197-JRG (Member Case) **JURY TRIAL DEMANDED**

DEFENDANTS AT&T MOBILITY, LLC, CELLCO PARTNERSHIP (D/B/A VERIZON WIRELESS) AND T-MOBILE USA, INC.'S SUPPLEMENTAL DISCLOSURE OF INVALIDITY CONTENTIONS UNDER PATENT RULES 3-3 AND 3-4

TABLE OF CONTENTS

I. INTRODUCTION 1

II. PATENT RULES 3-3(A) AND 3-3(B): DISCLOSURE OF IDENTITY OF EACH ITEM OF PRIOR ART THAT ANTICIPATES OR RENDERS OBVIOUS EACH ASSERTED CLAIM; AND WHETHER EACH ITEM OF PRIOR ART ANTICIPATES OR RENDERS OBVIOUS EACH ASSERTED CLAIM 7

A. ANTICIPATION 8

1. The '345 Patent 9

2. The '561 Patent 11

3. The '857 Patent 12

4. The '204 Patent 14

5. The '296 Patent 16

6. Prior Art Systems 18

7. Prior Invention 20

B. OBVIOUSNESS 20

1. The '345 Patent 22

2. The '561 Patent 37

3. The '857 Patent 46

4. The '204 Patent 58

5. The '296 Patent 103

III. PATENT RULE 3-3(C): CLAIM CHARTS IDENTIFYING WHERE THE LIMITATIONS OF THE ASSERTED CLAIMS ARE FOUND IN THE PRIOR ART 147

IV. PATENT RULE 3-3(D): INVALIDITY BASED ON INDEFINITENESS UNDER 35 U.S.C. §112 ¶ 2 OR ENABLEMENT OR WRITTEN DESCRIPTION UNDER 35 U.S.C. § 112 ¶ 1 148

A. INVALIDITY UNDER § 112, ¶ 2: INDEFINITENESS 152

1. The '345 Patent 152

2. The '561 Patent 154

3. The '857 Patent 156

4. The '204 Patent 159

5. The '296 Patent 162

B. INVALIDITY UNDER § 112, ¶ 1: LACK OF ENABLEMENT AND WRITTEN DESCRIPTION 165

1. The '345 Patent 167

2. The ’561 Patent 168
3. The ’857 Patent 170
4. The ’204 Patent 172
5. The ’296 Patent 174
V. INVALIDITY UNDER 35 U.S.C. § 101 176
A. PATENT SUBJECT MATTER INELIGIBILITY CONTENTIONS 176
B. INVALIDITY BASED ON OBVIOUSNESS-TYPE DOUBLE PATENTING 177
VI. P.R. 3-4 DISCLOSURES AND CONTENTIONS 185
VII. OTHER RELEVANT PRIOR ART 186

IPR2025-00692
T-Mobile v. Smart RF
Smart RF's Exhibit 2010
Ex. 2010, Page 3

I. INTRODUCTION

Pursuant to the Court's Docket Control Order (Dkt. 41) and Patent Rules 3-3 and 3-4, Defendants AT&T Mobility, LLC ("AT&T"), Cellco Partnership, d/b/a Verizon Wireless ("Verizon"), and T-Mobile USA, Inc., ("T-Mobile," and together with AT&T and Verizon, "Defendants") hereby disclose and supplement their Invalidity Contentions with respect to U.S. Patent No. 7,035,345 ("the '345 Patent); U.S. Patent No. 8,078,561 ("the '561 Patent); U.S. Patent No. 8,767,857 ("the '857 Patent); U.S. Patent No. 9,641,204 ("the '204 Patent); and U.S. Patent No. 10,958,296 ("the '296 Patent) (collectively, the "Asserted Patents"). Defendants contend that each of the Asserted Claims (as defined below) is invalid under 35 U.S.C. §§ 101, 102, 103, and/or 112 for at least the reasons provided below.[1]

The Invalidity Contentions set forth below are based on information currently known to Defendants, including Smart RF's May 15, 2024, Nov. 24, 2024, Dec. 13, 2024, and Feb. 27, 2025, Infringement Contentions. In the event that Smart RF is granted leave to amend its Infringement Contentions or its infringement theories, these Invalidity Contentions may change, and Defendants reserve the right to amend or supplement these Invalidity Contentions.

Discovery in this case is still in its early stages, and Defendants' investigation and analysis of Smart RF, Inc.'s ("Smart RF" or "Plaintiff") claims and Defendants' defenses are ongoing. Defendants also have not yet obtained any discovery from the named inventors identified on the Asserted Patents or the individuals involved in prosecuting the respective applications leading to the Asserted Patents, nor have Defendants completed discovery from third parties that may have evidence related to prior art. Defendants therefore reserve the right to supplement or modify these

[1] All Asserted Patents have priority dates prior to March 16, 2013. Accordingly, all references to 35 U.S.C. § 102 refer to the pre-AIA version of that statute defining prior art.

Invalidity Contentions based on further discovery, evaluation of the scope and content of the prior art, or changes in any of Plaintiff's Asserted Claims or infringement contentions.

Defendants incorporate by reference all other bases for invalidity identified in Defendants' Answers, Initial Disclosures, and interrogatory responses in this matter, and the prosecution or post-grant review (e.g., during *Inter Partes* Review) of the Asserted Patents and all related patents and/or patent applications, including but not limited to statements made by both the patent applicant and patent examiners, and references cited therein. Specifically, Defendants incorporate by reference all bases for invalidity set forth in IPR2025-00612; IPR2025-00691; IPR2025-00692; and IPR2025-00727.

Defendants further incorporate by reference all admissions regarding the Asserted Patents including, but not limited to, admissions in the specification of the Asserted Patents, and the prosecution or post-grant review of the Asserted Patents and related patents and/or patent applications. Defendants further incorporate any and all invalidity contentions previously served or subsequently served in any related litigation, or served in any prior litigation involving the Asserted Patents and related patents (collectively, the "Other Actions").

The Court has not yet issued any claim construction rulings. Defendants' Invalidity Contentions are not intended to, and do not, reflect any acquiescence or concession by Defendants as to the proper scope or construction of the Asserted Claims. To the extent that these Invalidity Contentions reflect any claim construction consistent with Plaintiff's infringement contentions or proposed claim constructions, no inference is intended, nor should any be drawn that Defendants agree with Plaintiff's claim constructions, and Defendants expressly reserve the right to contest such constructions. Moreover, Defendants' Invalidity Contentions should not in any way be read as an admission that any of their respective products or technology infringes any claim of any

Asserted Patent; Defendants specifically deny such infringement. Similarly, nothing stated in this document or accompanying claim charts should be treated as an admission or suggestion that the Asserted Claims are not invalid (1) under 35 U.S.C. § 112 for being indefinite, failing to satisfy the written description requirement, or failing to satisfy the enablement requirement; or (2) under 35 U.S.C. § 101 for failing to claim eligible subject matter.

Depending on the Court's construction of the Asserted Claims of the Asserted Patents, and/or positions that Plaintiff or its expert witness(es) may take concerning claim interpretation, infringement, and/or invalidity issues, the asserted prior art references may be of greater or lesser relevance. Given this uncertainty, the charts may reflect alternative applications of the prior art against the Asserted Claims. Thus, no chart or position taken by Defendants should be construed as an admission or a waiver of any particular construction of any claim term. Defendants also reserve the right to challenge any of the claim terms under 35 U.S.C. § 112, including by arguing that they are indefinite, not supported by the written description, and/or not enabled.

As shown below, Smart RF has asserted that the Asserted Claims are entitled to priority dates that precede the earliest effective filing date of the Asserted Patents:

- '345 Patent: at least as early as October 1999;
- '561 Patent: at least as early as December 2005;
- '857 Patent: at least as early as September 2008;
- '204 Patent: at least as early as February 2010; and
- '296 Patent: at least as early as February 2010.

For each patent above, Defendants dispute that Smart RF may appropriately rely upon any priority date earlier than that listed on the Asserted Patents and reserve the right to rely on prior art dated after Smart RF's claimed priority date, particularly to the extent Smart RF fails to prove

entitlement to the above priority dates for any Asserted Claim. To the extent Smart RF in the future seeks and is granted leave to amend its disclosures in an attempt to establish an earlier effective date, Defendants reserve the right to amend these contentions in response, including by disclosing additional prior art or earlier versions or evidence of the prior art disclosed herein.

Defendants challenge the sufficiency of Smart RF's Infringement Contentions. In particular, Smart RF's Infringement Contentions fail to disclose its infringement theories with this Court's requisite specificity with respect to the claims of the Asserted Patents; indeed, Smart RF's Infringement Contentions fail to provide any information regarding why it believes the Accused Instrumentalities practice virtually any element of any of the claims of the Asserted Patents.

The prior art references identified herein may disclose the limitations of the Asserted Claims either expressly or inherently, or may be relied upon to show the state of the art in the relevant time frame. The discussion of the different references herein and in the attached claim charts may reflect alternative applications of the prior art against the Asserted Claims. Comments on one item of prior art should not be construed as necessarily applying to any of the other prior art discussed herein. For example, the suggested obviousness combinations are provided in the alternative to Defendants' anticipation contentions and are not to be construed to suggest that any reference included in the combinations is not by itself anticipatory. To the extent that Plaintiff contends that limitations of the Asserted Claims are not disclosed in the anticipatory prior art identified herein, Defendants reserve the right to identify other references and combinations that address those arguments, and reserve the right to so modify, amend, or supplement these Invalidity Contentions.

Defendants' citations to specific portions of the prior art references relied upon herein should not be construed to mean that other portions of the prior art references are not relevant to

the invalidity of the Asserted Claims. Defendants reserve the right to rely on the entirety of any or all of the prior art references (whether or not claim-charted) as a basis for asserting invalidity of the Asserted Patents, and/or as necessary to supplement its contentions with additional citations and evidence.

Defendants reserve the right to rely on any prior art system referenced, embodied, or described in any of the prior art references identified herein, or which embodies any of the prior art references identified herein. In addition, Defendants reserve the right to rely on any prior art system that may have been developed or deployed by their infrastructure vendors, including without limitation Ericsson, Nokia and/or Samsung.

Moreover, Defendants reserve the right to rely on inventor admissions concerning the scope of the prior art relevant to the asserted patents found in, *inter alia*, the prosecution histories or post-grant review proceedings of the Asserted Patents and related patents and/or patent applications, any testimony or declarations of the named inventors concerning the Asserted Patents or related patents, and any papers or evidence submitted by Smart RF in connection with this litigation, any other pending or future litigation brought by Smart RF involving the Asserted Patents or related patents. Defendants also may establish what was known to a person having ordinary skill in the art through treatises, published industry standards other publications, products, and/or testimony.

The prior art references listed herein and in the accompanying claim charts may disclose the elements of the Asserted Claims explicitly and/or inherently. The prior art references are also relevant for their showing of the state of the art and reasons and motivations for making improvements, additions, and combinations. The suggested obviousness combinations are provided in the alternative to Defendants' anticipation contentions and are not to be construed to

suggest that any reference is not itself anticipatory.

Further, the combinations of prior art references contained herein demonstrating the obviousness of the Asserted Patents under 35 U.S.C. § 103 are merely exemplary and are not intended to be exhaustive. All such combinations are intended to include and are in view of the knowledge of a person of ordinary skill in the art. Additional obviousness combinations of the identified prior art references are possible, and Defendants reserve the right to use any such combination(s) in this Action. In particular, Defendants are currently unaware of the extent, if any, to which Smart RF will contend that limitations of any particular claim(s) is/are not disclosed in the art that Defendants have identified as anticipatory. To the extent that Smart RF does so, Defendants reserve the right to identify other evidence or references that anticipate or render obvious the particular claim(s).

Defendants' identification in the prior art of claim elements recited in the preamble of any claims is not intended to indicate that any such preamble is limiting. All such disclosures are made only to the extent the preamble is determined to be limiting.

As described above, Defendants may diligently seek discovery from third parties, including infrastructure vendors Ericsson, Nokia and/or Samsung, to demonstrate the inventions were known or used by others under 35 U.S.C. § 102(a), in public use and/or on-sale under 35 U.S.C. § 102(b), and/or earlier invention of the claimed inventions under 35 U.S.C. § 102(g). Defendants may therefore modify, amend, and/or supplement these Invalidity Contentions if and when further information becomes available.

Additionally, Defendants incorporate by reference into these contentions every claim element cross-referenced in Smart RF's Infringement Contentions. For any element in Smart RF's Infringement Contentions for which Smart RF refers to the information from one or more other

elements (whether in the same or a different patent), Defendants incorporate by reference the same cross-reference for these contentions.

Subject to the foregoing statements and qualifications, Defendants provide the following disclosures.

II. PATENT RULES 3-3(A) and 3-3(B): DISCLOSURE OF IDENTITY OF EACH ITEM OF PRIOR ART THAT ANTICIPATES OR RENDERS OBVIOUS EACH ASSERTED CLAIM; AND WHETHER EACH ITEM OF PRIOR ART ANTICIPATES OR RENDERS OBVIOUS EACH ASSERTED CLAIM

In the below subsections, Defendants identify each item of prior art that anticipates and/or renders obvious each Asserted Claim. The prior art identified herein also includes items that may be relied upon to show knowledge or use by others under 35 U.S.C. § 102(a), public use or on-sale bar under § 102(b), prior filing under § 102(e), derivation or prior inventorship under §§ 102(f) and (g), and the identity of any person or entity involved in and the circumstances surrounding the making of the invention before the application for each Asserted Patent. The prior art cited and discussed below and in the attached claim charts anticipates and/or renders obvious, alone or in combination with the below-disclosed references, one or more of the Asserted Claims.

Defendants have provided limitation-by-limitation claim charts demonstrating where each limitation of the Asserted Claims of the Asserted Patents is found in the prior art. These claim charts are based on Defendants' current understanding of the terms and limitations of Plaintiff's Asserted Claims, Defendants' current understanding of the claim constructions underlying Plaintiff's infringement contentions, as well as Plaintiff's proposed claim constructions. To the extent any claim limitation is deemed not to be disclosed or otherwise satisfied by a given item of prior art, Defendants contend that the difference, if any, between the claim and such prior art would have been within the knowledge of and obvious to one of ordinary skill in the relevant art at the time of the alleged invention, such that the claimed invention would have been obvious both in

light of the prior art item alone and/or in light of a combination of prior art.

Defendants have provided exemplary citations to each prior art item relied upon for each limitation of each Asserted Claim. These citations represent neither every location where a particular claim limitation is found in the prior art nor every instance in which such prior art satisfies the claim limitation. Rather, Defendants reserve the right to rely on additional, or different, portions or aspects of the prior art other than those specifically cited in the claim charts provided herewith. Moreover, Defendants may rely on other portions or aspects of the prior art as aids to understanding and interpreting the portions that are cited. Where Defendants cite a particular figure in a prior art reference, such citations should be understood to encompass the caption and description of the figure and any text relating to the figure, in addition to the figure itself. Conversely, where a cited portion of text refers to a figure, the citation should be understood to include the figure as well. Defendants may additionally rely on information incorporated by reference in the identified prior art to provide additional support for Defendants' contention for a given claim limitation.

Defendants reserve the right to supplement and/or amend these contentions based on the herein-identified prior art considered individually or in combination with additional information learned during discovery and/or in light of claim construction developments in this case. Defendants may also become aware of additional prior art as its investigation and discovery in this case progress, and Defendants reserve the right to use any such prior art to demonstrate that the Asserted Claims of the Asserted Patents are invalid.

A. Anticipation

Defendants contend that the prior art references identified below are anticipatory references under pre-AIA 35 U.S.C. §§ 102(a), (b), (e), (f) and/or (g). To the extent any of the anticipatory references were embodied in actual systems, such systems may constitute prior art based upon

which Defendants will continue to develop further invalidity defenses as discovery and Defendants' investigation progress.

Defendants additionally reserve the right, to the extent permitted by the Court and the applicable statutes and rules, to assert and/or supplement its assertions that the Asserted Claims are invalid under pre-AIA 35 U.S.C. § 102(f) in the event Defendants obtain additional evidence that the named inventors of the Asserted Patents did not invent (either alone or in conjunction with others) the subject matter claimed in the Asserted Patents. Should Defendants obtain such evidence, it will provide the name of the person(s) from whom, and the circumstances under which, the alleged invention or any part of it was derived.

Defendants further intend to rely on admissions of the named inventors and Smart RF concerning the prior art, including statements found in the Asserted Patents, their prosecution histories, and/or other related patents or patent applications, any deposition testimony, and the papers filed and any evidence submitted by Smart RF in conjunction with this action.

Finally, Defendants may rely on testimony from the authors or named inventors on any of the prior art references listed above.

1. The '345 Patent

Each prior art item below anticipates the Asserted Claims of the '345 Patent by reason of its status as a publication and/or patent disclosing, or a system on sale and/or in public knowledge or use in the United States embodying, the claimed invention before Plaintiff's asserted priority date of the '345 Patent.[2] Thus, each reference below constitutes anticipatory prior art under one

[2] Defendants contend that Plaintiff is not entitled to the priority date it has asserted, and is investigating further. Defendants reserve the right to challenge Plaintiff's claimed priority date. Defendants further reserve the right to amend and/or supplement their Invalidity Contentions if any of the '345 Patent claims are subject to a different priority date.

or more provisions of pre-AIA 35 U.S.C. §§ 102(a), (b), (e), (f) or (g). For each item of anticipatory prior art, Defendants have attached an exhibit setting forth a claim chart identifying where each claim limitation is found in the cited prior art. For purposes of derivation or prior inventorship under §§ 102(f) and (g), Defendants have provided in each claim chart the information currently known to Defendants regarding the identifies of the persons or entities involved in and the circumstances surrounding the making of the invention before the applicant(s) for the '345 Patent. The prior inventors and persons or entities who made and used the inventions include the named inventors and original assignees of the asserted prior art patents; the authors of the asserted prior art publications; and the individuals and entities who made the asserted prior art systems.

Table A. Prior Art to the '345 Patent

Chart	Prior Art Reference	Country of Origin	Publication/ Issue Date
A-1	U.S. Patent No. 5,867,065 ("Leyendecker")	U.S.	Feb. 2, 1999
A-2	U.S. Patent No. 5,892,397 ("Belcher")	U.S.	Apr. 6, 1999
A-3	U.S. Patent No. 6,693,974 ("Jin")	U.S.	Aug. 5, 1999
A-4	U.S. Patent No. 7,409,007 ("Johnson")	U.S.	Sep. 14, 1999
A-5	Jeckeln, E., et al., *Linearization of Microwave Emitters Using an Adaptive Digital Predistorter*, IEEE, 27th European Microwave Conference (2007) ("Jecklen").	U.S.	Sep. 1997
A-6	U.S. Patent No. 5,949,283 ("Proctor")	U.S.	Sep. 7, 1999
A-7	U.S. Patent No. 6,600,792 ("Antonio")	U.S.	June 26, 1998
A-8	Ghaderi, M, et al., *Power Amplifier Adaptive Linearization Using Predistortion with Polynomial Functions*, IEEE, 22nd European Microwave Conference, (1992).	U.S.	Sep. 1992

A-9	U.S. Patent No. 6,072,364 ("Jeckeln 364")	U.S.	June 17, 1997

2. The '561 Patent

Each prior art item below anticipates the Asserted Claims of the '561 Patent by reason of its status as a publication and/or patent disclosing, or a system on sale and/or in public knowledge or use in the United States embodying, the claimed invention before Plaintiff's asserted priority date of the '561 Patent.[3] Thus, each reference below constitutes anticipatory prior art under one or more provisions of pre-AIA 35 U.S.C. §§ 102(a), (b), (e), (f) or (g). For each item of anticipatory prior art, Defendants have attached an exhibit setting forth a claim chart identifying where each claim limitation is found in the cited prior art. For purposes of derivation or prior inventorship under §§ 102(f) and (g), Defendants have provided in each claim chart the information currently known to Defendants regarding the identifies of the persons or entities involved in and the circumstances surrounding the making of the invention before the applicant(s) for the '561 Patent. The prior inventors and persons or entities who made and used the inventions include the named inventors and original assignees of the asserted prior art patents; the authors of the asserted prior art publications; and the individuals and entities who made the asserted prior art systems.

Table B. Prior Art to the '561 Patent

Chart	Prior Art Reference	Country of Origin	Publication/ Issue Date
B-1	Liu, Taijin, et al., *Deembedding Static Nonlinearities and Accurately Identifying and Modeling Memory Effects in Wide-Band Transmitters*, IEEE Transactions on Microwave	U.S.	November 2005

[3] Defendants contend that Plaintiff is not entitled to the priority date it has asserted, and is investigating further. Defendants reserve the right to challenge Plaintiff's claimed priority date. Defendants further reserve the right to amend and/or supplement their Invalidity Contentions if any of the '561 Patent claims are subject to a different priority date.

	Theory and Techniques, Col. 53, No. 11 (Nov. 2005) ("Liu")		
B-2	U.S. Patent Application No. 2004/0179629 A1 ("Song")	U.S.	Sep. 16, 2004
B-3	U.S. Patent Application No. 2002/0171485 A1 ("Cova")	U.S.	Nov. 21, 2002
B-4	Ding, Lei, *Digital Predistortion of Power Amplifiers for Wireless Applications*, Georgia Institute of Technology, School of Electrical and Computer Engineering (March 2004) ("Ding")	U.S.	March 2004
B-5	International Publication No. WO 2001/048998 A1 ("Griph")	PCT	July 5, 2001
B-6	Hammi, Oualid, *Linéarisation par prédistorsion numérique en sous bandes d'un transmetteur en bande S pour les applications cellulaires de 3G*, Polytechnique Montréal (2004) ("Hammi").	Canada	2004
B-7	U.S. Patent No. 7,415,252 ("Jelonnek")	U.S.	Nov. 18, 2004

3. The '857 Patent

Each prior art item below anticipates the Asserted Claims of the '857 Patent by reason of its status as a publication and/or patent disclosing, or a system on sale and/or in public knowledge or use in the United States embodying, the claimed invention before Plaintiff's asserted priority date of the '857 Patent.[4] Thus, each reference below constitutes anticipatory prior art under one or more provisions of pre-AIA 35 U.S.C. §§ 102(a), (b), (e), (f) or (g). For each item of anticipatory prior art, Defendants have attached an exhibit setting forth a claim chart identifying where each claim limitation is found in the cited prior art. For purposes of derivation or prior

[4] Defendants contend that Plaintiff is not entitled to the priority date it has asserted, and is investigating further. Defendants reserve the right to challenge Plaintiff's claimed priority date. Defendants further reserve the right to amend and/or supplement its Invalidity Contentions if any of the '857 Patent claims are subject to a different priority date.

inventorship under §§ 102(f) and (g), Defendants have provided in each claim chart the information currently known to Defendants regarding the identifies of the persons or entities involved in and the circumstances surrounding the making of the invention before the applicant(s) for the ’857 Patent. The prior inventors and persons or entities who made and used the inventions include the named inventors and original assignees of the asserted prior art patents; the authors of the asserted prior art publications; and the individuals and entities who made the asserted prior art systems.

Table C. Prior Art to the ’857 Patent

Chart	Prior Art Reference	Country of Origin	Publication/ Issue Date
C-1	U.S. Patent App. Publ. No. 2005/0163251 A1 (“McCallister”)	U.S.	July 28, 2005
C-2	Japanese Pat. App. No. 2006/345066 A (“Hibino”)	Japan	Dec. 21, 2006
C-3	U.S. Patent No. 6,798,843 (“Wright”)	U.S.	Sept. 28, 2004
C-4	International Pat. App. Publ. No. WO 2005/076554A1 (“Sadri”)	PCT	Feb. 5, 2004
C-5	U.S. Patent No. 7,415,252 (“Jelonnek”)	U.S.	Nov. 18, 2004
C-6	Japanese Pat. App. No. 2006/135543A (“Uchida”)	Japan	Nov. 4, 2004
C-7	KR 2007/0061746A (“Ho”)	South Korea	Nov. 24, 2006
C-8	Cendrillon, et al., *A Near-Optimal Linear Crosstalk Precoder for VDSL* (“Cendrillon 1”)	U.S.	Dec. 22, 2004
C-9	Cendrillon, et al., *The Linear Zero-Forcing Crosstalk Canceler is Near-optimal in DSL Channels* (“Cendrillon 2”)	U.S.	2004
C-10	Cendrillon, et al., *Partial crosstalk precompensation in downstream VDSL*	U.S.	Apr. 22, 2004

	("Cendrillon 3")[5]		
C-11	U.S. Patent No. 8,213,880 ("Van Zelm")	U.S.	October 15, 2008

4. The '204 Patent

Each prior art item below anticipates the Asserted Claims of the '204 Patent by reason of its status as a publication and/or patent disclosing, or a system on sale and/or in public knowledge or use in the United States embodying, the claimed invention before Plaintiff's asserted priority date of the '204 Patent.[6] Thus, each reference below constitutes anticipatory prior art under one or more provisions of pre-AIA 35 U.S.C. §§ 102(a), (b), (e), (f) or (g). For each item of anticipatory prior art, Defendants have attached an exhibit setting forth a claim chart identifying where each claim limitation is found in the cited prior art. For purposes of derivation or prior inventorship under §§ 102(f) and (g), Defendants have provided in each claim chart the information currently known to Defendants regarding the identifies of the persons or entities involved in and the circumstances surrounding the making of the invention before the applicant(s) for the '204 Patent. The prior inventors and persons or entities who made and used the inventions include the named inventors and original assignees of the asserted prior art patents; the authors of the asserted prior art publications; and the individuals and entities who made the asserted prior art systems.

Table D. Prior Art to the '204 Patent

Chart	Prior Art Reference	Country of Origin	Publication/ Issue Date
D-1	"Adaptive Digital Feedback Predistortion	U.S.	May, 2007

[5] The "Cendrillon References" include Cendrillon 1, Cendrillon 2 and Cendrillon 3.

[6] Defendants contend that Plaintiff is not entitled to the priority date it has asserted, and is investigating further. Defendants reserve the right to challenge Plaintiff's claimed priority date. Defendants further reserve the right to amend and/or supplement their Invalidity Contentions if any of the '204 Patent claims are subject to a different priority date.

	Technique for Linearizing Power Amplifiers," to Y.Y. Woo et al. (May 2007) ("Woo")		
D-2	"Linearization of power amplifiers by means of digital predistortion" to Nazim Ceylan (2006) ("Ceylan")	Germany	2006
D-3	U.S. Patent No. 8,260,143 to Gupta et al. ("Gupta")	U.S.	September 17, 2009
D-4	"A new approach for concurrent Dual-Band IF Digital PreDistortion: System design and analysis," to Cidronali et al.(2008) ("Cidronali")	U.S.	2008
D-5	Chinese Patent Publication No. CN101286963 to Wang et al. ("Wang")	China	October 15, 2008
D-6	U.S. Patent No. 7,336,716 to Maltsev et al.("Maltsev")	U.S.	February 26, 2008
D-7	International Pat. App. Publ. No. WO2012/129768 to Peroulas et al. ("Peroulas")	PCT	October 4, 2012
D-8	U.S. Patent Publication No. 2003/0053552 to Hongo et al. ("Hongo")	U.S.	March 20, 2003
D-9	U.S. Patent No. 8,873,674 to Kim et al. ("Kim")	U.S.	October 28, 2014
D-10	"Crossover Digital Predistorer for the Compensation of Crosstalk and Nonlinearity in MIMO Transmitters" to Bassam et al., IEEE (May 2009) ("Bassam")	U.S.	May, 2009
D-11	"Advanced Microwave Circuits and Systems" to Zhurbenko (April 2010) ("Zhurbenko")	Croatia	April, 2010
D-12	"Digital Predistortion Reference Design" by the Altera Corporation (July 2003) ("Altera")	U.S.	July, 2003
D-13	"Optimized Multistandard RF Subsampling Receiver Architecture" to Barrak et al. (June 2009) ("Barrak")	U.S.	June, 2009
D-14	U.S. Patent No. 7,415,252 to Jelonnek et al. ("Jelonnek")	U.S.	November 18, 2004
D-15	Chinese Patent Publication No. CN201878098U to Fang et al. ("Fang")	China	June 22, 2011
D-16	U.S. Patent Publication No. 2007/0216554 to Ahmed ("Ahmed")	U.S.	September 20, 2007
D-17	U.S. Patent Publication No. 2005/016325 ("McCallister")	U.S.	July 28, 2005
D-18	U.S. Patent Publication No. 2003/0179830 ("Eidson")	U.S.	September 25, 2003
D-19	U.S. Patent Publication No. 2005/0242876 to Obernosterer ("Obernosterer")	U.S.	November 3, 2005
D-20	U.S. Patent No. 7,035,345 to Jeckeln ("Jeckeln '345")	U.S.	April 25, 2006
D-21	"Open-Loop Digital Predistorter for RFPower Amplifiers Using Dynamic DeviationReduction-	U.S.	July, 2008

	Based Volterra Seriesto" to Zhu et al.("Zhu")		
D-22	"Design of Digital Predistorters for Multi-Band Signals" to Choi et al.("Choi")	U.S.	December, 2010
D-23	U.S. Patent No. 8,767,857 to Bassam et al. ("Bassam '857")	U.S.	December 16, 2010
D-24	EP2146474 to Xin ("Xin")	EP	January 20, 2010
D-25	EP2040375 to Jelonnek ("Jelonnek '375)	EP	March 25, 2009
D-26	U.S. Patent No. 8,576,943 to Kilambi et al. ("Kilambi")	U.S.	March 14, 2013
D-27	U.S. Patent No. 6,999,523 to Posti ("Posti")	U.S.	February 21, 2002

5. The '296 Patent

Each prior art item below anticipates the Asserted Claims of the '296 Patent by reason of its status as a publication and/or patent disclosing, or a system on sale and/or in public knowledge or use in the United States embodying, the claimed invention before Plaintiff's asserted priority date of the '296 Patent.[7] Thus, each reference below constitutes anticipatory prior art under one or more provisions of pre-AIA 35 U.S.C. §§ 102(a), (b), (e), (f) or (g). For each item of anticipatory prior art, Defendants have attached an exhibit setting forth a claim chart identifying where each claim limitation is found in the cited prior art. For purposes of derivation or prior inventorship under §§ 102(f) and (g), Defendants have provided in each claim chart the information currently known to Defendants regarding the identifies of the persons or entities involved in and the circumstances surrounding the making of the invention before the applicant(s) for the '296 Patent. The prior inventors and persons or entities who made and used the inventions include the named inventors and original assignees of the asserted prior art patents; the authors of the asserted prior art publications; and the individuals and entities who made the asserted prior art

[7] Defendants contends that Plaintiff is not entitled to the priority date it has asserted, and is investigating further. Defendants reserve the right to challenge Plaintiff's claimed priority date. Defendants further reserve the right to amend and/or supplement their Invalidity Contentions if any of the '296 Patent claims are subject to a different priority date.

systems.

Table E. Prior Art to the ’296 Patent

Chart	Prior Art Reference	Country of Origin	Publication/ Issue Date
E -1	"Adaptive Digital Feedback Predistortion Technique for Linearizing Power Amplifiers," to Y.Y. Woo et al. (May 2007) (“Woo”)	U.S.	May, 2007
E-2	“Linearization of power amplifiers by means of digital predistortion” to Nazim Ceylan (2006) (“Ceylan”)	Germany.	2006
E-3	U.S. Patent No. 8,260,143 to Gupta et al. (“Gupta”)	U.S.	September 17, 2009
E-4	"A new approach for concurrent Dual-Band IF Digital PreDistortion: System design and analysis," to Cidronali et al.(2008) (“Cidronali”)	U.S.	2008
E-5	Chinese Patent Publication No. CN101286963 to Wang et al. (“Wang”)	China	October 15, 2008
E-6	U.S. Patent No. 7,336,716 to Maltsev et al.(“Maltsev”)	U.S.	February 26, 2008
E-7	WO2012/129768 to Peroulas et al. (“Peroulas”)	PCT	October 4, 2012
E-8	U.S. Patent Publicaiton No. 2003/0053552 to Hongo et al. (“Hongo”)	U.S.	March 20, 2003
E-9	U.S. Patent No. 8,873,674 to Kim et al. (“Kim”)	U.S.	October 28, 2014
E-10	“Crossover Digital Predistorer for the Compensation of Crosstalk and Nonlinearity in MIMO Transmitters” to Bassam et al. (May 2009) (“Bassam”)	U.S.	May, 2009
E-11	“Advanced Microwave Circuits and Systems” to Zhurbenko (April 2010) (“Zhurbenko”)	Croatia	April, 2010
E-12	“Digital Predistortion Reference Design” by the Altera Corporation (July 2003) (“Altera”)	U.S.	July, 2003
E-13	“Optimized Multistandard RF Subsampling Receiver Architecture” to Barrak et al. (June 2009) (“Barrak”)	U.S.	June, 2009
E-14	U.S. Patent No. 7,415,252 to Jelonnek et al. (“Jelonnek”)	U.S.	November 18, 2004
E-15	Chinese Patent Publication No. CN201878098U to Fang et al. (“Fang”)	China	June 22, 2011
E-16	U.S. Patent Publication No. 2007/0216554 to Ahmed (“Ahmed”)	U.S.	September 20, 2007
E-17	U.S. Patent Publication No. 2005/016325 (“McCallister”)	U.S.	July 28, 2005
E-18	U.S. Patent Publication No. 2003/0179830 (“Eidson”)	U.S.	September 25, 2003

E-19	U.S. Patent Publication No. 2005/0242876 to Obernosterer ("Obernosterer")	U.S.	November 3, 2005
E-20	U.S. Patent No. 7,035,345 to Jeckeln ("Jeckeln '345")	U.S.	April 25, 2006
E-21	"Open-Loop Digital Predistorter for RFPower Amplifiers Using Dynamic DeviationReduction-Based Volterra Seriesto" to Zhu et al.("Zhu")	U.S.	July, 2008
E-22	"Design of Digital Predistorters for Multi-Band Signals" to Choi et al.("Choi")	U.S.	December, 2010
E-23	U.S. Patent No. 8,767,857 to Bassam et al. ("Bassam '857")	U.S.	December 16, 2010
E-24	EP2146474 to Xin ("Xin")	EP	January 20, 2010
E-25	EP2040375 to Jelonnek ("Jelonnek '375)	EP	March 25, 2009
E-26	U.S. Patent No. 8,576,943 to Kilambi et al. ("Kilambi")	U.S.	March 14, 2013
E-27	U.S. Patent No. 6,999,523 to Posti ("Posti")	U.S.	February 21, 2002

6. Prior Art Systems

Defendants also contend that the Asserted Claims are invalid in view of public knowledge, uses and/or offers for sale or sales of products and services that are prior art under 35 U.S.C. § 102(a) and/or 35 U.S.C. § 102(b) and/or prior inventions made in this country by other inventors who had not abandoned, suppressed, or concealed them under 35 U.S.C. § 102(g), and that anticipate or render obvious the Asserted Claims.

Based upon Defendants on-going and preliminary investigation to date, Defendants have listed below each system that is presently known by Defendants to constitute prior art under 35 U.S.C. §§ 102(a), (b) and/or (g). Defendants contend that the following descriptions and events are stated on information and belief, and are supported by the information and documents that will be produced by Defendants and/or third parties.

As discovery is ongoing and in its early stages, Defendants continue to investigate these events, and Defendants reserve the right to rely upon any system, public knowledge or use embodying or otherwise incorporating any of the prior art disclosed herein, alone or in combination. Defendants further reserve the right to supplement their disclosure of system art in

view of Plaintiff's future, supplemental infringement contentions, including any additional theories of infringement or claim interpretation contained therein. Defendants further reserve the right to rely upon any other documents or references describing any such system, knowledge or use.

Based upon Defendants' investigation to date, the following systems, and any other systems identified in these contentions, are prior art under one or more of 35 U.S.C. § 102(a), (b), and (g).

Item Offered for Sale and/or Publicly Used or Known	Date of Offer / Public Use / Knowledge[8]	Person or Entity Who Made and Received Offer, Made Public Use, or Made Information Known or to Whom Made Known
Nokia Products embodying the disclosure from, *e.g.*, U.S. Patent No. 7,415,252 to Jelonnek et al.	As early as 2004	Nokia
Nokia Products embodying the disclosure from, *e.g.*, EP2040375 to Jelonnek.	As early as 2007	Nokia
Nokia Products using Mera or Gaia Digital Front End Radio Chips	As early as 2004	Nokia
Altera Corporation Digital Predistortion Linear Transmitter	As early as 2003	Altera Corporation and/or Intel CPU Corporation
Ericsson's HC DPD,[9] and any similar systems	As early as December 6, 2005	Ericsson
Ericsson's RU22-2140 FPGA,[10] and any similar systems	As early as March 28, 2006	Ericsson

[8] The dates in this column are the latest dates on which the systems were publicly used or known. Defendants reserve the right to identify earlier dates should such dates be ascertained through discovery.

[9] The HC DPD and its DPD module are described at ERIC-SRF-00030069. Smart RF's February 27, 2025 Supplemental Infringement Contentions allege that the HC DPD meets several limitations of the Asserted Claims.

[10] The RU22-2140 FPGA and its DPD module are described at ERIC-SRF-00029524. Smart RF's February 27, 2025 Supplemental Infringement Contentions allege that the RU22-2140 FPGA

Item Offered for Sale and/or Publicly Used or Known	Date of Offer / Public Use / Knowledge[8]	Person or Entity Who Made and Received Offer, Made Public Use, or Made Information Known or to Whom Made Known
Ericsson's RUW01 DPD FPGA,[11] and any similar systems	As early as June 14, 2010	Ericsson

7. Prior Invention

Defendants also contend that the Asserted Claims are invalid under pre-AIA Section 102(f) because the named inventors did not actually invent the subject matter sought to be patented. In particular, and to the extent that Smart RF asserts that Nokia Radios using Mera or Gaia Digital Front Ends infringe any Asserted Claim, then the subject matter of Smart RF's infringement assertions was not invented by Smart RF, but by Nokia (*see, e.g.,* U.S. Patent No. 7,415,252 to Jelonnek et al. and EP2040375 to Jelonnek). Similarly, to the extent that Smart RF asserts that Ericsson HC DPD, RU22-2140 FPGA, or RUW01 DPD FPGA infringes any Asserted Claim, then the subject matter of Smart RF's infringement assertions was not invented by Smart RF, but by Ericsson's personnel.

B. Obviousness

As the Supreme Court has established, "[t]he combination of familiar elements according to known methods is likely to be obvious when it does no more than yield predictable results." *KSR Int'l Co. v. Teleflex, Inc.*, 550 U.S. 398, 416 (2007).

> When a work is available in one field of endeavor, design incentives and other market forces can prompt variations of it, either in the same field or a different one. If one of ordinary skill can implement a predictable variation, § 103 likely bars its patentability. For the same reason, if a technique has been used to improve one

---

meets several limitations of the Asserted Claims.

[11] The RUW01 DPD FPGA and its DPD module are described at ERIC-SRF-00023351. Smart RF's February 27, 2025 Supplemental Infringement Contentions allege that the RUW01 DPD FPGA meets several limitations of the Asserted Claims.

> device, and one of ordinary skill in the art would recognize that it would improve similar devices in the same way, using the technique is obvious unless its actual application is beyond his or her skill.

Id. at 417. "[I]n many cases a person of ordinary skill will be able to fit the teachings of multiple patents together like pieces of a puzzle." *Id.* at 420. Indeed, it is sufficient that a combination of elements was "obvious to try":

> When there is a design need or market pressure to solve a problem and there are a finite number of identified, predictable solutions, a person of ordinary skill has good reason to pursue the known options within his or her technical grasp. If this leads to the anticipated success, it is likely the product not of innovation but of ordinary skill and common sense.

Id. at 421. "In that instance the fact that a combination was obvious to try might show that it was obvious under § 103." *Id*. The Supreme Court has admonished against the application of "[r]igid preventative rules that deny factfinders recourse to common sense . . . ." *Id*. This is because "[g]ranting patent protection to advances that would occur in the ordinary course without real innovation retards progress and may, in the case of patents combining previously known elements, deprive prior inventions of their value or utility." *Id*. at 419.

For each Asserted Patent, all prior art items relied upon herein are directed to the same fields of endeavor. Accordingly, one of ordinary skill in the art would have recognized that the results of the combinations were predictable, and would have been motivated to modify and/or combine the prior art items for each Asserted Patent to arrive at the claimed inventions. At least the following rationales support a finding of obviousness based on such combinations of prior art:

- combining prior art elements according to known methods to yield predictable results;
- simple substitution of one known element for another to obtain predictable results;
- use of a known techniques to improve similar devices (or methods) in the same way;
- applying a known technique to a known device (or method) ready for improvement

to yield predictable results;

- choosing from a finite number of identified, predictable solutions, with a reasonable expectation of success ("obvious to try");
- prompting of variations of known work in one field of endeavor for use in either the same field or a different one based on design incentives or other market forces if the variations would have been predictable to one skilled in the art; and
- some teaching, suggestion, or motivation in the prior art that would have led one skilled in the art to modify the prior art or to combine prior art teachings to arrive at the claimed invention.

Thus, to the extent that the Asserted Claims are deemed not to be anticipated, Defendants contend that the Asserted Claims are invalid as obvious under 35 U.S.C. § 103 in view of at least the prior art listed herein and set forth in the attached Exhibits. Defendants' contentions that the Asserted Claims are obvious under 35 U.S.C. § 103 are in no way an admission or suggestion that any prior art relied upon herein is not anticipatory under 35 U.S.C. § 102.

Defendants set forth certain specific combinations of prior art below in addition to combinations identified in its claim charts, based on Defendants' present understanding of the Asserted Claims and the apparent claim constructions adopted by Plaintiff. As discussed above, Defendants contend that each prior art item identified above is anticipatory under 35 U.S.C. § 102 alone and/or renders the claimed invention obvious under 35 U.S.C. § 103. Defendants also reserve the right to rely on the discussions of the state of the art and prior art in each of the Asserted Patent specifications and their file histories including foreign file histories of related patents in explaining the state of the art.

1. The '345 Patent

The primary references identified above, as further described in the Exhibits, each disclose, either expressly or inherently, every element of the Asserted Claims, thereby anticipating those claims. Additionally, each of the primary references alone (including in combination with the

knowledge of a person of ordinary skill in the art) renders obvious the Asserted Claims. To the extent Plaintiff contends that any primary reference does not anticipate or render obvious the Asserted Claims as set forth above, it would have been obvious to combine or modify the primary references with concepts from other prior art, as explained throughout these Invalidity Contentions. In particular, for each limitation of the Asserted Claims that Plaintiff contends is not met by a particular primary reference, Defendants contend that the limitation (and claim as a whole) is obvious based on a combination of that particular primary reference with (1) any other primary reference disclosing that limitation, (2) any reference identified and/or relied on in the primary references as disclosing that limitation, (3) any statements made in the intrinsic record of the Asserted Patent, and/or (4) the knowledge of one of ordinary skill in the art (as explained in additional detail below).

It would have been obvious to try combining the prior art references identified above because there were only a finite number of predictable solutions and/or because known work in one field or endeavor prompted variations based on predictable design incentives and/or market forces either in the same field or a different one. Each of the references identified in these Invalidity Contentions are directed to the same field of endeavor (*e.g.*, the predistortion and methods of predistortion using digital receivers). *See* '345 Patent, 1:6–9. The solutions identified in the prior art utilize the same components and techniques that are identified in the '345 Patent. Thus, as set forth in the aforementioned claim charts, a person of ordinary skill in the art would be motivated to look for solutions in other references in that field or that solve the same alleged problems.

Relatedly, one of ordinary skill in the art would have been motivated to create combinations identified in these contentions using: known methods to yield predictable results; known

techniques in the same way; a simple substitution of one known, equivalent element for another to obtain predictable results; and/or teaching, suggestion, or motivation in the prior art generally. Also, market forces in the industry, and the desire to improve features and performance, would motivate the addition of features to systems as they become available, become smaller, become less expensive, become more commonly used, provide better performance, reduce costs, or predictably achieve other clearly desirable results.

The following includes examples of combinations that one of ordinary skill in the art would have found obvious, in particular with respect to Asserted Claims 1–11 of the ’345 Patent:

- Leyendecker, alone or in combination with Belcher, Jin, Johnson, Jeckeln, Proctor, Antonio Ghaderi, and/or Jeckeln 364 render obvious the Asserted Claims of the ’345 Patent.
- Belcher, alone or in combination with Leyendecker, Jin, Johnson, Jeckeln, Proctor, Antonio Ghaderi, and/or Jeckeln 364 render obvious the Asserted Claims of the ’345 Patent.
- Jin, alone or in combination with Leyendecker, Belcher, Johnson, Jeckeln, Proctor, Antonio Ghaderi, and/or Jeckeln 364 render obvious the Asserted Claims of the ’345 Patent.
- Jeckeln, alone or in combination with Leyendecker, Belcher, Jin, Johnson, Proctor, Antonio Ghaderi, and/or Jeckeln 364 render obvious the Asserted Claims of the ’345 Patent.
- Proctor, alone or in combination with Leyendecker, Belcher, Jin, Johnson, Jeckeln, Antonio Ghaderi, and/or Jeckeln 364 render obvious the Asserted Claims of the ’345 Patent.

- Antonio, alone or in combination with Leyendecker, Belcher, Jin, Johnson, Jeckeln, Proctor, Ghaderi, and/or Jeckeln 364 render obvious the Asserted Claims of the ’345 Patent.
- Ghaderi, alone or in combination with Leyendecker, Belcher, Jin, Johnson, Jeckeln, Proctor, Antonio, and/or Jeckeln 364 render obvious the Asserted Claims of the ’345 Patent.
- Jeckeln 364, alone or in combination with Leyendecker, Belcher, Jin, Johnson, Jeckeln, Proctor, Antonio, and/or Ghaderi render obvious the Asserted Claims of the ’345 Patent.

All of the items of prior art above are directed to methods for digital predistortion methods to compensate for nonlinear behavior of a power amplifier, in accordance with the purported invention of the ’345 Patent. Combining the known features set forth by these items of prior art would constitute predictable variations contemplated by the ordinary skill in the art at the time of the alleged invention and would be likely to succeed. Combining the features of any of these items of prior art would constitute the mere combination of known elements according to known methods to yield predictable results. Specific to each such item of prior art, Defendants summarize below the reasons why one of ordinary skill in the art would have been motivated to combine such prior art with the other references in Table A.

a. Motivation for combining with Leyendecker

One of ordinary skill in the art would have been motivated to combine Leyendecker with any of the other references in Table A. Leyendecker discloses new techniques for transmitting an amplified RF signal using digital predistortion. Leyendecker at 2:65–3:5. For example, Leyendecker discloses that the system includes a “predistorter 407 [that] receives digital input

samples and modifies them with, ideally, the inverse of the transfer characteristics of the power amplifier 103." *Id.* at 9:5-7. In addition, the inventors explain that "the memory effect compensator 501 of the predistorter 407 takes into account the power or magnitude envelope of one or more previous samples" in order to more accurately model the predistortion function. *Id*. at 9:10–34. This is accomplished, in part, through the use of a feedback loop and a "trainer [that] provides one or more 'trainer' signals to the predistorter to update the predistorter's response to the in-phase and quadrature signals input to the predistorter as the power amplifier's response changes due to temperature, age, etc." *Id*. at 6:42–58. Leyendecker additionally explains that "embodiments of the predistortion system described above are illustrative," and that "various changes can be made . . . without departing from the spirit and scope of the invention." *Id*. at 21:15–23.

One of ordinary skill in the art would recognize, in view of Leyendecker's teachings concerning digital predistortion, that instantaneous characterization of a power amplifier may be performed digitally through the use of amplitude and phase look-up tables ("LUTs") which implement a complex predistortion function to compensate for nonlinearities and memory effects. One of ordinary skill in the art would have recognized that a combination with Leyendecker combines prior art elements according to known methods to yield predictable results. Leyendecker and the other references use known techniques to improve similar devices or methods in the same way. Moreover, a combination with Leyendecker was obvious to try because one of skill in the art would have chosen from a finite number of identified, predictable solutions, with a reasonable expectation of success.

b. Motivation for combining with Belcher

One of ordinary skill in the art would have been motivated to combine Belcher with any of the other references in Table A. Belcher discloses an adaptive amplifier distortion mechanism that

"reduce[s] amplitude and phase distortion of a microwave and RF power amplifier, by injecting a predistortion signal derived from respectively different work function signals . . . that are derived from the input envelope of the input signal to the RF amplifier." Belcher at 1:8–16. Belcher explains that the disclosed predistortion system "resides primarily in what is effectively a prescribed arrangement of conventional RF amplifier circuitry components," the details of which would be "readily apparent to those skilled in the art having the benefit of [Belcher's disclosures]." *Id*. at 2:44–65.

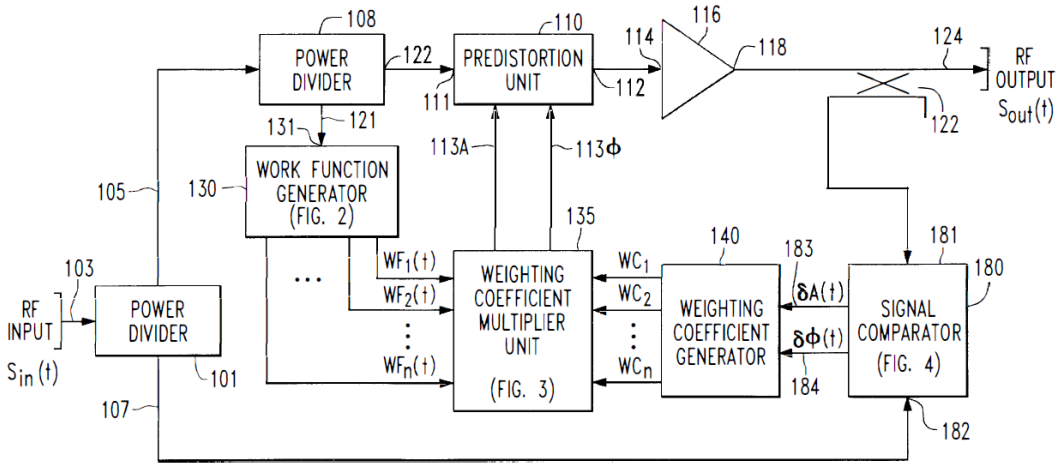

FIG. 1

Id. at Fig. 1. Belcher further explains that "the adaptive input signal predistortion mechanism of the present invention, by monitoring both the envelope-dependency of the distortion-introducing behavior of the amplifier and the amplifier output, is able . . . to minimize the error in the amplifier output and thereby effectively compensate for the inherent distortion behavior of the amplifier. *Id*. at 7:5–15.

One of ordinary skill in the art would recognize, in view of Belcher's teachings concerning digital predistortion and the envelope dependency of the distortion-introducing behavior of an RF power amplifier, that the instantaneous characterization of signals derived from the input envelope of the input signal to the RF amplifier may be used to compensate for nonlinearities and memory

effects of the RF amplifier. One of ordinary skill in the art would have recognized that a combination with Belcher combines prior art elements according to known methods to yield predictable results. Belcher and the other references use known techniques to improve similar devices or methods in the same way. Moreover, a combination with Belcher was obvious to try because one of skill in the art would have chosen from a finite number of identified, predictable solutions, with a reasonable expectation of success.

c. Motivation for combining with Jin

One of ordinary skill in the art would have been motivated to combine Jin with any of the other references in Table A. Jin disclose a need, then existing, "for improved RF power amplifiers that can operate more closely to full power in systems having high peak-to-mean digital signal ratios." *Id.* at 2:17–21. "More particularly, there is a need for RF power controllers that make RF power amplifiers more efficient by utilizing the available ACP [adjacent channel power] noise margins under the applicable standard ACP profile." *Id*. at 2:21–25. Jin, thus, discloses "a pre-distortion adjustment circuit for use in an RF transmitter that optimizes the ACP profile of an RF power amplifier to fully use the ACP profile under the applicable RF communication standard." *Id*. at 2:27–33. Jin further explains that "[t]hose skilled in the art should appreciate that they may readily use the conception and the specific embodiment disclosed as a basis for modifying or designing other structures for carrying out the same purposes of the invention" (*id*. at 3:29–34), and that "[t]he present invention may be implemented in any type of digital modulation scheme, including TDMA, CDMA, GSM, NCDMA, multi-carrier signals, and even modems." *Id*. at 6:10–17.

One of ordinary skill in the art would recognize, in view of Jin's teachings concerning digital predistortion and ACP profile data, that RF amplifier efficiency in conventional RF transmitter may be optimized using Jin's disclosed techniques. One of ordinary skill in the art

would have recognized that a combination with Jin combines prior art elements according to known methods to yield predictable results. Jin and the other references use known techniques to improve similar devices or methods in the same way. Moreover, a combination with Jin was obvious to try because one of skill in the art would have chosen from a finite number of identified, predictable solutions, with a reasonable expectation of success.

d. Motivation for combining with Johnson

One of ordinary skill in the art would have been motivated to combine Johnson with any of the other references in Table A. Johnson discloses "a new method and apparatus for reducing adjacent channel power in wireless communication systems." Johnson at 1:55–59. "[T]he system 10 includes a digital predistorter, or predistorting module, 12 for receiving the input signal, an IQ modulator 14 connected to the output of the module 12, and amplifier 16 connected to the output of the modulator 14, and a receiver 18 that is coupled to the output of the amplifier through a coupler 17 and fed back to the module." *Id*. at 2:37–43. Johnson explains that the system advantageously "provides an efficient and reliable alternative method to reduce adjacent channel power by adaptively and digitally pre-distorting the signal to compensate for the non-linearity of the amplifier." *Id*. at 1:55–59. Johnson further explains that the disclosed techniques can be configured "to apply a correction to a digital baseband signal (e.g. a code division multiple access (CDMA) signal, a wide band CDMA signal, a time division multiple access (TDMA) signal, an enhanced data rates through global system for mobile communications evolution (EDGE) signal, or any signal with a substantially large peak power to average power ration) generated by a communication device—such as a base station used for transmitting wireless communication data—and applied to the pre-distorting module 12 as an input signal." *Id*. at 4:37–54.

One of ordinary skill in the art would recognize, in view of Johnson's teachings concerning digital predistortion and ACP requirements for modern communications systems, that digital

predistortion techniques for linearization of RF power amplifiers may be improved by applying the ACP noise reduction techniques described in Johnson. One of ordinary skill in the art would have recognized that a combination with Johnson combines prior art elements according to known methods to yield predictable results. Johnson and the other references use known techniques to improve similar devices or methods in the same way. Moreover, a combination with Johnson was obvious to try because one of skill in the art would have chosen from a finite number of identified, predictable solutions, with a reasonable expectation of success.

e. Motivation for combining with Jeckeln

One of ordinary skill in the art would have been motivated to combine Jeckeln with any of the other references in Table A. Jeckeln discloses "a new digital predistorter for microwave emitters with real time modeling of both, PA [power amplifier] and QM [quadrature modulator] distortions, that can compensate for nonlinearity, gain imbalance, and phase imbalance and DC offset." Jeckeln, at 336. Jeckeln further explains that "in the RTM [real time modeling] algorithm, the input digital baseband signal and the output lowpass equivalent complex envelopes of the amplifier are sampled, scaled and updated into the lookup tables to provide the predistorted signal." *Id*. at 337. "[C]orrelation between the predistorted signal and the feedback signals is performed, and the delay is compensated by the same amount in the predistorted signal." *Id*.

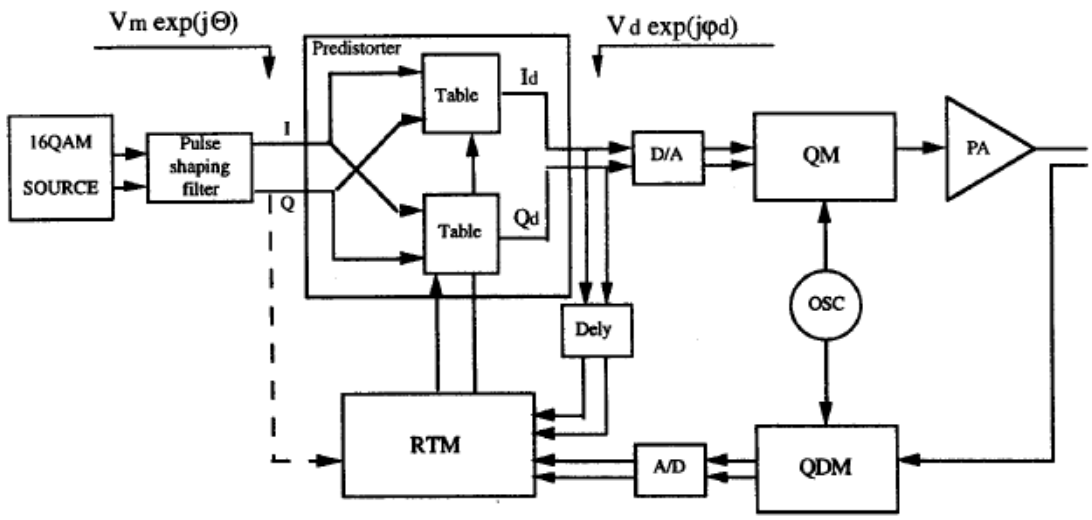

Fig. 1 Block diagram

Id. at Fig. 1. Jeckeln further explains that this real time modeling technique was developed to be implemented on commercially available digital signal multiprocessors using a two dimensional lookup table technique. *Id*. at 337.

One of ordinary skill in the art would recognize, in view of Jeckeln's teachings concerning digital predistortion and real time modeling of predistortion functions, that instantaneous characterization of a power amplifier may be performed digitally through the use of amplitude and phase LUTs to compensate for nonlinearities and memory effects. One of ordinary skill in the art would have recognized that a combination with Jeckeln combines prior art elements according to known methods to yield predictable results. Jeckeln and the other references use known techniques to improve similar devices or methods in the same way. Moreover, a combination with Jeckeln was obvious to try because one of skill in the art would have chosen from a finite number of identified, predictable solutions, with a reasonable expectation of success.

f. Motivation for combining with Proctor

One of ordinary skill in the art would have been motivated to combine Proctor with any of the other references in Table A. Proctor discloses "[a] digitally implemented, look-up table-based,

predistortion and feed-forward correction signal processing mechanism [that] compensates for distortion generated in the RF power amplifier." Proctor at Abstract. Proctor explains that "[c]arrying out such signal processing in the digital domain allows a very precise representation of the amplifier's non-linear transfer function to [be] modelled and iteratively adjusted, as necessary, so as to completely compensate for both AM to AM and AM to PM distortion generated in the RF power amplifier." *Id*. at 2:29–37. Proctor discloses that in the disclosed system, the input and output signals to the RF amplifier are compared, and that said signals can be downconverted and digitized to baseband, or, alternatively, digital baseband data can be used as the input signal. *Id*. at 2:38–45.

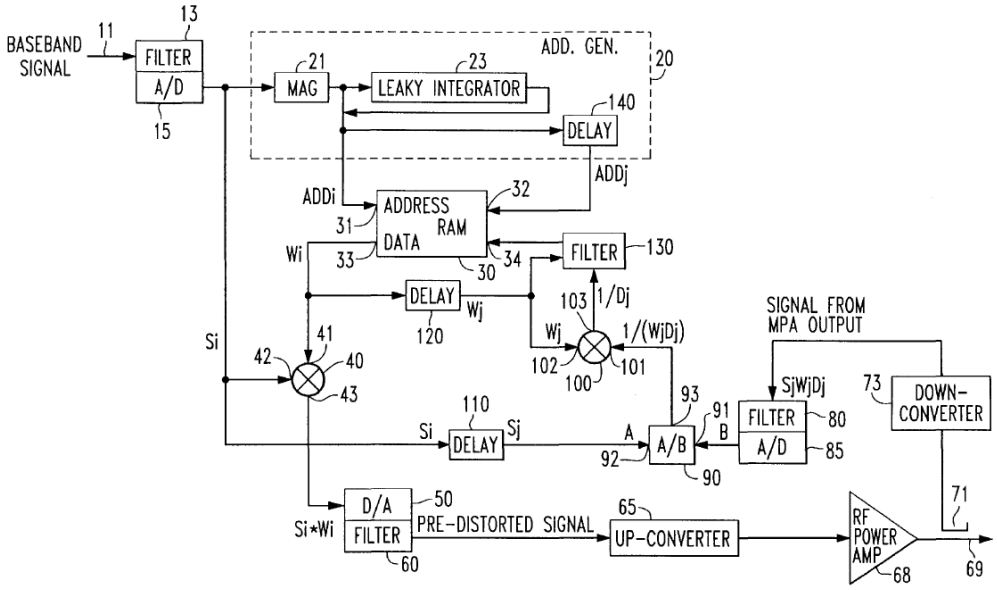

FIG. 1

Id. at Fig. 1. Proctor further explains that "the present invention takes advantage of the speed and memory capacity of digital signal processors to perform predistortion and feed-forward correction signal processing in the digital domain," (*id*. at 9:30–38), and "is susceptible to numerous changes and modifications as known to a person skilled in the art." *Id*. at 9:39–47.

One of ordinary skill in the art would recognize, in view of Proctor's teachings concerning digital predistortion and real time modeling of predistortion functions, that instantaneous characterization of a power amplifier may be advantageously performed digitally through the use of amplitude and phase LUTs to compensate for nonlinearities and memory effects. One of ordinary skill in the art would have recognized that a combination with Proctor combines prior art elements according to known methods to yield predictable results. Proctor and the other references use known techniques to improve similar devices or methods in the same way. Moreover, a combination with Proctor was obvious to try because one of skill in the art would have chosen from a finite number of identified, predictable solutions, with a reasonable expectation of success.

g. Motivation for combining with Antonio

One of ordinary skill in the art would have been motivated to combine Antonio with any of the other references in Table A. Antonio discloses a system and method for performing digital predistortion by iteratively adjusting predistortion parameters based upon the measured output signal of an RF power amplifier. Antonio at 2:64–3:15. Antonio explains that "[m]ost of the nonlinearities are introduced in the HPA and can be characterized by amplitude and phase modulation as a function of the instantaneous input-signal envelope." *Id*. at 7:12–15. "Nevertheless, the lookup table can be generated by any function of the signal envelope that satisfies . . . the [specified] requirements." *Id*. at 7:41–8:4. Antonio discloses that the baseband to RF conversion circuit "may advantageously be implemented as part of a modulation ASIC in a BTS [base station transceiver subsystems]," or alternatively, "with discrete hardware components available off-the-shelf." *Id*. at 4:56–65. Antonio explains further that "[i]mplementation of the D/A, A/D, upconversion, and downconversion functions on an ASIC, or on a DSP chip, is known in the art."

One of ordinary skill in the art would recognize, in view of Antonio's teachings concerning

measuring the output power level of the out-of-band distortion from an RF amplifier and adjusting the predistortion function based on said measured output signal, could be used to better account for nonlinearities and memory effects in an RF transmitter. One of ordinary skill in the art would have recognized that a combination with Antonio combines prior art elements according to known methods to yield predictable results. Antonio and the other references use known techniques to improve similar devices or methods in the same way. Moreover, a combination with Antonio was obvious to try because one of skill in the art would have chosen from a finite number of identified, predictable solutions, with a reasonable expectation of success.

h. Motivation for combining with Ghaderi

One of ordinary skill in the art would have been motivated to combine Ghaderi with any of the other references in Table A. Ghaderi discloses an adaptive predistortion linearization technique that minimizes the nonlinear characteristics of a power amplifier. Ghaderi at 1125. Ghaderi explains that a modulated QAM signal input and output of an RF amplifier is sampled and used to estimate and predistort the signal. *Id*. at 1126. Ghaderi further explains that the complex envelope of the modulated QAM signal is indexed and used to model the predistortion function. *Id*.

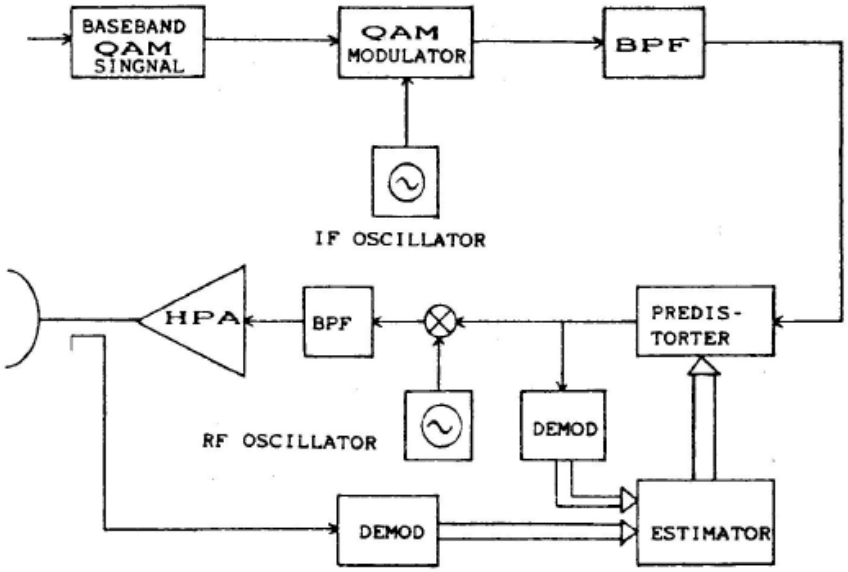

Figure 1: Block schematic of a QAM system transmit chain with adaptive predistorter

Id. at Fig. 1. Ghaderi explains that the proposed solution "could be implemented at the baseband, IF or RF frequencies." *Id*. at 1125.

One of ordinary skill in the art would recognize, in view of Ghaderi's teachings concerning digital predistortion and techniques for improving a predistortion function, could be used to better account for nonlinearities and memory effects in an RF transmitter. One of ordinary skill in the art would have recognized that a combination with Ghaderi combines prior art elements according to known methods to yield predictable results. Ghaderi and the other references use known techniques to improve similar devices or methods in the same way. Moreover, a combination with Ghaderi was obvious to try because one of skill in the art would have chosen from a finite number of identified, predictable solutions, with a reasonable expectation of success.

i. Motivation for combining with Jeckeln 364

One of ordinary skill in the art would have been motivated to combine Jeckeln 364 with any of the other references in Table A. Jeckeln 364 discloses an adaptive predistortion method and device for power amplifiers, such as those designed for use in spectrally efficient microwave

mobile communications equipment. Jeckeln 364, 1:8-12. Jeckeln 364 explains that its method comprises the steps of "predistorting the signal to be transmitted by means of predistortion amplitude and phase look-up table means interposed between the signal source and the input of the power amplifier, producing a first feedback signal in response to the predistorted signal, producing a second feedback signal in response to the amplified output signal from the power amplifier, delaying at least one of the first and second feedback signals . . . and updating the predistortion amplitude and phase look-up table means in response to the first and second feedback signals." *Id*. at 3:3-14.

FIG.1

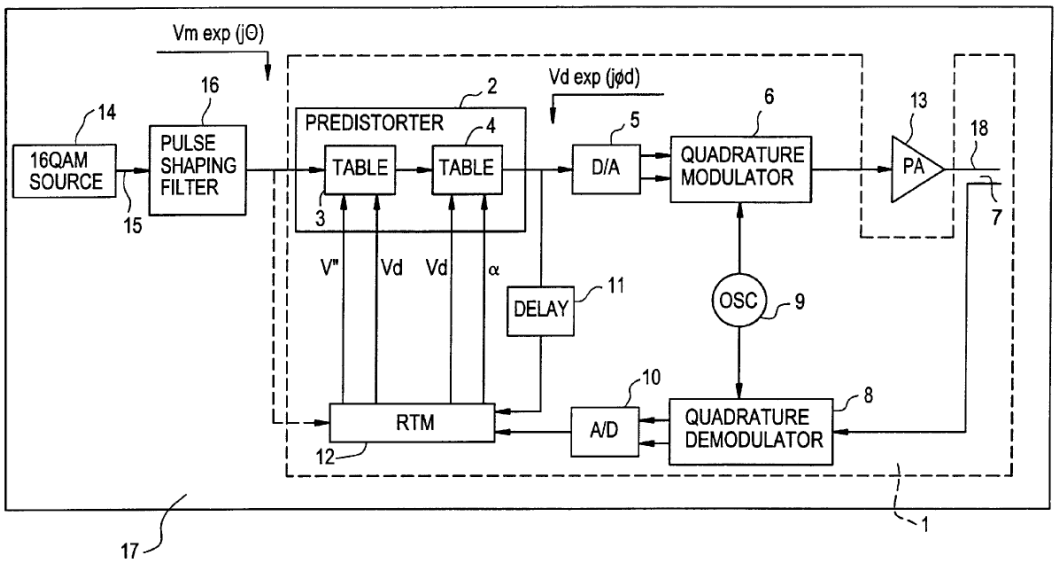

Id. at Fig. 1. As shown above, Jeckeln teaches using a 16-QAM modulated source signal, but explains that other sources may be used as well. *Id*. at 5:6-10.

One of ordinary skill in the art would recognize, in view of Jeckeln 364's teachings concerning digital predistortion and techniques for improving a predistortion function, that Jeckeln 364 could be used to better account for nonlinearities and memory effects in an RF transmitter. One of ordinary skill in the art would have recognized that Jeckeln 364 could be easily and simply

combined with prior art elements according to known methods to yield predictable results. Jeckeln 364 and the other references use known techniques to improve similar devices or methods in the same way. Moreover, a combination with Jeckeln 364 was obvious to try because one of skill in the art would have chosen from a finite number of identified, predictable solutions, with a reasonable expectation of success.

2. The '561 Patent

The primary references identified above, as further described in the Exhibits, each disclose, either expressly or inherently, every element of the Asserted Claims, thereby anticipating those claims. Additionally, each of the primary references alone (including in combination with the knowledge of a person of ordinary skill in the art) renders obvious the Asserted Claims. To the extent Plaintiff contends that any primary reference does not anticipate or render obvious the Asserted Claims as set forth above, it would have been obvious to combine or modify the primary references with concepts from other prior art, as explained throughout these Invalidity Contentions. In particular, for each limitation of the Asserted Claims that Plaintiff contends is not met by a particular primary reference, Defendants contend that the limitation (and claim as a whole) is obvious based on a combination of that particular primary reference with (1) any other primary reference disclosing that limitation, (2) any reference identified and/or relied on in the primary references as disclosing that limitation, (3) any statements made in the intrinsic record of the Asserted Patent, and/or (4) the knowledge of one of ordinary skill in the art (as explained in additional detail below).

It would have been obvious to try combining the prior art references identified above because there were only a finite number of predictable solutions and/or because known work in one field or endeavor prompted variations based on predictable design incentives and/or market forces either in the same field or a different one. Each of the references identified in these

Invalidity Contentions are directed to the same field of endeavor (*e.g.*, the field of modeling of wireless nonlinear radio systems and the methods of use thereof in digital baseband predistortion). *See* '561 Patent, 1:14–17. The solutions identified in the prior art utilize the same components and techniques that are identified in the '561 Patent. Thus, as set forth in the aforementioned claim charts, a person of ordinary skill in the art would be motivated to look for solutions in other references in that field or that solve the same alleged problems.

Relatedly, one of ordinary skill in the art would have been motivated to create combinations identified in these contentions using: known methods to yield predictable results; known techniques in the same way; a simple substitution of one known, equivalent element for another to obtain predictable results; and/or teaching, suggestion, or motivation in the prior art generally. Also, market forces in the industry, and the desire to improve features and performance, would motivate the addition of features to systems as they become available, become smaller, become less expensive, become more commonly used, provide better performance, reduce costs, or predictably achieve other clearly desirable results.

The following includes examples of combinations that one of ordinary skill in the art would have found obvious, in particular with respect to Asserted Claims 1–22 of the '561 Patent:

- Liu, alone or in combination with Song, Cova, Ding, Griph, Hammi, and/or Jelonnek, render obvious the Asserted Claims of the '561 Patent.
- Song, alone or in combination with Liu, Cova, Ding, Griph, Hammi, and/or Jelonnek render obvious the Asserted Claims of the '561 Patent.
- Cova, alone or in combination with Liu, Song, Ding, Griph, Hammi, and/or Jelonnek, render obvious the Asserted Claims of the '561 Patent.
- Ding, alone or in combination with Liu, Song, Cova, Griph, Hammi and/or

Jelonnek, render obvious the Asserted Claims of the ’561 Patent.

- Griph, alone or in combination with Liu, Song, Cova, Ding, Hammi, and/or Jelonnek, render obvious the Asserted Claims of the ’561 Patent.
- Hammi alone or in combination with Liu, Song, Cova, Ding, Griph, and/or Jelonnek, render obvious the Asserted Claims of the ’561 Patent.
- Jelonnek alone or in combination with Liu, Song, Cova, Ding, Griph, and/or Hammi render obvious the Asserted Claims of the ’561 Patent.

All of the items of prior art above are directed to methods for pre-distorting RF modulated signals to compensate for the behavior of a power amplifier, in accordance with the purported invention of the ’561 Patent. Combining the known features set forth by these items of prior art would constitute predictable variations contemplated by the ordinary skill in the art at the time of the alleged invention and would be likely to succeed. Combining the features of any of these items of prior art would constitute the mere combination of known elements according to known methods to yield predictable results. Specific to each such item of prior art, Defendants summarize below the reasons why one of ordinary skill in the art would have been motivated to combine such prior art with the other references in Table B.

a. Motivation for combining with Liu

One of ordinary skill in the art would have been motivated to combine Liu with any of the other references in Table B. Liu discloses new techniques for accurately modeling memory effects in wide-band RF transmitters. *See* Liu at 3579, 3584. For example, Liu discloses, “a new comprehensive memory-effect model . . . [that] is able to account for linear distortion (frequency response near the carrier) and weak nonlinear distortion due to baseband frequency response, harmonic loading conditions, and trap effects that might occur in semiconductor devices.” *Id.* at

3579. This is accomplished through "a new parallel branch [that] is added to the linear FIR filter;" thus, "the linear FIR filter in the conventional Weiner model, . . . is replaced by a weak nonlinear dynamic FIR-based filter." *Id*. at 3584–85.

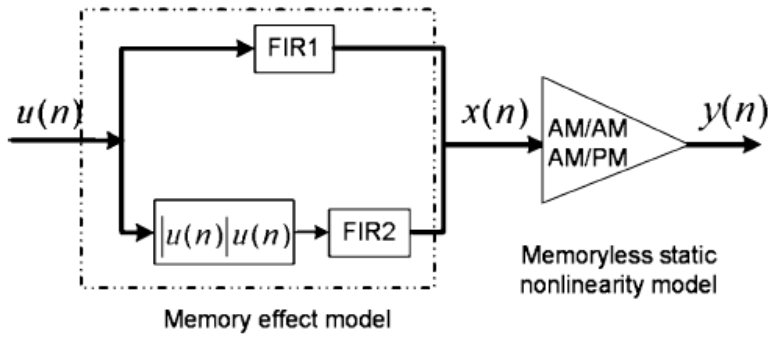

Fig. 17. Augmented Wiener transmitter model diagram.

Id. at Fig. 17. Further, Liu explains, "[t]his technique is so inherently robust that it can be used for any type of RF transmitters exhibiting any complex gain shape variations." *Id*. at 3586.

One of ordinary skill in the art would recognize, in view of Liu's teachings concerning digital predistortion, that distortion wide-band RF power amplifiers exhibiting memory effects could be effectively precompensated by cascading a dynamic weak nonlinear model with a strong nonlinear model. One of ordinary skill in the art would have recognized that a combination with Liu combines prior art elements according to known methods to yield predictable results. Liu and the other references use known techniques to improve similar devices or methods in the same way. Moreover, a combination with Liu was obvious to try because one of skill in the art would have chosen from a finite number of identified, predictable solutions, with a reasonable expectation of success.

b. Motivation for combining with Song

One of ordinary skill in the art would have been motivated to combine Song with any of the other references in Table B. For example, Song discloses "an apparatus and method for

eliminating the spurious signal of a non-linear amplifier in a base station transmitter of a mobile communication system." Song, at Abstract. Song explains that the proposed digital predistorter system has "a memoryless nonlinearity part using a look-up table and a memory nonlinearity part using an FIR filter, and adaptively updates the look-up table and the filtering coefficients of the FIR filter." *Id*.

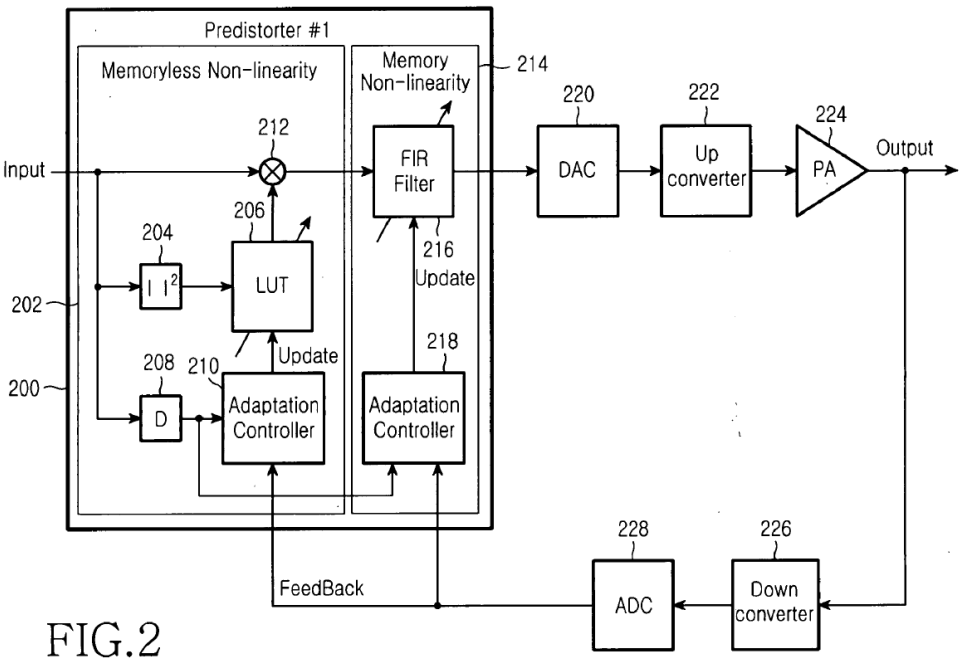

FIG.2

Id. at Fig. 2. Song further explains that the described embodiments of the present invention "pertain[] to elimination of distortion generated in amplifying a transmission signal, particularly to adaptive updating of a memoryless non-linearity part and a memory non-linearity part in a digital predistorter for a power amplifier in a wideband mobile communication system." *Id*. at 2, [0030]. Song discloses that "[w]hile the invention has been shown and described with reference to certain embodiments thereof, it will be understood by those skilled in the art that various changes in the form and details may be made therein without departing from the spirit and scope of the invention." *Id*. at 6, [0082].

One of ordinary skill in the art would recognize, in view of Song's teachings concerning

digital predistortion, that wide-band RF power amplifiers exhibiting memory effects could be effectively predistorted by combining a memoryless non-linear system that uses lookup tables with a memory nonlinear system that finite impulse response ("FIR") and/or linear time invariant filters. One of ordinary skill in the art would have recognized that a combination with Song combines prior art elements according to known methods to yield predictable results. Song and the other references use known techniques to improve similar devices or methods in the same way. Moreover, a combination with Song was obvious to try because one of skill in the art would have chosen from a finite number of identified, predictable solutions, with a reasonable expectation of success.

c. Motivation for combining with Cova

One of ordinary skill in the art would have been motivated to combine Cova with any of the other references in Table B. For example, Cova discloses, "a new and improved digitally implemented predistorter control mechanism, which digitally executes a pair of signal processing operators, respectively associated with dynamic non-linearities and static nonlinear effects in [a] RF power amplifier's non-linear transfer characteristic." Cova at 1, [0009]. Cova further explains that "the dynamic predistorter control mechanism of the invention is readily suited for wide-band modulations." *Id*. at 2, [0015]. Cova explains that the invention may "be readily modified to compensate for changes in the modulation, temperature, amplifier aging, etc.," and that the disclosed "polynomial-based filter for compensating for dynamic memory effects reduces memory storage requirements and increases the accuracy of predistortion." *Id*. at 4, [0042].

One of ordinary skill in the art would recognize, in view of Cova's teachings concerning digital predistortion, that wide-band RF power amplifiers exhibiting memory effects could be effectively predistorted using a "cascaded pair of signal processing operators" (*id*. at 3, [0026]) that compensate for the amplifier's static non-linear transfer characteristic and the dynamic

memory effect characteristics. One of ordinary skill in the art would have recognized that a combination with Cova combines prior art elements according to known methods to yield predictable results. Cova and the other references use known techniques to improve similar devices or methods in the same way. Moreover, a combination with Cova was obvious to try because one of skill in the art would have chosen from a finite number of identified, predictable solutions, with a reasonable expectation of success.

d. Motivation for combining with Ding

One of ordinary skill in the art would have been motivated to combine Ding with any of the other references in Table B. For example, Ding explains that "[f]or wideband or high power applications, the power amplifier exhibits memory effects, for which memoryless predistorters can achieve only limited linearization performance." Ding. at xiii. Ding discloses various "digital predistortion systems for linearization of power amplifiers with memory effects" (*id.* at 3), including, *e.g.*, "the Wiener model, the Hammerstein model, the Wiener-Hammerstein model, the memory polynomial model, and the Murray Hill model." *Id*. at 11. Ding further explains these models may be combined to form a new model "which captures a wider class of nonlinear predistorter and can be implemented easily in hardware." *Id*. at 37.

One of ordinary skill in the art would recognize, in view of Ding's teachings concerning digital predistortion, that wide-band RF power amplifiers exhibiting memory effects could be effectively predistorted by combining a memory-based predistortion model and a memoryless predistortion model. One of ordinary skill in the art would have recognized that a combination with Ding combines prior art elements according to known methods to yield predictable results. Ding and the other references use known techniques to improve similar devices or methods in the same way. Moreover, a combination with Ding was obvious to try because one of skill in the art would have chosen from a finite number of identified, predictable solutions, with a reasonable

expectation of success.

e. Motivation for combining with Griph

One of ordinary skill in the art would have been motivated to combine Griph with any of the other references in Table B. For example, Griph discloses, "a system and method for predistorting a signal prior to input to an amplifier in order to cancel out memory components introduced prior to input to the amplifier." Griph at 1:4–8. Griph explains that when "data is digitally encoded on a waveform, the pulse shape of the waveform creates artifact portions, where the preceding pulses combine to interfere with the particular pulse being sampled." *Id*. 2:33–3:2. "By applying memory predistortion techniques, the [intersymbol interference] of the amplifier can be reduced, thus limiting the distortion." *Id*. at 3:11–13. Griph explains that "one skilled in the art will recognize that the communication system 10 provides a novel method for equalization of the post-HPA test point signal for use only in predistortion of transmitted signals." *Id*. at 9:6–8.

One of ordinary skill in the art would recognize, in view of Griph's teachings concerning digital predistortion, that wide-band RF power amplifiers exhibiting memory effects could be effectively compensated by decoupling the memoryless and memory-based distortion effects in the predistortion system. One of ordinary skill in the art would have recognized that a combination with Griph combines prior art elements according to known methods to yield predictable results. Griph and the other references use known techniques to improve similar devices or methods in the same way. Moreover, a combination with Griph was obvious to try because one of skill in the art would have chosen from a finite number of identified, predictable solutions, with a reasonable expectation of success.

f. Motivation for combining with Hammi

One of ordinary skill in the art would have been motivated to combine Hammi with any of the other references in Table B. Hammi discloses a digital predistortion system that is "composed

of a cascade of a static predistorter and a subband based linear filtering module." Hammi at Abstract, x. Hammi explains that the subband processing stage compensates for the mismatch between the predistorter and the amplifier characteristics to allow increased sensitivity of the predistorter to changes (such as temperature drift) in the amplifier's characteristics. *Id*. at xi–xii. Hammi further explains that the described system and method "is propitious for wideband signals such as those used in third generation (3G) systems," and offers various benefits including "the decrease of the required processing speed, the improvement of the predistorter's sensitivity and the enhancement of the convergence behaviour in the case of an adaptive scheme." *Id*. at x.

One of ordinary skill in the art would recognize, in view of Hammi's teachings concerning digital predistortion and compensation for memory effects, that predistortion of wide-band RF power amplifiers exhibiting memory effects could be improved through the use of enhanced and/or modified subband-based linear filtering. One of ordinary skill in the art would have recognized that a combination with Hammi combines prior art elements according to known methods to yield predictable results. Hammi and the other references use known techniques to improve similar devices or methods in the same way. Moreover, a combination with Hammi was obvious to try because one of skill in the art would have chosen from a finite number of identified, predictable solutions, with a reasonable expectation of success.

g. Motivation for combining with Jelonnek

One of ordinary skill in the art would have been motivated to combine Jelonnek with any of the other references in Table B. Jelonnek discloses a predistortion system and method with a multi-branch structure that compensates for memory effects of a transmitter power amplifier. Jelonnek at Abstract. For example, Jelonnek explains that "distortion units" may be used to "form an estimated output signal of the transmit power amplifier . . . to take into account memory effects of the transmit power amplifier." *Id*. at 11:28–33. Jelonnek further discloses a predistortion

comprising two "function blocks," including a "predistortion, no memory effects" block and a "distortion including memory effects" block, that together are used to provide a "common [predistorted] output signal." *Id*. at 13:31–64.

One of ordinary skill in the art would recognize, in view of Jelonnek's teachings concerning digital predistortion and compensation for memory effects, that, by implementing the described methods, "extinction of an error signal caused by non-linearities of the transmit power amplifier [may] be achieved." *Id*. at 2:64–67. One of ordinary skill in the art would have recognized that a combination with Jelonnek combines prior art elements according to known methods to yield predictable results. Jelonnek and the other references use known techniques to improve similar devices or methods in the same way. Moreover, a combination with Jelonnek was obvious to try because one of skill in the art would have chosen from a finite number of identified, predictable solutions, with a reasonable expectation of success.

3. The '857 Patent

The primary references identified above, as further described in the Exhibits, each disclose, either expressly or inherently, every element of the Asserted Claims, thereby anticipating those claims. Additionally, each of the primary references alone (including in combination with the knowledge of a person of ordinary skill in the art) renders obvious the Asserted Claims. To the extent Plaintiff contends that any primary reference does not anticipate or render obvious the Asserted Claims as set forth above, it would have been obvious to combine or modify the primary references with concepts from other prior art, as explained throughout these Invalidity Contentions. In particular, for each limitation of the Asserted Claims that Plaintiff contends is not met by a particular primary reference, Defendants contend that the limitation (and claim as a whole) is obvious based on a combination of that particular primary reference with (1) any other primary reference disclosing that limitation, (2) any reference identified and/or relied on in the

primary references as disclosing that limitation, (3) any statements made in the intrinsic record of the Asserted Patent, and/or (4) the knowledge of one of ordinary skill in the art (as explained in additional detail below).

It would have been obvious to try combining the prior art references identified above because there were only a finite number of predictable solutions and/or because known work in one field or endeavor prompted variations based on predictable design incentives and/or market forces either in the same field or a different one. Each of the references identified in these Invalidity Contentions are directed to the same field of endeavor (*e.g.*, field of wireless communications, and more specifically, pre-compensation and/or predistortion systems and methods for multiple-input multiple-output ("MIMO") systems). *See* '857 Patent, 1:15–20. The solutions identified in the prior art utilize the same components and techniques that are identified in the '857 Patent. Thus, as set forth in the aforementioned claim charts, a person of ordinary skill in the art would be motivated to look for solutions in other references in that field or that solve the same alleged problems.

Relatedly, one of ordinary skill in the art would have been motivated to create combinations identified in these contentions using: known methods to yield predictable results; known techniques in the same way; a simple substitution of one known, equivalent element for another to obtain predictable results; and/or teaching, suggestion, or motivation in the prior art generally. Also, market forces in the industry, and the desire to improve features and performance, would motivate the addition of features to systems as they become available, become smaller, become less expensive, become more commonly used, provide better performance, reduce costs, or predictably achieve other clearly desirable results.

The following includes examples of combinations that one of ordinary skill in the art would

have found obvious, in particular with respect to Asserted Claims 1–15 of the ’857 Patent:

- McCallister, alone or in combination with Hibino, Wright, Sadri, Jelonnek, Cendrillon 1, Cendrillon 2, Cendrillon 3, Uchida, Ho, and/or Van Zelm render obvious the Asserted Claims of the ’857 Patent.
- Hibino, alone or in combination with McCallister, Wright, Sadri, Jelonnek, Cendrillon 1, Cendrillon 2, Cendrillon 3, Uchida, Ho, and/or Van Zelm render obvious the Asserted Claims of the ’857 Patent.
- Wright, alone or in combination with McCallister, Hibino, Sadri, Jelonnek, Cendrillon 1, Cendrillon 2, Cendrillon 3, Uchida, Ho, and/or Van Zelm render obvious the Asserted Claims of the ’857 Patent.
- Sadri, alone or in combination with McCallister, Hibino, Wright, Jelonnek, Cendrillon 1, Cendrillon 2, Cendrillon 3, Uchida, Ho, and/or Van Zelm render obvious the Asserted Claims of the ’857 Patent.
- Jelonnek, alone or in combination with McCallister, Hibino, Wright, Sadri, Cendrillon 1, Cendrillon 2, Cendrillon 3, Uchida, Ho, and/or Van Zelm render obvious the Asserted Claims of the ’857 Patent.
- Van Zelm alone or in combination with McCallister, Hibino, Wright, Sadri, Cendrillon 1, Cendrillon 2, Cendrillon 3, Uchida, Ho, and/or Jelonnek render obvious the Asserted Claims of the ’857 Patent.

All of the items of prior art above are directed to wireless communications and pre-compensation or predistortion techniques to compensate for impairments introduced in a MIMO systems, in accordance with the purported invention of the ’857 Patent. Combining the known features set forth by these items of prior art would constitute predictable variations contemplated

by the ordinary skill in the art at the time of the alleged invention and would be likely to succeed. Combining the features of any of these items of prior art would constitute the mere combination of known elements according to known methods to yield predictable results. Specific to each such item of prior art, Defendants summarize below the reasons why one of ordinary skill in the art would have been motivated to combine such prior art with the other references in Table C.

a. Motivation for combining with McCallister

One of ordinary skill in the art would have been motivated to combine McCallister with any of the other references in Table C. McCallister discloses, "a digital communications transmitter that includes "a digital linear and nonlinear predistortion section (200, 1800) to compensate for linear and nonlinear distortion introduced by transmitter-analog components." McCallister at Abstract. For example, McCallister explains that the reduction of linear distortion becomes more desirable as a communications signal becomes more wideband; however, conventional receivers failed to address this issue. *Id*. at [0022]–[0023]. McCallister then discloses an improved predistortion circuit and method for compensating for linear and nonlinear distortions, as well as distortion introduced in feedback signals, and through heat-induced memory effects. *Id*. at [0024]–[0028]. McCallister explains that "the benefits of the present invention are best appreciated with forms of modulation where both amplitude and phase are used to digitally convey the information," such as "quadrature-amplitude modulation (QAM), code-division-multiple-access (CDMA), orthogonal-frequency-division modulation (OFDM), multiple-input, multiple-output systems, and the like." *Id*. at [0058]; Fig. 19.

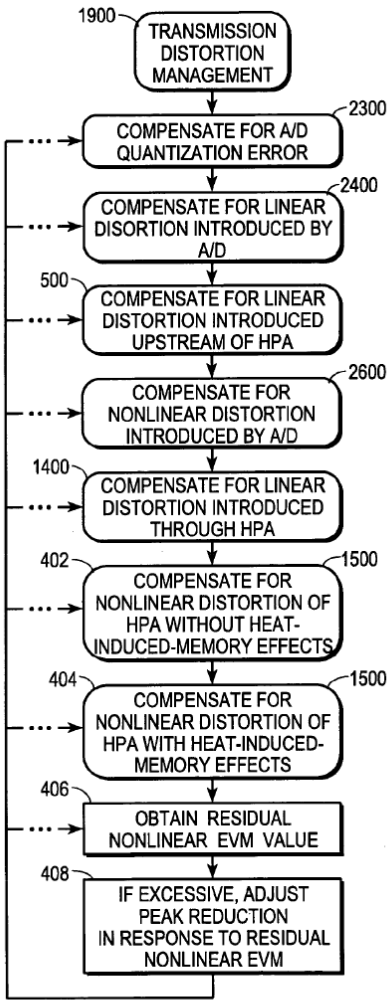

FIG. 19

One of ordinary skill in the art would recognize, in view of McCallister's teachings concerning digital predistortion involving linear and nonlinear components, that predistortion in MIMO RF transmitters could be improved by employing the techniques of McCallister to compensate for linear and nonlinear distortion introduced through A/D conversion, power amplifiers, and heat-induced memory effects. One of ordinary skill in the art would have recognized that a combination with McCallister combines prior art elements according to known methods to yield predictable results. McCallister and the other references use known techniques to improve similar devices or methods in the same way. Moreover, a combination with McCallister was obvious to try because one of skill in the art would have chosen from a finite number of identified, predictable solutions, with a reasonable expectation of success.

b. Motivation for combining with Hibino

One of ordinary skill in the art would have been motivated to combine Hibino with any of the other references in Table C. Hibino discloses a distortion compensation coefficient calculation unit for MIMO transmissions. Hibino at [0041].[12]

---

[12] Defendants' Invalidity Contentions regarding Hibino are based on a machine-generated translation of JP 2006/345066A obtained through Google. Defendants reserve the right to amend these contentions upon obtaining a certified translation.

【図1】

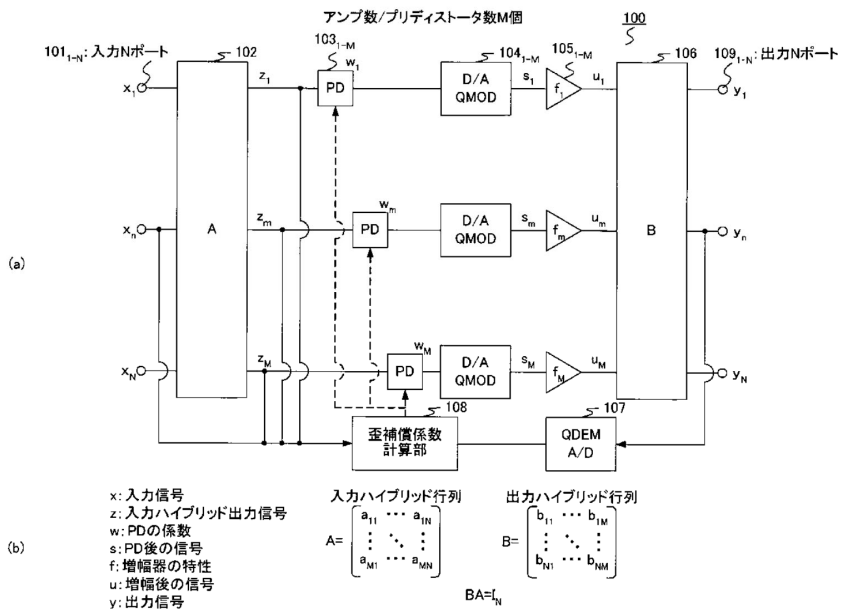

Id. at [Fig. 1]. Hibino explains that its "hybrid distortion compensation method [] performs predistortion processing on a signal input to an amplifier provided between a hybrid power divider and a hybrid power combiner, the hybrid power divider calculating, as an error signal, a difference between any one input signal among the input signals input to the hybrid power combiner and one output signal from the hybrid power combiner corresponding to the one input signal." *Id*. at [0031]. Hibino further explains that the disclosed MIMO predistortion methods may be used in "a transmitter or a mobile communication terminal[.]" *Id*. at [0030].

One of ordinary skill in the art would recognize, in view of Hibino's teachings concerning hybrid predistortion methods in MIMO structures, that predistortion in MIMO RF transmitters could be improved by employing the techniques of Hibino to compensate for linear and nonlinear distortion introduced by amplification and interference between signals in MIMO RF transmitters. One of ordinary skill in the art would have recognized that a combination with Hibino combines prior art elements according to known methods to yield predictable results. Hibino and the other references use known techniques to improve similar devices or methods in the same way.

Moreover, a combination with Hibino was obvious to try because one of skill in the art would have chosen from a finite number of identified, predictable solutions, with a reasonable expectation of success.

c. Motivation for combining with Wright

One of ordinary skill in the art would have been motivated to combine Wright with any of the other references in Table C. Wright discloses "a wideband predistortion system and associated methods for compensating for non-linear characteristics of a power amplifier, including the amplifier's frequency and time dependent AM-AM and AM-PM distortion characteristics." Wright at 2:25-37. Wright explains that "the predistortion architecture is used to compensate for nonlinearities in each amplification chain of an antenna array system." *Id.* at 3:10-19.

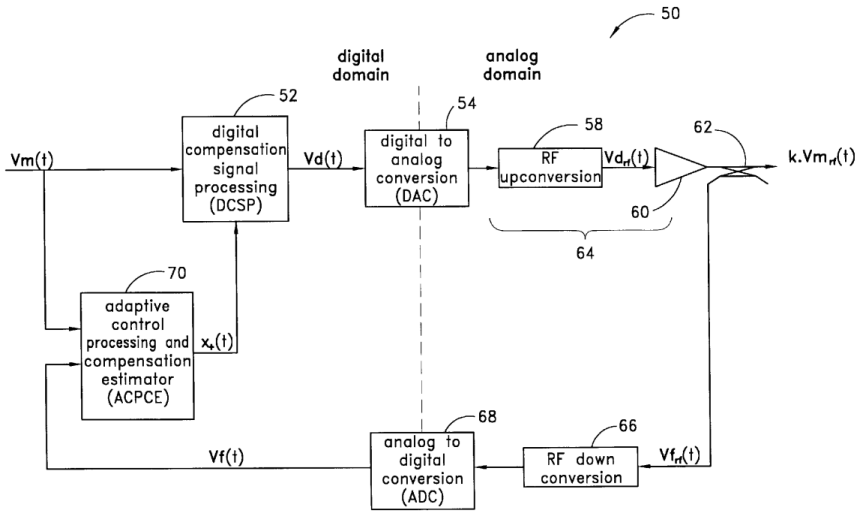

FIG. 1

Id. at Fig. 1. Wright further discloses an "Adaptive Control Processing and Compensation Estimator (ACPCE)" that "is responsible for, among other things, estimating of the behavior of the amplification chain 64, including both linear and nonlinear imperfections." *Id.* at 8:33-43. The ACPCE contains "a vector of the latest estimates of the correction parameter values" that are later

used to perform predistortion of the input signals. *Id.* at 10:44-11:10.

One of ordinary skill in the art would recognize, in view of Wright's teachings concerning hybrid predistortion methods in MIMO structures, that predistortion in MIMO RF transmitters could be improved by employing the techniques of Wright to compensate for linear and nonlinear distortion introduced by amplification and interference between signals in MIMO RF transmitters. One of ordinary skill in the art would have recognized that a combination with Wright combines prior art elements according to known methods to yield predictable results. Wright and the other references use known techniques to improve similar devices or methods in the same way. Moreover, a combination with Wright was obvious to try because one of skill in the art would have chosen from a finite number of identified, predictable solutions, with a reasonable expectation of success.

d. Motivation for combining with Sadri

One of ordinary skill in the art would have been motivated to combine Sadri with any of the other references in Table C. Sadri discloses "a crosstalk suppression scheme to reduce or cancel crosstalk for a multiple input multiple output (MIMO) . . . wireless communication system." Sadri at 2. Sadri explains that "[t]he performance of a MIMO system may be significantly increased by reducing the amount of crosstalk in the MIMO channel." *Id*. at 1. For example, Sadri discloses that "channel estimators 116 and 118 may be used to perform channel characterization for MIMO channel 108 in an effort to estimate potential crosstalk noise," and that the estimated MIMO channel impulse responses may be used "to assist in reducing or canceling crosstalk noise at a receiver coupled to [a] MIMO channel 108." *Id*. at 7; Fig. 3. Sadri further explains that although specific embodiments or the crosstalk compensation scheme are described, "it can be appreciated that any type of communication system employing a MIMO channel may be used and still fall within the intended scope of the embodiments." *Id*. at 5.

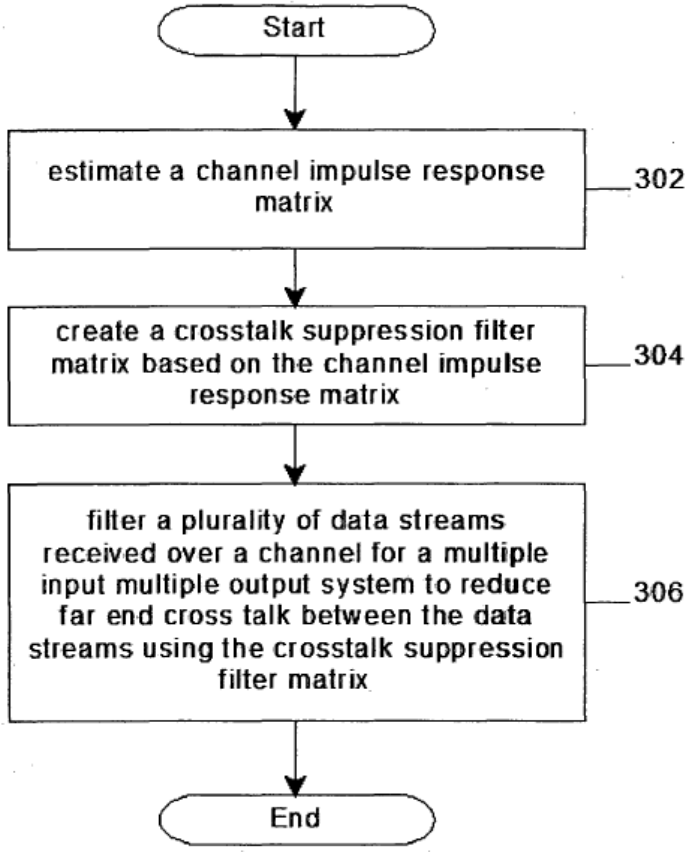

One of ordinary skill in the art would recognize, in view of Sadri's teachings concerning crosstalk suppression techniques in MIMO systems, that interference and/or crosstalk in RF transmitters could be reduced by pre-compensating and/or predistorting signals in a MIMO or dual band system. One of ordinary skill in the art would have recognized that a combination with Sadri

combines prior art elements according to known methods to yield predictable results. Sadri and the other references use known techniques to improve similar devices or methods in the same way. Moreover, a combination with Sadri was obvious to try because one of skill in the art would have chosen from a finite number of identified, predictable solutions, with a reasonable expectation of success.

e. Motivation for combining with Jelonnek

One of ordinary skill in the art would have been motivated to combine Jelonnek with any of the other references in Table C. Jelonnek discloses "a system and method for digital predistortion of a complex baseband signal which is fed to a transmit power amplifier to create a high-frequency multicarrier transmit signal such that the multicarrier transmit signal is generated cost effectively and in this case interference is suppressed both in a useful frequency band and only slight harmonic distortion components occur in an ambient frequency range." Jelonnek at 2:33–42. Jelonnek explains that the methods disclosed may be used to reduce "[p]arasitic effects, such as for example a crosstalk of a mixed frequency in a mixed output signal." *Id*. at 5:50–67. In addition, Jelonnek explains that the procedures described can be applied to systems with multiple output signals and that various modifications may be effected without departing from the scope and spirit of the invention. *Id*. at 13:46–14:6; 14:15–22.

One of ordinary skill in the art would recognize, in view of Jelonnek's teachings concerning distortion and crosstalk suppression techniques in multicarrier systems, that nonlinear and linear processing techniques could be employed in RF transmitters in order to reduce interference and/or crosstalk in a MIMO or dual-band system. One of ordinary skill in the art would have recognized that a combination with Jelonnek combines prior art elements according to known methods to yield predictable results. Jelonnek and the other references use known techniques to improve similar devices or methods in the same way. Moreover, a combination with Jelonnek was obvious to try

because one of skill in the art would have chosen from a finite number of identified, predictable solutions, with a reasonable expectation of success.

f. Motivation for combining with any of Cendrillon 1, Cendrillon 2, Cendrillon 3, Uchida and/or Ho

One of ordinary skill in the art would have been motivated to combine Cendrillon 1, Cendrillon 2, Cendrillon 3, Uchida and/or Ho with any of the other references in Table C. Cendrillon 1, Cendrillon 2, Cendrillon 3, Uchida and/or Ho each identify the problem of interference or "crosstalk" between signals, then propose solutions to eliminate or mitigate such interference. *See, e.g.,* Cendrillon 1 at Abstract ("Crosstalk is the major source of performance degradation in VDSL. In downstream transmission crosstalk precoding can be applied. The transmitted signal is predistorted, such that the predistortion annihilates with the crosstalk introduced in the binder."); *id*. at 3 ("This paper presents an alternative linear precoder based on a channel diagonalizing criterion.").

One of ordinary skill in the art would recognize, in view of Cendrillon 1, Cendrillon 2, Cendrillon 3, Uchida and/or Ho concerning solutions to the problem or interference/crosstalk between signals could be applied to address issues of interference between signals in MIMO RF transmitters. One of ordinary skill in the art would have recognized that a combination with Cendrillon 1, Cendrillon 2, Cendrillon 3, Uchida and/or Ho combines prior art elements according to known methods to yield predictable results. Cendrillon 1, Cendrillon 2, Cendrillon 3, Uchida and/or Ho and the other references use known techniques to improve similar devices or methods in the same way. Moreover, a combination with Cendrillon 1, Cendrillon 2, Cendrillon 3, Uchida and/or Ho was obvious to try because one of skill in the art would have chosen from a finite number of identified, predictable solutions, with a reasonable expectation of success.

g. Motivation for combining with Van Zelm

One of ordinary skill in the art would have been motivated to combine Van Zelm with any of the other references in Table C. Van Zelm discloses "a signal transmission system and method using a reduced number of feedback loops to decrease nonlinear signal combining and crosstalk, increase signal processing capacity, and reduce system cost." Van Zelm at 2:61-64. Van Zelm explains that the disclosed system utilizes hybrid digital pre-distortion matrix in a multiple input multiple output system, "[w]hen one transmitter 320 or one NL PA [nonlinear PA] 324 fails, the remaining combined signals from the DHM [digital hybrid matrix] may be amplified by the remaining NL PAs." *Id*. at 7:63-8:5. Van Zelm further explains that by reducing the feedback loops associated with each transmitter, the system "may have higher signal processing capacity with less nonlinear signal combining and crosstalk, which may be introduced by a reduced number of feedback components, e.g., feedback circuitry and adaptive controllers." *Id*. at 8:41-48 (further explaining that the reduced number of feedback components may also reduce the cost of the radio system). In addition, Van Zelm explains that the techniques described can be applied to using conventional, general purpose components and that many variations and modifications are possible without departing from the scope of the invention. *Id*. at 13:19-35, 13:50-64, 14:10-17.

One of ordinary skill in the art would recognize, in view of Van Zelm's teachings concerning distortion and crosstalk suppression techniques in multicarrier systems, that nonlinear and linear processing techniques would be employed in RF transmitters in order to reduce interference and/or crosstalk in a MIMO or dual-band system. One of ordinary skill in the art would have recognized that a combination with Van Zelm combines prior art elements according to known methods to yield predictable results. Van Zelm and the other references use known techniques to improve similar devices or methods in the same way. Moreover, a combination with Van Zelm was obvious to try because one of skill in the art would have chosen from a finite number

of identified, predictable solutions, with a reasonable expectation of success.

4. The ’204 Patent

The primary references identified above, as further described in the Exhibits, each disclose, either expressly or inherently, every element of the Asserted Claims, thereby anticipating those claims. Additionally, each of the primary references alone (including in combination with the knowledge of a person of ordinary skill in the art) renders obvious the Asserted Claims. To the extent Plaintiff contends that any primary reference does not anticipate or render obvious the Asserted Claims as set forth above, it would have been obvious to combine or modify the primary references with concepts from other prior art, as explained throughout these Invalidity Contentions. In particular, for each limitation of the Asserted Claims that Plaintiff contends is not met by a particular primary reference, Defendants contend that the limitation (and claim as a whole) is obvious based on a combination of that particular primary reference with (1) any other primary reference disclosing that limitation, (2) any reference identified and/or relied on in the primary references as disclosing that limitation, (3) any statements made in the intrinsic record of the Asserted Patent, and/or (4) the knowledge of one of ordinary skill in the art (as explained in additional detail below).

It would have been obvious to try combining the prior art references identified above because there were only a finite number of predictable solutions and/or because known work in one field or endeavor prompted variations based on predictable design incentives and/or market forces either in the same field or a different one. Each of the references identified in these Invalidity Contentions are directed to the same field of endeavor (*e.g.*, “multiple branch digital predistortion linearization architecture and digital signal processing algorithms for impairment-free operation and linearized multi-band transmitter.”). ’204 Patent at 3:42-45. The solutions identified in the prior art utilize the same components and techniques that are identified in the ’204

Patent. Thus, as set forth in the aforementioned claim charts, a person of ordinary skill in the art would be motivated to look for solutions in other references in that field or that solve the same alleged problems.

Relatedly, one of ordinary skill in the art would have been motivated to create combinations identified in these contentions using: known methods to yield predictable results; known techniques in the same way; a simple substitution of one known, equivalent element for another to obtain predictable results; and/or teaching, suggestion, or motivation in the prior art generally. Also, market forces in the industry, and the desire to improve features and performance, would motivate the addition of features to systems as they become available, become smaller, become less expensive, become more commonly used, provide better performance, reduce costs, or predictably achieve other clearly desirable results.

The following includes examples of combinations that one of ordinary skill in the art would have found obvious, in particular with respect to Asserted Claims of the ’204 Patent:

- Woo, alone or in combination with Ceylan, Gupta, Cidronali, Wang, Maltsev, Peroulas, Hongo, Kim, Bassam, Zhurbenko, Altera, Barrak, Jelonnek, Fang, McCallister, Eidson, Obernosterer, Jeckeln ’345, Zhu, Choi, Bassam ’857, Xin, Jelonnek ’375, Kilambi, Posti, and/or Ahmed, render obvious the Asserted Claims of the ’204 Patent.
- Ceylan, alone or in combination with Woo, Gupta, Cidronali, Wang, Maltsev, Peroulas, Hongo, Kim, Bassam, Zhurbenko, Altera, Barrak, Jelonnek, Fang, McCallister, Eidson, Obernosterer, Jeckeln ’345, Zhu, Choi, Bassam ’857, Xin, Jelonnek ’375, Kilambi, Posti, and/or Ahmed, render obvious the Asserted Claims of the ’204 Patent.

- Gupta, alone or in combination with Ceylan, Woo, Cidronali, Wang, Maltsev, Peroulas, Hongo, Kim, Bassam, Zhurbenko, Altera, Barrak, Jelonnek, Fang, McCallister, Eidson, Obernosterer, Jeckeln ’345, Zhu, Choi, Bassam ’857, Xin, Jelonnek ’375, Kilambi, Posti, and/or Ahmed, render obvious the Asserted Claims of the ’204 Patent.
- Cidronali, alone or in combination with Ceylan, Gupta, Woo, Wang, Maltsev, Peroulas, Hongo, Kim, Bassam, Zhurbenko, Altera, Barrak, Jelonnek, Fang, McCallister, Eidson, Obernosterer, Jeckeln ’345, Zhu, Choi, Bassam ’857, Xin, Jelonnek ’375, Kilambi, Posti, and/or Ahmed, render obvious the Asserted Claims of the ’204 Patent.
- Wang, alone or in combination with Ceylan, Gupta, Cidronali, Woo, Maltsev, Peroulas, Hongo, Kim, Bassam, Zhurbenko, Altera, Barrak, Jelonnek, Fang, McCallister, Eidson, Obernosterer, Jeckeln ’345, Zhu, Choi, Bassam ’857, Xin, Jelonnek ’375, Kilambi, Posti, and/or Ahmed, render obvious the Asserted Claims of the ’204 Patent.
- Maltsev, alone or in combination with Ceylan, Gupta, Cidronali, Wang, Woo, Peroulas, Hongo, Kim, Bassam, Zhurbenko, Altera, Barrak, Jelonnek, Fang, McCallister, Eidson, Obernosterer, Jeckeln ’345, Zhu, Choi, Bassam ’857, Xin, Jelonnek ’375, Kilambi, Posti, and/or Ahmed, render obvious the Asserted Claims of the ’204 Patent.
- Peroulas, alone or in combination with Ceylan, Gupta, Cidronali, Wang, Maltsev, Woo, Hongo, Kim, Bassam, Zhurbenko, Altera, Barrak, Jelonnek, Fang, McCallister, Eidson, Obernosterer, Jeckeln ’345, Zhu, Choi, Bassam ’857, Xin,

Jelonnek ’375, Kilambi, Posti, and/or Ahmed, render obvious the Asserted Claims of the ’204 Patent.

- Hongo, alone or in combination with Ceylan, Gupta, Cidronali, Wang, Maltsev, Peroulas, Woo, Kim, Bassam, Zhurbenko, Altera, Barrak, Jelonnek, Fang, McCallister, Eidson, Obernosterer, Jeckeln ’345, Zhu, Choi, Bassam ’857, Xin, Jelonnek ’375, Kilambi, Posti, and/or Ahmed, render obvious the Asserted Claims of the ’204 Patent.
- Kim, alone or in combination with Ceylan, Gupta, Cidronali, Wang, Maltsev, Peroulas, Hongo, Woo, Bassam, Zhurbenko, Altera, Barrak, Jelonnek, Fang, McCallister, Eidson, Obernosterer, Jeckeln ’345, Zhu, Choi, Bassam ’857, Xin, Jelonnek ’375, Kilambi, Posti, and/or Ahmed, render obvious the Asserted Claims of the ’204 Patent.
- Bassam, alone or in combination with Ceylan, Gupta, Cidronali, Wang, Maltsev, Peroulas, Hongo, Kim, Woo, Zhurbenko, Altera, Barrak, Jelonnek, Fang, McCallister, Eidson, Obernosterer, Jeckeln ’345, Zhu, Choi, Bassam ’857, Xin, Jelonnek ’375, Kilambi, Posti, and/or Ahmed, render obvious the Asserted Claims of the ’204 Patent.
- Zhurbenko, alone or in combination with Ceylan, Gupta, Cidronali, Wang, Maltsev, Peroulas, Hongo, Kim, Bassam, Woo, Altera, Barrak, Jelonnek, Fang, McCallister, Eidson, Obernosterer, Jeckeln ’345, Zhu, Choi, Bassam ’857, Xin, Jelonnek ’375, Kilambi, Posti, and/or Ahmed, render obvious the Asserted Claims of the ’204 Patent.
- Altera, alone or in combination with Ceylan, Gupta, Cidronali, Wang, Maltsev,

Peroulas, Hongo, Kim, Bassam, Zhurbenko, Woo, Barrak, Jelonnek, Fang, McCallister, Eidson, Obernosterer, Jeckeln ’345, Zhu, Choi, Bassam ’857, Xin, Jelonnek ’375, Kilambi, Posti, and/or Ahmed, render obvious the Asserted Claims of the ’204 Patent.

- Jelonnek, alone or in combination with Ceylan, Gupta, Cidronali, Wang, Maltsev, Peroulas, Hongo, Kim, Bassam, Zhurbenko, Altera, Barrak, Woo, Fang, McCallister, Eidson, Obernosterer, Jeckeln ’345, Zhu, Choi, Bassam ’857, Xin, Jelonnek ’375, Kilambi, Posti, and/or Ahmed, render obvious the Asserted Claims of the ’204 Patent.
- Fang, alone or in combination with Ceylan, Gupta, Cidronali, Wang, Maltsev, Peroulas, Hongo, Kim, Bassam, Zhurbenko, Altera, Barrak, Jelonnek, Woo, McCallister, Eidson, Obernosterer, Jeckeln ’345, Zhu, Choi, Bassam ’857, Xin, Jelonnek ’375, Kilambi, Posti, and/or Ahmed, render obvious the Asserted Claims of the ’204 Patent.
- McCallister alone or in combination with Ceylan, Gupta, Cidronali, Wang, Maltsev, Peroulas, Hongo, Kim, Bassam, Zhurbenko, Altera, Barrak, Jelonnek, Woo, Fang, Eidson, Obernosterer, Jeckeln ’345, Zhu, Choi, Bassam ’857, Xin, Jelonnek ’375, Kilambi, Posti, and/or Ahmed, render obvious the Asserted Claims of the ’204 Patent.
- Eidson, alone or in combination with Ceylan, Gupta, Cidronali, Wang, Maltsev, Peroulas, Hongo, Kim, Bassam, Zhurbenko, Altera, Barrak, Jelonnek, Woo, McCallister, Fang, Obernosterer, Jeckeln ’345, Zhu, Choi, Bassam ’857, Xin, Jelonnek ’375, Kilambi, Posti, and/or Ahmed, render obvious the Asserted Claims

of the ’204 Patent.

- Obernosterer, alone or in combination with Ceylan, Gupta, Cidronali, Wang, Maltsev, Peroulas, Hongo, Kim, Bassam, Zhurbenko, Altera, Barrak, Jelonnek, Woo, McCallister, Eidson, Fang, Jeckeln ’345, Zhu, Choi, Bassam ’857, Xin, Jelonnek ’375, Kilambi, Posti, and/or Ahmed, render obvious the Asserted Claims of the ’204 Patent.
- Jeckeln ’345, alone or in combination with Ceylan, Gupta, Cidronali, Wang, Maltsev, Peroulas, Hongo, Kim, Bassam, Zhurbenko, Altera, Barrak, Jelonnek, Woo, McCallister, Eidson, Obernosterer, Fang, Zhu, Choi, Bassam ’857, Xin, Jelonnek ’375, Kilambi, Posti, and/or Ahmed, render obvious the Asserted Claims of the ’204 Patent.
- Zhu, alone or in combination with Ceylan, Gupta, Cidronali, Wang, Maltsev, Peroulas, Hongo, Kim, Bassam, Zhurbenko, Altera, Barrak, Jelonnek, Woo, McCallister, Eidson, Obernosterer, Fang, Jeckeln ’345 , Choi, Bassam ’857, Xin, Jelonnek ’375, Kilambi, Posti, and/or Ahmed, render obvious the Asserted Claims of the ’204 Patent.
- Choi, alone or in combination with Ceylan, Gupta, Cidronali, Wang, Maltsev, Peroulas, Hongo, Kim, Bassam, Zhurbenko, Altera, Barrak, Jelonnek, Woo, McCallister, Eidson, Obernosterer, Fang, Jeckeln ’345 , Zhu, Bassam ’857, Xin, Jelonnek ’375, Kilambi, Posti, and/or Ahmed, render obvious the Asserted Claims of the ’204 Patent.
- Bassam ’857, alone or in combination with Ceylan, Gupta, Cidronali, Wang, Maltsev, Peroulas, Hongo, Kim, Bassam, Zhurbenko, Altera, Barrak, Jelonnek,

Woo, McCallister, Eidson, Obernosterer, Fang, Jeckeln ’345 , Choi, Zhu, Xin, Jelonnek ’375, Kilambi, Posti, and/or Ahmed, render obvious the Asserted Claims of the ’204 Patent.

- Xin, alone or in combination with Ceylan, Gupta, Cidronali, Wang, Maltsev, Peroulas, Hongo, Kim, Bassam, Zhurbenko, Altera, Barrak, Jelonnek, Woo, McCallister, Eidson, Obernosterer, Fang, Jeckeln ’345 , Choi, Bassam ’857, Zhu, Jelonnek ’375, Kilambi, Posti, and/or Ahmed, render obvious the Asserted Claims of the ’204 Patent.
- Jelonnek ’375, alone or in combination with Ceylan, Gupta, Cidronali, Wang, Maltsev, Peroulas, Hongo, Kim, Bassam, Zhurbenko, Altera, Barrak, Jelonnek, Woo, McCallister, Eidson, Obernosterer, Fang, Jeckeln ’345 , Choi, Bassam ’857, Xin, Zhu, Kilambi, Posti, and/or Ahmed, render obvious the Asserted Claims of the ’204 Patent.
- Kilambi, alone or in combination with Ceylan, Gupta, Cidronali, Wang, Maltsev, Peroulas, Hongo, Kim, Bassam, Zhurbenko, Altera, Barrak, Jelonnek, Woo, McCallister, Eidson, Obernosterer, Fang, Jeckeln ’345 , Choi, Bassam ’857, Xin, Jelonnek ’375, Zhu, Posti, and/or Ahmed, render obvious the Asserted Claims of the ’204 Patent.
- Posti, alone or in combination with Ceylan, Gupta, Cidronali, Wang, Maltsev, Peroulas, Hongo, Kim, Bassam, Zhurbenko, Altera, Barrak, Jelonnek, Woo, McCallister, Eidson, Obernosterer, Fang, Jeckeln ’345 , Choi, Bassam ’857, Xin, Jelonnek ’375, Kilambi, Zhu, and/or Ahmed, render obvious the Asserted Claims of the ’204 Patent.

All of the items of prior art above are directed to systems and methods for pre-distorting RF modulated signals to compensate for the behavior of a power amplifier, in accordance with the purported invention of the ’204 Patent. Combining the known features set forth by these items of prior art would constitute predictable variations contemplated by the ordinary skill in the art at the time of the alleged invention and would be likely to succeed. Combining the features of any of these items of prior art would constitute the mere combination of known elements according to known methods to yield predictable results. Specific to each such item of prior art, Defendants summarize below the reasons why one of ordinary skill in the art would have been motivated to combine such prior art with the other references in Table D.

a. Motivation for combining with Woo

One of ordinary skill in the art would have been motivated to combine Woo with any of the other references in Table D. Woo discloses a new adaptive digital predistortion (DPD) linearization technique based on analog feedback predistortion (FBPD). *See* Woo at Abstract. For example, Woo discloses, “a new digital adaptive PD technique by employing analog feedback predistortion (FBPD) theory in the digital domain” where the “analog FBPD linearization method can accurately extract the PD signal and enhance the tolerance of the intermodulation (IM) distortion cancellation by the feedback linearization.” *Id.* at 932.

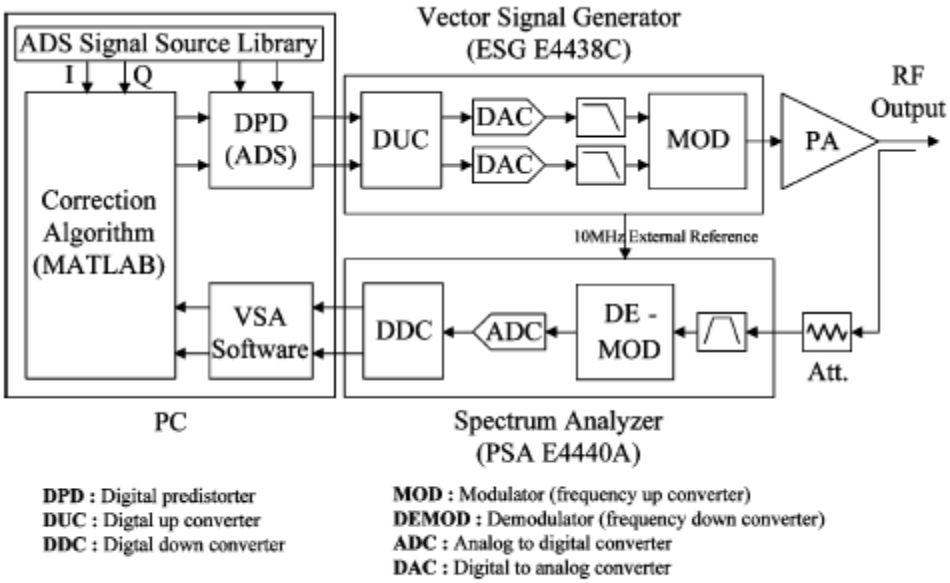

Fig. 9. Experimental setup of the DPD and FBPD.

As depicted in Fig. 9, Woo discloses a proposed digital feedback predistortion technique which accurately extract the predistortion signal and enhance the tolerance of intermodulation distortion cancellation by the feedback linearization. *Id.* at 933, 938, Fig. 9. One of ordinary skill in the art would be motivated to combine the teachings of Woo with other references disclosing digital predistortion and sampling techniques. One of ordinary skill in the art would have recognized that a combination with Woo combines known prior art elements according to known methods to yield predictable results. Woo and the other references identified in Table D use known techniques to improve similar devices or methods in the same way. Moreover, a combination with Woo was obvious to try because one of skill in the art would have chosen from a finite number of identified, predictable solutions, with a reasonable expectation of success.

b. Motivation for combining with Ceylan

One of ordinary skill in the art would have been motivated to combine Ceylan with any of the other references in Table D. Ceylan discloses an accurate and simple PA characterization method that utilizes look-up table (LUT) based memoryless digital predistortion (MDP) which

provides design flexibility for achieving good linearity and efficiency. *See* Ceylan at Abstract. For example, Ceylan discloses, "adaptive DP is implemented in a mobile communications terminal using an additional feedback path." *Id.* at 117.

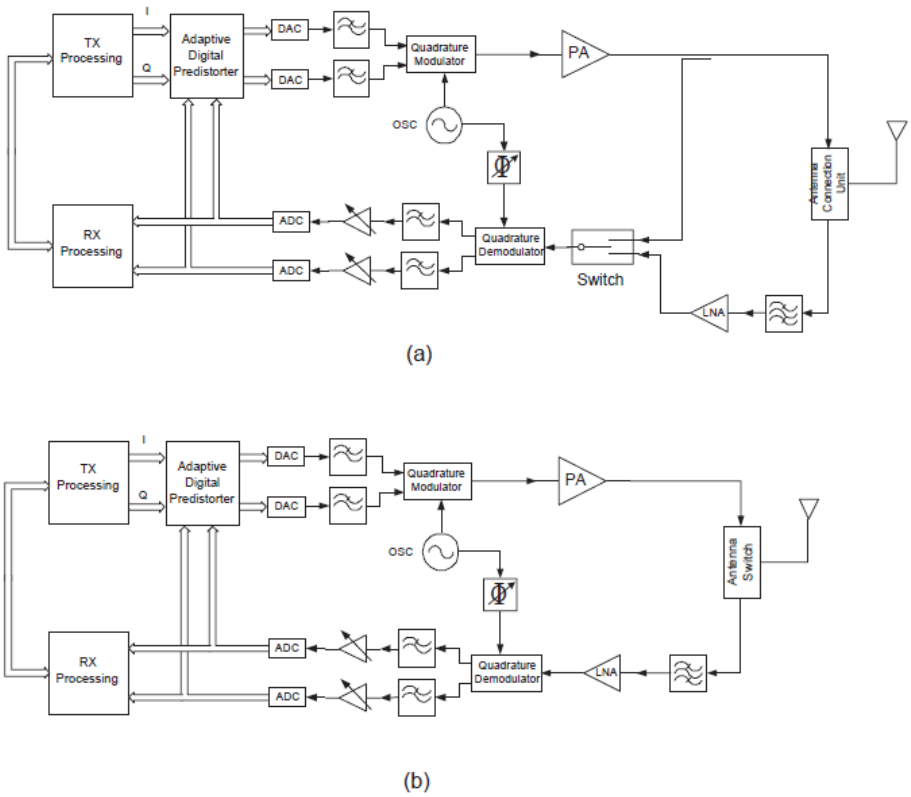

Figure 6.37: Block diagram of closed-loop digital predistortion implemented in a TDMA based system (a) with an additional coupler and a switch unit and (b) without additional components in the feedback path.

The teachings of Ceylan address the same problems and solutions as identified by the '204 Patent, which are aimed at linearization of a transmitter power amplifier in a high performance and efficient manner. One of ordinary skill in the art would have recognized that a combination with Ceylan combines known prior art elements according to known methods to yield predictable results. Ceylan and the other references identified in Table D use known techniques to improve similar devices or methods in the same way. Moreover, a combination with Ceylan was obvious to try because one of skill in the art would have chosen from a finite number of identified,

predictable solutions, with a reasonable expectation of success.

c. Motivation for combining with Gupta

One of ordinary skill in the art would have been motivated to combine Gupta with any of the other references in Table D. Gupta teaches "[a] new system architecture is presented for an RF transceiver in a wireless communication base station, wherein ultrafast multi-GHz digital data conversion and processing are carried out in a central ground station, and analog-RF amplification is carried out in tower-mounted units close to antennas." Gupta at [0027]. Furthermore, Gupta discloses that a "digital processor may be provided, adapted to predistort the signal to increase an effective spur-free dynamic range of the power radio frequency signal by reducing a power of at least one intermodulation product" wherein the "digital signal processor may comprise an input adapted to receive a feedback signal representing a distorted of the output, and wherein the predistortion is responsive to the feedback signal." *Id.* at [0047], [0066]. *See also id.* at Fig. 4.

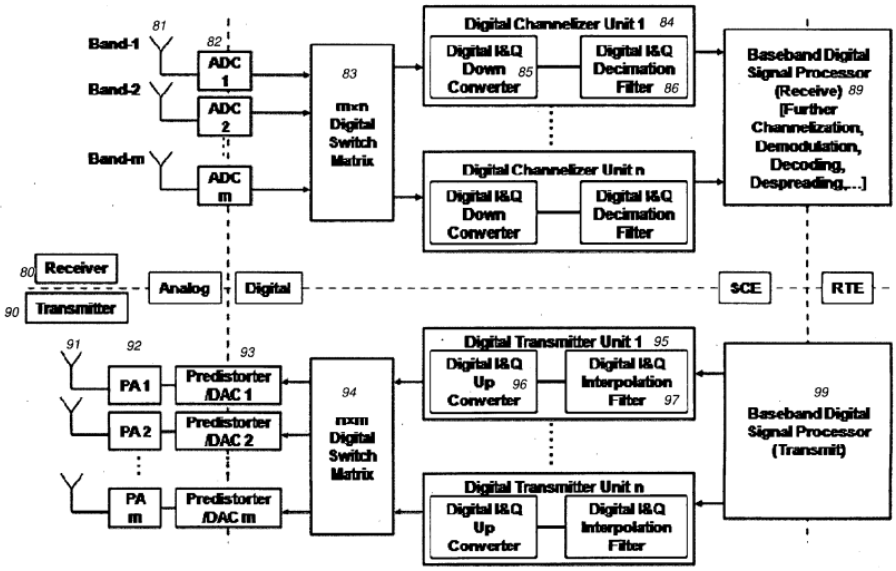

FIG. 4. Digital-RF™ Multichannel Transceiver

Gupta is unequivocally "directed towards radio-frequency (RF) transceivers, and more specifically towards transceivers that use direct digitization of RF signals, and digital processing

thereof." *Id.* at [0002]. The disclosure in Gupta provides "a new architecture for a radio system, leveraging the ultrafast digital-to-analog converter, analog-to-digital converter, and digital signal processing technologies presented herein." *Id.* at [0028]. One of ordinary skill in the art would have recognized that a combination with Gupta combines known prior art elements according to known methods to yield predictable results. Gupta and the other references identified in Table D use known techniques to improve similar devices or methods in the same way. Moreover, a combination with Gupta was obvious to try because one of skill in the art would have chosen from a finite number of identified, predictable solutions, with a reasonable expectation of success.

d. Motivation for combining with Cidronali

One of ordinary skill in the art would have been motivated to combine Cidronali with any of the other references in Table D. Cidronali discloses "a Dual Band Digital Predistorter (DB-DPD), suitable for concurrent dual-band power amplifiers" that includes a "sub-sampling receiver is at the basis of the feedback path, while the vectorial gain adjuster is achieved at the proper digital intermediate frequency." Cidronali at Abstract. The "Dual Band Digital Predistorter" of Cidronali is "capable of a simultaneous predistortion of a concurrent dual-band power amplifier at both frequency bands." *Id.* at 1.

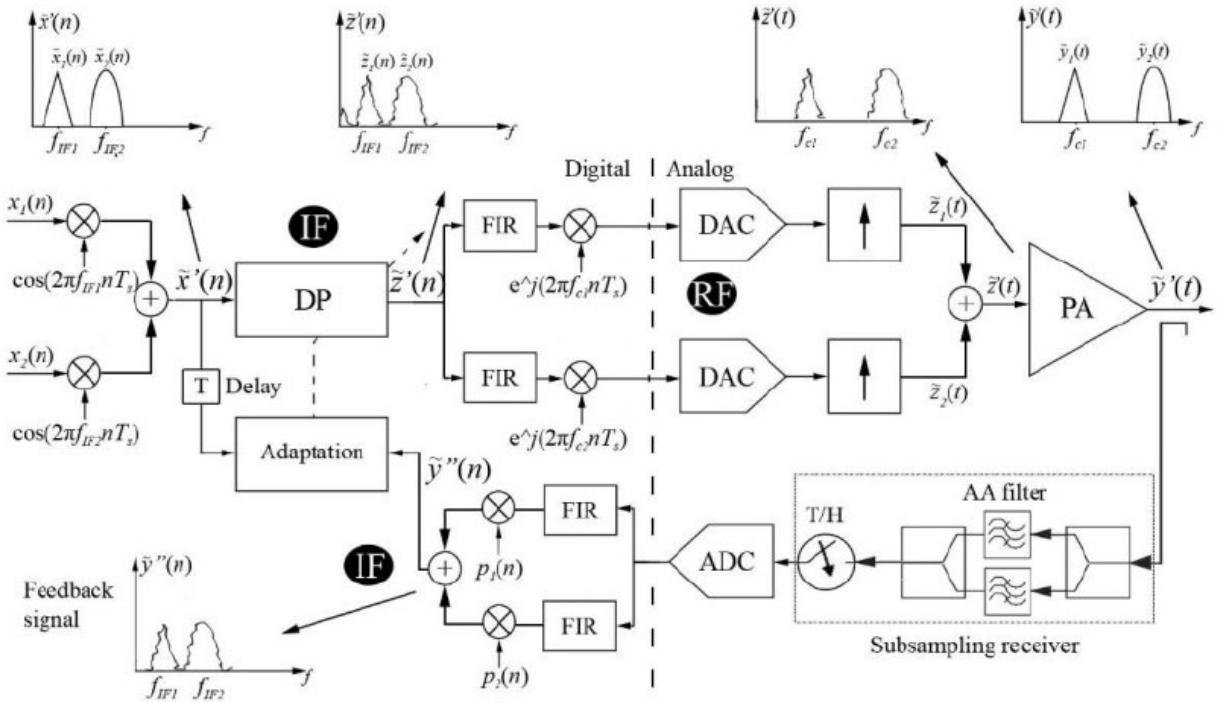

Fig. 4.DB-DP system with IF predistortion and subsampling feedback

As shown in Fig. 4, Cidronali teaches the "The proposed DB-DPD system architecture exploits a memory polynomial predistorter and a subsampling receiver as a feedback path" and "implements a memory polynomial predistorter and a direct learning training method similar to those involved in single band DP." *Id.* at 4. One of ordinary skill in the art would have recognized that a combination with Cidronali combines known prior art elements according to known methods to yield predictable results. Cidronali and the other references identified in Table D use known techniques to improve similar devices or methods in the same way. Moreover, a combination with Cidronali was obvious to try because one of skill in the art would have chosen from a finite number of identified, predictable solutions, with a reasonable expectation of success.

e. Motivation for combining with Wang

One of ordinary skill in the art would have been motivated to combine Wang with any of the other references in Table D. Wang "relates to a wideband adaptive digital predistortion engine

(WADPDE) device based on programmable equipment" that "comprises an input matrix module, a simulation baseband signal transmitter module, an interpolator module, a peak clipping module, a wideband digital predistorter module, an output matrix module, an MPU control kernel module and a USB interface module which are mutually connected by communication buses on a high-speed chip, wherein, the wideband digital predistorter module comprises a filter input generation module, a predistortion filter array module, a filter output combining module, a system buffer module, a DDC module, a delayed match module, a signal data buffer module, an interface control module and a coefficient estimation and updating algorithm module." Wang at Abstract.[13]

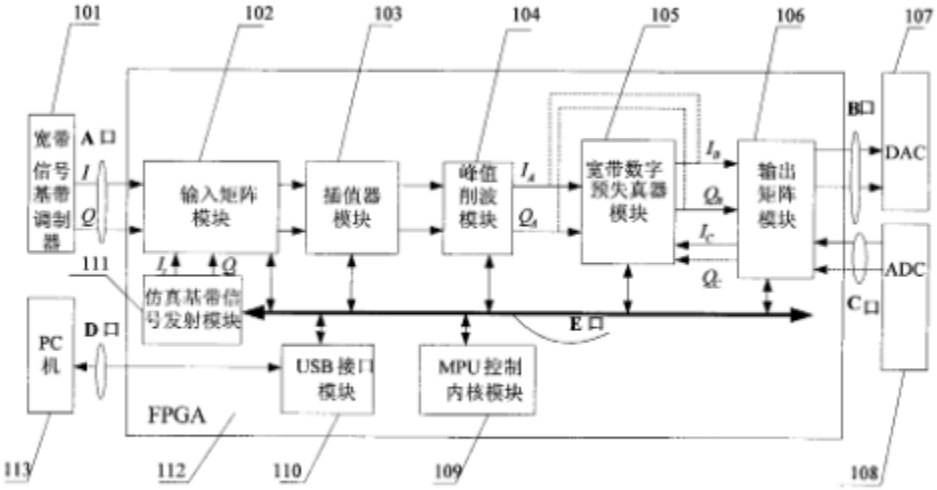

图 1

"As shown in Figure 1, be wideband adaptive digital predistortion engine apparatus structure collectivity block diagram of the present invention" that "is integrated into input matrix module 102, emulation baseband signal transmitter module 111, interpolation device module 103, peak value slicing module 104, wideband digital predistortion device module 105, output matrix

[13] Defendants' Invalidity Contentions regarding Wang are based on a machine-generated translation of CN101286963 obtained through Espacenet. Defendants reserve the right to amend these contentions upon obtaining a certified translation.

module 106, MPU control kernel module 109 and usb interface module 110 among a slice FPGA 112 realizes that these modules all interconnect and be subjected to the control and the scheduling of MPU control kernel module by communication bus E mouth on the high-speed chip." *Id.* at 4-5. Wang teaches a predistortion transmitter that overcomes "deficiencies of the prior art," a Wideband Adaptive Digital Predistortion Engine (WADPDE) device based on a programmable device. *Id.* at 2. One of ordinary skill in the art would have recognized that a combination with Wang combines known prior art elements according to known methods to yield predictable results. Wang and the other references identified in Table D use known techniques to improve similar devices or methods in the same way. Moreover, a combination with Wang was obvious to try because one of skill in the art would have chosen from a finite number of identified, predictable solutions, with a reasonable expectation of success.

f. Motivation for combining with Maltsev

One of ordinary skill in the art would have been motivated to combine Maltsev with any of the other references in Table D. Matlsev "relate[s] to wireless communications generally and, more specifically, to power amplifier linearization methods and apparatus using predistortion in the frequency domain." Maltsev at 1:8-11. Maltsev discloses a transmitter that "comprises an OFDM modulator 302, a predistortion block 304, a block 306 to perform inverse Fast Fourier Transform (IFFT) and to add a guard interval (GI), a digital-to-analog converter (DAC) 308, a first mixer 310, a local oscillator (LO) 312, a power amplifier (PA) 314, an antenna 316, a second mixer 318, an analog-to-digital converter (ADC) 320, and a polynomial approximation block 322." *Id.* at 6:28-35. Maltsev also teaches that "information on the optimized polynomial coefficients then goes to the predistortion block 304." *Id.* at 7:33-44; Fig. 3:

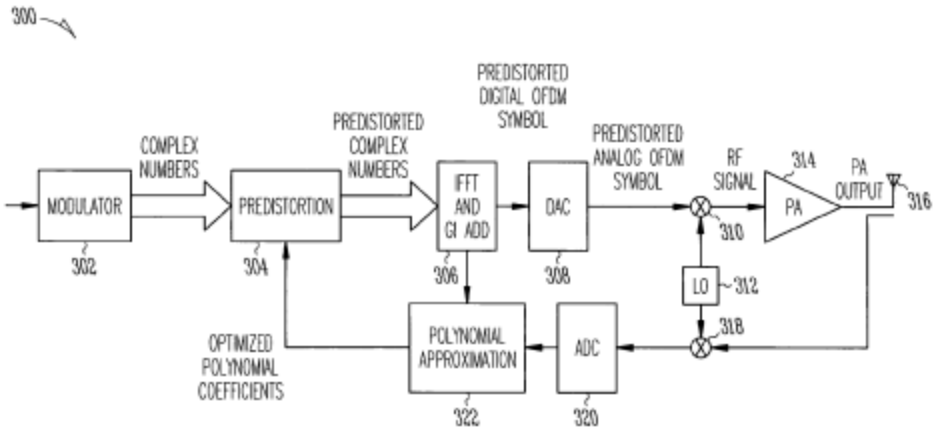

Fig. 3

One of ordinary skill in the art would have recognized that a combination with Maltsev combines known prior art elements according to known methods to yield predictable results. Maltsev and the other references identified in Table D use known techniques to improve similar devices or methods in the same way. Moreover, a combination with Maltsev was obvious to try because one of skill in the art would have chosen from a finite number of identified, predictable solutions, with a reasonable expectation of success.

g. Motivation for combining with Peroulas

One of ordinary skill in the art would have been motivated to combine Peroulas with any of the other references in Table D. Peroulas discloses "a pre-distorter, which comprises: a pre-distortion module, which is configured to pre-distort a plurality of baseband input signals by an equal number of pre-distortion functions to obtain equal number of pre-distorted signals respectively, wherein all of the baseband input signals input into every pre-distortion function, and each pre-distortion function has one output; an adder, which is configured to combine all of the pre-distorted signals output from every pre-distortion functions into one combined signal; and a power amplifier (PA), which is configure to amplify the combined signal, wherein the cascade of the pre-distortion functions and the PA are linear overall." Peroulas at Abstract; Fig. 3:

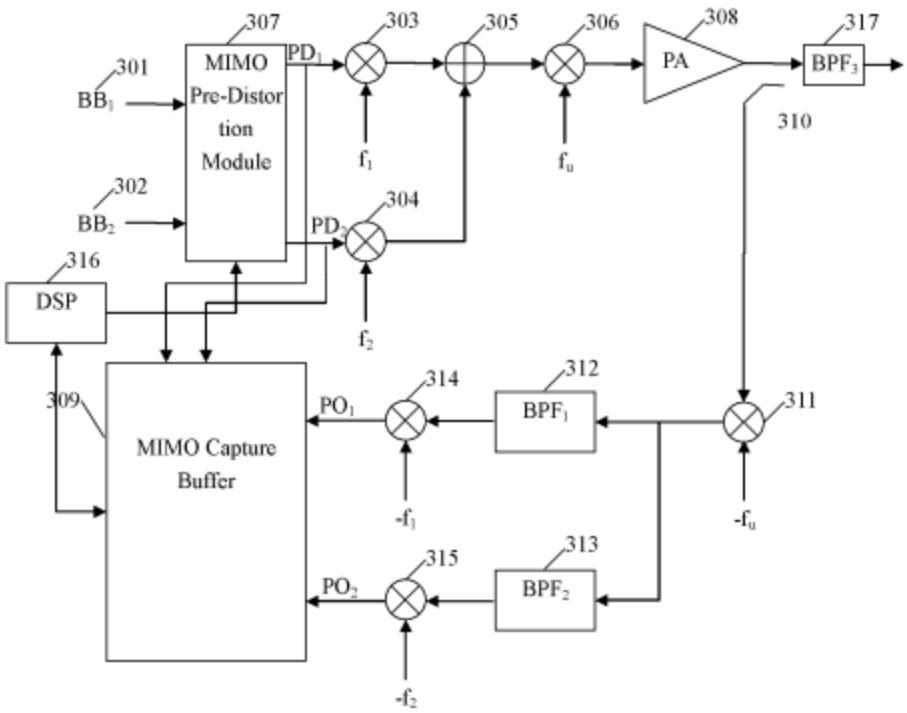

FIG. 3

Peroulas further discloses that a "model is created by capturing the samples of several signals using a MIMO capture buffer 30" and that the "number of samples required to be captured by the MIMO capture buffer 309 varies based on the PA 308 and the type of signals to be transmitted, but typically, between 2000 and 10000 samples of each signal coming into the MIMO capture buffer 309." *Id.* at 25:15-22. One of ordinary skill in the art would have recognized that a combination with Peroulas combines known prior art elements according to known methods to yield predictable results. Peroulas and the other references identified in Table D use known techniques to improve similar devices or methods in the same way. Moreover, a combination with Peroulas was obvious to try because one of skill in the art would have chosen from a finite number of identified, predictable solutions, with a reasonable expectation of success.

h. Motivation for combining with Hongo

One of ordinary skill in the art would have been motivated to combine Hongo with any of

the other references in Table D. Hongo teaches a "distortion compensator for compensating for distortion produced in an amplifier that amplifies a signal includes a signal level detection means for detecting a level of a signal to be amplified and distortion compensation means for conducting distortion compensation based on the detection result separately for each frequency band signal of multiple frequency band signals contained in the signal to be amplified." Hongo at Abstract.

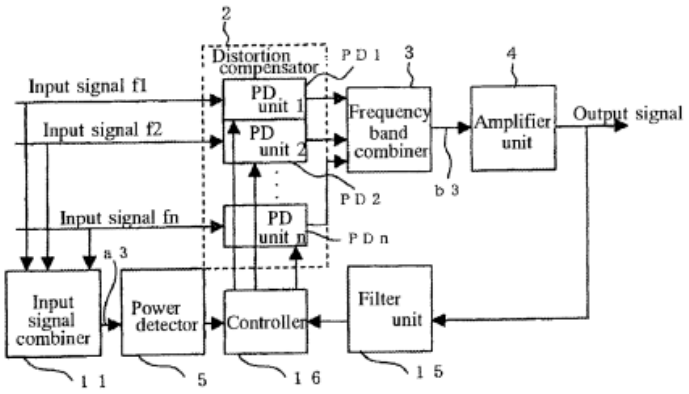

Fig.6

A person of ordinary skill in the art would have identified Hongo because Hongo discloses functional components that were well known in the art. For example, in embodiments depicted in Fig. 6, Hongo discloses a multi-band amplifier device that comprises "a distortion compensator 2 having multiple predistortion units PD1-PDn, a frequency band combiner 3, an amplifier unit 4, a power detector 5, a filter unit 15 and a controller 16" that linearizes across multiple input frequencies. *Id.* at [0183]-[0184]. One of ordinary skill in the art would have recognized that a combination with Hongo combines known prior art elements according to known methods to yield predictable results. Hongo and the other references identified in Table D use known techniques to improve similar devices or methods in the same way. Moreover, a combination with Hongo was obvious to try because one of skill in the art would have chosen from a finite number of identified, predictable solutions, with a reasonable expectation of success.

i. Motivation for combining with Kim

One of ordinary skill in the art would have been motivated to combine Kim with any of the other references in Table D. Kim discloses a "wideband communication systems using multiplexing modulation" and more specifically "a method of increasing instantaneous or operational bandwidth for digital predistortion linearization in order to compensate for nonlinearities and/or memory effects in multi-channel wideband wireless transmitters." Kim at 1:18-24. Similar to the problems identified in the '204 Patent, Kim teaches that the " linearity and efficiency of radio frequency (RF) power amplifiers (PAs) have become critical design issues for non-constant envelope digital modulation schemes with high peak-to-average power ratio (PAR) values" because there is an "increased importance of spectral efficiency in wireless communication systems." *Id.* at 1:25-45. Consequently, Kim discloses that because "RF PAs have nonlinearities which generate amplitude modulation-amplitude modulation (AM-AM) distortion and amplitude modulation-phase modulation (AM-PM) distortion at the output of the PA", "there is a need in the art for improved methods and systems related to communications systems." *Id.* at 1:25-45.

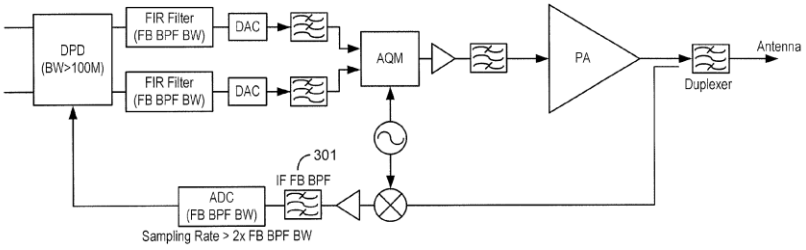

FIG. 3

Id. at Fig. 3.

According to various embodiments, Kim teaches a multiband communications circuit that "utilizes the bandpass characteristic of the duplexer associated with frequency division duplex wireless systems, so that the DPD is only required to provide distortion reduction over the reduced

bandwidth of the PA output signals." *Id.* at 3:23-43. One of ordinary skill in the art would have recognized that a combination with Kim combines known prior art elements according to known methods to yield predictable results. Kim and the other references identified in Table D use known techniques to improve similar devices or methods in the same way. Moreover, a combination with Kim was obvious to try because one of skill in the art would have chosen from a finite number of identified, predictable solutions, with a reasonable expectation of success.

j. Motivation for combining with Bassam

One of ordinary skill in the art would have been motivated to combine Bassam with any of the other references in Table D. Bassam teaches "a novel crossover digital pre- distorter (CO-DPD) model to compensate for crosstalk and nonlinearity in multiple-input multiple-output (MIMO) radio systems." Bassam at Abstract. Consistent with the problems identified in the '204 Patent Bassam notes that the "increasing demand for high data rates in new wireless applications has raised interest in increasing channel capacity by optimizing its spectral efficiency" and that "Multiple-input multiple-output (MIMO) topology is one of the most promising solutions in improving the spectral efficiency of wireless systems." *Id.* at 1119. Bassam notes that the power amplifier is "one of the most challenging blocks in designing a wireless transmitter, and as such, its efficiency significantly affects the overall efficiency of the transmitter." *Id.* at 1120.

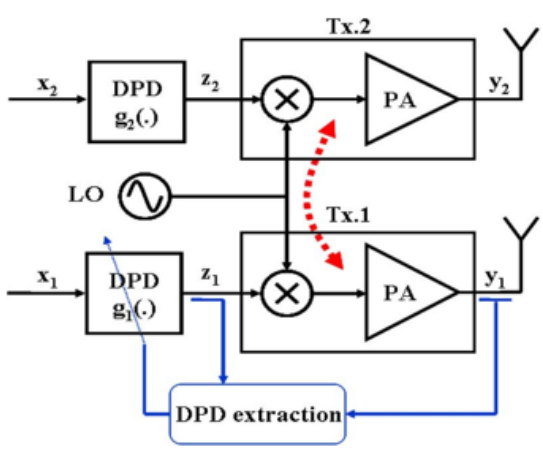

Fig. 5. DPD and PA with nonlinear crosstalk in MIMO system.

Consistent with the alleged novelty of the ’204 Patent, Bassam proposes a linearization technique to improve the efficiency of wireless transmitters by sampling the predistortion module and compensating for the dynamic (memory effect) associated with the wireless transmitter by updating the coefficients in the predistortion module. *Id.* at 1120. One of ordinary skill in the art would have recognized that a combination with Bassam combines known prior art elements according to known methods to yield predictable results. Bassam and the other references identified in Table D use known techniques to improve similar devices or methods in the same way. Moreover, a combination with Bassam was obvious to try because one of skill in the art would have chosen from a finite number of identified, predictable solutions, with a reasonable expectation of success.

k. Motivation for combining with Zhurbenko

One of ordinary skill in the art would have been motivated to combine Zhurbenko with any of the other references in Table D. Zhurbenko discloses a comprehensive overview and detailed analysis associated with the state of the art of wireless communications circuits and system in a textbook entitled “Advanced Microwave Circuits and Systems.” Zhurbenko at 1. Consistent with the technology disclosed in the Asserted Patents, Zhurbenko discusses six aspects associated with the “design and development of active and passive microwave components, integrated circuits, and systems.” Zhurbenko at Preface. In the first two chapters, Zhurbenko discloses alternative concepts and equations for multiport network analysis and characterization. Zhurbenko goes on to discuss the analysis and design of ultra-wideband lownoise amplifiers (LNA), power amplifier design and application, and signal generation and control of linearization effects. *Id*. at Chapters 1-2.

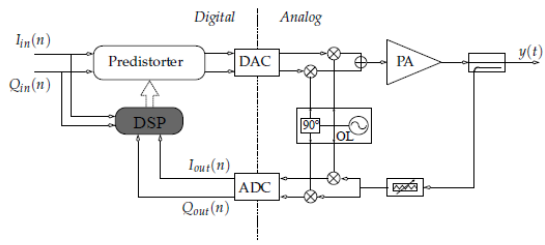

Fig. 12. Adaptive digital baseband predistortion

polynomial approximating the inverse of the PA's characteristics are found, and the DP output $z(n)$ is given by:

$$z(n)=a_1x(n)+a_2x(n)+a_3x(n)+\cdots \quad (12)$$

The coefficients vector a can be found through a recursive algorithm based on the Indirect Learning architecture shown in Fig. 25. The name derives from the fact that the polynomial coefficients are found without passing by the determination of the PA's characteristics.

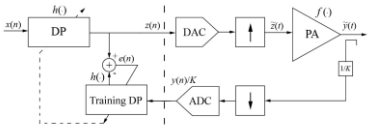

Fig. 25. Indirect Learning schematic principle for a DPD system

Consistent with the alleged novelties claimed in the Asserted Patent, Zhurbenko discloses similar solutions to include using predistortion sampling and power amplifier feedback for updating modeling of the predistortion module and improving linearization of the power amplifier. *See e.g.*, *id.* at Chapter 7. One of ordinary skill in the art would have recognized that a combination with Zhurbenko combines known prior art elements according to known methods to yield predictable results. Zhurbenko and the other references identified in Table D use known techniques to improve similar devices or methods in the same way. Moreover, a combination with Zhurbenko was obvious to try because one of skill in the art would have chosen from a finite number of identified, predictable solutions, with a reasonable expectation of success.

l. Motivation for combining with Altera

One of ordinary skill in the art would have been motivated to combine Altera with any of the other references in Table D. Prior to its acquisition by Intel in 2015, the Altera Corporation became an industry leader in the manufacturing and design of programmable logic devices. The Altera Corporation published a "Digital Predistortion Reference Design" ("Altera") that identified the need for power amplifiers in third-generation (3G) wireless communication systems to need "high linearity at the PA output, to achieve high adjacent channel leakage ratio (ACLR) and low error vector magnitude (EVM)." Altera at 1. Altera teaches techniques for achieving a "high efficiency" wireless communication system by utilizing digital predistortion." *Id.*

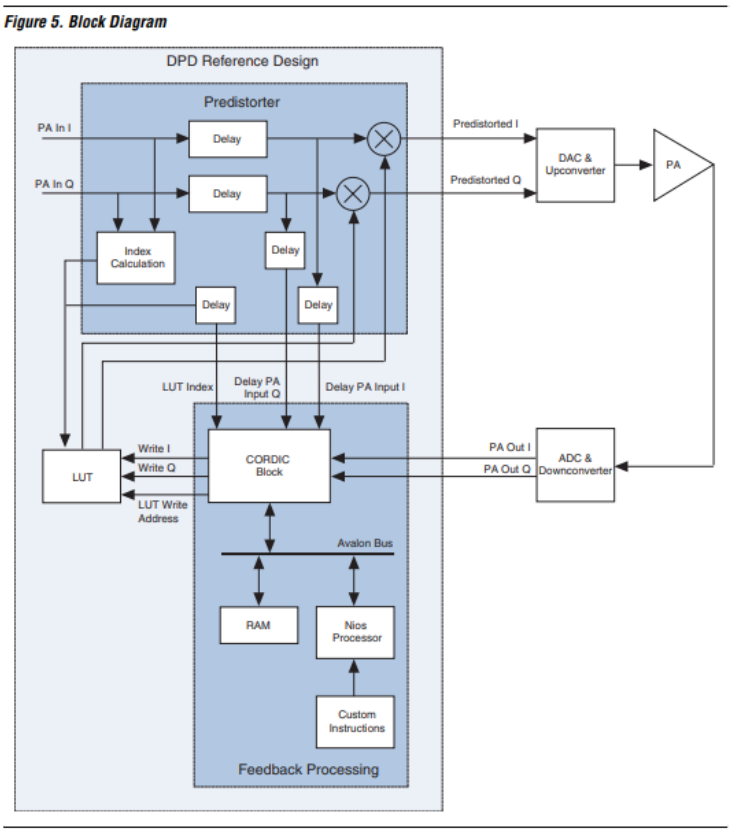

The reference design is an adaptive LUT-based DPD solution.

Altera teaches solutions for improving linearization at the power amplifier by sampling both feedback from the output of the power amplifier and the digital predistortion module to adjust lookup tables associated with the predisotrtion module. *See e.g.*, *id.* at Figure 5. One of ordinary skill in the art would have recognized that a combination with Altera combines known prior art elements according to known methods to yield predictable results. Altera and the other references identified in Table D use known techniques to improve similar devices or methods in the same way. Moreover, a combination with Altera was obvious to try because one of skill in the art would have chosen from a finite number of identified, predictable solutions, with a reasonable expectation of success.

m. Motivation for combining with Barrak

One of ordinary skill in the art would have been motivated to combine Barrak with any of

the other references in Table D. Barrak discloses improved and optimized RF subsampling techniques for improving the linearization of a power amplifier. Barrak at Abstract. Barrak identifies that subsampling the output of DPD and tuning the channel selection utilizing components well known in the art and identified in the Asserted Claims of the Asserted Patent can enhance and improve the efficiency of transmitter circuitry. *See e.g.*, *id.* at Fig.1:

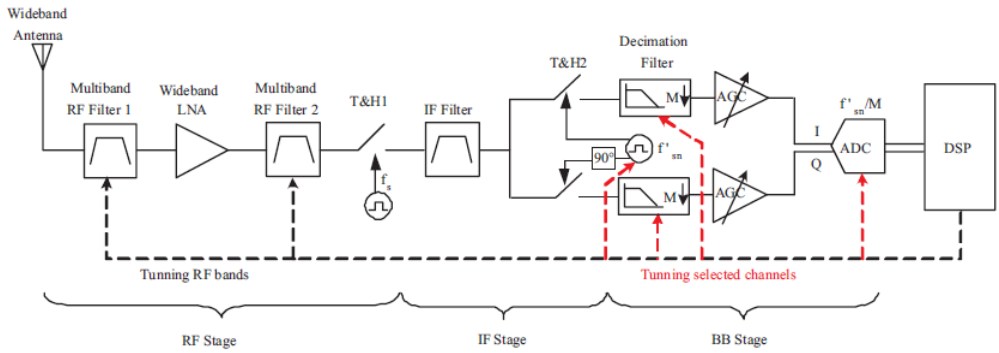

One of ordinary skill in the art would have recognized that a combination with Barrak combines known prior art elements according to known methods to yield predictable results. Barrak and the other references identified in Table D use known techniques to improve similar devices or methods in the same way. Moreover, a combination with Barrak was obvious to try because one of skill in the art would have chosen from a finite number of identified, predictable solutions, with a reasonable expectation of success.

n. Motivation for combining with Jelonnek

One of ordinary skill in the art would have been motivated to combine Jelonnek with any of the other references in Table D. Jelonnek relates to "to a system and a method for digital predistortion of a complex baseband input signal which is fed to a transmitted power amplifier to generate a high-frequency multicarrier transmit signal." Jelonnek at 1:16-19. As shown in Figs. 10 and 12 below, Jelonnek discloses sampling and updating the predistortion module estimation paramaerts and utilizing a feedback circuit to improve the efficiency of a power amplifier by

reducing non-linear circuit effects. *See id*. at 13:22-27, 2:52-58 ("With the aid of the method and system proposed by the inventor, a signal x(k) is digitally predistorted by a non-linear function, which takes into account the memory effects of a transmit power amplifier with the aid of a device for broadband predistortion."); *id*. at 4:5-15 ("The feedback branch features, connected in series, a demodulator DEM1, a broadband receive filter RxF1 and an A/D converter ADC1, which is connected on the output side to the device for broadband parameter estimation PPRE1.").

FIG 10

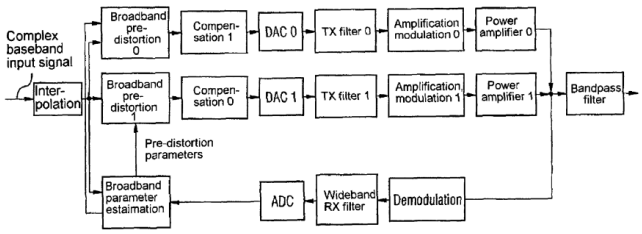

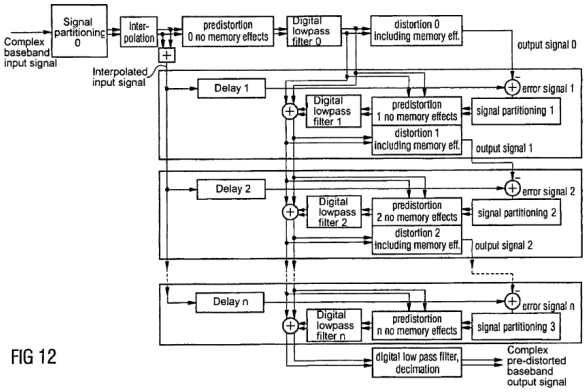

FIG 12

One of ordinary skill in the art would have recognized that a combination with Jelonnek combines known prior art elements according to known methods to yield predictable results. Jelonnek and the other references identified in Table D use known techniques to improve similar devices or methods in the same way. Moreover, a combination with Jelonnek was obvious to try because one of skill in the art would have chosen from a finite number of identified, predictable solutions, with a reasonable expectation of success.

o. Motivation for combining with Fang

One of ordinary skill in the art would have been motivated to combine Fang with any of the other references in Table D. Fang discloses a "pre-distortion signal generating module, a pre-distortion signal processing module, a feedback module and a parameter identification module, wherein an input signal of a radio-frequency power amplifier is acquired after a pre-distortion

signal is processed by the pre-distortion signal processing module; after a small part of power in an output signal of the radio-frequency power amplifier is weakened, the output signal enters the feedback module; an input signal of the parameter identification module is acquired after a feedback signal is processed by the feedback module; an output signal of the parameter identification module is compared with the pre-distortion signal through the parameter identification module so as to acquire an error signal; and the error signal is gradually reduced and returns to zero by adjusting the parameters of the identification module and a pre-distorter." Fang at Abstract; *see id.* at Figs. 1 and 2:[14]

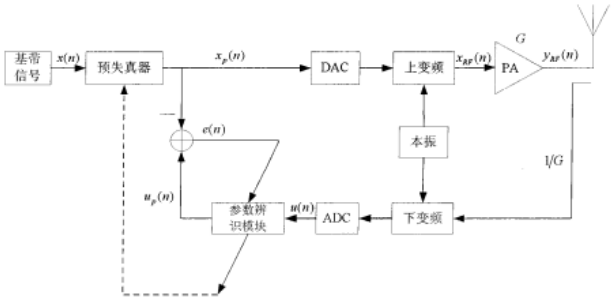

图 1

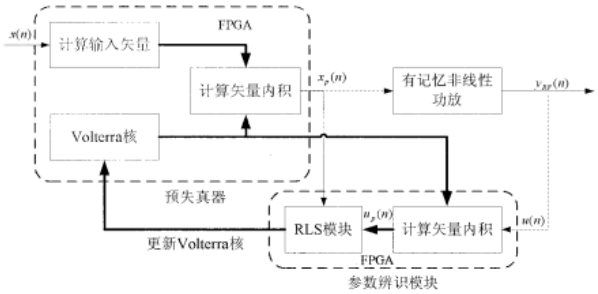

图 2

One of ordinary skill in the art would have recognized that a combination with Fang combines known prior art elements according to known methods to yield predictable results. Fang

[14] Defendants' Invalidity Contentions regarding Fang are based on a machine-generated translation of CN201878098 obtained through Espacenet. Defendants reserve the right to amend these contentions upon obtaining a certified translation.

and the other references identified in Table D use known techniques to improve similar devices or methods in the same way. Moreover, a combination with Fang was obvious to try because one of skill in the art would have chosen from a finite number of identified, predictable solutions, with a reasonable expectation of success.

p. Motivation for combining with Ahmed

One of ordinary skill in the art would have been motivated to combine Ahmed with any of the other references in Table D. Ahmed relates to an "apparatus and method for characterizing an amplifier transmitting a band limited signal using a sample of the input signal to the amplifier and a sample of the output signal from the amplifier, where the output signal is sub-sampled." Ahmed at Abstract. Ahmed teaches that the subsampling allows for the "results of the analysis may be used to construct or modify the parameters of algorithms in either the transmitter circuitry, or in a device disposed (not shown) between the transmitter circuitry 10 and the PA input so as to pre-distort the signal applied to the input of the PA to reduce or substantially eliminate the measured distortion" and that the "parametric aspects of the pre-distortion circuitry may be adjusted periodically based on the measured results, as it may be expected that the distortion characteristics of the PA may vary with temperature, transmitted signal bandwidth and amplitude and the like." *Id*. at [0036]; Fig. 2:

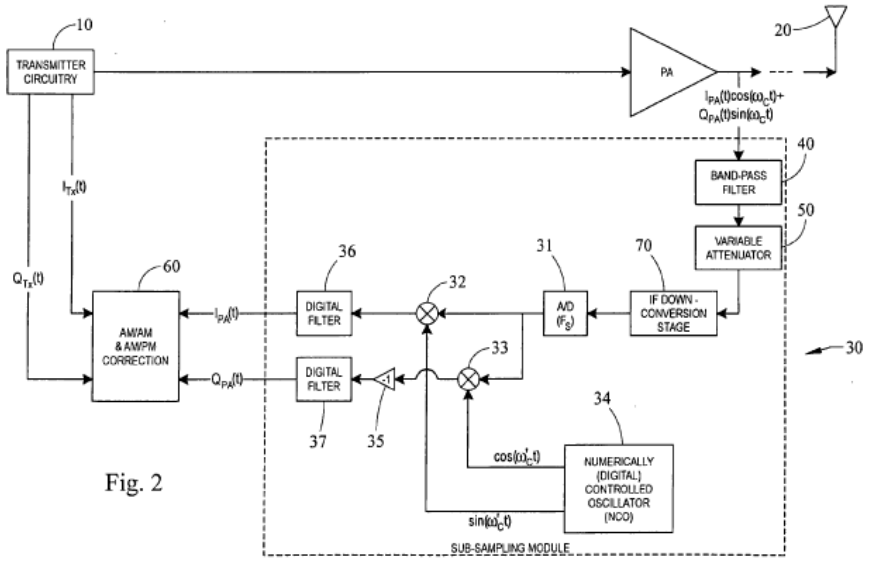

Fig. 2

One of ordinary skill in the art would have recognized that a combination with Ahmed combines known prior art elements according to known methods to yield predictable results. Ahmed and the other references identified in Table D use known techniques to improve similar devices or methods in the same way. Moreover, a combination with Ahmed was obvious to try because one of skill in the art would have chosen from a finite number of identified, predictable solutions, with a reasonable expectation of success.

q. Motivation for combining with McCallister

One of ordinary skill in the art would have been motivated to combine McCallister with any of the other references in Table D. McCallister discloses, "a digital communications transmitter that includes "a digital linear and nonlinear predistortion section (200, 1800) to compensate for linear and nonlinear distortion introduced by transmitter-analog components." McCallister at Abstract. For example, McCallister explains that the reduction of linear distortion becomes more desirable as a communications signal becomes more wideband; however, conventional receivers failed to address this issue. *Id*. at [0022]–[0023]. McCallister then discloses an improved predistortion circuit and method for compensating for linear and nonlinear

distortions, as well as distortion introduced in feedback signals, and through heat-induced memory effects. *Id*. at [0024]–[0028]. McCallister explains that "the benefits of the present invention are best appreciated with forms of modulation where both amplitude and phase are used to digitally convey the information," such as "quadrature-amplitude modulation (QAM), code-division-multiple-access (CDMA), orthogonal-frequency-division modulation (OFDM), multiple-input, multiple-output systems, and the like." *Id*. at [0058]; Fig. 19.

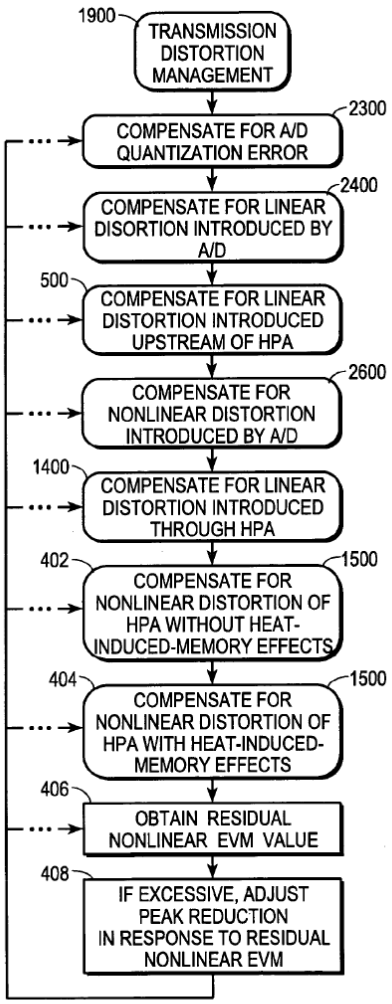

FIG. 19

One of ordinary skill in the art would recognize, in view of McCallister's teachings concerning digital predistortion involving linear and nonlinear components, that predistortion in MIMO RF transmitters could be improved by employing the techniques of McCallister to compensate for linear and nonlinear distortion introduced through A/D conversion, power amplifiers, and heat-induced memory effects. One of ordinary skill in the art would have recognized that a combination with McCallister combines prior art elements according to known methods to yield predictable results. McCallister and the other references use known techniques to improve similar devices or methods in the same way. Moreover, a combination with McCallister was obvious to try because one of skill in the art would have chosen from a finite number of identified, predictable solutions, with a reasonable expectation of success.

r. Motivation for combining with Eidson

One of ordinary skill in the art would have been motivated to combine Eidson with any of

the other references in Table D. Eidson teaches "A system for pre-distorting samples derived from modulated data symbols to compensate, at least in part, for non-linear operation of a power amplifier in a power-constrained remote relay station." Eidson at Abstract. As shown in Fig. 7C below, Eidson discloses a "a system according to the invention for pre-distorting samples derived from modulation symbols to account for distortion introduced by a power-constrained remote relay station" in which "incoming samples are pre-distorted, upconverted to RF frequencies, and then transmitted" and providing "for dynamically updating the pre-distortion applied by the first system responsive to any residual distortion still present in the transmitted signal." Eidson at [0044], [0056], Fig. 7C.

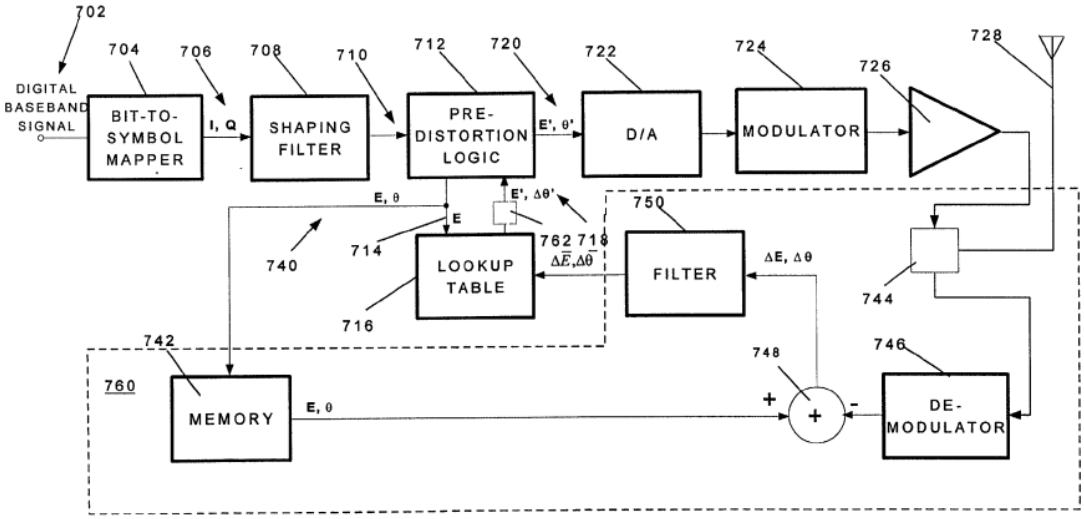

Figure 7C

Consistent with the alleged novelty of the '296 Patent, Eidson proposes a linearization technique to improve the efficiency of wireless transmitters by sampling the predistortion module and compensating for the dynamic (memory effect) associated with the wireless transmitter by updating the coefficients in the predistortion module. *Id.* One of ordinary skill in the art would have recognized that a combination with Eidson combines known prior art elements according to known methods to yield predictable results. Eidson and the other references identified in Table D

use known techniques to improve similar devices or methods in the same way. Moreover, a combination with Eidson was obvious to try because one of skill in the art would have chosen from a finite number of identified, predictable solutions, with a reasonable expectation of success.

s. Motivation for combining with Obernosterer

One of ordinary skill in the art would have been motivated to combine Obernosterer with any of the other references in Table D. As depicted in Fig. 1 (reproduced below), Obernosterer teaches "A power amplifier predistortion method involves generating a reverse model of a power amplifier block. The reverse model is based on modeled output signal values of the power amplifier block and sampled output signal values of the power amplifier block." Obernosterer at Abstract. Obernosterer discloses "[i] n an exemplary embodiment of the present invention, a power amplifier predistortion system may include a predistorter that distorts input signal values to produce output signal values at a first sample rate. The system may also include a power amplifier block having an amplification chain that amplifies the output signal values of the predistorter to produce an amplified signal, and a feedback receiver that samples the amplified signal at a second sample rate to produce sampled output signal values. A forward modeler models the power amplifier block in a forward direction to produce modeled output signal values. A parameter estimator updates parameters of the predistorter based on the sampled output signal values from the feedback receiver and the modeled output signal values from the forward modeler." Obernosterer at [0009].

Fig. 1

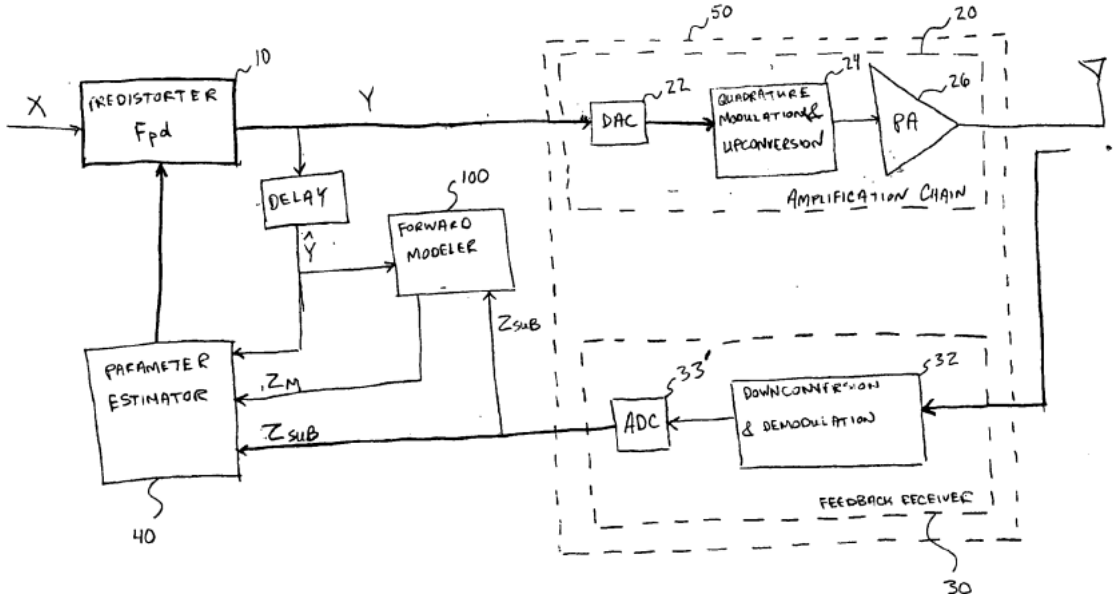

Consistent with the alleged novelty of the ’296 Patent, Obernosterer proposes a linearization technique to improve the efficiency of wireless transmitters by sampling the predistortion module and compensating for the dynamic (memory effect) associated with the wireless transmitter by updating the coefficients in the predistortion module. *Id.* One of ordinary skill in the art would have recognized that a combination with Obernosterer combines known prior art elements according to known methods to yield predictable results. Obernosterer and the other references identified in Table D use known techniques to improve similar devices or methods in the same way. Moreover, a combination with Obernosterer was obvious to try because one of skill in the art would have chosen from a finite number of identified, predictable solutions, with a reasonable expectation of success.

t. Motivation for combining with Jeckeln ’345

One of ordinary skill in the art would have been motivated to combine Jeckeln ’345 with any of the other references in Table D. Jeckeln ’345 discloses an “advanced adaptive baseband/RF predistorting device, which advantageously uses the concept of digital receiver technology into

power amplifier (PA) linearization area." Jeckeln '345 at Abstract. As depicted in Fig. 1, Jeckeln '345 teaches a "predistorting device 20 has two inputs 22 and 24 and an output 26. The first input 22 is connected to the low level RF output 28 of a low level RF signal source 30 to thereby receive an input RF signal therefrom; and the second input 24 is connected to the RF output 32 of a PA 34. The RF output 32 delivering an amplified output RF signal. The output 26, on the other hand, is connected to the input 36 of the PA 34." Jeckeln '345 at 5:17-65.

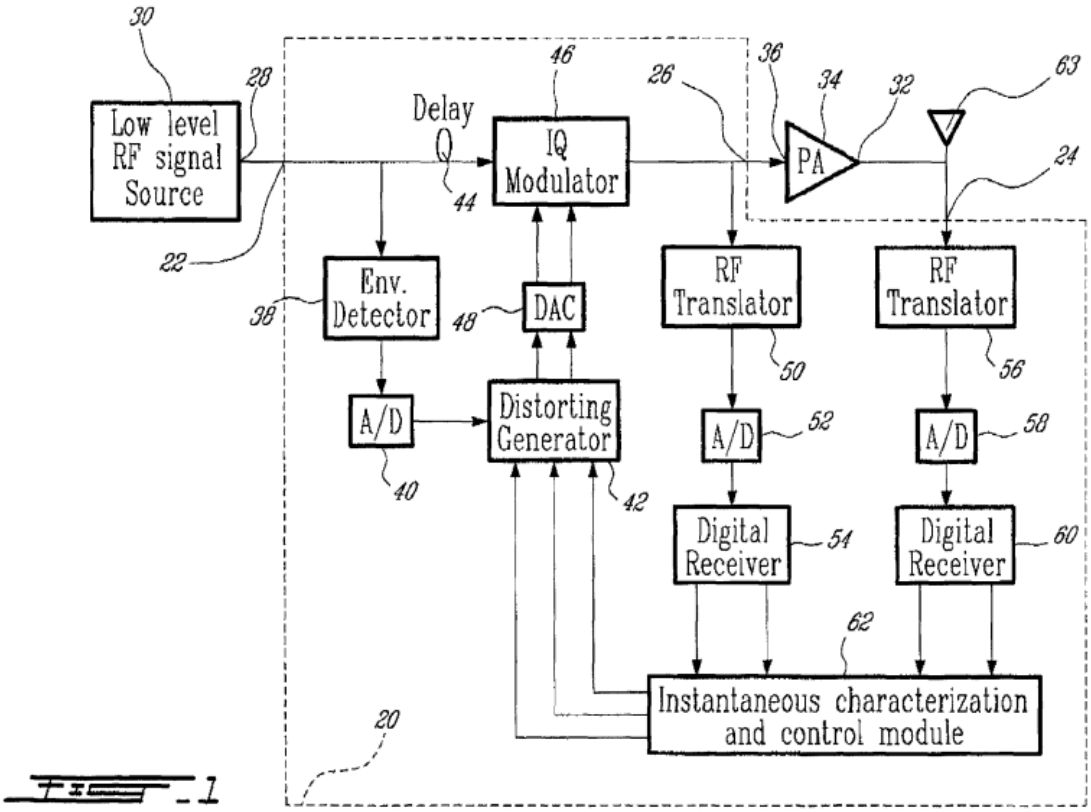

FIG. 1

One of ordinary skill in the art would have recognized that a combination with Jeckeln '345 combines known prior art elements according to known methods to yield predictable results. Jeckeln '345 and the other references identified in Table D use known techniques to improve similar devices or methods in the same way. Moreover, a combination with Jeckeln '345 was obvious to try because one of skill in the art would have chosen from a finite number of identified, predictable solutions, with a reasonable expectation of success.

u. Motivation for combining with Zhu

One of ordinary skill in the art would have been motivated to combine Zhu with any of the other references in Table D. As depicted in Figs. 5 and 6, Zhu discloses a predistortion linear transmitter that updates a model according to sampling from the output of the digital predistorter. *See e.g.*, Zhu at Figs. 5 and 6:

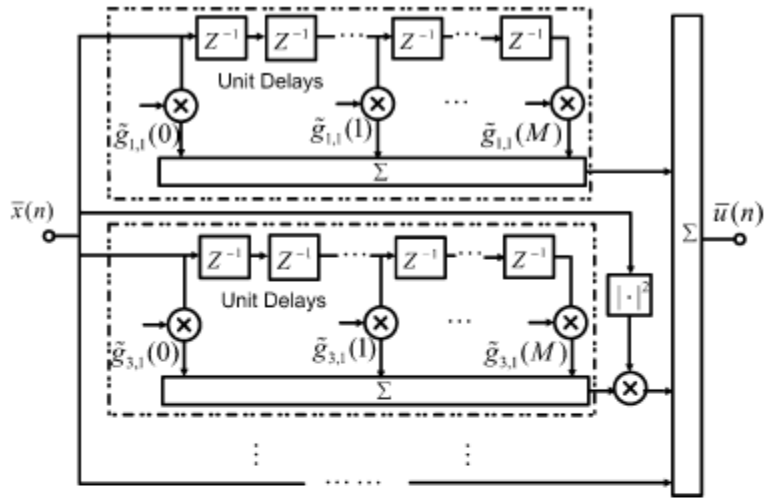

Fig. 5. Sample of DPD implementation.

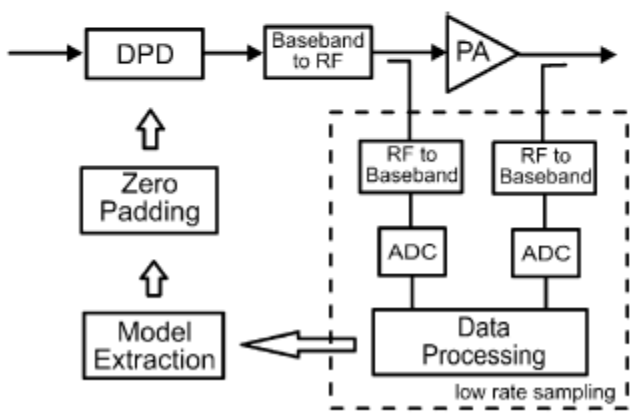

Fig. 6. Block diagram of digital predistortion characterization.

One of ordinary skill in the art would have recognized that a combination with Zhu combines known prior art elements according to known methods to yield predictable results. Zhu and the other references identified in Table D use known techniques to improve similar devices or

methods in the same way. Moreover, a combination with Zhu was obvious to try because one of skill in the art would have chosen from a finite number of identified, predictable solutions, with a reasonable expectation of success.

v. Motivation for combining with Choi

One of ordinary skill in the art would have been motivated to combine Choi with any of the other references in Table D. Choi discloses "A new digital predistortion (DPD) technique for multi-band signals is proposed. The transmitter considered in this paper has multi-band signals, and those signals are combined and amplified by a single wideband power amplifier (PA). In this case, the PA output is distorted by the nonlinear crossproducts between different-band signals as well as their own nonlinear self-products. To linearize the PA and remove those nonlinear products, we propose a PD structure, which has multiple predistorters (one predistorter (PD) for one band). Each PD removes the nonlinear cross-products and self-products to mitigate the spectral regrowth for the corresponding band. Since the PD parameters for different bands are linked together, it is difficult to find the PD parameters separately. As an alternative method, we propose an iterative method for finding the PD parameters. The simulation results show that the iterative method converges well, and the proposed PD can effectively linearize the PA and remove spectral regrowth at each signal band." Choi at Abstract. *See* Choi at Fig. 3:

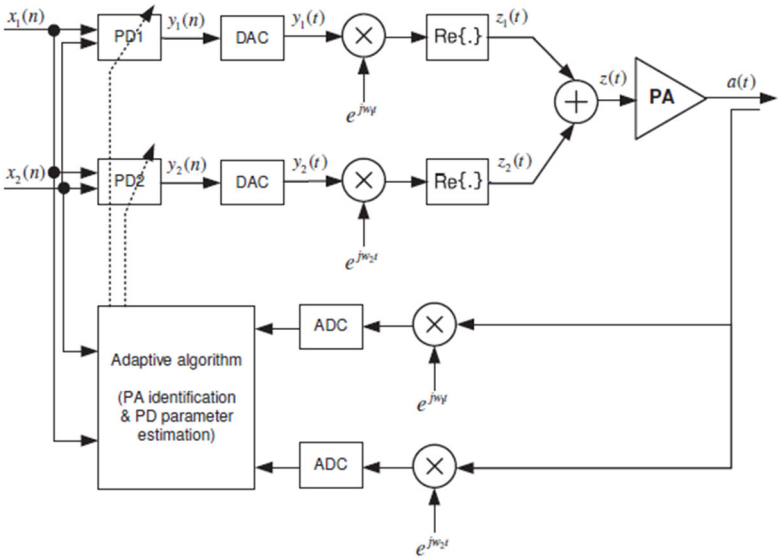

Fig. 3. Proposed PD structure.

One of ordinary skill in the art would have recognized that a combination with Choi combines known prior art elements according to known methods to yield predictable results. Choi and the other references identified in Table D use known techniques to improve similar devices or methods in the same way. Moreover, a combination with Choi was obvious to try because one of skill in the art would have chosen from a finite number of identified, predictable solutions, with a reasonable expectation of success.

w. Motivation for combining with Bassam ’857

One of ordinary skill in the art would have been motivated to combine Bassam ’857 with any of the other references in Table D. Bassam ’857 discloses an “a system 1000 comprising a digital multi-cell processing pre-compensator 1020 with dual inputs 1010 and dual pre-distorted outputs 1015 cascaded in front of a dual-band transmitter 1030 similar to the one illustrated in FIG. 8 (with components 1035A, 1035B, 1040A, 1040B, 1045A, 1045B, 1050 and 1060 of FIG. 10 corresponding to components 830A, 830B, 840A, 840B, 835A, 835B, 845 and 850 of FIG. 8). The digital multi-cell pre-compensator 1020 uses a matrix of two processing cells, 1025A and

1025B, in order to compensate for the dual-band transmitter's nonlinearities and any intra-band distortions (impairments) between the two RF signals. The digital multi-cell pre-compensator 1020 with dual inputs 1010 and dual outputs 1015 comprises means, for example the processing cells 1025A and 1025B, using the input signals 1010 and output signal 1070 of the dual-band transmitter 1030 to estimate any nonlinearities and distortions (impairments) and identify a proper processing function for each of the two processing cells PC1 1025A and PC2 1025B. After identification, the input signals 1010 are supplied to the two processing cells 1025A and 1025B to generate and adjust the pre-distorted signals 1015. Then the pre-distorted signals 1015 are supplied to the dual-band transmitter 1030. The cascade of the digital compensator 1020 and the dual-band transmitter 1030 exhibits linear behavior." Bassam '857 at 6:15-39. *See* Bassam '857 at Figs. 10-11.

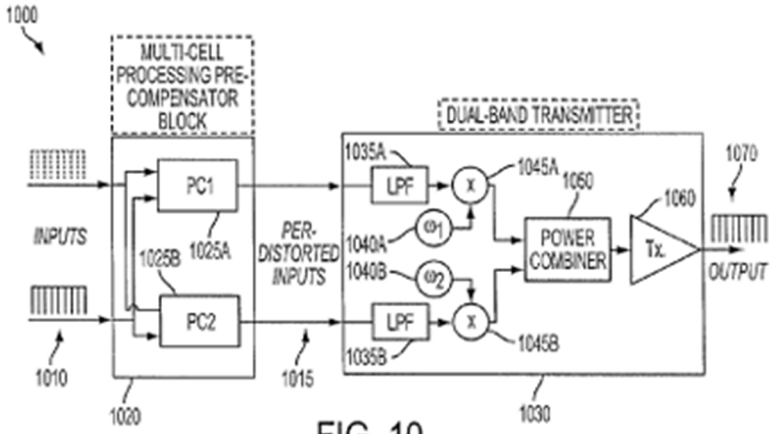

FIG. 10

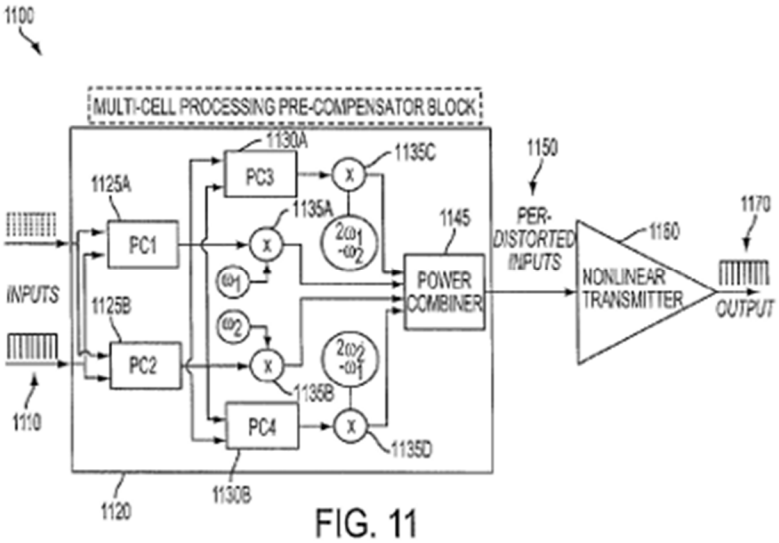

FIG. 11

One of ordinary skill in the art would have recognized that a combination with Bassam ’857 combines known prior art elements according to known methods to yield predictable results. Bassam ’857 and the other references identified in Table D use known techniques to improve similar devices or methods in the same way. Moreover, a combination with Bassam ’857 was obvious to try because one of skill in the art would have chosen from a finite number of identified, predictable solutions, with a reasonable expectation of success.

x. Motivation for combining with Xin

One of ordinary skill in the art would have been motivated to combine Xin with any of the other references in Table D. Xin teaches the “principle structure of a digital predistortion system used e.g. in a transmitter for signal transmission is shown in fig. 1.” Xin at [0011]. Xin discloses a “predistorter PD has a first input for receiving input signals and is connected via an output both to an input of a power amplifier PA and to a first input of an predistorter learning device PLD. The power amplifier PA has an output for signal transmission to further devices not depicted in fig. 1 and is connected via said output to a normalization device ND.” Xin at [0011]-[0013]. *See* Xin at Fig. 1:

Fig. 1

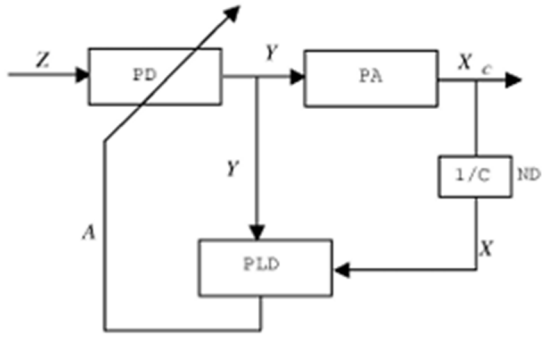

Xin further discloses that the "predistorter learning device PLD uses both the normalized signals X and the predistorted signals Y , i.e. the output and input signals of the power amplifier PA to calculate the inverse characteristic of the power amplifier PA and thus predistortion parameters A. Said predistortion parameters A are sent to the predistorter PD and applied in the predistorter for predistortion of signals Z before the signals are sent to the power amplifier PA in order to compensate the nonlinearities of the power amplifier PA." Xin at [0019].

Consistent with the alleged novelty of the '204 Patent, Xin proposes a linearization technique to improve the efficiency of wireless transmitters by sampling the predistortion module and compensating for the dynamic (memory effect) associated with the wireless transmitter by updating the coefficients in the predistortion module. *Id*. One of ordinary skill in the art would have recognized that a combination with Xin combines known prior art elements according to known methods to yield predictable results. Xin and the other references identified in Table D use known techniques to improve similar devices or methods in the same way. Moreover, a combination with Xin was obvious to try because one of skill in the art would have chosen from a finite number of identified, predictable solutions, with a reasonable expectation of success.

y. Motivation for combining with Jelonnek '375

One of ordinary skill in the art would have been motivated to combine Jelonnek '375 with

any of the other references in Table D. Jelonnek '375 teaches "A power amplifier module (300) is provided, which comprises a power supply unit (304) having an input connector and an output connector, and a power amplifier (303) having an input terminal, wherein the output connector of the power supplying unit (304) is connected to the input terminal of the power amplifier (303), wherein the power supply unit (304) is adapted to generate a variable drain voltage from an undefined stabilized voltage applied to the input connector and supply the variable drain voltage to the output connector." Jelonnek '375 at Abstract. As shown in Fig. 1, A complex digital baseband input signal BBIS arrives via an interpolation device 101 as a signal x(k) both at a device for broadband predistortion 102 of a main branch as also at a device for broadband parameter estimation 103. The device for broadband predistortion 102 is a series circuit with a compensator device 104 or equalizer to compensate for linear distortions, with a D/A converter 105, with a transmit filter TxF 106 causing linear distortions, with a modulator 107 and with the transmit power amplifier 108 connected downstream." Jelonnek '375 at [0030]-[0031].

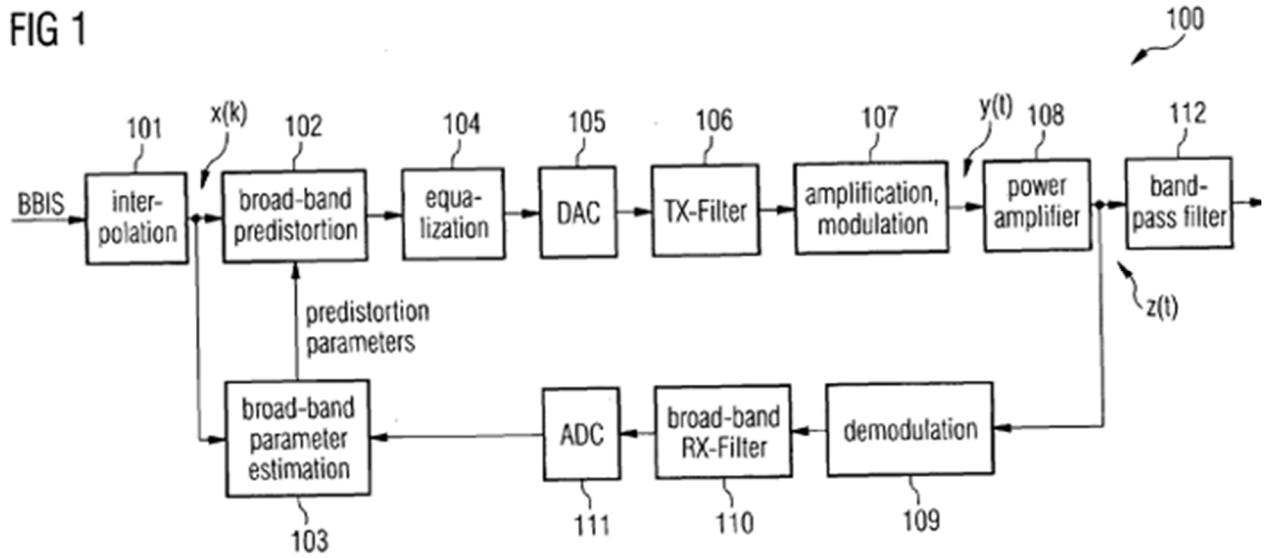

Jelonnek '375 at Fig. 1.

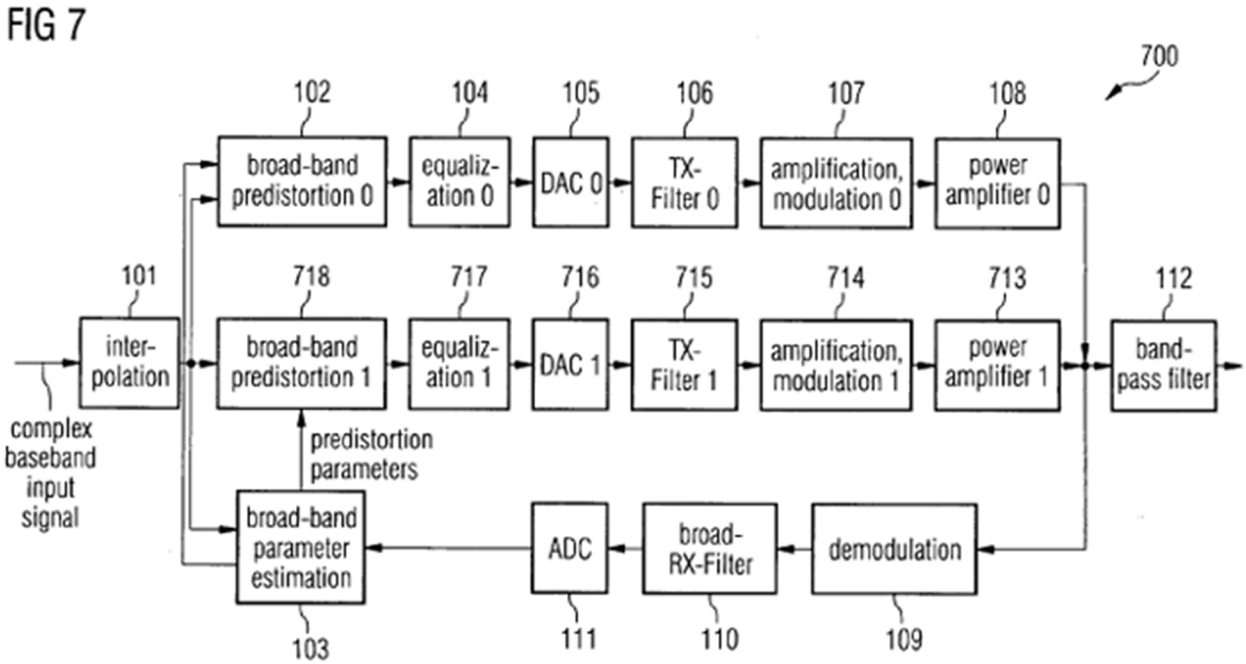

Jelonnek ’375 at Fig. 7.

Consistent with the alleged novelty of the ’204 Patent, Jelonnek ’375 proposes a linearization technique to improve the efficiency of wireless transmitters by sampling the predistortion module and compensating for the dynamic (memory effect) associated with the wireless transmitter by updating the coefficients in the predistortion module. *Id.* One of ordinary skill in the art would have recognized that a combination with Jelonnek ’375 combines known prior art elements according to known methods to yield predictable results. Jelonnek ’375 and the other references identified in Table D use known techniques to improve similar devices or methods in the same way. Moreover, a combination with Jelonnek ’375 was obvious to try because one of skill in the art would have chosen from a finite number of identified, predictable solutions, with a reasonable expectation of success.

z. Motivation for combining with Kilambi

One of ordinary skill in the art would have been motivated to combine Kilambi with any of the other references in Table D. Kilambi relates to a “multi-band signal is generated by

combining two or more input signals separated in frequency. The input signals are combined either before or after predistortion depending on the bandwidth of the multi-band signal. If the bandwidth of the multi-band signal is less than a predetermined bandwidth threshold, the input signals are combined and predistortion is applied to the combined signal to generate the multi-band signal. If the bandwidth of the multi-band signal is greater than the bandwidth threshold, the individual input signals are predistorted and subsequently combined to generate the multi-band signal." Kilambi at Abstract. Kilabmi's linearized dual-band transmitter is illustrated below:

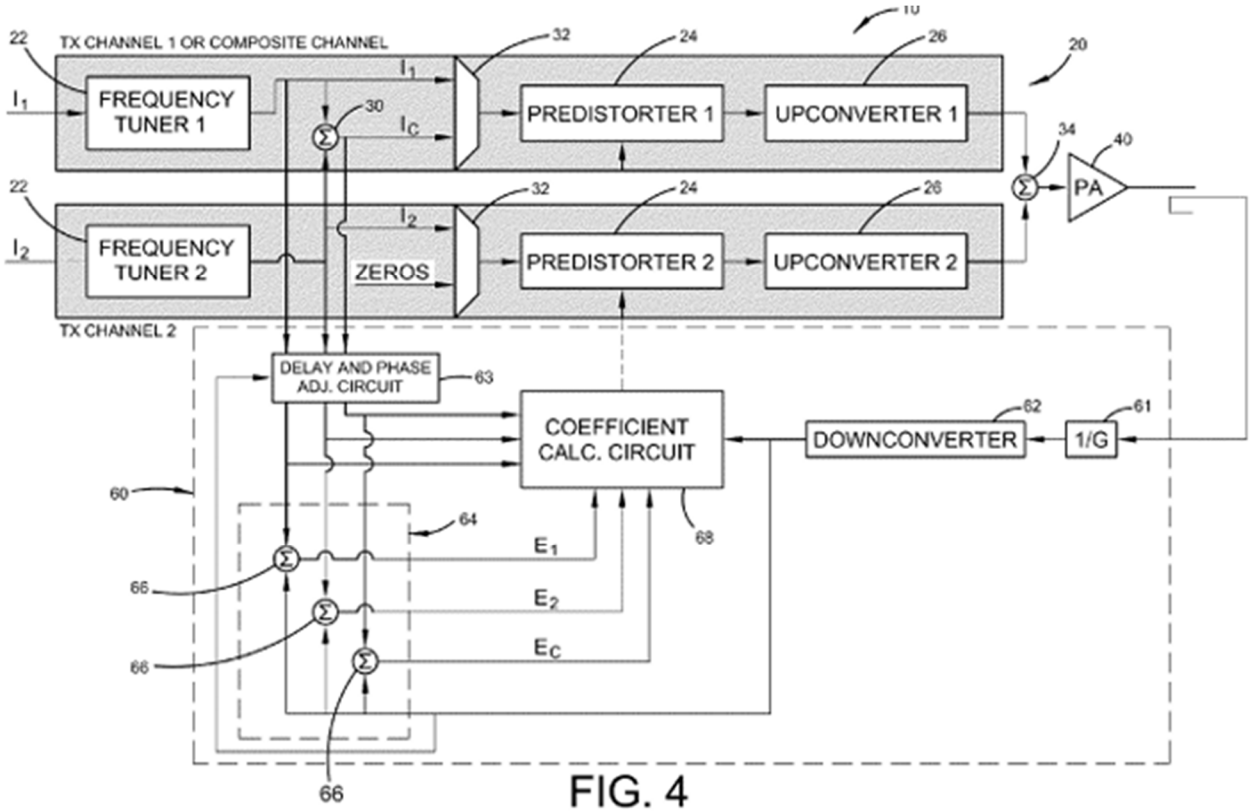

FIG. 4

Kilambi at Fig. 4.

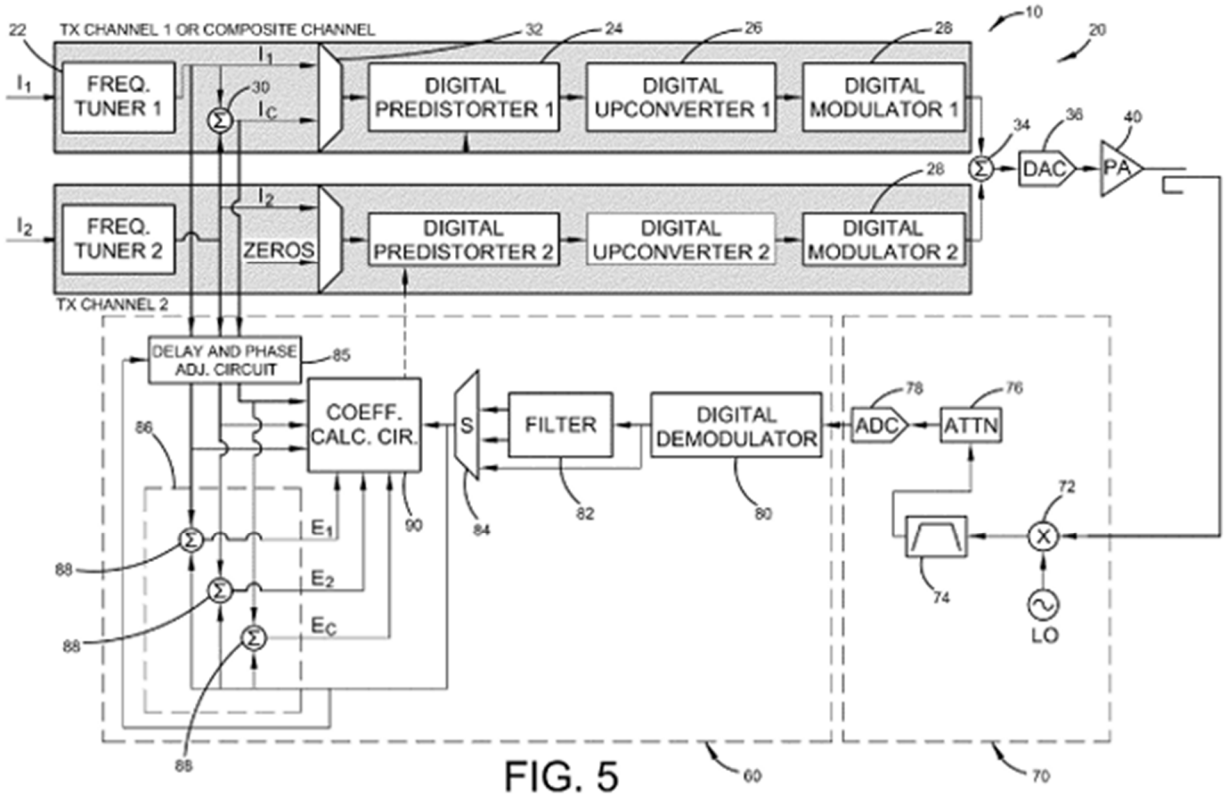

FIG. 5

Kilambi at Fig. 5.

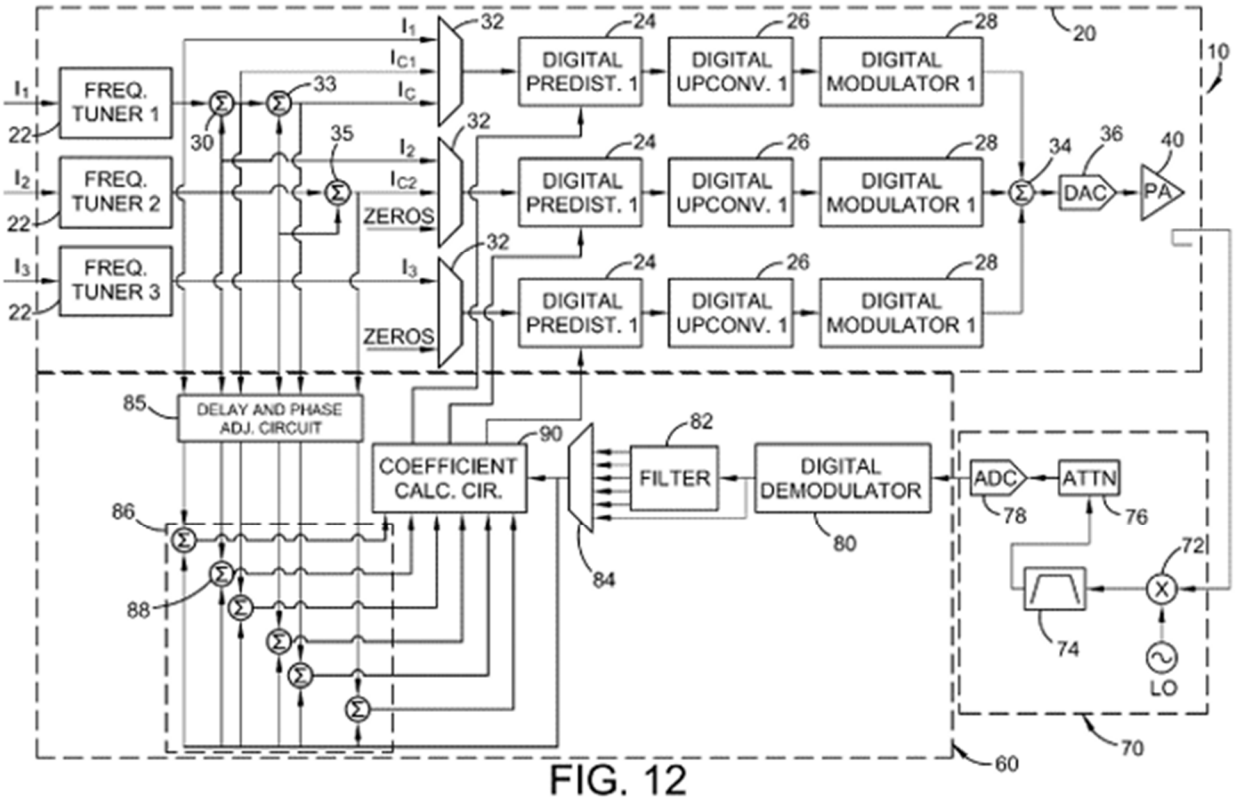

FIG. 12

Kilambi at Fig. 12.

One of ordinary skill in the art would have recognized that a combination with Kilambi combines known prior art elements according to known methods to yield predictable results. Kilambi and the other references identified in Table D use known techniques to improve similar devices or methods in the same way. Moreover, a combination with Kilambi was obvious to try because one of skill in the art would have chosen from a finite number of identified, predictable solutions, with a reasonable expectation of success.

aa. Motivation for combining with Posti

One of ordinary skill in the art would have been motivated to combine Posti with any of the other references in Table D. Posti relates to a "multi frequency carrier transmitter comprises input means for receiving a plurality of different digital signals to be transmitted. The different signals are to be transmitted on different carrier frequencies. Amplifier means receive a composite

signal comprising the different signals at the respective carrier frequencies and amplify the composite signal. Predistortion means predistort the plurality of digital signals prior to amplification of the composite signal by the amplification means. The predistortion provided by the predistortion means is subsequently altered in dependence on the difference between the input signals and the output at the amplifier means." Posti at Abstract. As depicted in Fig. 4, Posti discloses a base station comprising "N channel encoders 104 where N is the number of different frequencies on which the base station 100 will transmit signals." Posti at 4:35-46.

Fig.4.

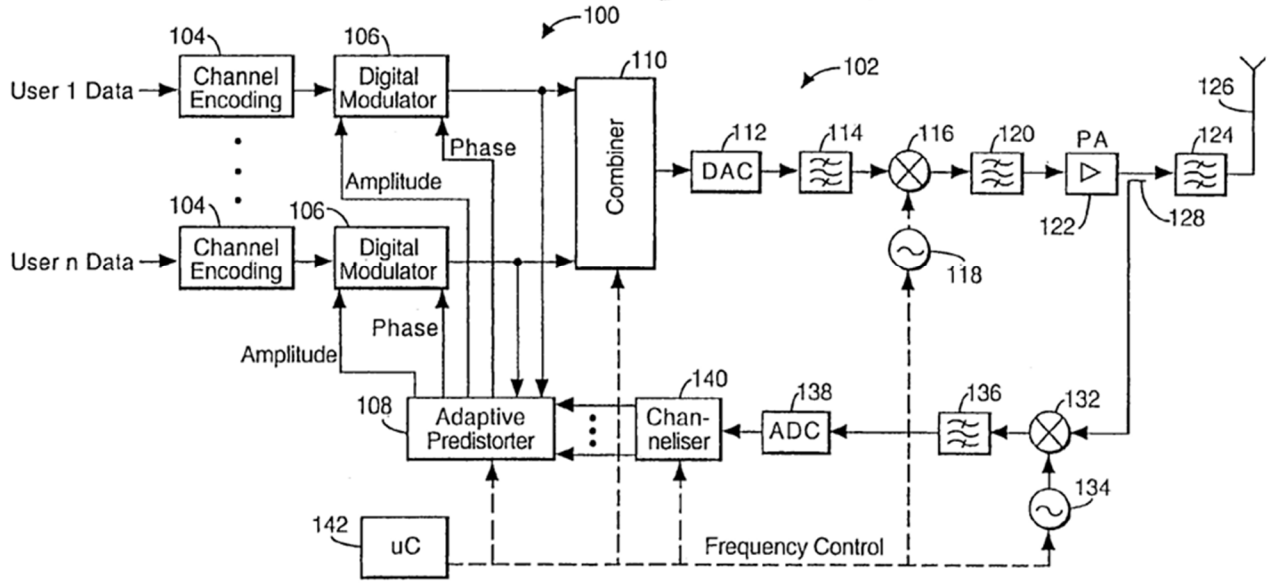

Posti at Fig. 4.

One of ordinary skill in the art would have recognized that a combination with Posti combines known prior art elements according to known methods to yield predictable results. Posti and the other references identified in Table D use known techniques to improve similar devices or methods in the same way. Moreover, a combination with Posti was obvious to try because one of skill in the art would have chosen from a finite number of identified, predictable solutions, with a reasonable expectation of success.

5. The ’296 Patent

The primary references identified above, as further described in the Exhibits, each disclose, either expressly or inherently, every element of the Asserted Claims, thereby anticipating those claims. Additionally, each of the primary references alone (including in combination with the knowledge of a person of ordinary skill in the art) renders obvious the Asserted Claims. To the extent Plaintiff contends that any primary reference does not anticipate or render obvious the Asserted Claims as set forth above, it would have been obvious to combine or modify the primary references with concepts from other prior art, as explained throughout these Invalidity Contentions. In particular, for each limitation of the Asserted Claims that Plaintiff contends is not met by a particular primary reference, Defendants contend that the limitation (and claim as a whole) is obvious based on a combination of that particular primary reference with (1) any other primary reference disclosing that limitation, (2) any reference identified and/or relied on in the primary references as disclosing that limitation, (3) any statements made in the intrinsic record of the Asserted Patent, and/or (4) the knowledge of one of ordinary skill in the art (as explained in additional detail below).

It would have been obvious to try combining the prior art references identified above because there were only a finite number of predictable solutions and/or because known work in one field or endeavor prompted variations based on predictable design incentives and/or market forces either in the same field or a different one. Each of the references identified in these Invalidity Contentions are directed to the same field of endeavor (*e.g.*, “multiple branch digital predistortion linearization architecture and digital signal processing algorithms for impairment-free operation and linearized multi-band transmitter.”). ’296 Patent at 3:47-50. The solutions identified in the prior art utilize the same components and techniques that are identified in the ’296 Patent. Thus, as set forth in the aforementioned claim charts, a person of ordinary skill in the art

would be motivated to look for solutions in other references in that field or that solve the same alleged problems.

Relatedly, one of ordinary skill in the art would have been motivated to create combinations identified in these contentions using: known methods to yield predictable results; known techniques in the same way; a simple substitution of one known, equivalent element for another to obtain predictable results; and/or teaching, suggestion, or motivation in the prior art generally. Also, market forces in the industry, and the desire to improve features and performance, would motivate the addition of features to systems as they become available, become smaller, become less expensive, become more commonly used, provide better performance, reduce costs, or predictably achieve other clearly desirable results.

The following includes examples of combinations that one of ordinary skill in the art would have found obvious, in particular with respect to Asserted Claims of the ’296 Patent:

- Woo, alone or in combination with Ceylan, Gupta, Cidronali, Wang, Maltsev, Peroulas, Hongo, Kim, Bassam, Zhurbenko, Altera, Barrak, Jelonnek, Fang, McCallister, Eidson, Obernosterer, Jeckeln ’345, Zhu, Choi, Bassam ’857, Xin, Jelonnek ’375, Kilambi, Posti, and/or Ahmed, render obvious the Asserted Claims of the ’296 Patent.
- Ceylan, alone or in combination with Woo, Gupta, Cidronali, Wang, Maltsev, Peroulas, Hongo, Kim, Bassam, Zhurbenko, Altera, Barrak, Jelonnek, Fang, McCallister, Eidson, Obernosterer, Jeckeln ’345, Zhu, Choi, Bassam ’857, Xin, Jelonnek ’375, Kilambi, Posti, and/or Ahmed, render obvious the Asserted Claims of the ’296 Patent.
- Gupta, alone or in combination with Ceylan, Woo, Cidronali, Wang, Maltsev,

Peroulas, Hongo, Kim, Bassam, Zhurbenko, Altera, Barrak, Jelonnek, Fang, McCallister, Eidson, Obernosterer, Jeckeln ’345, Zhu, Choi, Bassam ’857, Xin, Jelonnek ’375, Kilambi, Posti, and/or Ahmed, render obvious the Asserted Claims of the ’296 Patent.

- Cidronali, alone or in combination with Ceylan, Gupta, Woo, Wang, Maltsev, Peroulas, Hongo, Kim, Bassam, Zhurbenko, Altera, Barrak, Jelonnek, Fang, McCallister, Eidson, Obernosterer, Jeckeln ’345, Zhu, Choi, Bassam ’857, Xin, Jelonnek ’375, Kilambi, Posti, and/or Ahmed, render obvious the Asserted Claims of the ’296 Patent.
- Wang, alone or in combination with Ceylan, Gupta, Cidronali, Woo, Maltsev, Peroulas, Hongo, Kim, Bassam, Zhurbenko, Altera, Barrak, Jelonnek, Fang, McCallister, Eidson, Obernosterer, Jeckeln ’345, Zhu, Choi, Bassam ’857, Xin, Jelonnek ’375, Kilambi, Posti, and/or Ahmed, render obvious the Asserted Claims of the ’296 Patent.
- Maltsev, alone or in combination with Ceylan, Gupta, Cidronali, Wang, Woo, Peroulas, Hongo, Kim, Bassam, Zhurbenko, Altera, Barrak, Jelonnek, Fang, McCallister, Eidson, Obernosterer, Jeckeln ’345, Zhu, Choi, Bassam ’857, Xin, Jelonnek ’375, Kilambi, Posti, and/or Ahmed, render obvious the Asserted Claims of the ’296 Patent.
- Peroulas, alone or in combination with Ceylan, Gupta, Cidronali, Wang, Maltsev, Woo, Hongo, Kim, Bassam, Zhurbenko, Altera, Barrak, Jelonnek, Fang, McCallister, Eidson, Obernosterer, Jeckeln ’345, Zhu, Choi, Bassam ’857, Xin, Jelonnek ’375, Kilambi, Posti, and/or Ahmed, render obvious the Asserted Claims

of the ’296 Patent.

- Hongo, alone or in combination with Ceylan, Gupta, Cidronali, Wang, Maltsev, Peroulas, Woo, Kim, Bassam, Zhurbenko, Altera, Barrak, Jelonnek, Fang, McCallister, Eidson, Obernosterer, Jeckeln ’345, Zhu, Choi, Bassam ’857, Xin, Jelonnek ’375, Kilambi, Posti, and/or Ahmed, render obvious the Asserted Claims of the ’296 Patent.
- Kim, alone or in combination with Ceylan, Gupta, Cidronali, Wang, Maltsev, Peroulas, Hongo, Woo, Bassam, Zhurbenko, Altera, Barrak, Jelonnek, Fang, McCallister, Eidson, Obernosterer, Jeckeln ’345, Zhu, Choi, Bassam ’857, Xin, Jelonnek ’375, Kilambi, Posti, and/or Ahmed, render obvious the Asserted Claims of the ’296 Patent.
- Bassam, alone or in combination with Ceylan, Gupta, Cidronali, Wang, Maltsev, Peroulas, Hongo, Kim, Woo, Zhurbenko, Altera, Barrak, Jelonnek, Fang, McCallister, Eidson, Obernosterer, Jeckeln ’345, Zhu, Choi, Bassam ’857, Xin, Jelonnek ’375, Kilambi, Posti, and/or Ahmed, render obvious the Asserted Claims of the ’296 Patent.
- Zhurbenko, alone or in combination with Ceylan, Gupta, Cidronali, Wang, Maltsev, Peroulas, Hongo, Kim, Bassam, Woo, Altera, Barrak, Jelonnek, Fang, McCallister, Eidson, Obernosterer, Jeckeln ’345, Zhu, Choi, Bassam ’857, Xin, Jelonnek ’375, Kilambi, Posti, and/or Ahmed, render obvious the Asserted Claims of the ’296 Patent.
- Altera, alone or in combination with Ceylan, Gupta, Cidronali, Wang, Maltsev, Peroulas, Hongo, Kim, Bassam, Zhurbenko, Woo, Barrak, Jelonnek, Fang,

McCallister, Eidson, Obernosterer, Jeckeln ’345, Zhu, Choi, Bassam ’857, Xin, Jelonnek ’375, Kilambi, Posti, and/or Ahmed, render obvious the Asserted Claims of the ’296 Patent.

- Jelonnek, alone or in combination with Ceylan, Gupta, Cidronali, Wang, Maltsev, Peroulas, Hongo, Kim, Bassam, Zhurbenko, Altera, Barrak, Woo, Fang, McCallister, Eidson, Obernosterer, Jeckeln ’345, Zhu, Choi, Bassam ’857, Xin, Jelonnek ’375, Kilambi, Posti, and/or Ahmed, render obvious the Asserted Claims of the ’296 Patent.
- Fang, alone or in combination with Ceylan, Gupta, Cidronali, Wang, Maltsev, Peroulas, Hongo, Kim, Bassam, Zhurbenko, Altera, Barrak, Jelonnek, Woo, McCallister, Eidson, Obernosterer, Jeckeln ’345, Zhu, Choi, Bassam ’857, Xin, Jelonnek ’375, Kilambi, Posti, and/or Ahmed, render obvious the Asserted Claims of the ’296 Patent.
- McCallister alone or in combination with Ceylan, Gupta, Cidronali, Wang, Maltsev, Peroulas, Hongo, Kim, Bassam, Zhurbenko, Altera, Barrak, Jelonnek, Woo, Fang, Eidson, Obernosterer, Jeckeln ’345, Zhu, Choi, Bassam ’857, Xin, Jelonnek ’375, Kilambi, Posti, and/or Ahmed, render obvious the Asserted Claims of the ’296 Patent.
- Eidson, alone or in combination with Ceylan, Gupta, Cidronali, Wang, Maltsev, Peroulas, Hongo, Kim, Bassam, Zhurbenko, Altera, Barrak, Jelonnek, Woo, McCallister, Fang, Obernosterer, Jeckeln ’345, Zhu, Choi, Bassam ’857, Xin, Jelonnek ’375, Kilambi, Posti, and/or Ahmed, render obvious the Asserted Claims of the ’296 Patent.

- Obernosterer, alone or in combination with Ceylan, Gupta, Cidronali, Wang, Maltsev, Peroulas, Hongo, Kim, Bassam, Zhurbenko, Altera, Barrak, Jelonnek, Woo, McCallister, Eidson, Fang, Jeckeln ’345, Zhu, Choi, Bassam ’857, Xin, Jelonnek ’375, Kilambi, Posti, and/or Ahmed, render obvious the Asserted Claims of the ’296 Patent.
- Jeckeln ’345, alone or in combination with Ceylan, Gupta, Cidronali, Wang, Maltsev, Peroulas, Hongo, Kim, Bassam, Zhurbenko, Altera, Barrak, Jelonnek, Woo, McCallister, Eidson, Obernosterer, Fang, Zhu, Choi, Bassam ’857, Xin, Jelonnek ’375, Kilambi, Posti, and/or Ahmed, render obvious the Asserted Claims of the ’296 Patent.
- Zhu, alone or in combination with Ceylan, Gupta, Cidronali, Wang, Maltsev, Peroulas, Hongo, Kim, Bassam, Zhurbenko, Altera, Barrak, Jelonnek, Woo, McCallister, Eidson, Obernosterer, Fang, Jeckeln ’345 , Choi, Bassam ’857, Xin, Jelonnek ’375, Kilambi, Posti, and/or Ahmed, render obvious the Asserted Claims of the ’296 Patent.
- Choi, alone or in combination with Ceylan, Gupta, Cidronali, Wang, Maltsev, Peroulas, Hongo, Kim, Bassam, Zhurbenko, Altera, Barrak, Jelonnek, Woo, McCallister, Eidson, Obernosterer, Fang, Jeckeln ’345 , Zhu, Bassam ’857, Xin, Jelonnek ’375, Kilambi, Posti, and/or Ahmed, render obvious the Asserted Claims of the ’296 Patent.
- Bassam ’857, alone or in combination with Ceylan, Gupta, Cidronali, Wang, Maltsev, Peroulas, Hongo, Kim, Bassam, Zhurbenko, Altera, Barrak, Jelonnek, Woo, McCallister, Eidson, Obernosterer, Fang, Jeckeln ’345 , Choi, Zhu, Xin,

Jelonnek ’375, Kilambi, Posti, and/or Ahmed, render obvious the Asserted Claims of the ’296 Patent.

- Xin, alone or in combination with Ceylan, Gupta, Cidronali, Wang, Maltsev, Peroulas, Hongo, Kim, Bassam, Zhurbenko, Altera, Barrak, Jelonnek, Woo, McCallister, Eidson, Obernosterer, Fang, Jeckeln ’345 , Choi, Bassam ’857, Zhu, Jelonnek ’375, Kilambi, Posti, and/or Ahmed, render obvious the Asserted Claims of the ’296 Patent.
- Jelonnek ’375, alone or in combination with Ceylan, Gupta, Cidronali, Wang, Maltsev, Peroulas, Hongo, Kim, Bassam, Zhurbenko, Altera, Barrak, Jelonnek, Woo, McCallister, Eidson, Obernosterer, Fang, Jeckeln ’345 , Choi, Bassam ’857, Xin, Zhu, Kilambi, Posti, and/or Ahmed, render obvious the Asserted Claims of the ’296 Patent.
- Kilambi, alone or in combination with Ceylan, Gupta, Cidronali, Wang, Maltsev, Peroulas, Hongo, Kim, Bassam, Zhurbenko, Altera, Barrak, Jelonnek, Woo, McCallister, Eidson, Obernosterer, Fang, Jeckeln ’345 , Choi, Bassam ’857, Xin, Jelonnek ’375, Zhu, Posti, and/or Ahmed, render obvious the Asserted Claims of the ’296 Patent.
- Posti, alone or in combination with Ceylan, Gupta, Cidronali, Wang, Maltsev, Peroulas, Hongo, Kim, Bassam, Zhurbenko, Altera, Barrak, Jelonnek, Woo, McCallister, Eidson, Obernosterer, Fang, Jeckeln ’345 , Choi, Bassam ’857, Xin, Jelonnek ’375, Kilambi, Zhu, and/or Ahmed, render obvious the Asserted Claims of the ’296 Patent.

All of the items of prior art above are directed to systems and methods for pre-distorting

RF modulated signals to compensate for the behavior of a power amplifier, in accordance with the purported invention of the ’296 Patent. Combining the known features set forth by these items of prior art would constitute predictable variations contemplated by the ordinary skill in the art at the time of the alleged invention and would be likely to succeed. Combining the features of any of these items of prior art would constitute the mere combination of known elements according to known methods to yield predictable results. Specific to each such item of prior art, Defendants summarize below the reasons why one of ordinary skill in the art would have been motivated to combine such prior art with the other references in Table E.

a. Motivation for combining with Woo

One of ordinary skill in the art would have been motivated to combine Woo with any of the other references in Table E. Woo discloses a new adaptive digital predistortion (DPD) linearization technique based on analog feedback predistortion (FBPD). *See* Woo at Abstract.. For example, Woo discloses, “a new digital adaptive PD technique by employing analog feedback predistortion (FBPD) theory in the digital domain” where the “analog FBPD linearization method can accurately extract the PD signal and enhance the tolerance of the intermodulation (IM) distortion cancellation by the feedback linearization.” *Id.* at 932.

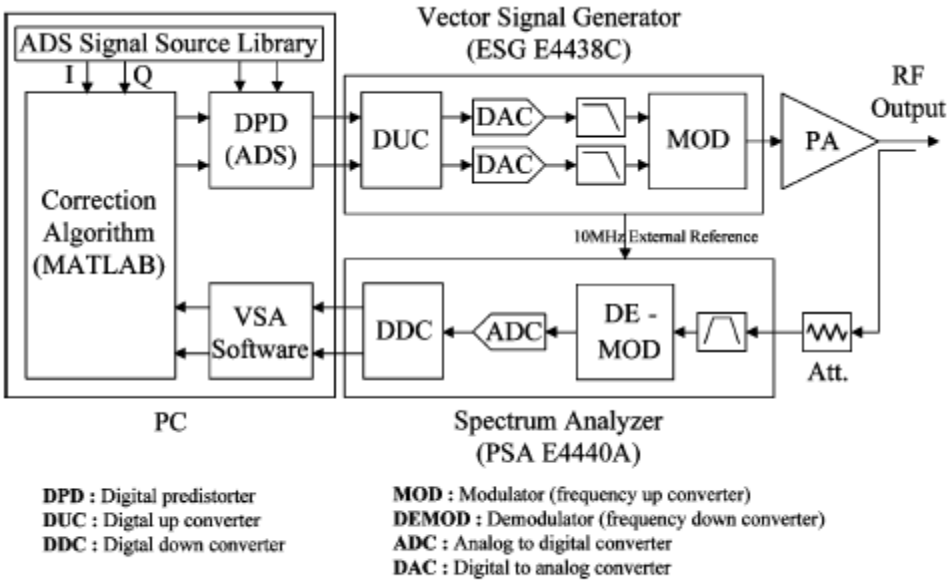

Fig. 9. Experimental setup of the DPD and FBPD.

As depicted in Fig. 9, Woo discloses a proposed digital feedback predistortion technique which accurately extract the predistortion signal and enhance the tolerance of intermodulation distortion cancellation by the feedback linearization. *Id.* at 933, 938, Fig. 9. One of ordinary skill in the art would be motivated to combine the teachings of Woo with other references disclosing digital predistortion and sampling techniques. One of ordinary skill in the art would have recognized that a combination with Woo combines known prior art elements according to known methods to yield predictable results. Woo and the other references identified in Table E use known techniques to improve similar devices or methods in the same way. Moreover, a combination with Woo was obvious to try because one of skill in the art would have chosen from a finite number of identified, predictable solutions, with a reasonable expectation of success.

b. Motivation for combining with Ceylan

One of ordinary skill in the art would have been motivated to combine Ceylan with any of the other references in Table E. Ceylan discloses an accurate and simple PA characterization method that utilizes look-up table (LUT) based memoryless digital predistortion (MDP) which

provides design flexibility for achieving good linearity and efficiency. *See* Ceylan at Abstract.. For example, Ceylan discloses, "adaptive DP is implemented in a mobile communications terminal using an additional feedback path" *Id*. at 117.

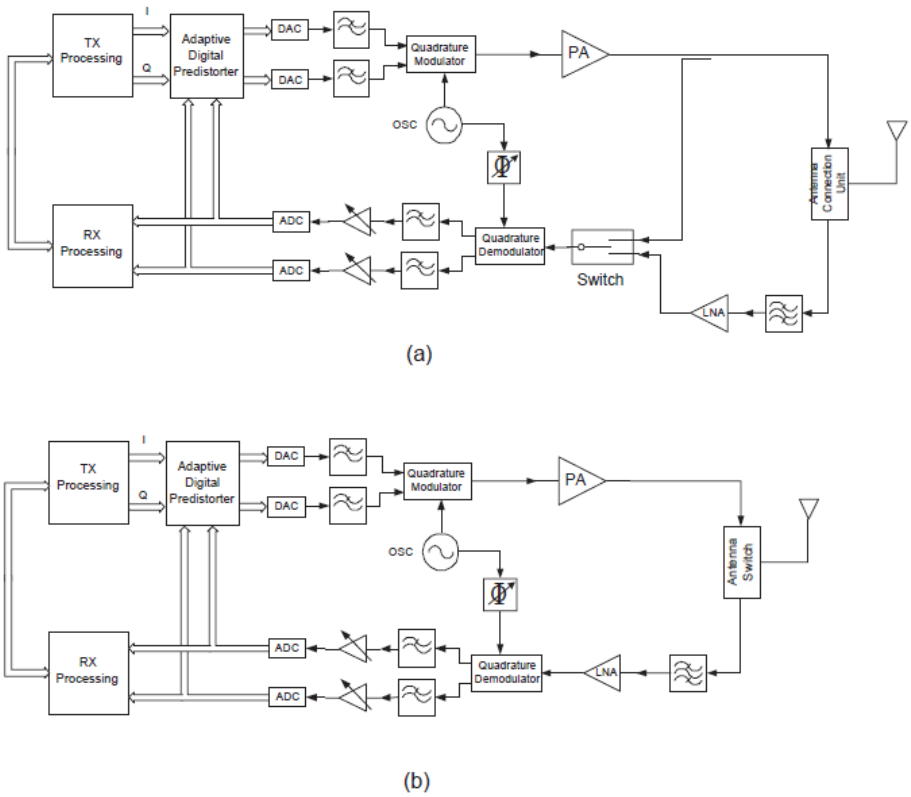

Figure 6.37: Block diagram of closed-loop digital predistortion implemented in a TDMA based system (a) with an additional coupler and a switch unit and (b) without additional components in the feedback path.

The teachings of Ceylan address the same problems and solutions as identified by the '296 Patent, which are aimed at linearization of a transmitter power amplifier in a high performance and efficient manner. One of ordinary skill in the art would have recognized that a combination with Ceylan combines known prior art elements according to known methods to yield predictable results. Ceylan and the other references identified in Table E use known techniques to improve similar devices or methods in the same way. Moreover, a combination with Ceylan was obvious to try because one of skill in the art would have chosen from a finite number of identified,

predictable solutions, with a reasonable expectation of success.

c. Motivation for combining with Gupta

One of ordinary skill in the art would have been motivated to combine Gupta with any of the other references in Table E. Gupta teaches "[a] new system architecture is presented for an RF transceiver in a wireless communication base station, wherein ultrafast multi-GHz digital data conversion and processing are carried out in a central ground station, and analog-RF amplification is carried out in tower-mounted units close to antennas." Gupta at [0027]. Furthermore, Gupta discloses that a "digital processor may be provided, adapted to predistort the signal to increase an effective spur-free dynamic range of the power radio frequency signal by reducing a power of at least one intermodulation product" wherein the "digital signal processor may comprise an input adapted to receive a feedback signal representing a distorted of the output, and wherein the predistortion is responsive to the feedback signal." *Id*. at [0047], [0066]; *see also*, *id.* at Fig. 4.

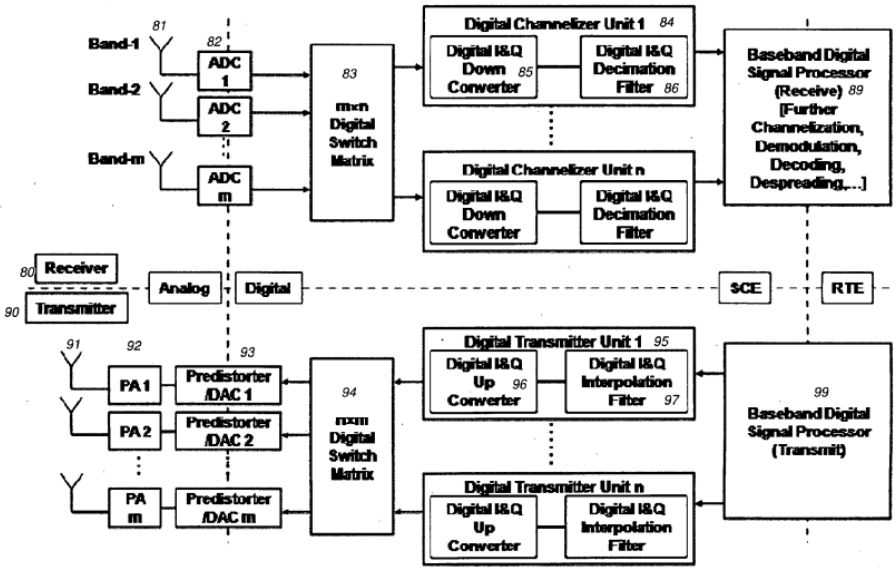

FIG. 4. Digital-RF™ Multichannel Transceiver

Gupta is unequivocally "directed towards radio-frequency (RF) transceivers, and more specifically towards transceivers that use direct digitization of RF signals, and digital processing

thereof." *Id.* at [0002]. The disclosure in Gupta provides "a new architecture for a radio system, leveraging the ultrafast digital-to-analog converter, analog-to-digital converter, and digital signal processing technologies presented herein." *Id*. at [0028]. One of ordinary skill in the art would have recognized that a combination with Gupta combines known prior art elements according to known methods to yield predictable results. Gupta and the other references identified in Table E use known techniques to improve similar devices or methods in the same way. Moreover, a combination with Gupta was obvious to try because one of skill in the art would have chosen from a finite number of identified, predictable solutions, with a reasonable expectation of success.

d. Motivation for combining with Cidronali

One of ordinary skill in the art would have been motivated to combine Cidronali with any of the other references in Table E. Cidronali discloses "a Dual Band Digital Predistorter (DB-DPD), suitable for concurrent dual-band power amplifiers" that includes a "sub-sampling receiver is at the basis of the feedback path, while the vectorial gain adjuster is achieved at the proper digital intermediate frequency." Cidronali at Abstract. The "Dual Band Digital Predistorter" of Cidronali is "capable of a simultaneous predistortion of a concurrent dual-band power amplifier at both frequency bands." *Id*. at 1.

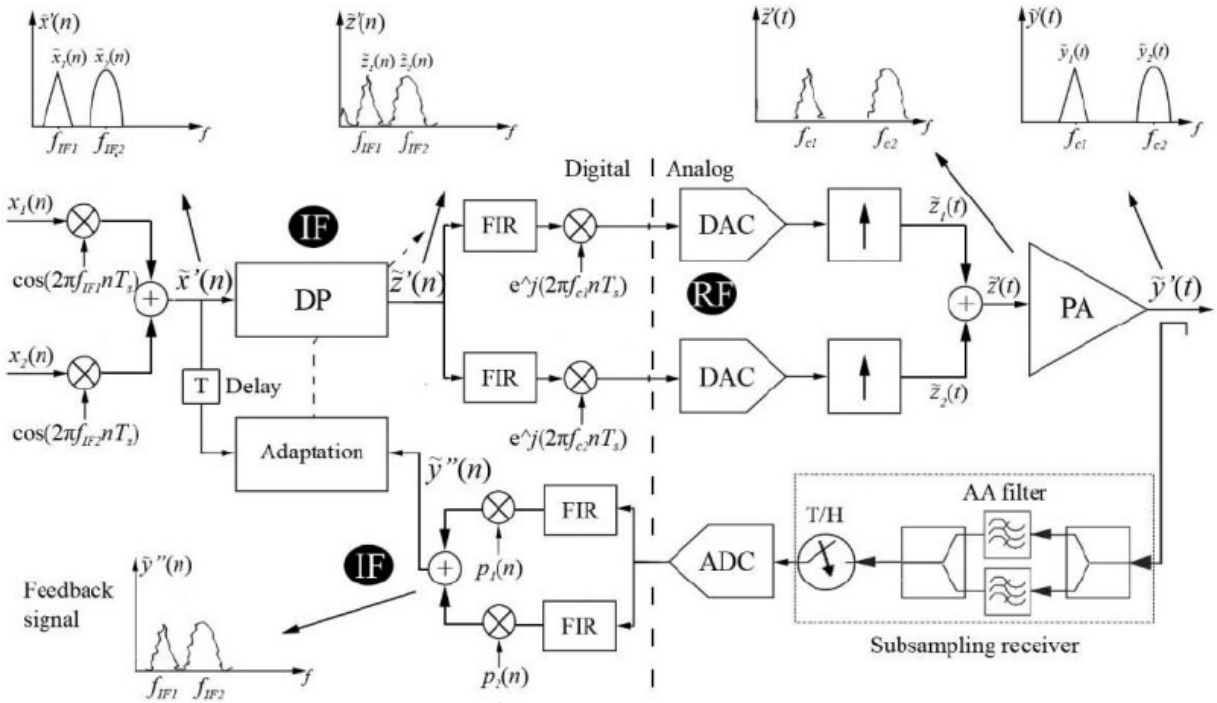

Fig. 4.DB-DP system with IF predistortion and subsampling feedback

As shown in Fig. 4, Cidronali teaches the "The proposed DB-DPD system architecture exploits a memory polynomial predistorter and a subsampling receiver as a feedback path" and "implements a memory polynomial predistorter and a direct learning training method similar to those involved in single band DP." *Id.* at 4. One of ordinary skill in the art would have recognized that a combination with Cidronali combines known prior art elements according to known methods to yield predictable results. Cidronali and the other references identified in Table E use known techniques to improve similar devices or methods in the same way. Moreover, a combination with Cidronali was obvious to try because one of skill in the art would have chosen from a finite number of identified, predictable solutions, with a reasonable expectation of success.

e. Motivation for combining with Wang

One of ordinary skill in the art would have been motivated to combine Wang with any of the other references in Table E. Wang "relates to a wideband adaptive digital predistortion engine

(WADPDE) device based on programmable equipment" that "comprises an input matrix module, a simulation baseband signal transmitter module, an interpolator module, a peak clipping module, a wideband digital predistorter module, an output matrix module, an MPU control kernel module and a USB interface module which are mutually connected by communication buses on a high-speed chip, wherein, the wideband digital predistorter module comprises a filter input generation module, a predistortion filter array module, a filter output combining module, a system buffer module, a DDC module, a delayed match module, a signal data buffer module, an interface control module and a coefficient estimation and updating algorithm module." Wang at Abstract.

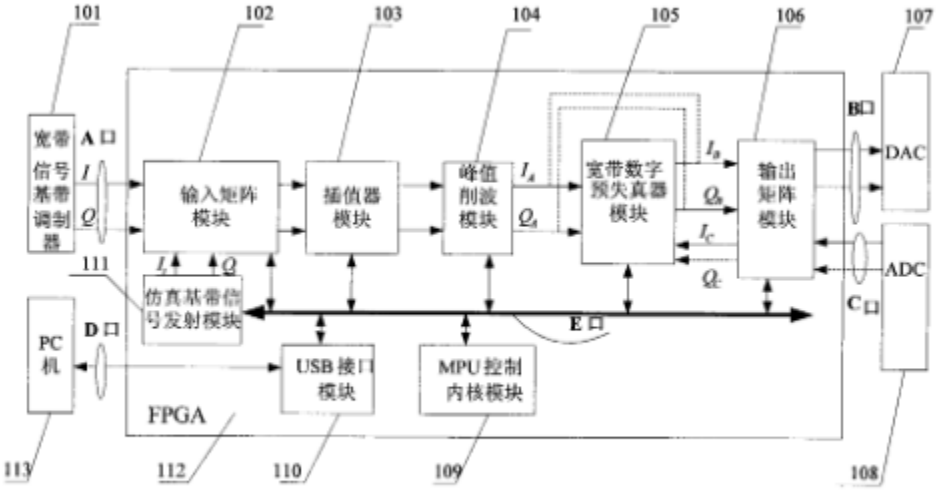

图 1

"As shown in Figure 1, be wideband adaptive digital predistortion engine apparatus structure collectivity block diagram of the present invention" that "is integrated into input matrix module 102, emulation baseband signal transmitter module 111, interpolation device module 103, peak value slicing module 104, wideband digital predistortion device module 105, output matrix module 106, MPU control kernel module 109 and usb interface module 110 among a slice FPGA 112 realizes that these modules all interconnect and be subjected to the control and the scheduling of MPU control kernel module by communication bus E mouth on the high-speed

chip." *Id*. at 4-5. Wang teaches a predistortion transmitter that overcomes "deficiencies of the prior art," a Wideband Adaptive Digital Predistortion Engine (WADPDE) device based on a programmable device. *Id.* at 2. One of ordinary skill in the art would have recognized that a combination with Wang combines known prior art elements according to known methods to yield predictable results. Wang and the other references identified in Table E use known techniques to improve similar devices or methods in the same way. Moreover, a combination with Wang was obvious to try because one of skill in the art would have chosen from a finite number of identified, predictable solutions, with a reasonable expectation of success.

f. Motivation for combining with Maltsev

One of ordinary skill in the art would have been motivated to combine Maltsev with any of the other references in Table E. Matlsev "relate[s] to wireless communications generally and, more specifically, to power amplifier linearization methods and apparatus using predistortion in the frequency domain." Maltsev at 1:8-11. Maltsev discloses a transmitter that "comprises an OFDM modulator 302, a predistortion block 304, a block 306 to perform inverse Fast Fourier Transform (IFFT) and to add a guard interval (GI), a digital-to-analog converter (DAC) 308, a first mixer 310, a local oscillator (LO) 312, a power amplifier (PA) 314, an antenna 316, a second mixer 318, an analog-to-digital converter (ADC) 320, and a polynomial approximation block 322." *Id*. at 6:28-35. Maltsev also teaches that "information on the optimized polynomial coefficients then goes to the predistortion block 304." *Id*. at 7:33-44; Fig. 3:

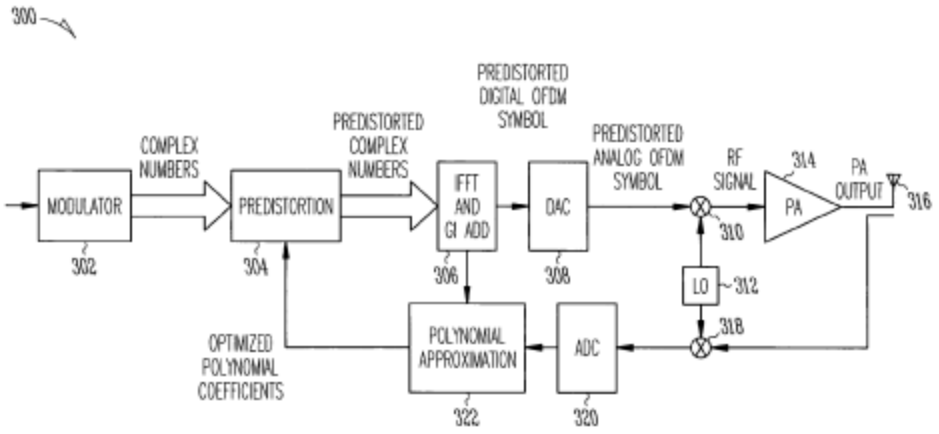

Fig. 3

One of ordinary skill in the art would have recognized that a combination with Maltsev combines known prior art elements according to known methods to yield predictable results. Maltsev and the other references identified in Table E use known techniques to improve similar devices or methods in the same way. Moreover, a combination with Maltsev was obvious to try because one of skill in the art would have chosen from a finite number of identified, predictable solutions, with a reasonable expectation of success.

g. Motivation for combining with Peroulas

One of ordinary skill in the art would have been motivated to combine Peroulas with any of the other references in Table E. Peroulas discloses "a pre-distorter, which comprises: a pre-distortion module, which is configured to pre-distort a plurality of baseband input signals by an equal number of pre-distortion functions to obtain equal number of pre-distorted signals respectively, wherein all of the baseband input signals input into every pre-distortion function, and each pre-distortion function has one output; an adder, which is configured to combine all of the pre-distorted signals output from every pre-distortion functions into one combined signal; and a power amplifier (PA), which is configure to amplify the combined signal, wherein the cascade of the pre-distortion functions and the PA are linear overall." Peroulas at Abstract; Fig. 3:

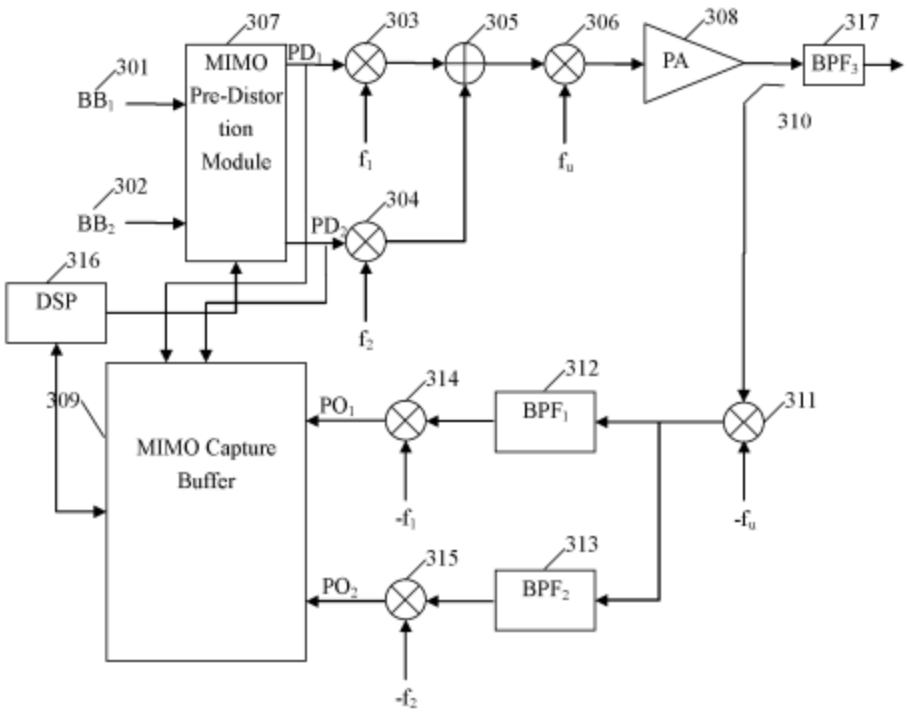

FIG. 3

Peroulas further discloses that a "model is created by capturing the samples of several signals using a MIMO capture buffer 30" and that the "number of samples required to be captured by the MIMO capture buffer 309 varies based on the PA 308 and the type of signals to be transmitted, but typically, between 2000 and 10000 samples of each signal coming into the MIMO capture buffer 309." *Id*. at 25:15-22. One of ordinary skill in the art would have recognized that a combination with Peroulas combines known prior art elements according to known methods to yield predictable results. Peroulas and the other references identified in Table E use known techniques to improve similar devices or methods in the same way. Moreover, a combination with Peroulas was obvious to try because one of skill in the art would have chosen from a finite number of identified, predictable solutions, with a reasonable expectation of success.

h. Motivation for combining with Hongo

One of ordinary skill in the art would have been motivated to combine Hongo with any of

the other references in Table E. Hongo teaches a "distortion compensator for compensating for distortion produced in an amplifier that amplifies a signal includes a signal level detection means for detecting a level of a signal to be amplified and distortion compensation means for conducting distortion compensation based on the detection result separately for each frequency band signal of multiple frequency band signals contained in the signal to be amplified." Hongo at Abstract.

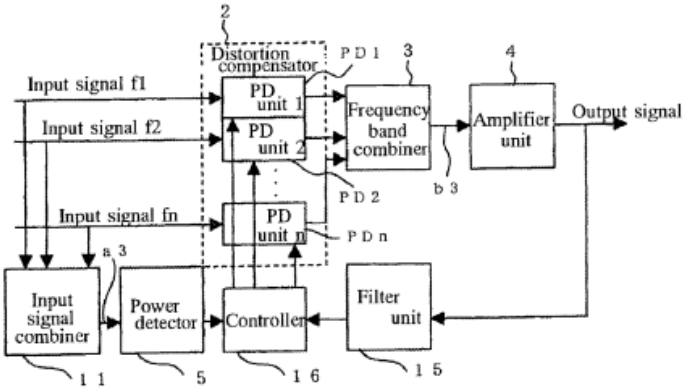

Fig.6

A person of ordinary skill in the art would have identified Hongo because Hongo discloses functional components that were well known in the art. For example, in embodiments depicted in Fig. 6, Hongo discloses a multi-band amplifier device that comprises "a distortion compensator 2 having multiple predistortion units PD1-PDn, a frequency band combiner 3, an amplifier unit 4, a power detector 5, a filter unit 15 and a controller 16" that linearizes across multiple input frequencies. *Id*. at [0183]-[0184]. One of ordinary skill in the art would have recognized that a combination with Hongo combines known prior art elements according to known methods to yield predictable results. Hongo and the other references identified in Table E use known techniques to improve similar devices or methods in the same way. Moreover, a combination with Hongo was obvious to try because one of skill in the art would have chosen from a finite number of identified, predictable solutions, with a reasonable expectation of success.

i. Motivation for combining with Kim

One of ordinary skill in the art would have been motivated to combine Kim with any of the other references in Table E. Kim discloses a "wideband communication systems using multiplexing modulation" and more specifically "a method of increasing instantaneous or operational bandwidth for digital predistortion linearization in order to compensate for nonlinearities and/or memory effects in multi-channel wideband wireless transmitters." Kim at 1:18-24. Similar to the problems identified in the '296 Patent, Kim teaches that the " linearity and efficiency of radio frequency (RF) power amplifiers (PAs) have become critical design issues for non-constant envelope digital modulation schemes with high peak-to-average power ratio (PAR) values" because there is an "increased importance of spectral efficiency in wireless communication systems." *Id*. at 1:25-45. Consequently, Kim discloses that because "RF PAs have nonlinearities which generate amplitude modulation-amplitude modulation (AM-AM) distortion and amplitude modulation-phase modulation (AM-PM) distortion at the output of the PA", "there is a need in the art for improved methods and systems related to communications systems." *Id*. at 1:25-45.

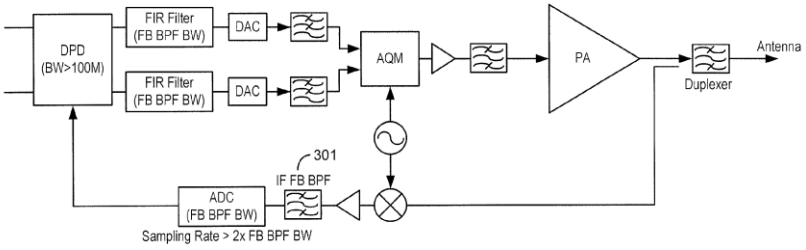

FIG. 3

Id. at Fig. 3.

According to various embodiments, Kim teaches a multiband communications circuit that "utilizes the bandpass characteristic of the duplexer associated with frequency division duplex wireless systems, so that the DPD is only required to provide distortion reduction over the reduced

bandwidth of the PA output signals." *Id*. at 3:23-43. One of ordinary skill in the art would have recognized that a combination with Kim combines known prior art elements according to known methods to yield predictable results. Kim and the other references identified in Table E use known techniques to improve similar devices or methods in the same way. Moreover, a combination with Kim was obvious to try because one of skill in the art would have chosen from a finite number of identified, predictable solutions, with a reasonable expectation of success.

j. Motivation for combining with Bassam

One of ordinary skill in the art would have been motivated to combine Bassam with any of the other references in Table E. Bassam teaches "a novel crossover digital pre- distorter (CO-DPD) model to compensate for crosstalk and nonlinearity in multiple-input multiple-output (MIMO) radio systems." Bassam at Abstract. Consistent with the problems identified in the '296 Patent Bassam notes that the "increasing demand for high data rates in new wireless applications has raised interest in increasing channel capacity by optimizing its spectral efficiency" and that "Multiple-input multiple-output (MIMO) topology is one of the most promising solutions in improving the spectral efficiency of wireless systems." *Id*. at 1119. Bassam notes that the power amplifier is "one of the most challenging blocks in designing a wireless transmitter, and as such, its efficiency significantly affects the overall efficiency of the transmitter." *Id*. at 1120.

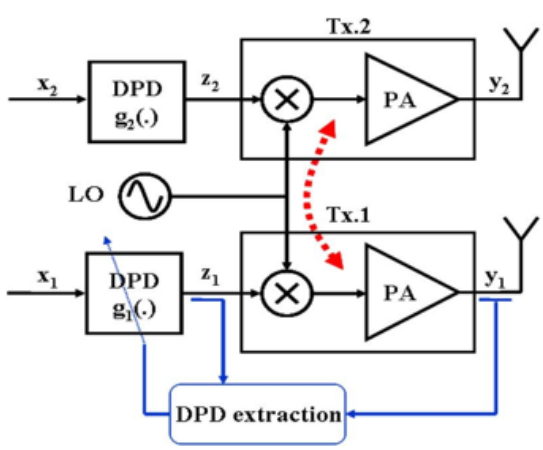

Fig. 5. DPD and PA with nonlinear crosstalk in MIMO system.

Consistent with the alleged novelty of the ’296 Patent, Bassam proposes a linearization technique to improve the efficiency of wireless transmitters by sampling the predistortion module and compensating for the dynamic (memory effect) associated with the wireless transmitter by updating the coefficients in the predistortion module. *Id*. at 1120. One of ordinary skill in the art would have recognized that a combination with Bassam combines known prior art elements according to known methods to yield predictable results. Bassam and the other references identified in Table E use known techniques to improve similar devices or methods in the same way. Moreover, a combination with Bassam was obvious to try because one of skill in the art would have chosen from a finite number of identified, predictable solutions, with a reasonable expectation of success.

k. Motivation for combining with Zhurbenko

One of ordinary skill in the art would have been motivated to combine Zhurbenko with any of the other references in Table E. Zhurbenko discloses a comprehensive overview and detailed analysis associated with the state of the art of wireless communications circuits and system in a textbook entitled “Advanced Microwave Circuits and Systems.” Zhurbenko at 1. Consistent with the technology disclosed in the Asserted Patents, Zhurbenko discusses six aspects associated with the “design and development of active and passive microwave components, integrated circuits, and systems.” *Id*. at Preface. In the first two chapters, Zhurbenko discloses alternative concepts and equations for multiport network analysis and characterization. Zhurbenko goes on to discuss the analysis and design of ultra-wideband lownoise amplifiers (LNA), power amplifier design and application, and signal generation and control of linearization effects.

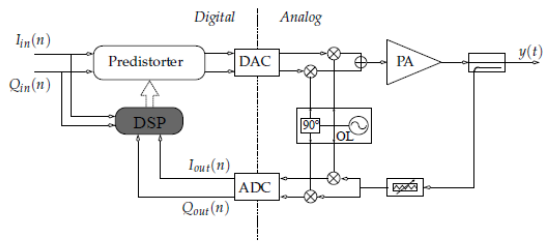

Fig. 12. Adaptive digital baseband predistortion

polynomial approximating the inverse of the PA's characteristics are found, and the DP output $z(n)$ is given by:

$$z(n)=a_1x(n)+a_2x(n)+a_3x(n)+\cdots \quad (12)$$

The coefficients vector a can be found through a recursive algorithm based on the Indirect Learning architecture shown in Fig. 25. The name derives from the fact that the polynomial coefficients are found without passing by the determination of the PA's characteristics.

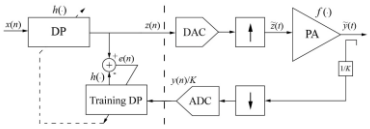

Fig. 25. Indirect Learning schematic principle for a DPD system

Consistent with the alleged novelties claimed in the Asserted Patent, Zhurbenko discloses similar solutions to include using predistortion sampling and power amplifier feedback for updating modeling of the predistortion module and improving linearization of the power amplifier. *See e.g.*, *id.* at Chapter 7. One of ordinary skill in the art would have recognized that a combination with Zhurbenko combines known prior art elements according to known methods to yield predictable results. Zhurbenko and the other references identified in Table E use known techniques to improve similar devices or methods in the same way. Moreover, a combination with Zhurbenko was obvious to try because one of skill in the art would have chosen from a finite number of identified, predictable solutions, with a reasonable expectation of success.

l. Motivation for combining with Altera

One of ordinary skill in the art would have been motivated to combine Altera with any of the other references in Table E. Prior to its acquisition by Intel in 2015, the Altera Corporation became an industry leader in the manufacturing and design of programmable logic devices. The Altera Corporation published a "Digital Predistortion Reference Design" ("Altera") that identified the need for power amplifiers in third-generation (3G) wireless communication systems to need "high linearity at the PA output, to achieve high adjacent channel leakage ratio (ACLR) and low error vector magnitude (EVM)." Altera at 1. Altera teaches techniques for achieving a "high efficiency" wireless communication system by utilizing digital predistortion." *Id.*

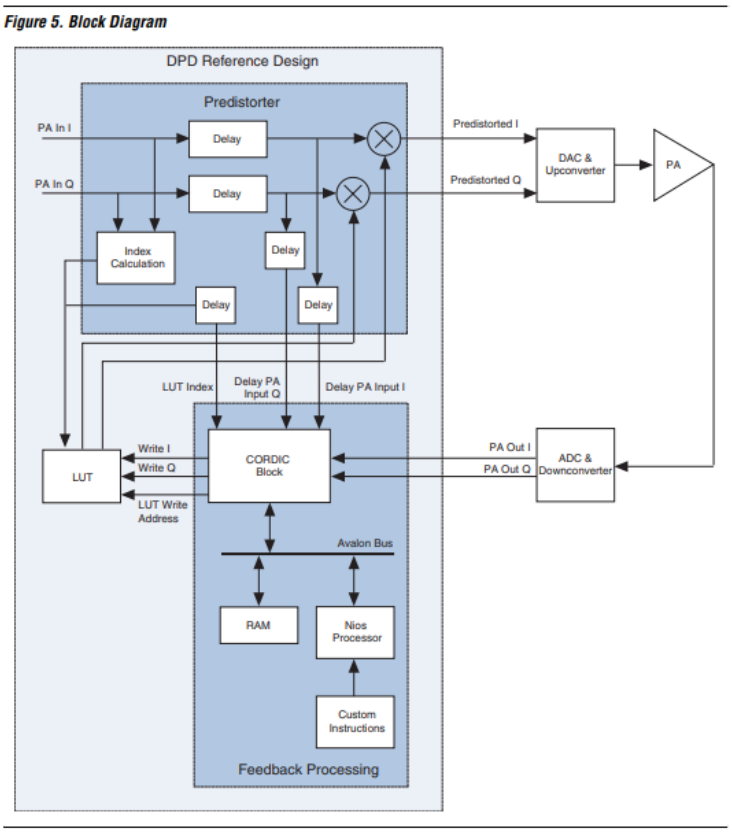

The reference design is an adaptive LUT-based DPD solution.

Altera teaches solutions for improving linearization at the power amplifier by sampling both feedback from the output of the power amplifier and the digital predistortion module to adjust lookup tables associated with the predisotrtion module. *See e.g.*, *id*. at Fig. 5. One of ordinary skill in the art would have recognized that a combination with Altera combines known prior art elements according to known methods to yield predictable results. Altera and the other references identified in Table E use known techniques to improve similar devices or methods in the same way. Moreover, a combination with Altera was obvious to try because one of skill in the art would have chosen from a finite number of identified, predictable solutions, with a reasonable expectation of success.

m. Motivation for combining with Barrak

One of ordinary skill in the art would have been motivated to combine Barrak with any of

the other references in Table E. Barrak discloses improved and optimized RF subsampling techniques for improving the linearization of a power amplifier. Barrak identifies that subsampling the output of DPD and tuning the channel selection utilizing components well known in the art and identified in the Asserted Claims of the Asserted Patent can enhance and improve the efficiency of transmitter circuitry. *See e.g.*, Barrak at Fig.1:

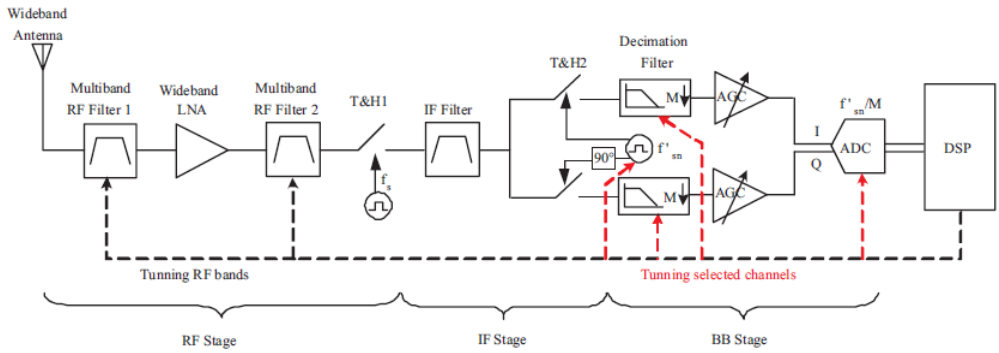

One of ordinary skill in the art would have recognized that a combination with Barrak combines known prior art elements according to known methods to yield predictable results. Barrak and the other references identified in Table E use known techniques to improve similar devices or methods in the same way. Moreover, a combination with Barrak was obvious to try because one of skill in the art would have chosen from a finite number of identified, predictable solutions, with a reasonable expectation of success.

n. Motivation for combining with Jelonnek

One of ordinary skill in the art would have been motivated to combine Jelonnek with any of the other references in Table E. Jelonnek relates to "to a system and a method for digital predistortion of a complex baseband input signal which is fed to a transmitted power amplifier to generate a high-frequency multicarrier transmit signal." Jelonnek at 1:16-19. As shown in Figs. 10 and 12 below, Jelonnek discloses sampling and updating the predistortion module estimation paramaerts and utilizing a feedback circuit to improve the efficiency of a power amplifier by

reducing non-linear circuit effects. *See* Jelonnek at 13:22-27, 2:52-58 ("With the aid of the method and system proposed by the inventor, a signal x(k) is digitally predistorted by a non-linear function, which takes into account the memory effects of a transmit power amplifier with the aid of a device for broadband predistortion."); *id.* at 4:5-15 ("The feedback branch features, connected in series, a demodulator DEM1, a broadband receive filter RxF1 and an A/D converter ADC1, which is connected on the output side to the device for broadband parameter estimation PPRE1.").

FIG 10

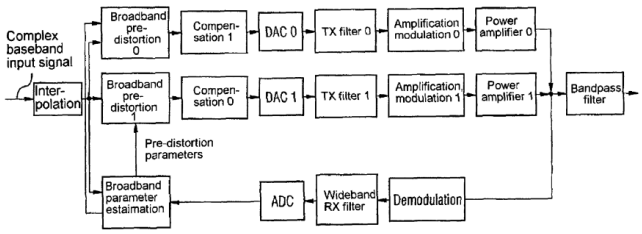

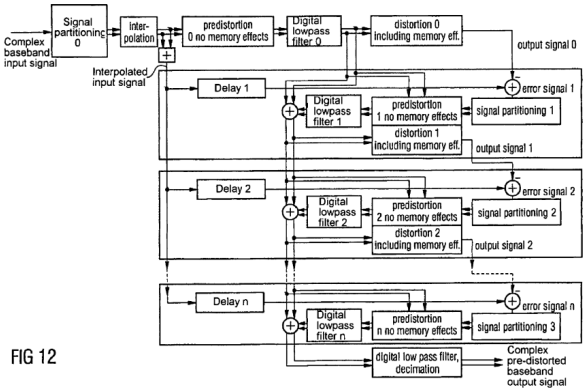

FIG 12

One of ordinary skill in the art would have recognized that a combination with Jelonnek combines known prior art elements according to known methods to yield predictable results. Jelonnek and the other references identified in Table E use known techniques to improve similar devices or methods in the same way. Moreover, a combination with Jelonnek was obvious to try because one of skill in the art would have chosen from a finite number of identified, predictable solutions, with a reasonable expectation of success.

o. Motivation for combining with Fang

One of ordinary skill in the art would have been motivated to combine Fang with any of the other references in Table E. Fang discloses a "pre-distortion signal generating module, a pre-distortion signal processing module, a feedback module and a parameter identification module, wherein an input signal of a radio-frequency power amplifier is acquired after a pre-distortion

signal is processed by the pre-distortion signal processing module; after a small part of power in an output signal of the radio-frequency power amplifier is weakened, the output signal enters the feedback module; an input signal of the parameter identification module is acquired after a feedback signal is processed by the feedback module; an output signal of the parameter identification module is compared with the pre-distortion signal through the parameter identification module so as to acquire an error signal; and the error signal is gradually reduced and returns to zero by adjusting the parameters of the identification module and a pre-distorter." *Id*. at Abstract; Figs. 1 and 2:

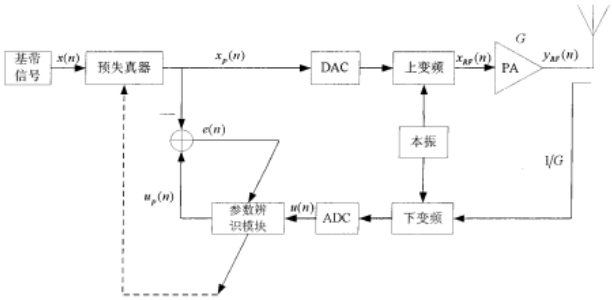

图 1

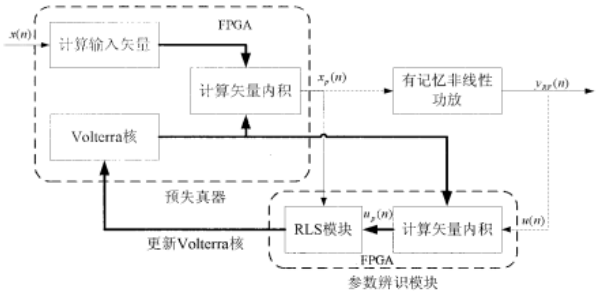

图 2

One of ordinary skill in the art would have recognized that a combination with Fang combines known prior art elements according to known methods to yield predictable results. Fang and the other references identified in Table E use known techniques to improve similar devices or methods in the same way. Moreover, a combination with Fang was obvious to try because one of skill in the art would have chosen from a finite number of identified, predictable solutions, with a

reasonable expectation of success.

p. Motivation for combining with Ahmed

One of ordinary skill in the art would have been motivated to combine Ahmed with any of the other references in Table E. Ahmed relates to an "apparatus and method for characterizing an amplifier transmitting a band limited signal using a sample of the input signal to the amplifier and a sample of the output signal from the amplifier, where the output signal is sub-sampled." Ahmed at Abstract. Ahmed teaches that the subsampling allows for the "results of the analysis may be used to construct or modify the parameters of algorithms in either the transmitter circuitry, or in a device disposed (not shown) between the transmitter circuitry 10 and the PA input so as to pre-distort the signal applied to the input of the PA to reduce or substantially eliminate the measured distortion" and that the "parametric aspects of the pre-distortion circuitry may be adjusted periodically based on the measured results, as it may be expected that the distortion characteristics of the PA may vary with temperature, transmitted signal bandwidth and amplitude and the like." *Id*. at [0036]; *see also*, *id.* at Fig. 2:

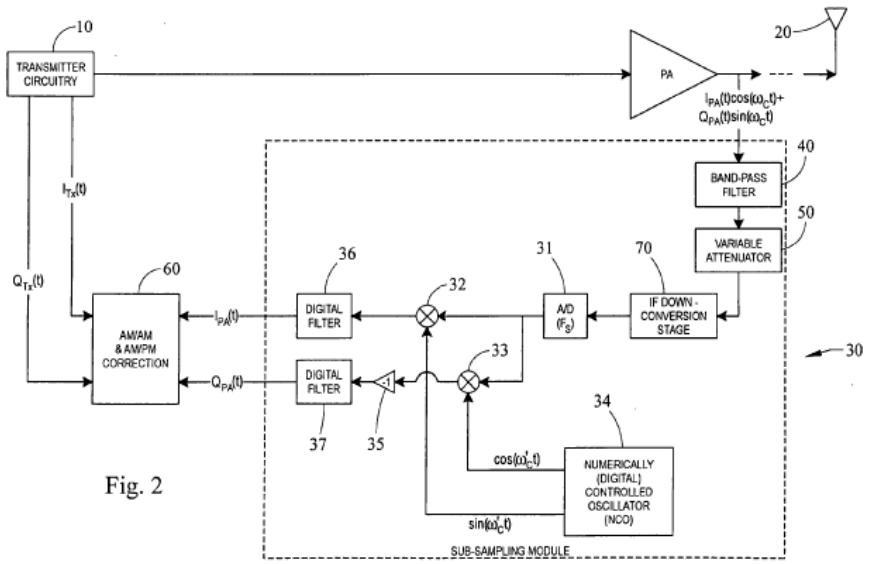

Fig. 2

One of ordinary skill in the art would have recognized that a combination with Ahmed

combines known prior art elements according to known methods to yield predictable results. Ahmed and the other references identified in Table E use known techniques to improve similar devices or methods in the same way. Moreover, a combination with Ahmed was obvious to try because one of skill in the art would have chosen from a finite number of identified, predictable solutions, with a reasonable expectation of success.

q. Motivation for combining with McCallister

One of ordinary skill in the art would have been motivated to combine McCallister with any of the other references in Table E. McCallister discloses, "a digital communications transmitter that includes "a digital linear and nonlinear predistortion section (200, 1800) to compensate for linear and nonlinear distortion introduced by transmitter-analog components." McCallister at Abstract. For example, McCallister explains that the reduction of linear distortion becomes more desirable as a communications signal becomes more wideband; however, conventional receivers failed to address this issue. *Id*. at [0022]–[0023]. McCallister then discloses an improved predistortion circuit and method for compensating for linear and nonlinear distortions, as well as distortion introduced in feedback signals, and through heat-induced memory effects. *Id*. at [0024]–[0028]. McCallister explains that "the benefits of the present invention are best appreciated with forms of modulation where both amplitude and phase are used to digitally convey the information," such as "quadrature-amplitude modulation (QAM), code-division-multiple-access (CDMA), orthogonal-frequency-division modulation (OFDM), multiple-input, multiple-output systems, and the like." *Id*. at [0058]; Fig. 19.

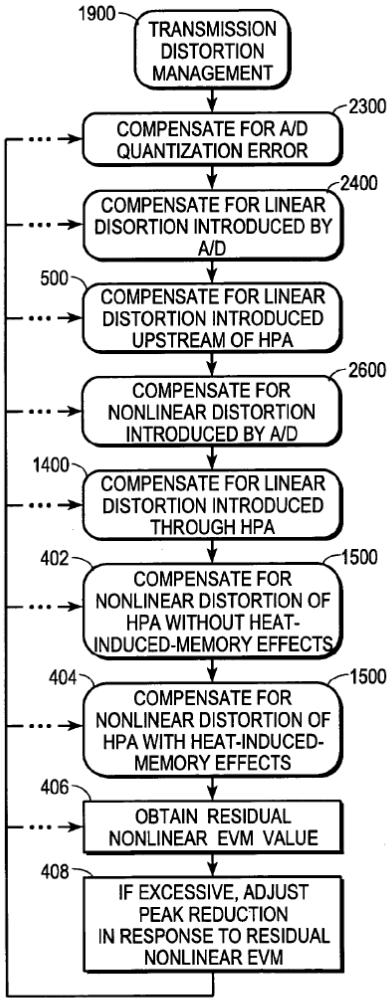

FIG. 19

One of ordinary skill in the art would recognize, in view of McCallister's teachings concerning digital predistortion involving linear and nonlinear components, that predistortion in MIMO RF transmitters could be improved by employing the techniques of McCallister to compensate for linear and nonlinear distortion introduced through A/D conversion, power amplifiers, and heat-induced memory effects. One of ordinary skill in the art would have recognized that a combination with McCallister combines prior art elements according to known methods to yield predictable results. McCallister and the other references use known techniques to improve similar devices or methods in the same way. Moreover, a combination with McCallister was obvious to try because one of skill in the art would have chosen from a finite number of identified, predictable solutions, with a reasonable expectation of success.

r. Motivation for combining with Eidson

One of ordinary skill in the art would have been motivated to combine Eidson with any of the other references in Table E. Eidson teaches "A system for pre-distorting samples derived from modulated data symbols to compensate, at least in part, for non-linear operation of a power amplifier in a power-constrained remote relay station." Eidson at Abstract. As shown in Fig. 7C below, Eidson discloses a "a system according to the invention for pre-distorting samples derived from modulation symbols to account for distortion introduced by a power-constrained remote relay station" in which "incoming samples are pre-distorted, upconverted to RF frequencies, and then

transmitted" and providing "for dynamically updating the pre-distortion applied by the first system responsive to any residual distortion still present in the transmitted signal." Eidson at [0044], [0056], Fig. 7C.

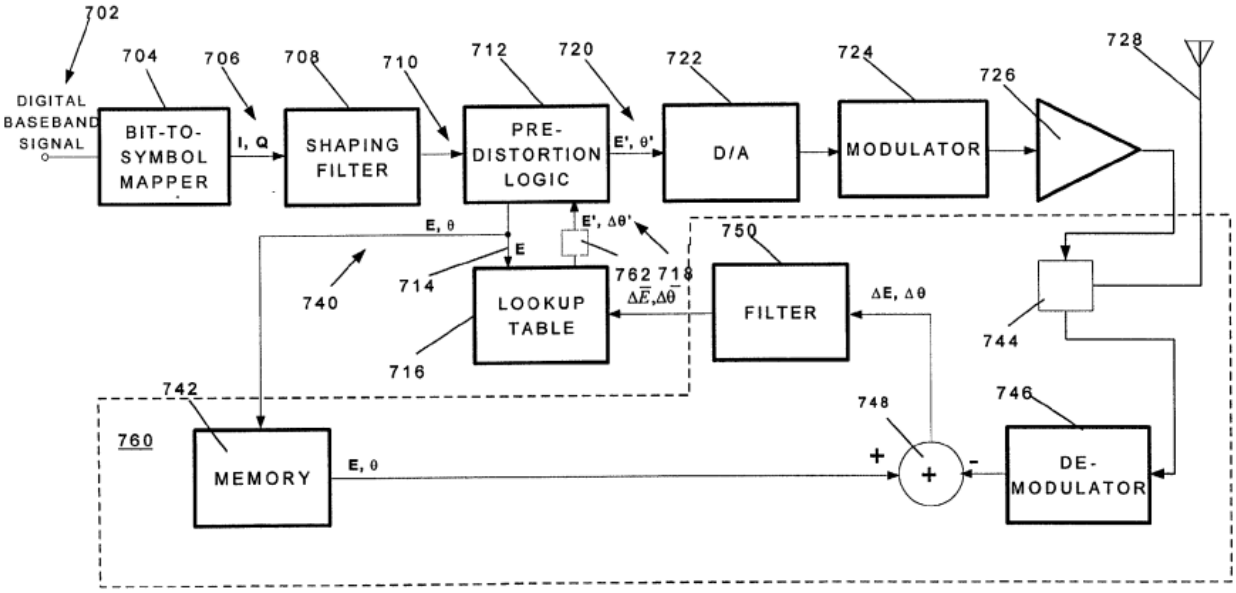

Figure 7C

Consistent with the alleged novelty of the '296 Patent, Eidson proposes a linearization technique to improve the efficiency of wireless transmitters by sampling the predistortion module and compensating for the dynamic (memory effect) associated with the wireless transmitter by updating the coefficients in the predistortion module. *Id.* One of ordinary skill in the art would have recognized that a combination with Eidson combines known prior art elements according to known methods to yield predictable results. Eidson and the other references identified in Table E use known techniques to improve similar devices or methods in the same way. Moreover, a combination with Eidson was obvious to try because one of skill in the art would have chosen from a finite number of identified, predictable solutions, with a reasonable expectation of success.

s. Motivation for combining with Obernosterer

One of ordinary skill in the art would have been motivated to combine Obernosterer with

any of the other references in Table E. As depicted in Fig. 1 (reproduced below), Obernosterer teaches "A power amplifier predistortion method involves generating a reverse model of a power amplifier block. The reverse model is based on modeled output signal values of the power amplifier block and sampled output signal values of the power amplifier block." Obernosterer at Abstract. Obernosterer discloses "[i] n an exemplary embodiment of the present invention, a power amplifier predistortion system may include a predistorter that distorts input signal values to produce output signal values at a first sample rate. The system may also include a power amplifier block having an amplification chain that amplifies the output signal values of the predistorter to produce an amplified signal, and a feedback receiver that samples the amplified signal at a second sample rate to produce sampled output signal values. A forward modeler models the power amplifier block in a forward direction to produce modeled output signal values. A parameter estimator updates parameters of the predistorter based on the sampled output signal values from the feedback receiver and the modeled output signal values from the forward modeler." Obernosterer at [0009].

Fig. 1

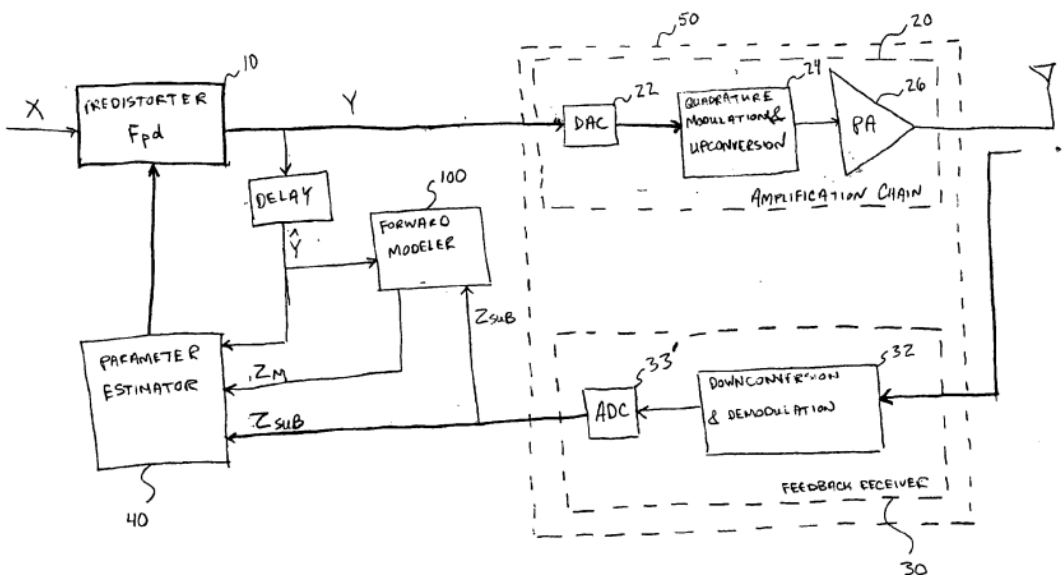

Consistent with the alleged novelty of the '296 Patent, Obernosterer proposes a

linearization technique to improve the efficiency of wireless transmitters by sampling the predistortion module and compensating for the dynamic (memory effect) associated with the wireless transmitter by updating the coefficients in the predistortion module. *Id.* One of ordinary skill in the art would have recognized that a combination with Obernosterer combines known prior art elements according to known methods to yield predictable results. Obernosterer and the other references identified in Table E use known techniques to improve similar devices or methods in the same way. Moreover, a combination with Obernosterer was obvious to try because one of skill in the art would have chosen from a finite number of identified, predictable solutions, with a reasonable expectation of success.

t. Motivation for combining with Jeckeln '345

One of ordinary skill in the art would have been motivated to combine Jeckeln '345 with any of the other references in Table E. Jeckeln '345 discloses an "advanced adaptive baseband/RF predistorting device, which advantageously uses the concept of digital receiver technology into power amplifier (PA) linearization area." Jeckeln '345 at Abstract. As depicted in Fig. 1, Jeckeln '345 teaches a "predistorting device 20 has two inputs 22 and 24 and an output 26. The first input 22 is connected to the low level RF output 28 of a low level RF signal source 30 to thereby receive an input RF signal therefrom; and the second input 24 is connected to the RF output 32 of a PA 34. The RF output 32 delivering an amplified output RF signal. The output 26, on the other hand, is connected to the input 36 of the PA 34." Jeckeln '345 at 5:17-65.

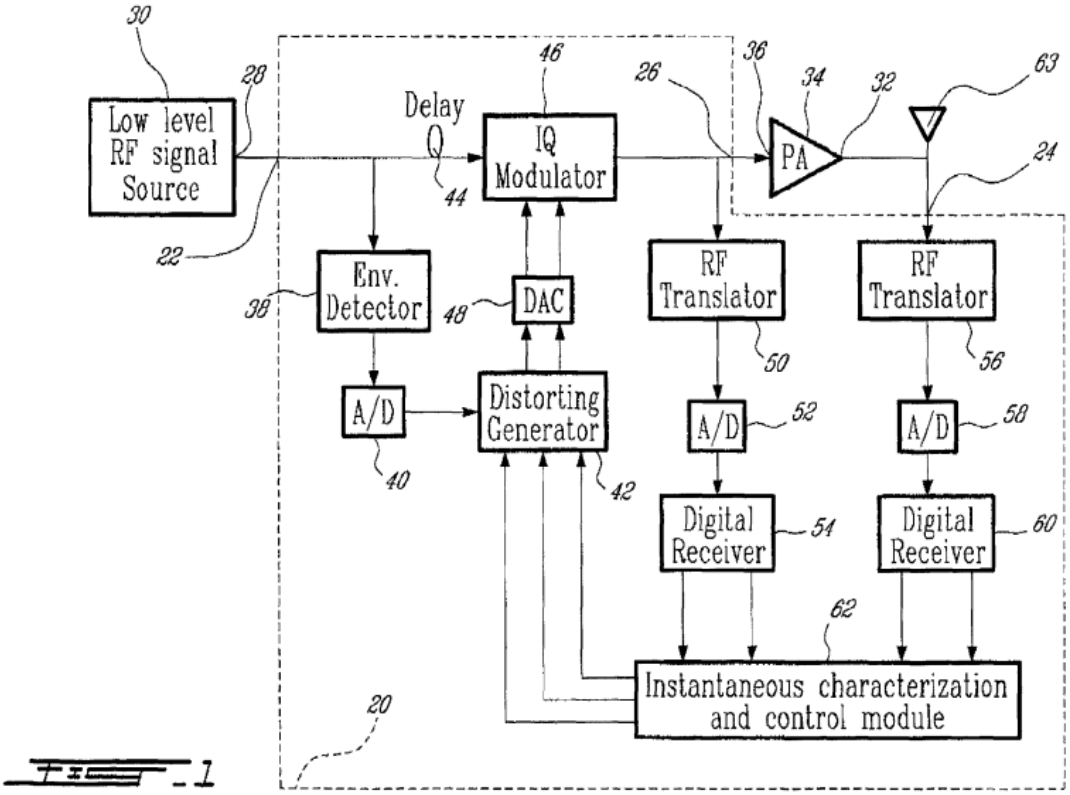

FIG. 1

One of ordinary skill in the art would have recognized that a combination with Jeckeln ’345 combines known prior art elements according to known methods to yield predictable results. Jeckeln ’345 and the other references identified in Table E use known techniques to improve similar devices or methods in the same way. Moreover, a combination with Jeckeln ’345 was obvious to try because one of skill in the art would have chosen from a finite number of identified, predictable solutions, with a reasonable expectation of success.

u. Motivation for combining with Zhu

One of ordinary skill in the art would have been motivated to combine Zhu with any of the other references in Table E. As depicted in Figs. 5 and 6, Zhu discloses a predistortion linear transmitter that updates a model according to sampling from the output of the digital predistorter. *See e.g.*, Zhu at Figs. 5 and 6:

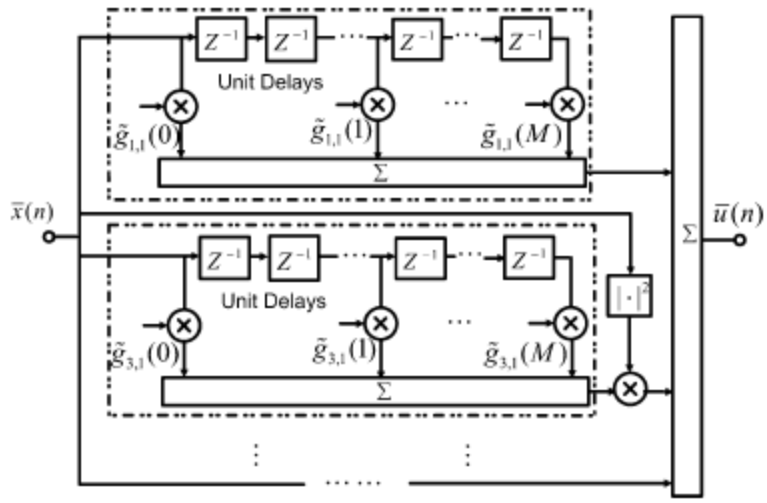

Fig. 5. Sample of DPD implementation.

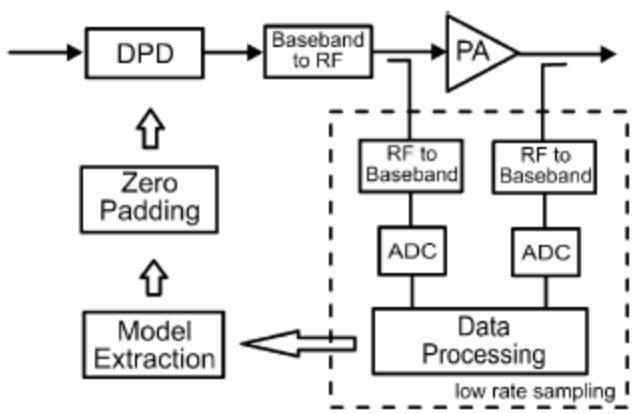

Fig. 6. Block diagram of digital predistortion characterization.

One of ordinary skill in the art would have recognized that a combination with Zhu combines known prior art elements according to known methods to yield predictable results. Zhu and the other references identified in Table E use known techniques to improve similar devices or methods in the same way. Moreover, a combination with Zhu was obvious to try because one of skill in the art would have chosen from a finite number of identified, predictable solutions, with a reasonable expectation of success.

v. Motivation for combining with Choi

One of ordinary skill in the art would have been motivated to combine Choi with any of

the other references in Table E. Choi discloses "A new digital predistortion (DPD) technique for multi-band signals is proposed. The transmitter considered in this paper has multi-band signals, and those signals are combined and amplified by a single wideband power amplifier (PA). In this case, the PA output is distorted by the nonlinear crossproducts between different-band signals as well as their own nonlinear self-products. To linearize the PA and remove those nonlinear products, we propose a PD structure, which has multiple predistorters (one predistorter (PD) for one band). Each PD removes the nonlinear cross-products and self-products to mitigate the spectral regrowth for the corresponding band. Since the PD parameters for different bands are linked together, it is difficult to find the PD parameters separately. As an alternative method, we propose an iterative method for finding the PD parameters. The simulation results show that the iterative method converges well, and the proposed PD can effectively linearize the PA and remove spectral regrowth at each signal band." Choi at Abstract. *See* Choi at Fig. 3:

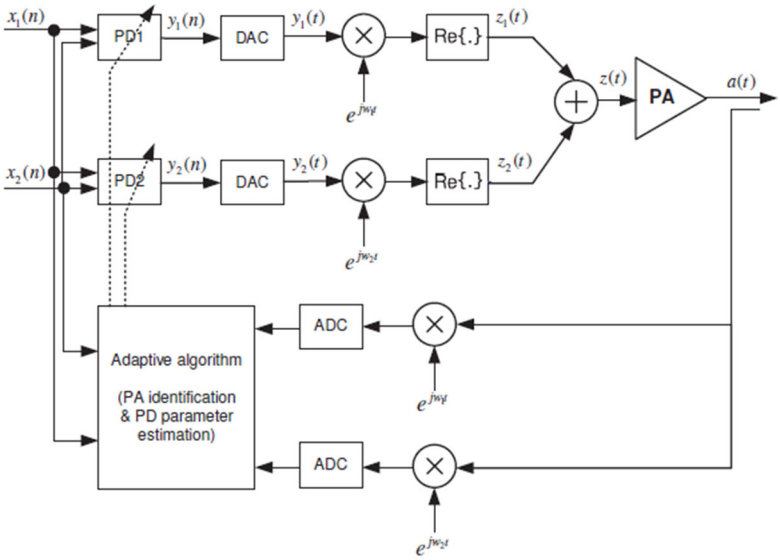

Fig. 3. Proposed PD structure.

One of ordinary skill in the art would have recognized that a combination with Choi combines known prior art elements according to known methods to yield predictable results. Choi

and the other references identified in Table E use known techniques to improve similar devices or methods in the same way. Moreover, a combination with Choi was obvious to try because one of skill in the art would have chosen from a finite number of identified, predictable solutions, with a reasonable expectation of success.

w. Motivation for combining with Bassam ’857

One of ordinary skill in the art would have been motivated to combine Bassam ’857 with any of the other references in Table E. Bassam ’857 discloses an “a system 1000 comprising a digital multi-cell processing pre-compensator 1020 with dual inputs 1010 and dual pre-distorted outputs 1015 cascaded in front of a dual-band transmitter 1030 similar to the one illustrated in FIG. 8 (with components 1035A, 1035B, 1040A, 1040B, 1045A, 1045B, 1050 and 1060 of FIG. 10 corresponding to components 830A, 830B, 840A, 840B, 835A, 835B, 845 and 850 of FIG. 8). The digital multi-cell pre-compensator 1020 uses a matrix of two processing cells, 1025A and 1025B, in order to compensate for the dual-band transmitter's nonlinearities and any intra-band distortions (impairments) between the two RF signals. The digital multi-cell pre-compensator 1020 with dual inputs 1010 and dual outputs 1015 comprises means, for example the processing cells 1025A and 1025B, using the input signals 1010 and output signal 1070 of the dual-band transmitter 1030 to estimate any nonlinearities and distortions (impairments) and identify a proper processing function for each of the two processing cells PC1 1025A and PC2 1025B. After identification, the input signals 1010 are supplied to the two processing cells 1025A and 1025B to generate and adjust the pre-distorted signals 1015. Then the pre-distorted signals 1015 are supplied to the dual-band transmitter 1030. The cascade of the digital compensator 1020 and the dual-band transmitter 1030 exhibits linear behavior.” Bassam ’857 at 6:15-39. *See* Bassam ’857 at Figs. 10-11.

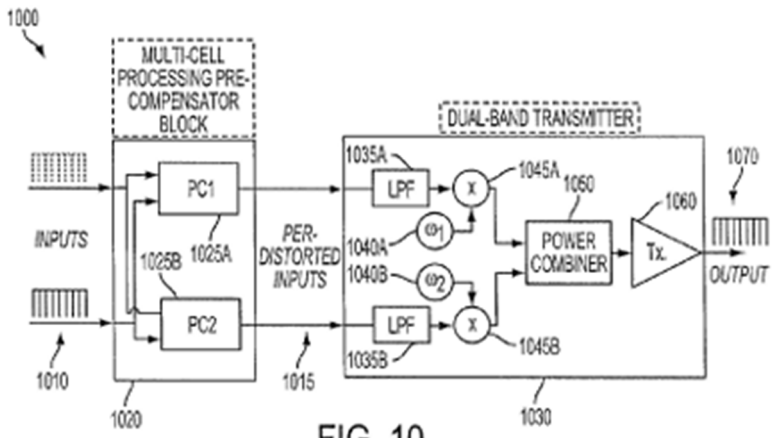

FIG. 10

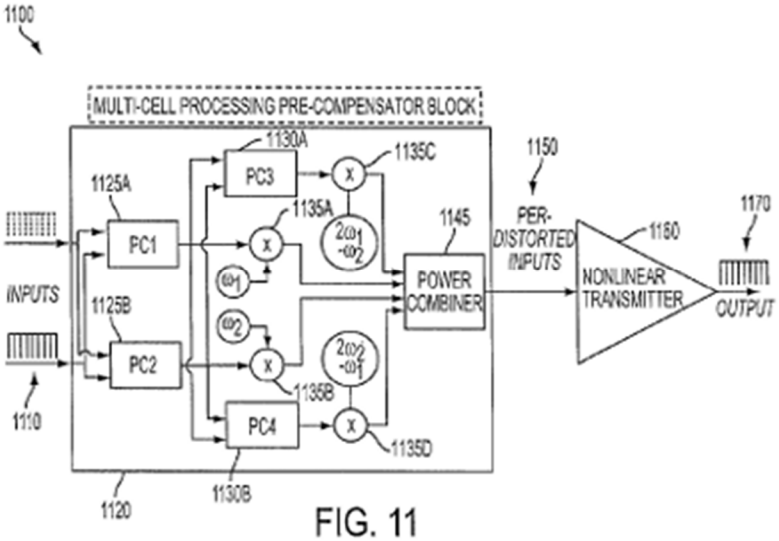

FIG. 11

One of ordinary skill in the art would have recognized that a combination with Bassam ’857 combines known prior art elements according to known methods to yield predictable results. Bassam ’857 and the other references identified in Table E use known techniques to improve similar devices or methods in the same way. Moreover, a combination with Bassam ’857 was obvious to try because one of skill in the art would have chosen from a finite number of identified, predictable solutions, with a reasonable expectation of success.

x. Motivation for combining with Xin

One of ordinary skill in the art would have been motivated to combine Xin with any of the other references in Table E. Xin teaches the "principle structure of a digital predistortion system used e.g. in a transmitter for signal transmission is shown in fig. 1." Xin at [0011]. Xin a "predistorter PD has a first input for receiving input signals and is connected via an output both to an input of a power amplifier PA and to a first input of an predistorter learning device PLD. The power amplifier PA has an output for signal transmission to further devices not depicted in fig. 1 and is connected via said output to a normalization device ND." Xin at [0011]-[0013]. *See* Xin at Fig. 1:

Fig. 1

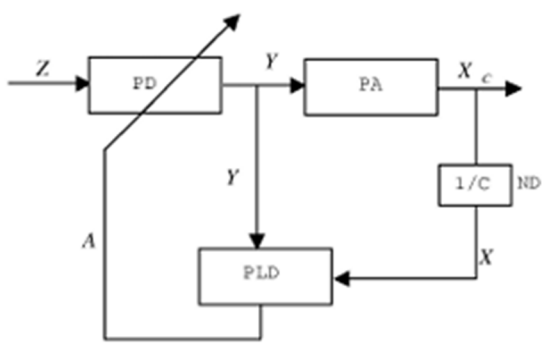

Xin further discloses that the "predistorter learning device PLD uses both the normalized signals X and the predistorted signals Y, i.e. the output and input signals of the power amplifier PA to calculate the inverse characteristic of the power amplifier PA and thus predistortion parameters A. Said predistortion parameters A are sent to the predistorter PD and applied in the predistorter for predistortion of signals Z before the signals are sent to the power amplifier PA in order to compensate the nonlinearities of the power amplifier PA." Xin at [0019].

Consistent with the alleged novelty of the '296 Patent, Xin proposes a linearization technique to improve the efficiency of wireless transmitters by sampling the predistortion module

and compensating for the dynamic (memory effect) associated with the wireless transmitter by updating the coefficients in the predistortion module. *Id*. One of ordinary skill in the art would have recognized that a combination with Xin combines known prior art elements according to known methods to yield predictable results. Xin and the other references identified in Table E use known techniques to improve similar devices or methods in the same way. Moreover, a combination with Xin was obvious to try because one of skill in the art would have chosen from a finite number of identified, predictable solutions, with a reasonable expectation of success.

y. Motivation for combining with Jelonnek '375

One of ordinary skill in the art would have been motivated to combine Jelonnek '375 with any of the other references in Table E. Jelonnek '375 teaches "A power amplifier module (300) is provided, which comprises a power supply unit (304) having an input connector and an output connector, and a power amplifier (303) having an input terminal, wherein the output connector of the power supplying unit (304) is connected to the input terminal of the power amplifier (303), wherein the power supply unit (304) is adapted to generate a variable drain voltage from an undefined stabilized voltage applied to the input connector and supply the variable drain voltage to the output connector." Jelonnek '375 at Abstract. As shown in Fig. 1, A complex digital baseband input signal BBIS arrives via an interpolation device 101 as a signal x(k) both at a device for broadband predistortion 102 of a main branch as also at a device for broadband parameter estimation 103. The device for broadband predistortion 102 is a series circuit with a compensator device 104 or equalizer to compensate for linear distortions, with a D/A converter 105, with a transmit filter TxF 106 causing linear distortions, with a modulator 107 and with the transmit power amplifier 108 connected downstream." Jelonnek '375 at [0030]-[0031].

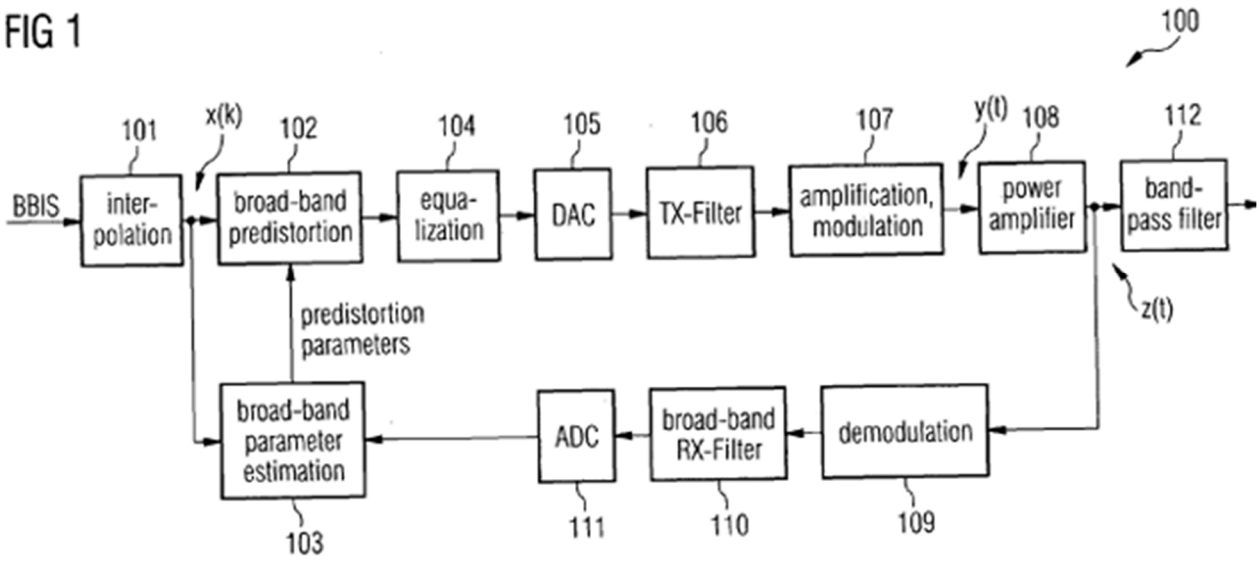

Jelonnek ’375 at Fig. 1.

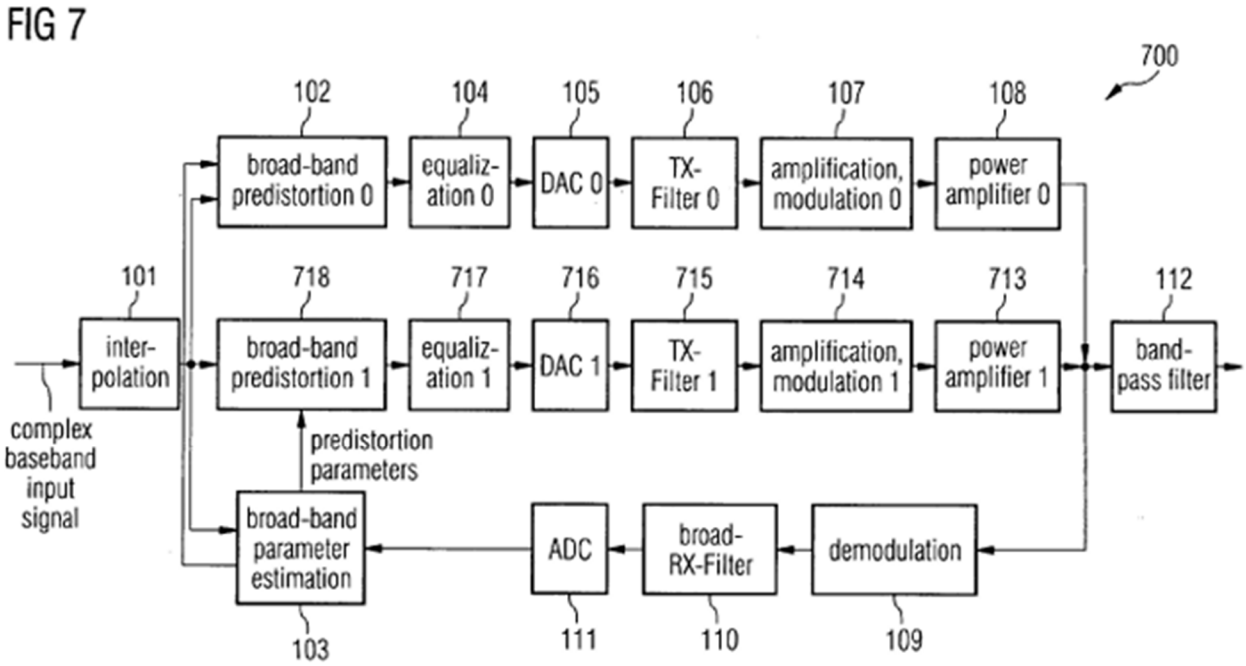

Jelonnek ’375 at Fig. 7.

Consistent with the alleged novelty of the ’296 Patent, Jelonnek ’375 proposes a linearization technique to improve the efficiency of wireless transmitters by sampling the predistortion module and compensating for the dynamic (memory effect) associated with the

wireless transmitter by updating the coefficients in the predistortion module. *Id.* One of ordinary skill in the art would have recognized that a combination with Jelonnek '375 combines known prior art elements according to known methods to yield predictable results. Jelonnek '375 and the other references identified in Table E use known techniques to improve similar devices or methods in the same way. Moreover, a combination with Jelonnek '375 was obvious to try because one of skill in the art would have chosen from a finite number of identified, predictable solutions, with a reasonable expectation of success.

z. Motivation for combining with Kilambi

One of ordinary skill in the art would have been motivated to combine Kilambi with any of the other references in Table E. Kilambi relates to a "multi-band signal is generated by combining two or more input signals separated in frequency. The input signals are combined either before or after predistortion depending on the bandwidth of the multi-band signal. If the bandwidth of the multi-band signal is less than a predetermined bandwidth threshold, the input signals are combined and predistortion is applied to the combined signal to generate the multi-band signal. If the bandwidth of the multi-band signal is greater than the bandwidth threshold, the individual input signals are predistorted and subsequently combined to generate the multi-band signal." Kilambi at Abstract. Kilabmi's linearized dual-band transmitter is illustrated below:

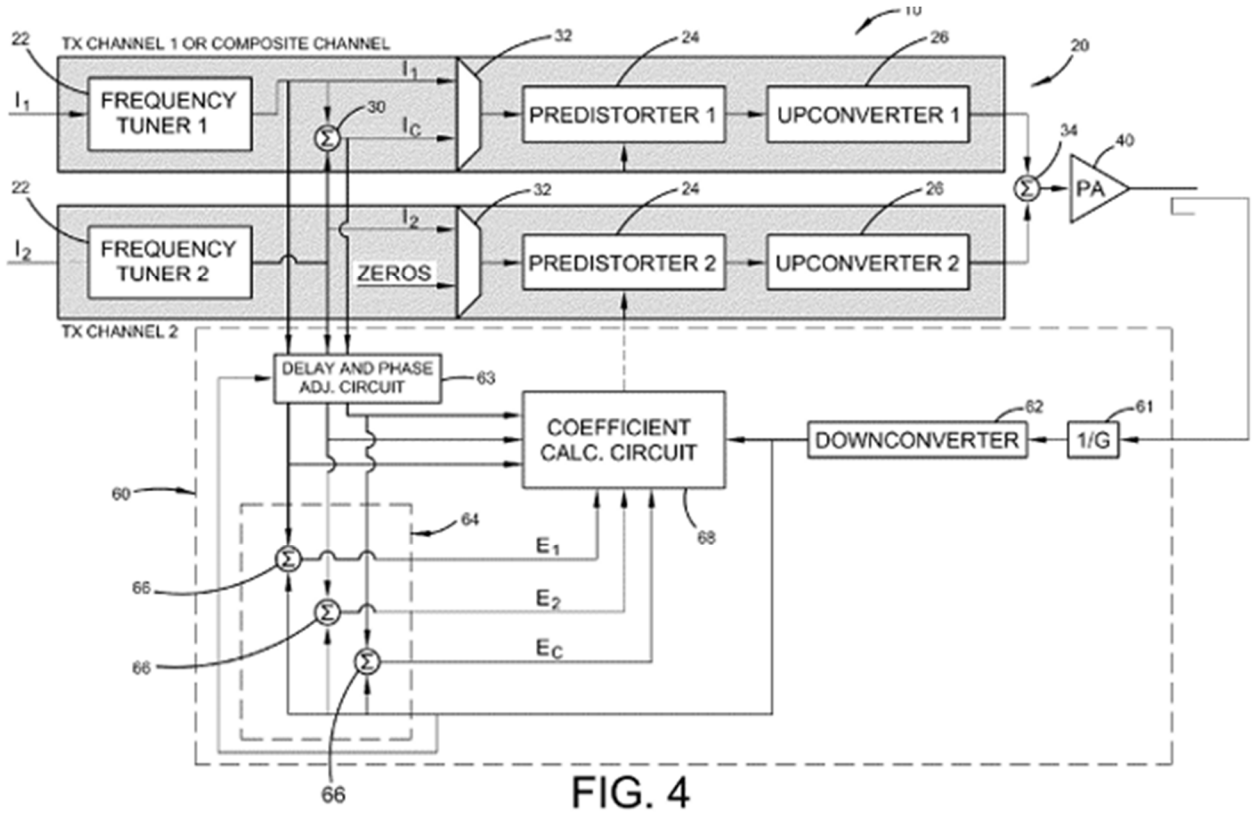

FIG. 4

Kilambi at Fig. 4.

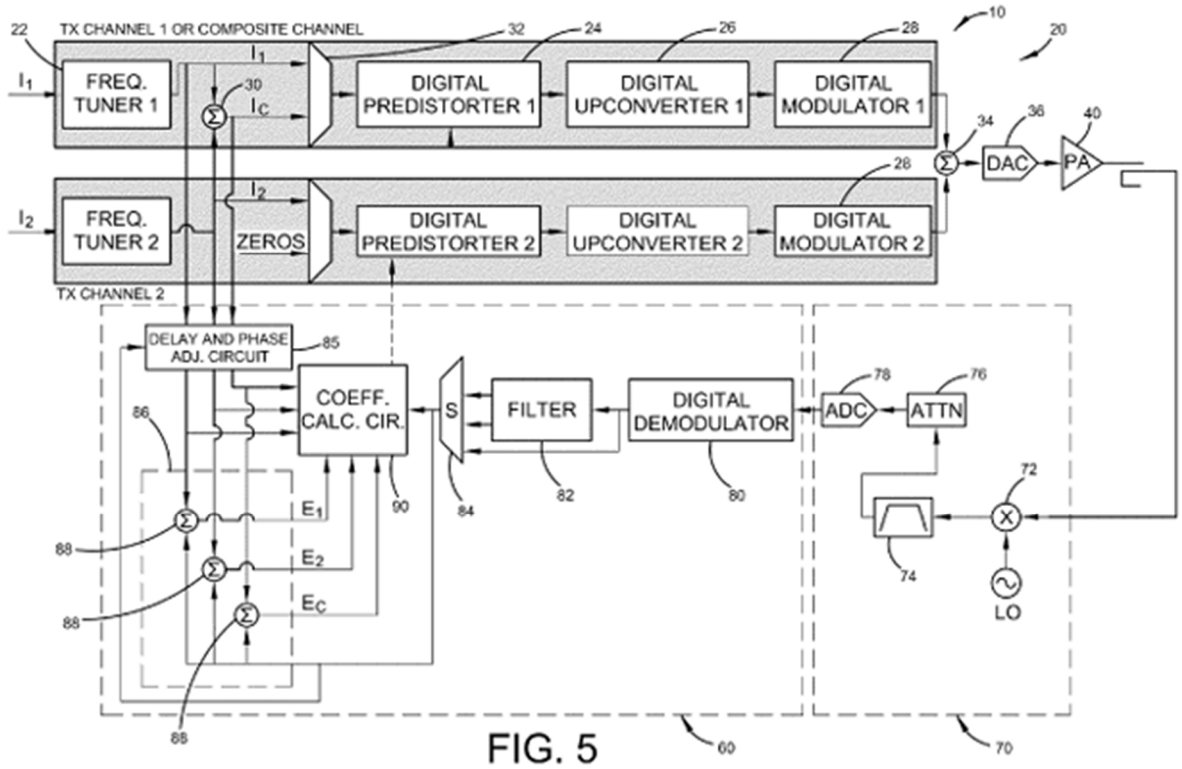

FIG. 5

Kilambi at Fig. 5.

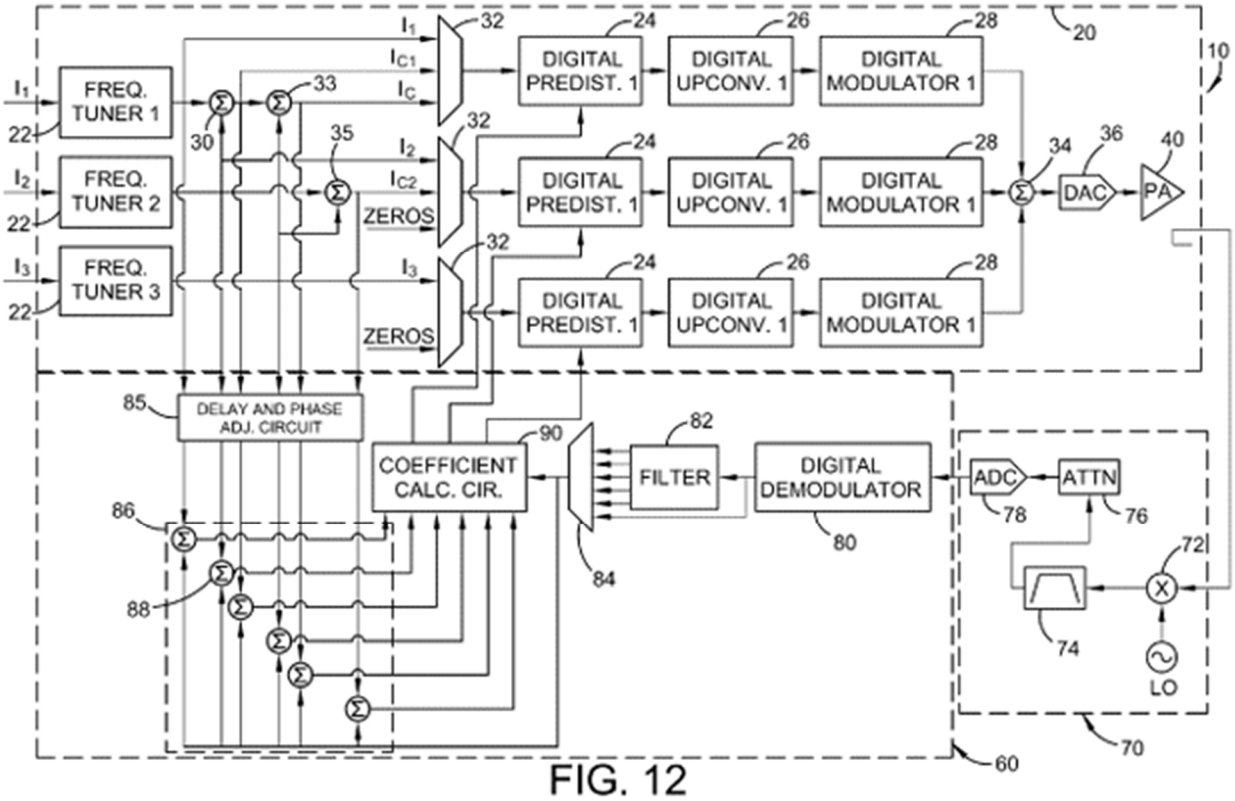

FIG. 12

Kilambi at Fig. 12.

One of ordinary skill in the art would have recognized that a combination with Kilambi combines known prior art elements according to known methods to yield predictable results. Kilambi and the other references identified in Table E use known techniques to improve similar devices or methods in the same way. Moreover, a combination with Kilambi was obvious to try because one of skill in the art would have chosen from a finite number of identified, predictable solutions, with a reasonable expectation of success.

aa. Motivation for combining with Posti

One of ordinary skill in the art would have been motivated to combine Posti with any of the other references in Table E. Posti relates to a "multi frequency carrier transmitter comprises input means for receiving a plurality of different digital signals to be transmitted. The different

signals are to be transmitted on different carrier frequencies. Amplifier means receive a composite signal comprising the different signals at the respective carrier frequencies and amplify the composite signal. Predistortion means predistort the plurality of digital signals prior to amplification of the composite signal by the amplification means. The predistortion provided by the predistortion means is subsequently altered in dependence on the difference between the input signals and the output at the amplifier means." Posti at Abstract. As depicted in Fig. 4, Posti discloses a base station comprising "N channel encoders 104 where N is the number of different frequencies on which the base station 100 will transmit signals." Posti at 4:35-46.

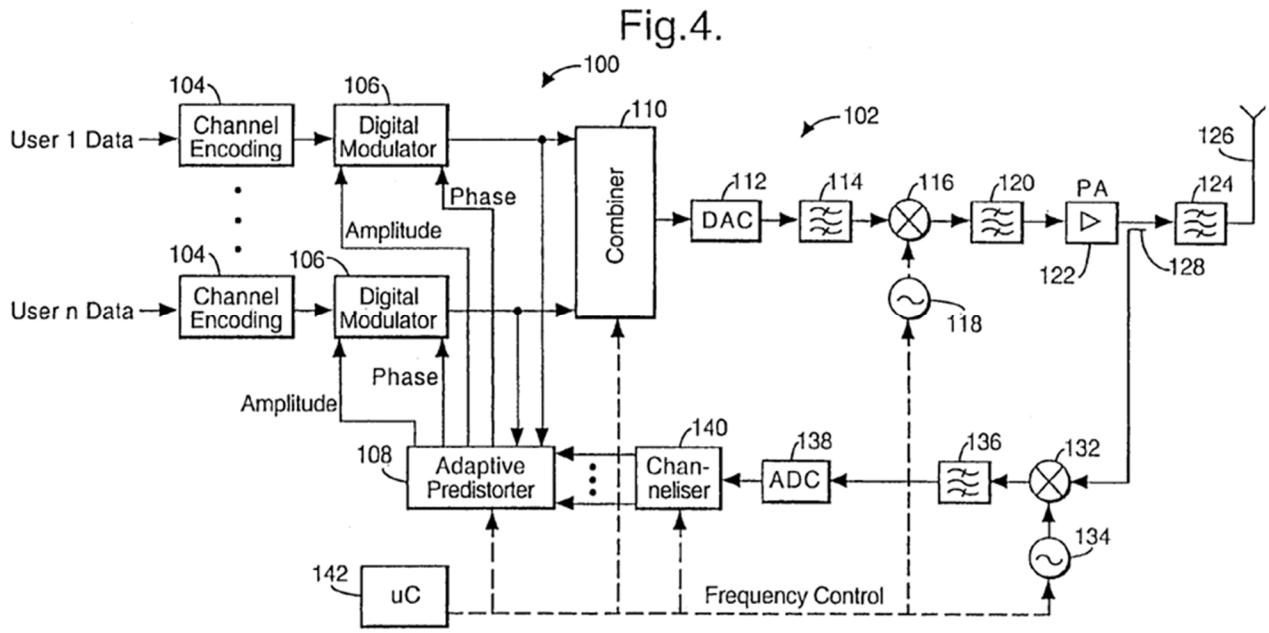

Posti at Fig. 4.

One of ordinary skill in the art would have recognized that a combination with Posti combines known prior art elements according to known methods to yield predictable results. Posti and the other references identified in Table E use known techniques to improve similar devices or methods in the same way. Moreover, a combination with Posti was obvious to try because one of skill in the art would have chosen from a finite number of identified, predictable solutions, with a

reasonable expectation of success.

III. PATENT RULE 3-3(C): CLAIM CHARTS IDENTIFYING WHERE THE LIMITATIONS OF THE ASSERTED CLAIMS ARE FOUND IN THE PRIOR ART

Attached hereto and incorporated by reference are limitation-by-limitation claim charts demonstrating where specifically, in each anticipatory prior art item, each limitation of the Asserted Claims of the Asserted Patent is found.

As noted above, these claim charts are based on Defendants' understanding of the claim constructions applied by Plaintiff, even though Defendants do not necessarily agree with those constructions, and reserves the right to dispute them. To the extent any limitation is deemed not to be met exactly by an item of prior art, Defendants contend that the difference would have been obvious to a person of ordinary skill in the art and within the knowledge of one skilled in the art at the time of the alleged invention, so that the claimed invention would have been obvious both in light of that prior art item alone and/or in combination with other prior art.

As a general matter, all portions of each prior art item are relied upon to support the disclosure of each patent claim limitation, as all portions provide general support. Supporting citations are nevertheless provided, but do not necessarily represent every location where a particular claim term may be found in the prior art item. Defendants reserve the right to rely on additional, or different, portions of the prior art items other than those specifically cited in these claim charts, and to supplement and/or amend these charts.

Subject to the above discussion, *see* attached claims charts for the Asserted Claims of the Asserted Patents:

- The '345 Patent: Exhibits A-1 to A-8
- The '561 Patent: Exhibits B-1 to B-7
- The '857 Patent: Exhibits C-1 to C-11

- The ’204 Patent: Exhibits D-1 to D-27
- The ’296 Patent: Exhibits E-1 to E-27

IV. PATENT RULE 3-3(D): INVALIDITY BASED ON INDEFINITENESS UNDER 35 U.S.C. §112 ¶ 2 OR ENABLEMENT OR WRITTEN DESCRIPTION UNDER 35 U.S.C. § 112 ¶ 1

Pursuant to P.R. 3-3(d), Defendants contend that certain claims of the Asserted Patents are invalid under 35 U.S.C. § 112 because: (1) the claims are indefinite; (2) the claims are not enabled; and/or (3) the claims lack adequate written description. Defendants’ contentions under 35 U.S.C. § 112 are made in the alternative, and do not constitute, and should not be interpreted as, admissions regarding the construction or scope of the claims of the Asserted Patents, or that any of the claims of the Asserted Patents are not anticipated or rendered obvious by any prior art.

The written description and enablement requirements are analyzed by comparing the claims with the disclosure in the specification. If the claimed invention does not appear in the specification, the claim fails regardless of whether one of skill in the art could make or use the claimed invention. *See, e.g., Ariad Pharms., Inc. v. Eli Lilly & Co*., 598 F.3d 1336, 1348 (Fed. Cir. 2010). To satisfy the enablement requirement, a patentee must “describe the manner and process of making and using the invention so as to enable a person of skill in the art to make and use the full scope of the invention without undue experimentation.” *See, e.g., LizardTech, Inc. v. Earth Res. Mapping, Inc.*, 424 F.3d 1336, 1344-45 (Fed. Cir. 2005). To satisfy the written description requirement, the patentee must convey to those skilled in the art that, as of the filing date, the applicant was in possession of the invention, and demonstrate that possession by disclosing the invention in the specification. *See, e.g., Ariad*, 598 F.3d at 1352.

A patent must also be precise enough to afford clear notice to what is claimed. *Nautilus, Inc. v. Biosig Instruments, Inc*., 134 S. Ct. 2120, 2124 (2014). A patent is invalid for indefiniteness

if its claims, read in light of the specification delineating the patent, and the prosecution history, fail to inform, with reasonable certainty, those skilled in the art about the scope of the invention. *Id*. The standard for assessing if a patent claim is sufficiently definite to satisfy the statutory requirement is whether "one skilled in the art would understand the bounds of the claim when read in light of the specification." *See Novo Indus., L.P. v. Micro Molds Corp*., 350 F.3d 1348, 1358 (Fed. Cir. 2003). Claims that depend from claims that are invalid for lack of enablement or written description support inherit the deficiencies of the claims from which they depend and are also invalid.

A claim term can be indefinite based on multiple grounds ranging from the substantive concerns to unresolvable drafting errors, each of which can be fatal to the validity of the claims as a matter of law. "[I]t cannot be sufficient that a court can ascribe some meaning to a patent's claim; the definiteness inquiry trains on the understanding of a skilled artisan at the time of the patent application, not that of a court viewing matters post hoc." *Nautilus,* 134 S. Ct. at 2130. The definiteness inquiry necessarily demands that the "patent and prosecution history disclose a single known approach or establish that, where multiple known approaches exist, a person of ordinary skill in the art would know which approach to select." *Id*. Claims that depend from claims that are indefinite inherit the indefiniteness of the claims from which they depend and are also indefinite.

Defendants provide below an identification of terms in Asserted Claims that render the Asserted Claims, at least as apparently construed by Smart RF in its Infringement Contentions, invalid pursuant to 35 U.S.C. § 112. However, as Plaintiff's Infringement Contentions fail to provide sufficient detail to fully understand its proposed application of the Asserted Claims, Defendants reserve the right to assert additional grounds for invalidity under 35 U.S.C. § 112 in

response to Plaintiff's claim interpretations and infringement arguments. Further, to the extent that Smart RF contends that the prior art references identified above would not enable a person of ordinary skill to make or use the elements of the Asserted Claims against which they are cited, or to the extent Smart RF contends that the Asserted Claims cover something different from what Defendants understands them to cover, the Asserted Claims do not comply with the enablement, written description, and/or definiteness requirements of 35 U.S.C. § 112. Because compliance with the requirements of 35 U.S.C. § 112 depends upon the construction of particular claim phrases—and no claim construction positions have been exchanged, no claim construction order issued in this case, and no expert discovery undertaken—Defendants' positions on written description, enablement, and/or indefiniteness are necessarily preliminary at this early stage of the case. A more detailed basis for Defendants' indefiniteness, enablement, and/or written description defenses will be set forth in Defendants' claim construction briefing and/or expert reports on invalidity and/or in Motion[s] for Summary Judgment of Invalidity, to be served in accordance with the Court's Docket Control Order. Defendants have not taken any depositions related to these issues and discovery is on-going. Defendants specifically reserve the right to amend and/or supplement these contentions based on further developments in the case in accordance with the Court's Rules or as otherwise authorized by the Court.

***IPXL* Indefiniteness:** The Federal Circuit has repeatedly held that apparatus claims that contain method claim limitations are indefinite because it is impossible to determine when direct infringement occurs. *See, e.g., Rembrandt Data Techs., LP v. AOL, LLC*, 641 F.3d 1331, 1339-40 (Fed. Cir. 2011) (an independent claim that recited both an apparatus and a method of using that apparatus was indefinite, as was its dependent claims); *IPXL Holdings v. Amazon.com*, 430 F.3d 1377, 1384 (Fed. Cir. 2005); *In re Katz Interactive Call Processing Patent Litigation*, 639 F.3d

1303, 1318 (Fed. Cir. 2011) (mixed claims "create confusion as to when direct infringement occurs because they are directed both to systems and to actions performed by" users). Claim terms that lack antecedent basis are indefinite. *See, e.g., Allen Eng'g Corp. v. Bartell Indus., Inc.*, 299 F.3d 1336, 1348-49 (Fed. Cir. 2002) (claim ending in the middle of a claim limitation was indefinite because it was "impossible to discern the scope of such a truncated limitation"). Furthermore, means-plus-function claims may be invalid as indefinite where the specification fails to disclose adequate corresponding structure linked to the recited functionality. *Noah Sys., Inc. v. Intuit Inc.*, 675 F.3d 1302, 1311-12 (Fed. Cir. 2012).

Means-Plus-Function Indefiniteness: Defendants are further investigating whether terms are governed by 35 U.S.C. § 112(6), now 35 U.S.C. § 112(f), and whether they lack corresponding structure associated with the claimed function, rendering them indefinite. In particular, computer-implemented claim limitations invoking § 112(f) that do not provide corresponding and adequate algorithmic structure in the specification are invalid as indefinite. *See, e.g.*, *Advanced Ground*, 830 F.3d at 1346–50 (affirming final judgment entered at claim construction and holding claims invalid as indefinite because there was no algorithm for performing the claimed "symbol generator" function); *Media Rights Techs. v. Capital One Fin. Corp.,* 800 F.3d 1366, 1371–75 (Fed. Cir. 2015) (affirming judgment on the pleadings because there was no algorithm for "compliance mechanism"); *Twin Peaks Software, Inc. v. IBM Corp.,* 690 F. App'x 656, 661–65 (Fed. Cir. 2017) (affirming invalidity judgment entered at claim construction because there was no algorithm for "mechanism for managing said component"); *Huawei Techs. Co. Ltd. v. T-Mobile US, Inc.*, 2017 WL 2691227, *36–37 (E.D. Tex. June 21, 2017) (granting invalidity judgment at claim construction because there was no algorithm for "selection module" and "key derivation module"); *Synachronoss Techs., Inc. v. Dropbox, Inc.*, 2017 WL 6059302, at *5–9 (N.D. Cal. Dec.

7, 2017) (granting invalidity judgment at claim construction because there was no algorithm for "user identifier module," "authentication module," and "user login authenticator"); *Verint Sys. Inc. v. Red Box Recorders Ltd.*, 166 F. Supp. 3d 364, 379–84 (S.D.N.Y. 2016) (granting invalidity judgment at claim construction because there was no algorithm for "computer application" and "monitoring device"); *Farstone Tech. v. Apple Inc.*, 2015 WL 5898273, at *3–5 (C.D. Cal. Oct. 8, 2015) (granting invalidity judgment at claim construction because there was no algorithm for "backup/recovery module").

A. Invalidity under § 112, ¶ 2: Indefiniteness

Based on Defendants' investigation to date and Plaintiff's infringement contentions, the following terms are indefinite:

1. The '345 Patent

The Asserted Claims of the '345 Patent are invalid as indefinite under 35 U.S.C. § 112. Numerous terms and limitations in the Asserted Claims of the '345 Patent, even when read in light of the specification and prosecution history, fail to inform with reasonable certainty one of ordinary skill in the art about the scope of the invention, for example:

- "an I/Q modulator" (claim 1[15])
- "a distorting generator" (claim 1)
- "complex envelop of the RF amplified output signal" (claim 1)
- "complex envelop of the first feedback signal" (claim 1)
- "complex envelop of the second feedback signal" (claim 1)

[15] Reference to any particular claim is for convenience and not intended to limit the scope of Defendants' arguments. The Section 112 arguments identified herein apply equally to all instances of the applicable claim language.

- "a predistortion function" (claim 1)
- "a control module" (claim 7)
- "a third digital receiver" (claim 7)
- "an adequate delay between the first feedback signal and the second feedback signal" (claim 11)

Defendants further contend that the corresponding claims are invalid under § 112, ¶ 6 for violating the prohibition against pure "functional claiming" of what otherwise purport to be structural claim limitations. *Halliburton Energy Servs. v. M-I LLC*, 514 F.3d 1244, 1246 (Fed. Cir. 2008) (citing *In re Swinehart*, 439 F.2d 210, 212 (1971)). For instance, based upon Defendants' investigation to date, the following claim limitations are invalid as indefinite at least because Defendants have not yet identified an algorithm or other corresponding structure for performing the following claim limitations/functions.

- "a first digital receiver producing a first feedback signal in response to the RF predistorted signal from said I/Q modulator" (claim 5)
- "a second digital receiver producing a second feedback signal in response to the RF amplified output signal from the power amplifier" (claim 5)
- "said control module being so configured as to model the power amplifier in response to the first and second feedback signals and to update said amplitude and phase look-up tables of said distorting generator in response to a dynamic modeling of the power amplifier" (claim 5)
- "said look-up tables of said distorting generator are indexed by an envelope detector that detects the envelope of the signal to be transmitted before predistortion" (claim 5)

- "a third digital receiver that down-converts the signal to be transmitted to baseband" (claim 7)
- "wherein the data from said third digital receiver is supplied to said control module that indexes said distorting generator accordingly" (claim 8)

Further to the above, many of the Asserted Claims are method claims reciting the same or similar functional limitations that the asserted apparatus claims recite. Accordingly, if the apparatus claims invoke § 112(6), the method claims also invoke § 112(6). *See Cummins-Allison Corp. v. Glory Ltd.*, No. 02 C 7008, 2003 WL 355470, at *13–14 (N.D. Ill. Feb. 12, 2003) (holding that § 112(6) applied to a method for "processing currency" that recited the function of "automatically denominating" currency but did not specify the way that function was performed), *adopted*, No. CIV.A. 02 C 7008, 2003 WL 22125212 (N.D. Ill. Sept. 5, 2003). The fact that certain claims claim methods rather than apparatuses does not change the requirement of an algorithm for performing the recited functions. When distinguishing apparatus and method claims, courts have long warned against "exalt[ing] form over substance" where "the claim is really to the . . . series of functions itself." *Fed. Home Loan Mortgage Corp. v. Graff/Ross Holdings LLP*, 893 F. Supp. 2d 28, 36 (D.D.C. 2012) ("The equivalence of the [method and apparatus claims] is readily apparent and the only real difference between the claims is the form in which they were drafted.") (citation omitted).

2. The '561 Patent

The Asserted Claims of the '561 Patent are invalid as indefinite under 35 U.S.C. § 112. Numerous terms and limitations in the Asserted Claims of the '561 Patent, even when read in light of the specification and prosecution history, fail to inform with reasonable certainty one of ordinary skill in the art about the scope of the invention, for example:

- "a behavioral model" (claim 1)
- "a first module" (claim 1)
- "a second module" (claim 1)
- "a nonlinear finite impulse response-based memory effect system" (claim 4)
- "a dynamic weak nonlinear model" (claim 5)
- "a static strong nonlinear model" (claim 5)
- "a finite impulse response filter-based multi-branch nonlinear system" (claim 6)
- "a dynamic nonlinear predistorter module" (claims 7, 11)
- "a static nonlinear predistorter module" (claims 7, 11, 15, 19)
- "a finite impulse response-based memory effect predistorter" (claims 8, 12, 16, 20)
- "a dynamic weak nonlinear predistorter" (claims 9, 13, 17, 21)
- "a static strong nonlinear predistorter" (claims 9, 13, 17, 21)
- "a finite impulse response filter-based multi-branch nonlinear structure" (claim 10)
- "a finite impulse response filter-based multi-branch nonlinear structure" (claims 14, 18, 22)
- "a dynamic nonlinear first order predistorter module" (claim 15, 19)

In addition, the Asserted Claims of the '561 Patent are invalid as indefinite under 35 U.S.C. § 112 for attempting to claim both a system and a method for using that system such that, even when read in light of the specification and prosecution history, the claims fail to inform with reasonable certainty one of ordinary skill in the art about the scope of the invention. *IPXL Holdings, LLC*, 430 F.3d at 1384. A claim that combines two separate statutory classes of invention do not satisfy the requirements of section 112, paragraph 2 because such claim fails to inform the manufacturer or seller of the claimed apparatus "whether it might also be liable for contributory

infringement because a buyer or user of the apparatus later performs the claimed method of using the apparatus." *Id*. For example, claim 1 recites both a system and a method for using that system:

> *1. A behavioral model of a nonlinear dynamic system, the model comprising:*
>
> > *a first module characterizing dynamic nonlinear characteristics of the system, wherein the first module includes an input and an output; and*
> >
> > *a second module characterizing static nonlinear characteristics of the nonlinear system, wherein the second module includes an input and an output;*
> >
> > *wherein the first module is coupled to the second module.*

'561 Patent, claim 1. Thus, it is unclear whether infringement of claim 1 occurs when one creates a device that is capable of characterizing dynamic and static nonlinear characteristics of a nonlinear system, and/or whether infringement occurs when such a device is actually used to characterize the dynamic nonlinear and static nonlinear characteristics of a nonlinear system. Because claim 1 recites both a system and a method for operating that system, "it does not apprise a person of ordinary skill in the art of its scope, and it is invalid under section 112, paragraph 2." *IPXL Holdings, LLC*, 430 F.3d at 1384. Claims 2–6 of the '561 Patent depend from claim 1 and thus similarly fail inform one of ordinary skill in the art of the metes and bounds of the protection involved. *Id*.

3. The '857 Patent

The Asserted Claims of the '857 Patent are invalid as indefinite under 35 U.S.C. § 112. Numerous terms and limitations in the Asserted Claims of the '857 Patent, even when read in light of the specification and prosecution history, fail to inform with reasonable certainty one of ordinary skill in the art about the scope of the invention, for example:

- "a matrix of pre-processing cells" (claim 1)
- "nonlinear processing blocks" (claim 1)

- "linear processing blocks" (claim 1)

All Asserted Claims of the '857 Patent recite (or require by dependency) one or more of these terms, which are not adequately defined in the patent specification, and whose lack of reasonably ascertainable scope is compounded by Smart RF's overbroad and vague infringement contentions. For instance, "nonlinear processing blocks" and "linear processing blocks" are indefinite as there is no consistent, objective guidance in the specification as to how "nonlinear processing blocks compensat[e] for multiple-input multiple-output nonlinear distortions" and how "linear processing blocks compensat[e] for the multiple-input multiple-output linear distortions," respectively. The Asserted Claims are subject to multiple interpretations as to what was meant by "nonlinear processing blocks," "linear processing blocks," and "a matrix of pre-processing cells." In particular, a person of ordinary skill in the art, looking to the specification and prosecution history, could not with reasonable certainty determine the scope of the claim. Thus, all Asserted Claims of the '857 Patent fail to distinctly claim the subject matter that the applicant regards as his invention, and are invalid under the second paragraph of § 112. *See Nautilus*, 572 U.S. at 908–912.

Defendants further contend that the corresponding claims are invalid under § 112, ¶ 6 for violating the prohibition against pure "functional claiming" of what otherwise purport to be structural claim limitations. *Halliburton Energy Servs.*, 514 F.3d at 1246 (citing *In re Swinehart*, 439 F.2d at 212). For instance, based upon Defendants' investigation to date, the following claim limitations are invalid as indefinite at least because Defendants have not yet identified an algorithm or other corresponding structure for performing the following claim limitations/functions.

- "a matrix of pre-processing cells for generating a pre-distorted multiple-input signal from the received multiple input signal" (claim 8)

- "wherein the pre-processing cells are configured so as to estimate impairments generated by the multiple-input and multiple-output transmitter and adjust the pre-distorted multiple-input signal to compensate for the estimated impairments" (claim 8)
- "nonlinear processing blocks compensating for multiple-input multiple-nonlinear distortions and an effect of interferences between signal paths of the multiple input signal and signal paths of the multiple-output signal" (claim 8)
- "linear processing compensating for multiple-input multiple-output linear distortions and the effect of interferences between the signal paths of the multiple-input signal and the signal paths of the multiple-output signal" (claim 8)
- "wherein the adjustment of the predistorted multiple-input signal introduces linear and nonlinear distortions on each signal path of the multiple-input signal" (claim 9)
- "wherein the adjustment of the predistorted multiple-input signal further introduces interference between each signal path of the multiple-input signal." (claim 10)
- "estimate a nonlinear function for each nonlinear processing block" (claim 11)
- "estimate a linear function for each linear processing block" (claim 12)
- "each of the pre-processing cells of the matrix models a behavior of a multi-input multi-output system" (claim 14)

Further to the above, many of the Asserted Claims are method claims reciting the same or similar functional limitations that the asserted apparatus claims recite. Accordingly, if the apparatus claims invoke § 112(6), the method claims also invoke § 112(6). *See Cummins-Allison Corp.*, 2003 WL 355470, at *13–14 (holding that § 112(6) applied to a method for "processing currency" that recited the function of "automatically denominating" currency but did not specify

the way that function was performed), *adopted*, 2003 WL 22125212. The fact that certain claims claim methods rather than apparatuses does not change the requirement of an algorithm for performing the recited functions. When distinguishing apparatus and method claims, courts have long warned against "exalt[ing] form over substance" where "the claim is really to the . . . series of functions itself." *Fed. Home Loan Mortgage Corp.*, 893 F. Supp. 2d at 36 ("The equivalence of the [method and apparatus claims] is readily apparent and the only real difference between the claims is the form in which they were drafted.") (citation omitted).

4. The '204 Patent

The Asserted Claims of the '204 Patent are invalid as indefinite under 35 U.S.C. § 112. Numerous terms and limitations in the Asserted Claims of the '204 Patent, even when read in light of the specification and prosecution history, fail to inform with reasonable certainty one of ordinary skill in the art about the scope of the invention, for example:

- "concurrent digital multi-band predistortion block" (claim 1)
- "signal observation feedback loop" (claim 1)
- "at a subsampling frequency lower than twice the highest signal frequency in the amplified concurrent multi-band signals" (claim 1)
- "digital baseband signal predistorter blocks" (claims 2, 3)
- "analyzing and modeling stage" (claim 3)
- "perform time alignment of complex baseband signals" (claim 5)
- "perform the reconstruction of the complex baseband signals" (claim 5)
- "down-convert samples of the RF signals at said output of the power amplifier" (claim 6)
- "extract from said down-converted samples a baseband equivalent for all frequency

channels" (claim 6)

- "signal down conversion block" (claim 7)
- "a single subsampling-based receiver to down-covert samples output from a concurrent multi-band transmitter" (claim 8)
- "track and hold (T&H) block" (claim 9)
- "wherein the subsampling frequency is greater than two times a signal bandwidth of the modulated concurrent multi-band signals" (claims 10, 13)
- "wherein the subsampling frequency fs is in a range $2fu/n \leqq fs \leqq 2h/(n-1)$where $1 \leqq n \leqq |fu/B|$, and where B is a bandwidth of the amplified concurrent multi-band signals, and fL fu, are respective lower and upper frequencies of the bandwidth, and n is an integer" (claims 11, 15)
- "subsampling of the amplified concurrent multi-band signals at a subsampling frequency lower than twice a highest signal frequency in the amplified multi-band signal" (claim 12)
- "controlling the predistorting by the subsampled concurrent multi-band signal" (claim 12)
- "the subsampling frequency is chosen to avoiding aliasing between replicas" (claim 14)

Moreover, the lack of reasonable certainty surrounding each of the "block," "loop," or "stage" terms identified above is further compounded by Smart RF's overbroad and vague infringement contentions. For instance, there is no consistent, objective guidance in the specification as to how a "digital multi-band predistortion block" may "effect predistortion of the modulated concurrent multi-band signals to compensate for a non-linearity of the power

amplifier;" or how the "signal observation feedback loop" may "effect concurrent sampling of the amplified concurrent multiband signals …;" or how an "analyzing and modeling stage" may "control[] said digital multi-band predistortion block." The Asserted Claims are subject to multiple interpretations as to what was meant by these terms, and a person of ordinary skill in the art, looking to the specification and prosecution history, could not with reasonable certainty determine the scope of the claim. Thus, all Asserted Claims of the '204 Patent fail to distinctly claim the subject matter that the applicant regards as his invention, and are invalid under the second paragraph of § 112. *See Nautilus*, 572 U.S. at 908–912.

Defendants further contend that the corresponding claims are invalid under § 112, ¶ 6 for violating the prohibition against pure "functional claiming" of what otherwise purport to be structural claim limitations. *Halliburton Energy Servs.*, 514 F.3d at 1246 (citing *In re Swinehart*, 439 F.2d at 212). Based upon Defendants' investigation to date, the following claim limitations are invalid as indefinite under § 112, ¶ 6 at least because Defendants have not yet identified an algorithm or other corresponding structure for performing the following claim limitations/functions.

- "a concurrent digital multi-band predistortion block configured to effect predistortion of the modulated concurrent multi-band signals to compensate for a non-linearity of the power amplifier" (claim 1)
- "signal observation feedback loop configured to effect concurrent sampling of the amplified concurrent multi-band signals at a subsampling frequency lower than twice a highest signal frequency in the amplified concurrent multi-band signals" (claim 1)
- "digital baseband signal predistorter blocks" (claims 2, 3)

- "analyzing and modeling stage … for receiving the respective predistorted signals and for using said received predistorted signals in controlling said digital multi-band predistortion block" (claim 3)
- "signal down conversion block" (claim 7)
- "track and hold (T&H) block" (claim 9)

Further to the above, many of the Asserted Claims are method claims reciting the same or similar functional limitations that the asserted apparatus claims recite. Accordingly, if the apparatus claims invoke § 112(6), the method claims also invoke § 112(6). *See Cummins-Allison Corp.*, No. 02 C 7008, 2003 WL 355470, at *13–14 (holding that § 112(6) applied to a method for "processing currency" that recited the function of "automatically denominating" currency but did not specify the way that function was performed), *adopted*, No. CIV.A. 02 C 7008, 2003 WL 22125212. The fact that certain claims claim methods rather than apparatuses does not change the requirement of an algorithm for performing the recited functions. When distinguishing apparatus and method claims, courts have long warned against "exalt[ing] form over substance" where "the claim is really to the . . . series of functions itself." *Fed. Home Loan Mortgage Corp.*, 893 F. Supp. 2d at 36 ("The equivalence of the [method and apparatus claims] is readily apparent and the only real difference between the claims is the form in which they were drafted.") (citation omitted).

5. The '296 Patent

The Asserted Claims of the '296 Patent are invalid as indefinite under 35 U.S.C. § 112. Numerous terms and limitations in the Asserted Claims of the '296 Patent, even when read in light of the specification and prosecution history, fail to inform with reasonable certainty one of ordinary skill in the art about the scope of the invention, for example:

- "digital signal predisorter block" (claims 1, 10)

- "digital baseband signal predistorters" (claims 1, 10)
- "power amplifier block" (claims 1, 10)
- "analyzing and modelling stage" (claims 1, 10)
- "a plurality of the digital baseband signal predistorters" (claim 2)
- "signal observation feedback loop" (claim 2)
- "perform time alignment of complex baseband signals from sampling said first feedback signals" (claim 5)
- "perform reconstruction of the complex baseband signals from said sampling" (claim 5)
- "said first feed back signals corresponding to a baseband equivalent for all frequency channels and wherein the baseband equivalent signals being extracted from down-converted samples of RF signals output from said power amplifier block" (claim 6)
- "signal down conversion block" (claim 7)
- "a single subsampling-based receiver to down-convert samples output from said power amplifier block" (claim 8)
- "track and hold (T&H) block" (claim 9)

Moreover, the lack of reasonable certainty surrounding each of the "block," "loop," or "stage" terms identified above is further compounded by Smart RF's overbroad and vague infringement contentions. For instance, there is no consistent, objective guidance in the specification as to how a "digital signal predistorter block" may "effect[] predistortion of concurrent input signals to output concurrent predistorted signals;" or how "an analyzing and modeling stage" may "model a nonlinearity in the power amplifier [and the] digital baseband

signal predistorters are updated by the analyzing and modeling stage." The Asserted Claims are subject to multiple interpretations as to what was meant by these terms, and a person of ordinary skill in the art, looking to the specification and prosecution history, could not with reasonable certainty determine the scope of the claim. Thus, all Asserted Claims of the '296 Patent fail to distinctly claim the subject matter that the applicant regards as his invention, and are invalid under the second paragraph of § 112. *See Nautilus*, 572 U.S. at 908–912.

Defendants further contend that the corresponding claims are invalid under § 112, ¶ 6 for violating the prohibition against pure "functional claiming" of what otherwise purport to be structural claim limitations. *Halliburton Energy Servs.*, 514 F.3d at 1246 (citing *In re Swinehart*, 439 F.2d at 212). Based upon Defendants' investigation to date, the following claim limitations are invalid as indefinite under § 112, ¶ 6 at least because Defendants have not yet identified an algorithm or other corresponding structure for performing the following claim limitations/functions.

- "digital signal predisorter block including digital baseband signal predistorters effecting predistortion of concurrent input signals to output concurrent predistorted signals" (claim 1)
- "power amplifier block connected to amplify the predistorted signals" (claim 1)
- "analyzing and modelling stage receiving first feedback signals taken from an output of the power amplifier, and second feedback signals taken concurrently from the concurrent predistorted signals and using the first feedback and the second feedback signals in the analyzing and modelling stage to model a nonlinearity in the power amplifier, wherein the digital baseband signal predistorters are updated by the analyzing and modelling stage" (claim 1)

- "signal observation feedback loop for generating said first feedback signals" (claim 2)
- "signal down conversion block" (claim 7)
- "track and hold (T&H) block" (claim 9)

Further to the above, many of the Asserted Claims are method claims reciting the same or similar functional limitations that the asserted apparatus claims recite. Accordingly, if the apparatus claims invoke § 112(6), the method claims also invoke § 112(6). *See Cummins-Allison Corp.*, No. 02 C 7008, 2003 WL 355470, at *13–14 (holding that § 112(6) applied to a method for "processing currency" that recited the function of "automatically denominating" currency but did not specify the way that function was performed), *adopted*, No. CIV.A. 02 C 7008, 2003 WL 22125212. The fact that certain claims claim methods rather than apparatuses does not change the requirement of an algorithm for performing the recited functions. When distinguishing apparatus and method claims, courts have long warned against "exalt[ing] form over substance" where "the claim is really to the . . . series of functions itself." *Fed. Home Loan Mortgage Corp.*, 893 F. Supp. 2d at 36 ("The equivalence of the [method and apparatus claims] is readily apparent and the only real difference between the claims is the form in which they were drafted.") (citation omitted).

B. Invalidity under § 112, ¶ 1: Lack of Enablement and Written Description

Pursuant to pre-AIA 35 U.S.C. § 112, first paragraph, "[t]he specification shall contain a written description of the invention, and the manner and process of making and using it, in such full, clear, concise, and exact terms as to enable any person skilled in the art to which it pertains, or with which it is most nearly connected, to make and use the same, and shall set forth the best mode contemplated by the inventor of carrying out his invention."

To satisfy the written description requirement, a patent specification must describe the claimed invention in sufficient detail that one skilled in the art can reasonably conclude that the inventor had possession of the claimed invention. *See, e.g.*, *Moba B.V. v. Diamond Automation, Inc.*, 325 F.3d 1306, 1319 (Fed. Cir. 2003). The Federal Circuit has explained that a specification cannot always support expansive claim language and satisfy the requirements of 35 U.S.C. § 112 "merely by clearly describing one embodiment of the thing claimed." *LizardTech*, 424 F.3d at 1346. The issue is whether a person skilled in the art would understand the applicant to have invented, and been in possession of, the invention as broadly claimed. Furthermore, "actual 'possession' or reduction to practice outside of the specification is not enough." *Id.* at 1352. A "description that merely renders the invention obvious does not satisfy the requirement" because "it is the specification itself that must demonstrate possession." *Id.* Further still, if a patent owner applies its claims broadly to show infringement, that full scope must be enabled and described. *Liebel-Flarsheim Co. v. Medrad, Inc.*, 481 F.3d 1371, 1380 (Fed. Cir. 2007) ("[t]he irony of this situation is that Liebel successfully pressed to have its claims include a jacketless system, but, having won that battle, it then had to show that such a claim was fully enabled, a challenge it could not meet. The motto, 'beware of what one asks for,' might be applicable here").

For a patent to satisfy the enablement requirement, "the specification of a patent must teach those skilled in the art how to make and use the full scope of the claimed invention without 'undue experimentation.'" *MagSil Corp.* v. *Hitachi Global Storage Techs.*, 687 F.3d 1377, 1381 (Fed. Cir. 2012) (emphasis added). "[T]he "enablement inquiry necessarily depends on an interpretation of the claims." *McRO, Inc. v. Bandai Namco Games America Inc*., 959 F.3d 1091, 1100 (Fed. Cir. 2020).

As indicated below, a person of ordinary skill in the art would not understand the named inventors to be in possession of the purported inventions recited in the Asserted Claims, nor do the specifications of the Asserted Patents enable a person of ordinary skill in the art to practice the alleged inventions without undue experimentation.

1. The ’345 Patent

A person of ordinary skill in the art would not understand the named inventors to be in possession of the purported inventions recited in the ’345 Patent, nor does the specification of the ’345 Patent enable a person of ordinary skill in the art to practice the alleged inventions without undue experimentation. For example, the ’345 Patent specification neither describes (such that one skilled in the art would have understood that the applicant was in possession of) nor enables the full scope of an invention comprising the following claim terms and/or limitations:

- “predistorting the RF modulated signal to be transmitted using an I/Q modulator interposed between the signal source and the input of the power amplifier, and controlled by means of amplitude and phase look-up tables stored in a distorting generator” (claim 1)
- “modeling the power amplifier in response to the first and second feedback signals” (claim 1)
- “updating the predistortion amplitude and phase look-up tables in response to said modeling of the power amplifier” (claim 1)
- “a predistortion function correlated to a behavior of the power amplifier including nonlinearities and memory effects” (claim 1)
- “wherein said updating step is done when a linearity metric adjacent channel power ratio (ACPR) measurement sub-step indicates that the predistorting step is not

adequate to meet predetermined ACPR standards" (claim 3)

- "a digital receiver that includes a first channel that is tuned to a mean frequency and a second channel that is tuned to a predetermined offset frequency" (claim 4)
- "said linearity metric ACPR measurement sub-step including comparing an average power at the mean frequency and at the predetermined offset frequency" (claim 4)
- "a control module receiving said first and second feedback signals from said first and second digital receivers" (claim 5)
- "said control module being so configured as to model the power amplifier in response to the first and second feedback signals and to update said amplitude and phase look-up tables of said distorting generator in response to a dynamic modeling of the power amplifier" (claims 5, 7, 9)
- "wherein said control module is further configured as to insert an adequate delay between the first feedback signal and the second feedback signal" (claim 11)

2. The '561 Patent

A person of ordinary skill in the art would not understand the named inventors to be in possession of the purported inventions recited in the '561 Patent, nor does the specification of the '561 Patent enable a person of ordinary skill in the art to practice the alleged inventions without undue experimentation. For example, the '561 Patent specification neither describes (such that one skilled in the art would have understood that the applicant was in possession of) nor enables the full scope of an invention comprising the following claim terms and/or limitations:

- "a first module characterizing dynamic nonlinear characteristics of the system" (claim 1)

- "a second module characterizing static nonlinear characteristics of the nonlinear system" (claim 1)
- "wherein the first module comprises a nonlinear finite impulse response-based memory effect system" (claim 4)
- "wherein the first module is a dynamic weak nonlinear model and the second module is a static strong nonlinear model" (claim 5)
- "wherein the first module comprises a finite impulse response filter-based multi-branch nonlinear system" (claim 6)
- "a dynamic nonlinear predistorter module" (claims 7, 11)
- "a static nonlinear predistorter module" (claims 7, 11, 15, 19)
- "wherein the dynamic nonlinear predistorter is a finite impulse response-based memory effect predistorter" (claims 8, 12, 16, 20)
- "wherein the dynamic nonlinear predistorter is a dynamic weak nonlinear predistorter and the static nonlinear predistorter is a static strong nonlinear predistorter" (claims 9, 13, 17, 21)
- "wherein the dynamic weak nonlinear predistorter is implemented as a finite impulse response filter-based multi-branch nonlinear structure embedded within a polynomial like series" (claim 10)
- "wherein the dynamic weak nonlinear predistorter module is implemented as a finite impulse response filter-based multi-branch nonlinear structure" (claims 14, 18, 22)
- "a dynamic nonlinear first order predistorter module" (claim 15, 19)

3. The ’857 Patent

A person of ordinary skill in the art would not understand the named inventors to be in possession of the purported inventions recited in the ’857 Patent, nor does the specification of the ’857 Patent enable a person of ordinary skill in the art to practice the alleged inventions without undue experimentation. For example, the ’857 Patent specification neither describes (such that one skilled in the art would have understood that the applicant was in possession of) nor enables the full scope of an invention comprising the following claim terms and/or limitations:

- “estimating impairments generated by the multiple-input and multiple-output transmitter, the impairments comprising nonlinear crosstalk between distinct ones of the plurality of input signals” (claim 1)
- “adjusting the pre-distorted multiple-input signal to compensate for the estimated impairments” (claim 1)
- “wherein generating the pre-distorted multiple-input signal comprises feeding the received multiple-input signal to a matrix of pre-processing cells” (claim 1)
- “nonlinear processing blocks compensating for multiple-input multiple-output nonlinear distortion and an effect of interferences between signal paths of the multiple-input signal and signal paths of the multiple-output signal” (claim 1, 8, 15)
- “linear processing blocks compensating for the multiple-input multiple-output linear distortions and the effect of interferences between the signal paths of the multiple-input signal and the signal paths of the multiple-output signal” (claim 1, 15)
- “introducing interference between each signal path of the multiple input signal” (claim 3)

- "a matrix of pre-processing cells for generating a pre-distorted multiple-input signal from the received multiple-input signal" (claim 8, 15)
- "nonlinear processing blocks compensating for multiple-input multiple-nonlinear distortions and an effect of interferences between signal paths of the multiple input signal and signal paths of the multiple-output signal" (claim 8)
- "linear processing compensating for multiple-input multiple-output linear distortions and the effect of interferences between the signal paths of the multiple-input signal and the signal paths of the multiple-output signal" (claim 8)
- "wherein the adjustment of the predistorted multiple-input signal further introduces interference between each signal path of the multiple-input signal" (claim 10)

Similarly, to the extent Smart RF contends the '857 Patent claims extend (and/or to the extent the '857 claims are construed) to cover instrumentalities neither structurally identical nor structurally equivalent to the structures that the patent specification discloses above for performing the recited functions, the claims would be invalid for lack of adequate written description under Section 112 because the specification fails to provide an adequate description such that one of ordinary skill in the art would conclude that the named inventors had possession of such a claimed invention at the time of filing. *See Ariad Pharms., Inc.*, 598 F.3d at 1351; *see also LizardTech, Inc.*, 424 F.3d at 1344–45. In addition, the '857 Patent claims would be invalid for lack of enablement under Section 112 because the specification does not contain sufficient information to enable a person of ordinary skill in the art to make and use the full scope of such a claimed invention without undue experimentation. *See Sitrick v. Dreamworks, LLC*, 516 F.3d 993, 999 (Fed. Cir. 2008); *see also In re Wands*, 858 F.2d 731, 737 (Fed. Cir. 1988).

4. The ’204 Patent

A person of ordinary skill in the art would not understand the named inventors to be in possession of the purported inventions recited in the ’204 Patent, nor does the specification of the ’204 Patent enable a person of ordinary skill in the art to practice the alleged inventions without undue experimentation. For example, the ’204 Patent specification neither describes (such that one skilled in the art would have understood that the applicant was in possession of) nor enables the full scope of an invention comprising the following claim terms and/or limitations:

- “a concurrent digital multi-band predistortion block configured to effect predistortion of the modulated concurrent multi-band signals to compensate for a non-linearity of the power amplifier” (claim 1)
- “a signal observation feedback loop configured to effect concurrent sampling of the amplified concurrent multi-band signals at a subsampling frequency lower than twice a highest signal frequency in the amplified concurrent multi-band signals” (claim 1)
- “a plurality of digital baseband signal predistorter blocks, each baseband signal predistorter block having a plurality of first inputs and a single output, the plurality of first inputs corresponding in number to the multiple bands of the multi-band transmitter and each first input corresponding to a single frequency channel” (claim 2)
- “wherein the signal observation feedback loop includes an analyzing and modeling stage directly connected to each of the plurality of outputs of said digital multi-band predistortion block for receiving the respective predistorted signals and for using said received predistored signals in controlling said digital multi-band predistortion

block" (claim 3)

- "perform time alignment of complex baseband signals from sampling said outputs of said power amplifier; and perform the reconstruction of the complex baseband signals from sampling said outputs of said power amplifier" (claim 5)
- "wherein the subsampling frequency is greater than two times a signal bandwidth of the modulated concurrent multi-band signals" (claims 10, 13)
- "wherein the subsampling frequency fs is in a range $2fu/n \leqq fs \leqq 2h/(n-1)$where $1 \leqq n \leqq |fu/B|$, and where B is a bandwidth of the amplified concurrent multi-band signals, and fL fu, are respective lower and upper frequencies of the bandwidth, and n is an integer" (claims 11 and 15)
- "predistorting the modulated concurrent multi-band signal to compensate for a non-linearity of the power amplifier" (claim 12)
- "subsampling of the amplified concurrent multi-band signals at a subsampling frequency lower than twice a highest signal frequency in the amplified multi-band signal" (claim 12)
- "controlling the predistorting by the subsampled concurrent multi-band signal" (claim 12).

Similarly, to the extent Smart RF contends the '204 Patent claims extend (and/or to the extent the '204 Patents claims are construed) to cover instrumentalities neither structurally identical nor structurally equivalent to the structures that the patent may specification disclose to perform the functions recited by, for example, the "concurrent digital multi-band predistortion block," the "signal observation feedback loop," the "plurality of digital baseband signal predistorter blocks," or the "analyzing and modeling stage," the claims would be invalid for lack

of adequate written description under Section 112 because the specification fails to provide an adequate description such that one of ordinary skill in the art would conclude that the named inventors had possession of such a claimed invention at the time of filing. *See Ariad Pharms., Inc.*, 598 F.3d at 1351; *see also LizardTech, Inc.*, 424 F.3d at 1344–45. In addition, the '204 Patent claims would be invalid for lack of enablement under Section 112 because the specification does not contain sufficient information to enable a person of ordinary skill in the art to make and use the full scope of such a claimed invention without undue experimentation. *See Sitrick v. Dreamworks, LLC*, 516 F.3d at 999; *see also*, *In re Wands*, 858 F.2d at 737. Stated differently, because the '204 Patent attempts to claim any and all ways of dual-band linearization using a generic and unspecified "analyzing and modeling stage" without limiting the purported invention to any actual model or algorithm, the Asserted Claims are invalid for lacking written description and proper enablement.

5. The '296 Patent

A person of ordinary skill in the art would not understand the named inventors to be in possession of the purported inventions recited in the '296 Patent, nor does the specification of the '296 Patent enable a person of ordinary skill in the art to practice the alleged inventions without undue experimentation. For example, the '296 Patent specification neither describes (such that one skilled in the art would have understood that the applicant was in possession of) nor enables the full scope of an invention comprising the following claim terms and/or limitations:

- "a digital signal predistorter block including digital baseband signal predistorters effecting predistortion of concurrent input signals to output concurrent predistorted signals" (claim 1)
- "an analyzing and modelling stage receiving first feedback signals taken from an

output of the power amplifier, and second feedback signals taken concurrently from the concurrent predistorted signals and using the first feedback and the second feedback signals in the analyzing and modelling stage to model a nonlinearity in the power amplifier, wherein the digital baseband signal predistorters are updated by the analyzing and modelling stage" (claim 1)

- "a plurality of the digital baseband signal predistorters each corresponding to a respective channel; and a signal observation feedback loop for generating said first feedback signals" (claim 2)
- "a plurality of inputs, each input corresponding to a single frequency channel; and a plurality of outputs, each output corresponding to a single frequency channel, and each output connected to an input of a concurrent multi-band transmitter" (claim 3)
- "perform time alignment of complex baseband signals from sampling said first feedback signals; and perform reconstruction of the complex baseband signals from said sampling" (claim 5)
- "effecting predistortion of concurrent input signals to output concurrent predistorted signals using a digital signal predistorter block including digital baseband signal predistorters" (claim 10)
- "receiving in an analyzing and modeling stage first feedback signals taken from an output of the power amplifier, and second feedback signals taken concurrently from the concurrent predistorted signals" (claim 10)
- "using the first feedback and the second feedback signals in the analyzing and modeling stage to model a nonlinearity in the power amplifier, wherein the digital baseband signal predistorters are updated by the analyzing and modelling stage"

(claim 10)

Similarly, to the extent Smart RF contends the ’296 Patent claims extend (and/or to the extent the ’296 Patents claims are construed) to cover instrumentalities neither structurally identical nor structurally equivalent to the structures that the patent may specification disclose to perform the functions recited by, for example, the “digital signal predistorter block,” “digital baseband signal predistorters,” “analyzing and modelling stage,” or “signal observation feedback loop,” the claims would be invalid for lack of adequate written description under Section 112 because the specification fails to provide an adequate description such that one of ordinary skill in the art would conclude that the named inventors had possession of such a claimed invention at the time of filing. *See Ariad Pharms., Inc.*, 598 F.3d at 1351; *see also LizardTech, Inc.*, 424 F.3d at 1344–45. In addition, the ’296 Patent claims would be invalid for lack of enablement under Section 112 because the specification does not contain sufficient information to enable a person of ordinary skill in the art to make and use the full scope of such a claimed invention without undue experimentation. *See Sitrick v. Dreamworks, LLC*, 516 F.3d at 999; *see also*, *In re Wands*, 858 F.2d 731, 737. Stated differently, because the ’296 Patent attempts to claim any and all ways of dual-band linearization using a generic and unspecified “analyzing and modeling stage” without limiting the purported invention to any actual model or algorithm, the Asserted Claims are invalid for lacking written description and proper enablement.

V. INVALIDITY UNDER 35 U.S.C. § 101

A. PATENT SUBJECT MATTER INELIGIBILITY CONTENTIONS

The Asserted Claims are ineligible under 35 U.S.C. § 101 because they “are directed to [a] patent-ineligible concept[]” and, further, do not contain “additional elements [that] ‘transform the nature of the claim’ into a patent-eligible application.” *Alice Corp. Pty. v. CLS Bank Int’l*, 573 U.S. 208, 217-18 (2014). Moreover, the various steps set forth in the Asserted Claims were well-

understood, routine, and conventional at the time of the priority date of each patents. The Asserted Claims therefore provide no inventive concept. The bases for Defendants' subject matter ineligibility contentions are set forth more fully in Defendants' July 31, 2024 Subject-Matter Eligibility contentions and charts attached thereto.

B. INVALIDITY BASED ON OBVIOUSNESS-TYPE DOUBLE PATENTING

1. Legal Standard

The judge-made doctrine of obviousness-type double patenting, or nonstatutory double patenting, is grounded in Section 101 of the Patent Act and forbids an individual from obtaining more than one patent on the same invention. *Abbvie Inc. v. Mathilda and Terence Kennedy Institute of Rheumatology Trust*, 764 F.3d 1366, 1372 (Fed. Cir. 2014). The central question in the nonstatutory double patenting analysis is whether the claims of the later patent would have been obvious over, or anticipated by, the earlier claims read in light of the prior art. *Eli Lilly & Co. v. Barr Labs., Inc.*, 251 F.3d 955, 968 (Fed. Cir. 2001). "The obviousness-type double patenting analysis involves two steps: First, the court construes the claim[s] in the earlier patent and the claim[s] in the later patent and determines the differences. Second, the court determines whether those differences render the claims patentably distinct." *Abbvie Inc.*, 764 F.3d at 1374 (quoting *Sun Pharm. Indus., Ltd. v. Eli Lilly & Co.*, 611 F.3d 1381, 1385 (Fed. Cir. 2010); internal quotations omitted).

Like claim construction, invalidity for nonstatutory double patenting is a question of law. *Georgia-Pacific Corp. v. U.S. Gypsum Co.*, 195 F.3d 1322, 1326 (Fed. Cir. 1999); *In re Goodman*, 11 F.3d 1046, 1052 (Fed. Cir. 1993) ("Obviousness-type double patenting is a question of law."). The earlier patent's specification is not generally available as prior art in a nonstatutory double patenting analysis; however, the specification may be used to provide insight into the scope of the claims and what was known in the prior art at the relevant time. *Sun Pharm. Indus.*, 611 F.3d at

1387 ("[T]he specification's disclosure may be used to determine whether a claim 'merely define[s] an obvious variation of what is earlier disclosed and claimed,' 'to learn the meaning of [claim] terms,' and to 'interpret [] the coverage of [a] claim.'"). In addition, as in claim construction, the scope and meaning of terms in obviousness-type doubling patenting analysis is evaluated from the perspective of a person of ordinary skill in the art in context of the ***entire patent, including the specification***. *Id*. at 1388 (citing *ICU Med., Inc. v. Alaris Med. Sys., Inc.*, 558 F.3d 1368, 1374 (Fed. Cir. 2009)).

2. The Asserted Claims of the '345 Patent Are Not Patentably Distinct from U.S. Patent No. 6,072,364

U.S. Patent No. 6,072,364 ("the '364 Patent"), titled "Adaptive digital predistortion for power amplifiers with real time modeling of memoryless complex gains," was filed on June 17, 1997 and issued on June 6, 2000. Each of the named inventors for the '364 Patent—Ernesto G. Jeckeln, Fadhel M. Ghannouchi, and Mohamed A. Sawan—are also named inventors for the '345 Patent. The '364 Patent claims, read in light of the specification of the '364 Patent and what was known in the prior art, demonstrate there is no patentable distinction between the digital predistortion techniques claimed in the '345 Patent and those covered by the '364 Patent.

The '345 Patent contains six independent claims—claims 1, 3, 5, 7, 9, and 11. While these claims are allegedly more narrowly drawn than the '364 Patent claims (as shown in the table below), these claims are patentably indistinguishable from the '345 Patent claims when read in claim of the specification of the '364 Patent and the prior art. *See Georgia-Pacific*, 195 F.3d at 1328 (finding a later narrow claim invalid for nonstatutory double patenting over an earlier broad claim where the narrower claim added no patentable distinction).

'364 Patent, claim 1	'345 Patent, claim 1
1. An adaptive method for predistorting a signal to be transmitted, supplied by a signal	1. An adaptive method for predistorting an RF modulated signal, to be transmitted, supplied

source to an input of a power amplifier having an output for delivering an amplified output signal, comprising the steps of:	by a signal source to an input of a power amplifier having an output for delivering an amplified output signal, said method comprising the steps of:
predistorting the signal to be transmitted by means of predistortion amplitude and phase look-up table means interposed between the signal source and the input of the power amplifier;	predistorting the RF modulated signal to be transmitted using an I/Q modulator interposed between the signal source and the input of the power amplifier, and controlled by means of amplitude and phase look-up tables stored in a distorting generator;
producing a first feedback signal in response to the predistorted signal;	producing, via a first digital receiver, a first feedback signal in response to the RF predistorted signal;
producing a second feedback signal in response to the amplified output signal from the power amplifier;	producing, via a second digital receiver, a second feedback signal in response to the RF amplified output signal from the power amplifier;
delaying at least one of the first and second feedback signals for eliminating any time lag between said first and second feedback signals;	
modeling the power amplifier in response to the first and second feedback signals; and	modeling the power amplifier in response to the first and second feedback signals; and
updating the predistortion amplitude and phase look-up table means in response to said modeling of the power amplifier.	updating the predistortion amplitude and phase look-up tables in response to said modeling of the power amplifier, wherein said second feedback signal includes the complex envelope of the RF amplified output signal, and wherein said modeling step includes the discrimination of the complex envelope of the first feedback signal referenced to the complex envelope of the second feedback signal to yield a predistortion function correlated to a behaviour of the power amplifier including nonlinearities and memory effects.

Underlining has been added to indicate the primary differences between these claims. As shown

above, exemplary claim 1 of the ’345 Patent is a near-verbatim recitation of claim 1 of ’364 Patent with only insubstantial differences.

a. An “RF modulated” signal is a “signal”

The ’345 Patent’s requirement that the “signal” be an “*RF modulated*” signal does not render the claims patentably distinct from the ’364 Patent. The ’364 Patent specification contemplates that a “signal,” as used in the ’364 Patent claims, may be an RF modulated signal. Further, Plaintiff’s apparent claim constructions as evidenced by Plaintiff’s February 27, 2025 Supplemental Infringement Contentions at Exhibit A, do not distinguish “a signal” from “*an RF modulated* signal.”[16] Thus, Plaintiff cannot reasonably dispute that the terms “RF modulated” render the ’354 Patent claims patentably distinct from claims of the ’364 Patent. To the extent Plaintiff contends that the ’364 Patent does not anticipate this limitation of the ’345 Patent, a person of skill would have understood that this limitation is an obvious variant of the ’364 Patent claims in light of the ’364 Patent specification and prior art. Thus, this limitation does not render the ’345 Patent claim 1 patentably distinct from the ’364 Patent as evidenced by claim 1 of the ’364 Patent, the ’364 specification, and the scope and content of the prior art, as explained in Exhibit A-9 and throughout these Invalidity Contentions.

b. An “I/Q modulator” and “a distorting generator” are both predistorting “means”

The ’345 Patent’s reference to “an I/Q modulator” and “a distorting generator” does not render it patentably distinct from the ’364 Patent when viewed in light of the ’364 Patent

[16] Defendants are not adopting Smart RF’s apparent constructions, nor are Defendants’ admitting to the accuracy of any particular construction. Defendants reserve all rights to revise these contentions in light of any claim construction developments or any amendment to Smart RF’s infringement contentions. Defendants additionally reserve all rights to present expert testimony and other evidence supporting alternative constructions during claim construction and at trial.

specification and the prior art. The ’364 Patent claim 1 recites, using means-plus-function language subject to pre-AIA § 112 paragraph 6, predistorting a signal “*by means of predistortion amplitude and phase look-up table means*.” Under § 112 paragraph 6, an “I/Q modulator” and “distorting generator” are corresponding structures and materials or equivalents thereof that are described in the ’364 Patent with regard to this limitation. Thus, it is clear that an “I/Q modulator” and “distorting generator” are predistorting “means” according to claim 1 of the ’364 Patent. To the extent Plaintiff contends that the ’364 Patent does not anticipate this limitation of the ’345 Patent, a person of skill would have understood that this limitation is an obvious variant of the ’364 Patent claims in light of the ’364 Patent specification and prior art. Thus, this limitation does not render the ’345 Patent claim 1 patentably distinct from the ’364 Patent as evidenced by claim 1 of the ’364 Patent, the ’364 specification, and the scope and content of the prior art, as explained in Exhibit A-9 and throughout these Invalidity Contentions.

c. Producing feedback signals via a first and second “digital receiver” is included in claim 1 of the ’364 Patent

The ’345 Patent requires producing a first and second feedback signal “via a . . . digital receiver.” Based on Defendant’s understanding of Plaintiff’s apparent claim constructions for the first and second “digital receiver”—as evidenced by Plaintiff’s February 27, 2025 Supplemental Infringement Contentions at Exhibit A—this limitation is not patentably distinct from the ’364 Patent claim 1.[17] For example, according to Plaintiff, the digital signal “z(n)” is produced “via a first digital receiver” when it is “received” by a digital signal processor or software-defined

[17] Defendants are not adopting Smart RF’s apparent constructions, nor are Defendants’ admitting to the accuracy of any particular construction. Defendants reserve all rights to revise these contentions in light of any claim construction developments or any amendment to Smart RF’s infringement contentions. Defendants additional reserve all rights to present expert testimony and other evidence supporting alternative constructions during claim construction and at trial.

"Estimation" block:

Functional Description

Mathematical Foundation

Digital Pre-Distortion (DPD) acts on transmitted data to cancel the distortion in the PA by implementing an inverse model of the amplifier. In the conceptual view of Figure 1, the pre-distortion function is applied to the sequence of (digital) transmitted data x(n). It models the non-linearity of the PA.

The processes involved are the formulation of the model on which the pre-distortion function is based. Estimation of its parameters is based on samples of the PA input and output. To separate the linear effect of the PA and the circuitry that drives it, estimation is based on the *aligned* PA output y(n). The alignment process matches the amplitude, delay and phase variations of $y_0(n)$ to z(n). The predistorter is then dedicated to only modeling the non-linear effects for which it is intended. *Alignment* and *estimation* blocks are depicted in Figure 1.

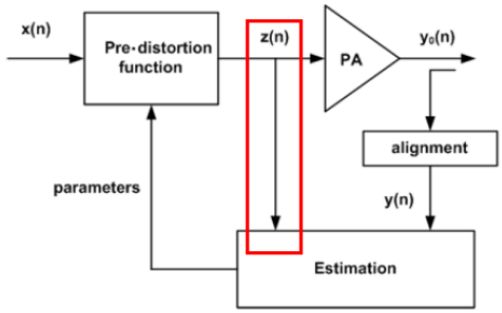

Figure 1: **DPD Algorithmic View**

See Plaintiffs' February 27, 2025 Supp. Infr. Conts., Exh. A at 26. In other words, under Plaintiff's apparent construction, anything that receives a digital signal may be a "digital receiver."

As shown in claim 1, the '364 Patent recites producing a first feedback and second feedback signal. Viewed in light of the specification, it is beyond dispute that these signals are digital signals that are "received" according to Plaintiff's apparent interpretation of this limitation. Thus, under Plaintiff's apparent construction or indeed under any reasonable construction, the '345 Patent's requirement for a first and second "digital receiver" is not patentably distinct from the '364 Patent's claim 1. To the extent Plaintiff contends that the '364 Patent does not anticipate this limitation of the '345 Patent, a person of skill would have understood that this limitation is an obvious variant of the '364 Patent claim 1 in light of the '364 Patent specification and prior art. Thus, this limitation does not render the '345 Patent claim 1 patentably distinct from the '364 Patent as evidenced by claim 1 of the '364 Patent, the '364 specification, and the scope and content of the prior art, as explained in Exhibit A-9 and throughout these Invalidity Contentions.

d. It would have been obvious that the "second feedback signal" of the '364 Patent "includes the complex envelope of the RF amplified output signal"

The '345 Patent requires that "the second feedback signal includes the complex envelope of the RF amplified output signal." The '364 Patent claim 1 discloses that the "second feedback signal" includes the complex envelope of the RF amplified output signal and thus anticipates this limitation. Thus, the '345 Patent's requirement that the second feedback signal includes the complex envelope of the RF amplified output signal" does not render it patentably distinct from claim 1 of the '364 Patent. To the extent Plaintiff contends that the '364 Patent does not anticipate this limitation of the '345 Patent, a person of skill would have understood that this limitation is an obvious variant of the '364 Patent claim 1 in light of the '364 Patent specification and prior art. Thus, this limitation does not render the '345 Patent claim 1 patentably distinct from the '364 Patent as evidenced by claim 1 of the '364 Patent, the '364 specification, and the scope and content of the prior art, as explained in Exhibit A-9 and throughout these Invalidity Contentions.

e. It would have been obvious that the "modeling" step of the '364 Patent "includes the discrimination of the complex envelope of the first feedback signal referenced to the complex envelope of the second feedback signal to yield a predistortion function correlated to a behaviour of the power amplifier including nonlinearities and memory effects"

The '345 Patent requires that "the modeling step includes the discrimination of the complex envelope of the first feedback signal referenced to the complex envelope of the second feedback signal to yield a predistortion function correlated to a behaviour of the power amplifier including nonlinearities and memory effects." The '364 Patent claim 1 recites "modeling the power amplifier in response to the first and second feedback signals." As explained above, a person of skill would have understood that by taking the feedback signals immediately before and after the power amplifier, the '364 Patent recites discriminating the first and second feedback signals "to

yield a predistortion function correlated to a behaviour of the power amplifier including nonlinearities and memory effects." Thus, the '345 Patent's requirement that the modeling step include "the discrimination of the complex envelope of the first feedback signal referenced to the complex envelope of the second feedback signal to yield a predistortion function correlated to a behaviour of the power amplifier including nonlinearities and memory effects" does not render it patentably distinct from claim 1 of the '364 Patent. To the extent Plaintiff contends that the '364 Patent does not anticipate this limitation of the '345 Patent, a person of skill would have understood that this limitation is an obvious variant of the '364 Patent claim 1 in light of the '364 Patent specification and prior art. Thus, this limitation does not render the '345 Patent claim 1 patentably distinct from the '364 Patent as evidenced by claim 1 of the '364 Patent, the '364 specification, and the scope and content of the prior art, as explained in Exhibit A-9 and throughout these Invalidity Contentions.

* * *

In sum, every limitation of claim 1 of the '364 Patent is either expressly contained in claim 1 of the '364 Patent, or would be an obvious variant of that claim in light of the prior art. Claim 1 of the '345 Patent is therefore invalid for nonstatutory double patenting over claim 1 of '364 Patent. *See Georgia-Pacific*, 195 F.3d at 1328 (finding narrow claims invalid for nonstatutory double patenting where they added no patentable distinction over broader claims in an earlier patent).

3. The Remaining Claims Provide No Patentable Distinction Over the Claims of the '364 Patent

Each of the remaining independent claims 3, 5, 7, 9, and 11 and dependent claims 2, 4, 6, 8, and 10 of the '345 Patent impose additional limitations, but none of these limitations provide a patentable distinction over the claims of the '364 Patent. Identification of the specific claims and claim elements of the '364 Patent that anticipate and/or render obvious each of the limitations of

the claims of the ’345 Patent are set forth in detail in Exhibit A-9 to these Invalidity Contentions. To the extent Plaintiff contends that the ’364 Patent does not anticipate any limitation of the ’345 Patent claims, Defendants contend it would have been obvious to combine or modify the ’364 Patent claims with concepts from other prior art, as explained throughout these Invalidity Contentions.

Each Asserted Claim of the ’345 Patent is either identical to the inventions described in the ’364 Patent, or an obvious variant thereof. Each of the Asserted Claims of the ’345 Patent is therefore invalid for obviousness-type double patenting.

VI. P.R. 3-4 DISCLOSURES AND CONTENTIONS

Pursuant to P.R. 3-4(a), Defendants produced, on July 10, 2024, representative technical documentation within their possession, custody, and control that show the operation of aspects or elements of the Accused Instrumentality identified by Smart RF in its Infringement Contentions for each Defendant. Defendants reserve the right to supplement these disclosures with additional documentation.

In accordance with P.R. 3-4(b), Defendants have produced and are producing a single set of prior art references identified in these Supplemental Invalidity Contentions for prior art related to patents asserted against more than one Defendant. Such documents can be found at the following Bates range: DEF-0000001 to DEF-0009241. Any prior art references not in English are produced with an English translation of the portion(s) relied upon. These prior art references are cited herein and support the contentions presented. Defendants’ search for prior art references, additional documentation, and/or corroborating evidence concerning prior art apparatuses and methods is ongoing. Accordingly, Defendants reserve the right to supplement their production, as provided by the local rules, as additional prior art references, additional documentation, and/or corroborating evidence concerning prior art documents/apparatuses, and methods are obtained

during the course of discovery.

VII. OTHER RELEVANT PRIOR ART

In addition to the items of prior art identified above and in the attached claim charts, and cited in the Asserted Patents, Defendants list additional prior art references that are pertinent to the invalidity of the Asserted Patents in Table F below. The information disclosed by these references may have formed the background knowledge of a person of ordinary skill in the art at the time the Asserted Patents were filed and may have been used in determining whether and how to combine references to achieve the claimed inventions. *See Randall Mfg. v. Rea*, 733 F.3d 1355, 1362 (Fed. Cir. 2013) (stating that "the knowledge [of a person of ordinary skill in the art] is part of the store of public knowledge that must be consulted when considering whether a claimed invention would have been obvious"). Defendants expressly reserve the right to rely on each of the prior art references, systems, concepts, and technologies disclosed by these references with respect to each of the Asserted Patents. In addition to the prior art identified below, Defendants reserve the right to rely on each of the prior art references in its prior art document production to show the background knowledge of a person of ordinary skill.

These prior art references, along with those listed above and those cited in the Asserted Patents, are being provided in the document production accompanying these Supplemental Invalidity Contentions.

Despite the lack of certainty as to both Plaintiff's infringement contentions and the construction of claim terms, Defendants have nevertheless specified certain obviousness combinations in Section II.B. above. Defendants reserve the right to rely on combinations of any of the items of prior art listed above and in the Exhibits with each other, and/or any of the prior art references listed in Table F or in the Asserted Patents. Certain combinations may become more pertinent as Defendants gain more clarity regarding Plaintiff's contentions or interpretations of the

Asserted Claims. Defendants have not provided claim charts for all of these references because, based on Plaintiff's infringement contentions (and apparent, corresponding claim constructions) thus far, these references: (i) have substantially similar or cumulative disclosures to other prior art for which claim charts have been provided (an such an effort would be unnecessarily duplicative); (ii) could be used interchangeably as supporting references in an obviousness combination with references already cited; and/or (iii) are not the most pertinent references based on Defendants' current understanding of Plaintiff's contentions.

Defendants reserve the right to revise these Supplemental Invalidity Contentions and to rely on these references to prove the invalidity of the Asserted Claims in a manner consistent with the Federal Rules of Civil Procedure, the Local Rules, and any pertinent Orders of the Court.

Also, to the extent that the technologies described in the references identified in these Supplemental Invalidity Contentions were embodied in products or systems available as prior art to the Asserted Patents, and to the extent Defendants are able to discover information concerning the operation and function of the same, Defendants contend that such products or systems are also prior art that may be combined with one another to invalidate the Asserted Claims.

Table F. Other Relevant Prior Art References

U.S. Patents
U.S. Patent No. 5,105,445
U.S. Patent No. 5,732,333
U.S. Patent No. 5,745,006
U.S. Patent No. 5,818,298
U.S. Patent No. 5,867,065
U.S. Patent No. 5,892,397
U.S. Patent No. 5,900,778
U.S. Patent No. 5,917373
U.S. Patent No. 5923,712
U.S. Patent No. 5,933,767
U.S. Patent No. 5,949,283
U.S. Patent No. 6,054,896
U.S. Patent No. 6,072,364
U.S. Patent No. 6,112,059
U.S. Patent No. 6,222,878
U.S. Patent No. 6,236,837
U.S. Patent No. 6,240,144
U.S. Patent No. 6,246,286
U.S. Patent No. 6,285,412
U.S. Patent No. 6,288,610
U.S. Patent No. 6,320,463
U.S. Patent No. 6,342,810
U.S. Patent No. 6,356,146
U.S. Patent No. 6,388,513
U.S. Patent No. 6,400,774
U.S. Patent No. 6,462,617
U.S. Patent No. 6,600,792
U.S. Patent No. 6,621,340
U.S. Patent No. 6,677,870
U.S. Patent No. 6,693,974
U.S. Patent No. 6,711,217
U.S. Patent No. 6,741,662
U.S. Patent No. 6,751,447
U.S. Patent No. 6,766,151
U.S. Patent No. 6,798,843
U.S. Patent No. 6,801,086
U.S. Patent No. 6,903,604
U.S. Patent No. 6,930,547

U.S. Patent No. 6,931,080
U.S. Patent No. 7,035,345
U.S. Patent No. 7,058,369
U.S. Patent No. 7,058,617
U.S. Patent No. 7,116,167
U.S. Patent No. 7,142,615
U.S. Patent No. 7,145,962
U.S. Patent No. 7,149,257
U.S. Patent No. 7,194,043
U.S. Patent No. 7,197,287
U.S. Patent No. 7,336,716
U.S. Patent No. 7,348,843
U.S. Patent No. 7,348,844
U.S. Patent No. 7,388,430
U.S. Patent No. 7,409,007
U.S. Patent No. 7,415,252
U.S. Patent No. 7,439,895
U.S. Patent No. 7,469,491
U.S. Patent No. 7,471,736
U.S. Patent No. 7,479,828
U.S. Patent No. 7,542,518
U.S. Patent No. 7,558,332
U.S. Patent No. 7,561,636
U.S. Patent No. 7,561,857
U.S. Patent No. 7,577,211
U.S. Patent No. 7,627,293
U.S. Patent No. 7,657,405
U.S. Patent No. 7,706,467
U.S. Patent No. 7,742,748
U.S. Patent No. 7,924,942
U.S. Patent No. 8,040,182
U.S. Patent No. 8,260,143
U.S. Patent No. 8,294,516
U.S. Patent No. 8,380,144
U.S. Patent No. 8,532,215
U.S. Patent No. 8,542,768
U.S. Patent No. 8,767,857
U.S. Patent No. 8,854,989
U.S. Patent No. 8,873,674
U.S. Patent No. 9,362,869

U.S. Patent Applications
U.S. Pat. App. No. 2001/0014592
U.S. Pat. App. No. 2002/0171485
U.S. Pat. App. No. 2003/0053552
U.S. Pat. App. No. 2003/0058959
U.S. Pat. App. No. 2003/0179830
U.S. Pat. App. No. 2004/0142667
U.S. Pat. App. No. 2004/0179629
U.S. Pat. App. No. 2004/0264597
U.S. Pat. App. No. 2005/0089125
U.S. Pat. App. No. 2005/0162225
U.S. Pat. App. No. 2005/0163251
U.S. Pat. App. No. 2005/0168283
U.S. Pat. App. No. 2005/0195919
U.S. Pat. App. No. 2005/0219089
U.S. Pat. App. No. 2005/0242876
U.S. Pat. App. No. 2006/0012427
U.S. Pat. App. No. 2006/0067426
U.S. Pat. App. No. 2006/0198459
U.S. Pat. App. No. 2006/0276147
U.S. Pat. App. No. 2007/0069813
U.S. Pat. App. No. 2007/0216554
U.S. Pat. App. No. 2007/0296494
U.S. Pat. App. No. 2008/0031309
U.S. Pat. App. No. 2008/0057880
U.S. Pat. App. No. 2008/0095266
U.S. Pat. App. No. 2008/0109503
U.S. Pat. App. No. 2008/0143562
U.S. Pat. App. No. 2008/0159435
U.S. Pat. App. No. 2008/0181285
U.S. Pat. App. No. 2009/0046003
U.S. Pat. App. No. 2009/0129257
U.S. Pat. App. No. 2009/0291650
U.S. Pat. App. No. 2010/0048146
U.S. Pat. App. No. 2010/0159837
U.S. Pat. App. No. 2010/0172309
U.S. Pat. App. No. 2010/0244950
U.S. Pat. App. No. 2011/0116567
U.S. Pat. App. No. 2011/0156815
U.S. Pat. App. No. 2012/0032739
U.S. Pat. App. No. 2012/0069931

U.S. Pat. App. No. 2012/0154038
Foreign Patents & Patent Applications
Chinese Pat. No. 101286963 A
Chinese Pat. No. 1195204 C
Chinese Pat. App. No. 201878098 U
European Pat. No. 1318643 B1
European Pat. No. EP1662655A1
European Pat. No. 1782554 B1
Finnish publication no. FI107100B
Finnish publication no. FI107212B
Finnish publication no. FI108377B
United Kingdom Pat. App. No. GB2323987 A
Japanese Pat. App. No. H11154880 A
Japanese Pat. App. No. 2006/135543 A
Japanese Pat. App. No. 2006/345066 A
Korean Pat. App. No. 1999/0060378 A
Korean Pat. App. No. 2007/0061746 A
International Pat. App. No. WO 0002324 A1
International Pat. App. No. WO 02095932 A1
International Pat. App. No. WO 1993/018581 A1
International Pat. App. No. WO 2001/008297 A1
International Pat. App. No. WO 2001/048998 A1
International Pat. App. No. WO 2002/073920 A1
International Pat. App. No. WO 2005/074121 A1
International Pat. App. No. WO 2005/076554 A1
International Pat. App. No. WO 2012/129768 A1
Taiwanese Pat. App. No. 2005/41280 A
Non-Patent Literature
Abdelhafiz, A. et al., "Augmented Dual-Band Digital Predistorter for Reducing Cross-Band Intermodulation Distortion Using Predictive Injection Technique," *IEEE Transactions on Microwave Theory and Techniques*, vol. 64, no. 11, pp. 3518-3527 (Nov. 2016).
Aschbacher, E., "Digital pre-distortion of microwave power amplifiers," *Diss. Technische Universität Wien* (2005).
Ata, O., "An amplifier predistort lineariser for future mobile radio basestations," *Thirteenth National Radio Science Conference. NRSC '96*, pp. 417-424, (1996).
Ata, O., "Predistortion as an effective technique for linearisation of basestation amplifiers in a mobile radio cellular system," *1997 IEEE International Conference on Personal Wireless Communications (Cat. No.97TH8338)*, pp. 147-151 (1997).
Ata, O., "Predistort-linearisation method for future basestation amplifiers of cellular radio," *Proceedings of PIMRC '96 - 7th International Symposium on Personal, Indoor, and Mobile Communications*, vol. 2, pp. 267-271 (1996).

Aziz, M. et al., "Statistics-Based Approach for Blind Post-Compensation of Modulator's Imperfections and Power Amplifier Nonlinearity," *IEEE Transactions on Circuits and Systems I: Regular Papers*, vol. 66, no. 3, pp. 1063-1075 (March 2019).
Baker, B., "Turning Nyquist upside down by undersampling," *EDN* 50, no. 10, pp. 28-29 (2005).
Barrak, R. et al., "Design of Sampling-Based Downconversion Stage for Multistandard RF Subsampling Receiver," *IEEE* (2006).
Barrak, R. et al., "Optimized multistandard RF subsampling receiver architecture," *IEEE Transactions on Wireless Communications* 8.6, pp. 2901-2909 (2009).
Bassam, S., et al., "Experimental study of the effects of RF front-end imperfection on MIMO transmitter performance," *2008 IEEE MTT-S International Microwave Symposium Digest* (2008).
Bassam, S. et al., "Crossover Digital Predistorter for the Compensation of Crosstalk and Nonlinearity in MIMO Transmitters," *IEEE Transactions on Microwave Theory and Techniques*, vol. 57, no. 5, pp. 1119-1128 (May 2009).
Bassam, S. et al., "Block-Wise Estimation of and Compensation for I/Q Imbalance in Direct-Conversion Transmitters," *IEEE Transactions on Signal Processing*, vol. 57, no. 12, pp. 4970–4973 (Dec. 2009).
Bensmida, S. et al., "Extending the Characterization Bandwidth of Dynamic Nonlinear Transmitters With Application to Digital Predistortion," *IEEE Transactions on Microwave Theory and Techniques*, vol. 64, no. 8, pp. 2640-2651 (Aug. 2016).
Birafane, A. et al., "Analyzing LINC Systems," *IEEE Microwave Magazine*, vol. 11, no. 5, pp. 59-71 (Aug. 2010).
Boumaiza, S. et al., "On the Wireless Transmitters Linear and Nonlionear Distortions Detection and Pre-Correction," *2006 Canadian Conference on Electrical and Computer Engineering*, pp. 1510-1513 (2006).
Boumaiza, S. et al., "Systematic and Adaptive Characterization Approach for Behavior Modeling and Correction of Dynamic Nonlinear Transmitters," *IEEE Transactions on Instrumentation and Measurement*, vol. 56, no. 6, pp. 2203-2211 (Dec. 2007).
Boumaiza, Slim et al., "Adaptive digital/RF predistortion using a nonuniform LUT indexing function with built-in dependence on the amplifier nonlinearity," *IEEE Transactions on Microwave Theory and Techniques*, pp. 2670-2677 (2004).
Braithwaite, R. et al, "Data acquisition for digital-controlled adaptive analog predistortion of a power amplifier," *2007 IEEE Radio and Wireless Symposium* (2007).
Cao, H. et al., "Digital Predistortion for High Efficiency Power Amplifier Architectures Using a Dual-Input Modeling Approach," *IEEE Transactions on Microwave Theory and Techniques*, vol. 60, no. 2, pp. 361-369 (Feb. 2012).
Cao, W. et al., "Clipping-and-inverse-filtering Technique for Concurrent Multiband Transmitters," pp. 1-3 (2020).
Cavers, J., "Amplifier linearization using a digital predistorter with fast adaptation and low memory requirements," *IEEE Transactions on Vehicular Technology*, vol. 39, no. 4, pp. 374-382 (Nov. 1990).
Celka, P., "Analysis and linearization of a broadband microwave phase modulator using Volterra system approach," *IEEE Transactions on Microwave Theory and Techniques*, vol. 44, no. 12, pp. 2246-2255 (Dec. 1996).
Cendrillon, R. et al., "A near-optimal linear crosstalk precoder for VDSL," (2004).

Cendrillon, R. et al., "Improved linear crosstalk precompensation for DSL," *2004 IEEE International Conference on Acoustics, Speech, and Signal Processing*, vol. 4 (2004).
Cendrillon, R. et al., "Partial crosstalk precompensation in downstream VDSL," *Signal Processing*, vol. 84, pp. 2005-2019 (2004).
Cendrillon, R. et al., "The linear zero-forcing crosstalk canceler is near-optimal in DSL channels," *IEEE Global Telecommunications Conference, 2004*, vol. 4 (2004).
Ceylan, N., "Linearization of power amplifiers by means of digital predistortion," (2005).
Chehrenegar, P. et al., "Design and characterization of a highly linear 3 GHz GaN HEMT amplifier," *2011 Workshop on Integrated Nonlinear Microwave and Millimetre-Wave Circuits*, pp. 1-4 (2011).
Chen, W. et al., "A Concurrent Dual-Band Uneven Doherty Power Amplifier with Frequency-Dependent Input Power Division," *IEEE Transactions on Circuits and Systems I: Regular Papers*, vol. 61, no. 2, pp. 552-561 (Feb. 2014).
Chen, W. et al., "Doherty PAs for 5G Massive MIMO: Energy-Efficient Integrated DPA MMICs for Sub-6-GHz and mm-Wave 5G Massive MIMO Systems," *IEEE Microwave Magazine*, vol. 21, no. 5, pp. 78-93 (May 2020).
Cidronali, A. et al., "A new approach for concurrent Dual-Band IF Digital PreDistortion: System design and analysis," *2008 Workshop on Integrated Nonlinear Microwave and Millimetre-Wave Circuits*, pp. 127-130 (2008).
D'Andrea, A. et al., "Parallel amplitude and phase predistortion for RF power amplifier linearization," *Proceedings of GLOBECOM '95*, vol. 1, pp. 198-202 (1995).
D'Andrea, A. et al., "RF power amplifier linearization through amplitude and phase predistortion," *IEEE Transactions on Communications*, vol. 44, no. 11, pp. 1477-1484, (Nov. 1996).
Darraji, R. et al., "Digital Doherty amplifier with complex gain compensation apparatus," *Asia-Pacific Microwave Conference 2011*, pp. 122-126 (2011).
De Mingo, J. et al., "Amplifier linearization using a new digital predistorter for digital mobile radio systems," *1997 IEEE 47th Vehicular Technology Conference. Technology in Motion*, vol. 2. (1997).
Di Benedetto, M. et al., "A new analog predistortion criterion with application to high efficiency digital radio links," *IEEE Transactions on Communications*, vol. 43, no. 12, pp. 2966-2974 (Dec. 1995).
Di Benedetto, M. et al., "An application of MMSE predistortion to OFDM systems," *IEEE Transactions on Communications*, vol. 44, no. 11, pp. 1417-1420 (Nov. 1996).
"Digital Predistortion Reference Design," Altera Corporation (July 2003).
Di Zenobio, D. et al., "Adaptive linearization of power amplifier in orthogonal multicarrier schemes," *IEEE Wireless Communication System Symposium*, pp. 225-230 (1995).
Ding, L., "Digital predistortion of power amplifiers for wireless applications," *Georgia Institute of Technology* (2004).
Djamai, M. et al., "Behavioral modeling and digital predistortion of RF power amplifiers," *2006 International Workshop on Integrated Nonlinear Microwave and Millimeter-Wave Circuits* (2006).
Dobrowiecki, T. et al., "Robustness of the related linear dynamic system estimates in cascaded nonlinear MIMO systems," *2006 IEEE Instrumentation and Measurement Technology Conference Proceedings* (2006).

Durukal, M., “Power Amplifier Linearization By Predistortion” *Bilkent Universitesi* (2006).
Fager, C. et al., "Analysis of nonlinear distortion in phased array transmitters," *2017 Integrated Nonlinear Microwave and Millimetre-wave Circuits Workshop (INMMiC)*, pp. 1-4 (2017).
Faulkner, M. et al., "Adaptive linearization using predistortion-experimental results," *IEEE Transactions on Vehicular Technology*, vol. 42, pp. 323-332 (1994).
Franco, M., et al. "Reduction of in-band intermodulation distortion products in radio frequency power amplifiers with digital predistortion linearization," *2006 IEEE MTT-S International Microwave Symposium Digest* (2006).
Fu, Y. et al., "Transmitter precoding for ICI reduction in closed-loop MIMO OFDM systems," *IEEE Transactions on Vehicular Technology*, vol. 56, pp. 115-125 (2007).
Ghaderi, M. et al., "Power Amplifier Adaptive Linearization Using Predistortion with Polynomial Functions," *1992 22nd European Microwave Conference*, pp. 1125-1130 (1992).
Ghannouchi, F., "Power amplifier and transmitter architectures for software defined radio systems," *IEEE Circuits and Systems Magazine*, vol. 10, no. 4, pp. 56-63 (2010).
Gregorio, F. et al., "Power amplifier linearization technique with IQ imbalance and crosstalk compensation for broadband MIMO-OFDM transmitters," *EURASIP Journal on Advances in Signal Processing*, pp. 1-15 (2011).
Gregorio, F. et al., "Receiver cancellation technique for nonlinear power amplifier distortion in SDMA–OFDM systems," *IEEE Transactions on Vehicular Technology*, vol. 56, 2499-2516 (2007).
Gupta, R. et al., "Adaptive digital baseband predistortion for RF power amplifier linearization," High Frequency Electronics, vol. 56, pp. 16-25 (2006).
Haber, R. et al., “Structure identification of nonlinear dynamic systems - A survey on input/output approaches,” *Autom.*, vol. 26, pp. 651-677 (1990).
Hammi, O. et al., "A Digital Predistortion System With Extended Correction Bandwidth With Application to LTE-A Nonlinear Power Amplifiers. Circuits and Systems I: Regular Papers," *IEEE Transactions*, pp. 3487-3495 (2014).
Hammi, O. et al., "On the Robustness of the Predistortion Function Synthesis for Highly Nonlinear RF Power Amplifiers Linearization," *2006 European Microwave Conference*, pp. 145-148 (2006).
Hammi, O., "Linearization by digital predistortion in subbands of a S-band transmitter for 3G cellular applications," (2004).
Hammi, O., "Linéarisation par prédistorsion numérique en sous bandes d'un transmetteur en bande S pour les applications cellulaires de 3G," *Polytechnique Montréal* (2004).
Helaoui, M. et al., "Reconfigurable platform for software/hardware co-design of SDR base band pre-processing module," *2006 12th International Symposium on Antenna Technology and Applied Electromagnetics and Canadian Radio Sciences Conference*, pp. 1-4 (2006).
Helaoui, M. et al., "Short term memory effects study for optimal predistortion-based linearization of base-stations wireless transmitters," *2006 Asia-Pacific Microwave Conference*, pp. 1044-1047 (2006).
Hilborn, D. et al., "An adaptive direct conversion transmitter," *IEEE Transactions on Vehicular Technology*, vol. 43, pp. 223-233 (1994).
Howard, A., "Applications of an envelope simulator," *52nd ARFTG Conference Digest. Automatic RF Techniques Group. Computer-Aided Design and Test for High-Speed Electronics (IEEE Cat. No. 98EX245)* (1998).

Hsu, C. et al., "Joint estimation and compensation of transmitter and receiver radio impairments in MIMO-OFDM receivers," *2009 IEEE 20th International Symposium on Personal, Indoor and Mobile Radio Communications* (2009).
Izadpanah, H. et al. "Subscriber unit transmitter power amplifier prototype and simulation for personal access communications system (PACS)," *1997 IEEE MTT-S Symposium on Technologies for Wireless Applications Digest* (1997).
Jeckeln, E. et al., "A new adaptive predistortion technique using software-defined radio and DSP technologies suitable for base station 3G power amplifiers," *IEEE Transactions on Microwave Theory and Techniques*, vol. 52, no. 9, pp. 2139-2147 (Sept. 2004).
Jeckeln, E. et al., "Linearization of microwave emitters using an adaptive digital predistorter," *1997 27th European Microwave Conference*, vol. 1 (1997).
Jeruchim, M. et al., "Modeling and Simulation of Nonlinear Systems," *Simulation of Communication Systems: Modeling, Methodology, and Techniques*, pp. 203-287 (2002).
Jiang, H. et al., "Digital predistortion for power amplifiers using separable functions," *IEEE Transactions on signal processing*, vol. 58, pp. 4121-4130 (2010).
Joshin, K. et al. "Harmonic Feedback Circuit Effects on Intermodulation Products and Adjacent Channel Leakage Power in HBT Power Amplifier for 1. 95 GHz Wide-Band CDMA Cellular Phones," *IEICE transactions on electronics*, vol. 82, pp. 725-729 (1999).
Jung, C. et al., "Implementation of a linearized power amplifier using the predistorter and direct conversion technique," *Proceedings of ICCS'94*, vol. 1 (1994).
Kang, H. et al., "An efficient adaptive predistorter for nonlinear high power amplifier in satellite communication," *1997 IEEE International Symposium on Circuits and Systems (ISCAS)*, vol.4, pp. 2288-2291 (1997).
Kim, J. et al., "Design of a Volterra series-based nonlinear compensator," *Proceedings of the IEEE Signal Processing Workshop on Higher-Order Statistics*, pp. 127-131 (1997).
Kusunoki, S. et al., "Power-amplifier module with digital adaptive predistortion for cellular phones," *IEEE Transactions on Microwave Theory and Techniques*, vol. 50, no. 12, pp. 2979-2986 (Dec. 2002).
Kwan, A. et al., "Automating the Verification of SDR Base band Signal Processing Algorithms Developed on DSP/FPGA Platform," *2006 IEEE Workshop on Signal Processing Systems Design and Implementation*, pp. 5-9 (2006).
Kwan, A. et al., "Concurrent Multi-Band Envelope Modulated Power Amplifier Linearized Using Extended Phase-Aligned DPD," IEEE Transactions on Microwave Theory and Techniques, vol. 62, no. 12, pp. 3298-3308 (Dec. 2014).
Landin, P. et al., "A Study of memory effects of RF power LDMOS before and after digital predistortion," *2009 IEEE 10th Annual Wireless and Microwave Technology Conference*, pp. 1-5 (2009).
Leulescu, O. et al., "A New Digital Predistorton Method For Power Amplifiers Linearization," *IEEE Proceedings of the GeMiC 2005* (2005).
Levy, Y. et al., "Adaptation of a digital predistortion technique based on intersymbol interpolation," *Proceedings of GLOBECOM '95*, vol.1, pp. 145-150 (1995).
Li, H. et al., "A Fast Digital Predistortion Algorithm for Radio-Frequency Power Amplifier Linearization with Loop Delay Compensation," *IEEE Journal of Selected Topics in Signal Processing*, vol. 3, no. 3 (June 2009).

Li, Y., "E-band radios for LTE/LTE-Advanced mobile backhaul," *2010 Workshop on Integrated Nonlinear Microwave and Millimeter-Wave Circuits*, pp. 84-84 (2010).
Lin, Y. et al., "A new iterative algorithm for finding the minimum sampling frequency of multiband signals," *IEEE Transactions on Signal Processing*, vol. 58, pp. 5446-5450 (2010).
Liu, T. et al., "Behavior modeling procedure of wideband RF transmitters exhibiting memory effects," *IEEE MTT-S International Microwave Symposium Digest* (2005).
Liu, T. et al., "Deembedding static nonlinearities and accurately identifying and modeling memory effects in wide-band RF transmitters," *IEEE transactions on microwave theory and techniques*, vol. 53, pp. 3578-3587 (2005).
Liu, T. et al., "Dynamic behavioral modeling of 3G power amplifiers using real-valued time-delay neural networks," *IEEE Transactions on Microwave Theory and Techniques*, vol. 52, pp. 1025-1033 (2004).
Liu, T. et al., "Pre-compensation for the dynamic nonlinearity of wideband wireless transmitters using augmented Wiener predistorters," *2005 Asia-Pacific Microwave Conference Proceedings*, vol. 5 (2005).
Liu, T. et al., "Rapid behavior modeling platform for RF power amplifiers/transmitters," *2008 International Conference on Microwave and Millimeter Wave Technology*, vol. 2 (2008).
Liu, T. et al., "Deembedding Static Nonlinearities and Accurately Identifying and Modeling Memory Effects in Wide-Band Transmitters," IEEE Transactions on Microwave Theory and Techniques, vol. 53, no. 11 (Nov. 2005).
Liu, T. et al., "An integrated nonlinear behavior modeling system for RF power amplifiers/transmitters," *2007 70th ARFTG Microwave Measurement Conference (ARFTG)* (2007).
Liu, T. et al., "Accurate identification of static nonlinear properties of wideband RF power amplifiers," *2008 International Conference on Microwave and Millimeter Wave Technology*, pp. 1351-1135 (2008)
Liu, X. et al., "Multi-Stream Spatial Digital Predistortion for Fully-Connected Hybrid Beamforming Massive MIMO Transmitters," *IEEE Transactions on Circuits and Systems I: Regular Papers*, vol. 68, no. 7, pp. 2998-3011 (July 2021).
Liu, X. et al., "Beam-Oriented Digital Predistortion for 5G Massive MIMO Hybrid Beamforming Transmitters," *IEEE Transactions on Microwave Theory and Techniques*, vol. 66, no. 7, pp. 3419-3432 (July 2018).
Lohtia, A. et al., "Adaptive digital linearization of RF power amplifiers," *Canadian Journal of Electrical and Computer Engineering*, vol. 20, no. 2, pp. 65-71 (April 1995).
Lohtia, A. et al., "An adaptive digital technique for RF power amplifier linearization for cellular radio" (1993).
Lv, G. et al., "A 4.9–7.1-GHz High-Efficiency Post-Matching GaN Front-End Module for Wi-Fi 7 Application," *IEEE Journal of Solid-State Circuits*, vol. 59, no. 2, pp. 400-413 (Feb. 2024).
Lv, G. et al., "A Highly Linear GaN MMIC Doherty Power Amplifier Based on Phase Mismatch Induced AM–PM Compensation," *IEEE Transactions on Microwave Theory and Techniques*, vol. 70, no. 2, pp. 1334-1348 (Feb. 2022).
Malkemes, R.,l et al., "InP HBT for portable wireless radio technologies," *Proceedings of PIMRC'96-7th International Symposium on Personal, Indoor, and Mobile Communications*, vol. 1 (1996).

Mansell, A. et al., "Practical implementation issues for adaptive predistortion transmitter linearization," *IEE Colloquium on Linear RF Amplifiers and Transmitters* (1994).
Marmarelis, V., Nonlinear dynamic modeling of physiological systems," vol. 10 (2004).
Mato, J. et al. "Reduction of intermodulation effects in power amplifiers through segmented predistortion," *2007 IEEE International Symposium on Industrial Electronics* (2007).
Morris, K. et al., "Power amplifier linearisation using predistortion techniques," *IEE Colloquium on RF and Microwave Components for Communication Systems(Digest No: 1997/126)*, pp. 6/1-6/6 (1997).
Nakayama, M. et al., "A novel amplitude and phase linearizing technique for microwave power amplifiers," *Proceedings of 1995 IEEE MTT-S International Microwave Symposium*, vol. 3, pp. 1451-1454 (1995).
Negra, R. et al., "Compact device-level linearisation technique using a reduced complexity derivative superposition approach," *2006 Asia-Pacific Microwave Conference*, pp. 1739-1742 (2006).
Nizamuddin, M., "Predistortion for nonlinear power amplifiers with memory," *Diss. Virginia Tech* 2002.
Othmani, M. et al., "Delta-Sigma Modulator-Embedded Digital Predistortion for 5G Transmitter Linearization," *IEEE Transactions on Communications*, vol. 70, no. 8, pp. 5558-5571 (Aug. 2022).
Pages-Zamora, A. et al., "Memoryless predistortion of nonlinear amplifiers based on Fourier series based models," *Proceedings of 8th Workshop on Statistical Signal and Array Processing*, pp. 375-378 (1996).
Palaskas, Y. et al., "A 5-GHz 108-Mb/s 2x2 MIMO Transceiver RFIC With Fully Integrated 20.5-dBm P1dB Power Amplifiers in 90-nm CMOS," *IEEE Journal of Solid-State Circuits*, Vol. 41, No. 12, (Dec. 2006).
Park, I. et al., "A New Predistorter Design Technique For Nonlinear Digital Communication Channels," *Fourth International Symposium on Signal Processing and Its Applications*, pp. 618-621 (1996).
Park, I. et al., "An adaptive predistorter for high power amplifiers," *Conference Record of the Thirty-First Asilomar Conference on Signals, Systems and Computers (Cat. No.97CB36136)*, vol. 1, pp. 8-12 (1997).
Park, I. et al., "Parallel adaptive predistortion for RF power amplifier linearization," *GLOBECOM 97. IEEE Global Telecommunications Conference.*, vol. 1, pp. 82-86 (1997),
Park, Y. et al., "Adaptive digital predistortion linearization of frequency multipliers," *IEEE transactions on microwave theory and techniques* 51.12 (2003): 2516-2522.
Pearson, R. K., "Selecting nonlinear model structures for computer control." Journal of process control 13.1 (2003): 1-26.
Quaglia, R. et al., "7 GHz GaN MMIC power amplifier for Microwave Radio links with 45% drain efficiency in a wide power range," *2010 Workshop on Integrated Nonlinear Microwave and Millimeter-Wave Circuits*, pp. 160-163 (2010).
Rawat, K. et al., "Dual-Band RF Circuits and Components for Multi-Standard Software Defined Radios," *IEEE Circuits and Systems Magazine*, vol. 12, no. 1, pp. 12-32 (2012).
Rawat, K. et al., "Investigating effects of quadrature imperfection of vector multiplier in implementing RF/Digital predistortion," *2009 IEEE 10th Annual Wireless and Microwave Technology Conference*, pp. 1-4 (2009).

Rawat, M. et al., "A Mutual Distortion and Impairment Compensator for Wideband Direct-Conversion Transmitters Using Neural Networks," *IEEE Transactions on Broadcasting*, vol. 58, no. 2, pp. 168-177 (June 2012).
Rawat, M. et al., "Adaptive Digital Predistortion of Wireless Power Amplifiers/Transmitters Using Dynamic Real-Valued Focused Time-Delay Line Neural Networks," *IEEE Transactions on Microwave Theory and Techniques*, vol. 58, no. 1, pp. 95-104 (Jan. 2010).
Rawat, M. et al., "Distributed Spatiotemporal Neural Network for Nonlinear Dynamic Transmitter Modeling and Adaptive Digital Predistortion," *IEEE Transactions on Instrumentation and Measurement*, vol. 61, no. 3, pp. 595-608 (March 2012).
Rawat, M. et al., "Generalized Rational Functions for Reduced-Complexity Behavioral Modeling and Digital Predistortion of Broadband Wireless Transmitters," *IEEE Transactions on Instrumentation and Measurement*, vol. 63, no. 2, pp. 485-498 (Feb. 2014).
Rebai, C. et al., "Optimized Design of a Digital IQ Demodulator Suitable for Adaptive Predistortion of 3rd Generation Base Station PAs," *2006 13th IEEE International Conference on Electronics, Circuits and Systems*, pp. 573-576 (2006).
Sevic, J. et al., "Simulation of power amplifier adjacent-channel power ratio for digital wireless communication systems," *1997 IEEE 47th Vehicular Technology Conference. Technology in Motion*, vol. 2. (1997).
Shah, A. et al., "Adaptive equalisation for broadband predistortion linearisation of optical transmitters," *IEE Proceedings-Optoelectronics*, vol. 152, pp. 16-32 (2005).
Shan, W. et al., "Effects of anti-aliasing filters in feedback path of adaptive predistortion," *2002 IEEE MTT-S International Microwave Symposium Digest (Cat. No.02CH37278)*, vol. 1, pp. 469-472 (2002).
Shan, W. et al., "Spectral sensitivity of predistortion linearizer architectures to filter ripple," *IEEE 54th Vehicular Technology Conference. VTC Fall 2001. Proceedings (Cat. No.01CH37211)*, vol. 3, pp. 1570-1574 (2001).
Shenouda, M., et al., "Minimum SER zero-forcing transmitter design for MIMO channels with interference pre-subtraction," *2007 IEEE 65th Vehicular Technology Conference-VTC2007-Spring* (2007).
Shi, B. et al., "Effects of Look-Up Table Size on Adaptive Predistortion Linearizer Systems with Error Sources," *2003 33rd European Microwave Conference*, pp. 1231-1234 (2003).
Simeone, O. et al., "Linear and nonlinear preequalization/equalization for MIMO systems with long-term channel state information at the transmitter," *IEEE transactions on wireless communications*, vol. 32, pp. 373-378 (2004).
Stapleton, S.P. et al., "An Adaptive Predistortion System," *IEEE* (2002).
Sundstrom, L. et al., "Effects of reconstruction filters in digital predistortion linearizers for RF power amplifiers," *IEEE Transactions on Vehicular Technology*, vol. 44, no. 1, pp. 131-139 (Feb. 1995).
Sundstrom, L. et al., "Quantization analysis and design of a digital predistortion linearizer for RF power amplifiers," *IEEE Transactions on Vehicular Technology*, vol. 45, no. 4, pp. 707-719 (Nov. 1996).
Teikari, I., "Digital Predistortion Linearization Methods for RF Power Amplifiers," *Helsinki University of Technology* (2008).
Tsimbinos, J. et al., "Nonlinear compensation using orthogonal inverses: broadband inputs and robustness issues," *Proceedings of Digital Processing Applications (TENCON '96)*, vol. 2, pp. 816-821(1996).

Van Zelst, A. et al., "A single coefficient spatial correlation model for multiple-input multiple-output (MIMO) radio channels," *Proc. 27th General Assembly of the Int. Union of Radio Science (URSI)* (2002).
Walker, A., "Behavioral modeling and characterization of nonlinear operation in RF and microwave systems," *North Carolina State University* (2006).
Wang, T. et al., "Compensation of nonlinear distortions with memory effects in OFDM transmitters," *IEEE Global Telecommunications Conference, 2004. GLOBECOM'04,* vol. 4 (2004).
Wang, Z. et al., "Low Feedback Sampling Rate Digital Predistortion for Wideband Wireless Transmitters," *IEEE Transactions on Microwave Theory and Techniques*, vol. 64, no. 11, pp. 3528-3539 (Nov. 2016).
Watkins, B. et al., "Neural network based adaptive predistortion for the linearization of nonlinear RF amplifiers," *Proceedings of MILCOM '95*, vol. 1 pp. 145-149 (1995).
Watkins, B. et al., "Predistortion of nonlinear amplifiers using neural networks," *Proceedings of MILCOM '96 IEEE Military Communications Conference*, vol. 1, pp. 316-320 (1996).
Widrow, B. et al., "Adaptive inverse control based on linear and nonlinear adaptive filtering," *IEEE Proceedings of International Workshop on Neural Networks for Identification, Control, Robotics and Signal/Image Processing* (1996).
Windpassinger, C. et al., "Precoding in multiantenna and multiuser communications," *IEEE Transactions on Wireless Communications*, vol. 3, pp. 1305-1316 (2004).
Woo, Y.Y. *et al*., "Adaptive Digital Feedback Predistortion Technique for Linearizing Power Amplifiers," *IEEE Transactions on Microwave Theory and Techniques*, vol. 55, no. 5, pp. 932-940 (May 2007).
Zavosh, F. et al. "Digital predistortion techniques for RF power amplifiers with CDMA applications," *Microwave Journal*, vol. 42 (1999).
Zayani, R. et al., "Levenberg-Marquardt learning neural network for adaptive predistortion for time-varying HPA with memory in OFDM systems," IEEE 2008 16th European Signal Processing Conference (2008).
Zhu, A. et al. "Open-loop digital predistorter for RF power amplifiers using dynamic deviation reduction-based Volterra series," *IEEE Transactions on microwave theory and techniques*, vol. 56, no. 7, pp. 1524-1534 (2008).
Zhurbenko, V., "Advanced microwave circuits and systems," *BoD–Books on Demand* (2010).
Zou, Q. et al., "On the joint compensation of IQ imbalances and phase noise in MIMO-OFDM systems," *2007 IEEE International Symposium on Circuits and Systems (ISCAS)* (2007).
Products and Systems
Nokia Products embodying the disclosure from U.S. Patent No. 7,415,252 to Jelonnek et al. (as early as 2004).
Nokia Products embodying the disclosure from, *e.g.*, EP2040375 to Jelonnek (as early as 2007)
Nokia Products using Mera or Gaia Digital Front End Radio Chips (as early as 2004).
Altera Corporation Digital Predistortion Linear Transmitter (as early as 2003).
Ericsson's HC DPD, and any similar systems (as early as 2005)
Ericsson's RU22-2140 FPGA, and any similar systems (as early as 2006)

Ericsson's RUW01 DPD FPGA, and any similar systems (as early as 2010)

Dated: March 31, 2025 By: /s/ *Jacob K. Baron*

Jacob K. Baron, Esq.
MA Bar No.: 652568
Email: jacob.baron@hklaw.com
Joshua C. Krumholz, Esq.
(LEAD COUNSEL)
(Pro hac vice)
MA Bar No.: 552573
Email: joshua.krumholz@hklaw.com
Jacob W. S. Schneider, Esq.
(Pro hac vice)
MA Bar No.: 675315
Email: jacob.schneider@hklaw.com
Allison M. Lucier, Esq.
(Pro hac vice)
MA Bar No.: 569193
Email: allison.lucier@hklaw.com
HOLLAND & KNIGHT LLP
10 Saint James Avenue; 11th Floor
Boston, MA 02116
Telephone: 617-523-2700
Facsimile: 617-523-6850

Matthew S. Yungwirth
msyungwirth@duanemorris.com
Glenn D. Richeson
gdricheson@duanemorris.com
DUANE MORRIS LLP
1075 Peachtree St, Ste. 1700
Atlanta, GA. 30309-3929
Telephone: 404-253-6900
Facsimile: 404-253-6901

Deron R. Dacus
Texas Bar No. 00790553
E-mail: ddacus@dacusfirm.com
THE DACUS FIRM, P.C.
821 ESE Loop 323, Suite 430
Tyler, Texas 75701
903-705-1117 (phone)
903-581-2543 (fax)

Attorneys for Defendants AT&T Mobility LLC, Cellco Partnership d/b/a Verizon Wireless and T-Mobile USA, Inc.

CERTIFICATE OF SERVICE

The undersigned hereby certifies that a true and correct copy of the foregoing document was served on Plaintiff Smart RF via electronic mail on March 31, 2025.

/s/ Jacob K. Baron
Jacob K. Baron