US009641204B2

(12) **United States Patent**
Ghannouchi et al.

(10) **Patent No.: US 9,641,204 B2**
(45) **Date of Patent: May 2, 2017**

(54) **DIGITAL MULTI-BAND PREDISTORTION LINEARIZER WITH NONLINEAR SUBSAMPLING ALGORITHM IN THE FEEDBACK LOOP**

(71) Applicant: **Fadhel M. Ghannouchi**, Calgary (CA)

(72) Inventors: **Fadhel M. Ghannouchi**, Calgary (CA); **Seyed Aiden Bassam**, Calgary (CA); **Mohamed Helaoui**, Calgary (CA); **Andrew Kwan**, Calgary (CA)

(*) Notice: Subject to any disclaimer, the term of this patent is extended or adjusted under 35 U.S.C. 154(b) by 0 days.

(21) Appl. No.: **14/467,642**

(22) Filed: **Aug. 25, 2014**

(65) **Prior Publication Data**

US 2015/0236731 A1 Aug. 20, 2015

Related U.S. Application Data

(63) Continuation of application No. 13/274,290, filed on Oct. 14, 2011, now Pat. No. 8,817,859.

(51) **Int. Cl.**
H04L 25/03 (2006.01)
H04B 1/04 (2006.01)

(52) **U.S. Cl.**
CPC ***H04B 1/0475*** (2013.01); ***H04L 25/03343*** (2013.01); *H04B 2001/0425* (2013.01); *H04L 2025/03356* (2013.01)

(58) **Field of Classification Search**
CPC H03F 3/189; H04L 25/03
USPC 375/296
See application file for complete search history.

(56) **References Cited**

U.S. PATENT DOCUMENTS

8,294,516	B2 *	10/2012	Young et al.	330/149
8,391,809	B1 *	3/2013	Fuller	455/114.3
8,606,197	B2 *	12/2013	Bai	455/114.3
2005/0162225	A1 *	7/2005	Suzuki	H03F 1/3241 330/149
2005/0168283	A1 *	8/2005	Suzuki et al.	330/149
2006/0276147	A1 *	12/2006	Suzuki et al.	455/114.3
2011/0156815	A1 *	6/2011	Kim et al.	330/149
2012/0154038	A1 *	6/2012	Kim et al.	330/149

* cited by examiner

Primary Examiner — Jaison Joseph
(74) *Attorney, Agent, or Firm* — Kevin Pillay

(57) **ABSTRACT**

A concurrent multi-band linearized transmitter (CMLT) has a concurrent digital multi-band predistortion block (CDMPB) and a concurrent multi-band transmitter (CMT) connected to the CDMPB. The CDMPB can have a plurality of digital baseband signal predistorter blocks (DBSPBs), an analyzing and modeling (A&M) stage, and a signal observation feedback loop. Each DBSPB can have a plurality of inputs, each corresponding to a single frequency band of the multi-band input signal, and its output corresponding to a single frequency band; each output connect corresponding to an input of the CMLT. The A&M stage can have a plurality of outputs connected to and updating the parameters of the DBSPBs, and a plurality of inputs connected to either both outputs of the signal observation loop or the output of the subsampling loop and to outputs of the DBSPBs. The A&M stage can perform signals' time alignment, reconstruction of signals and compute parameters of DBSPBs.

15 Claims, 7 Drawing Sheets

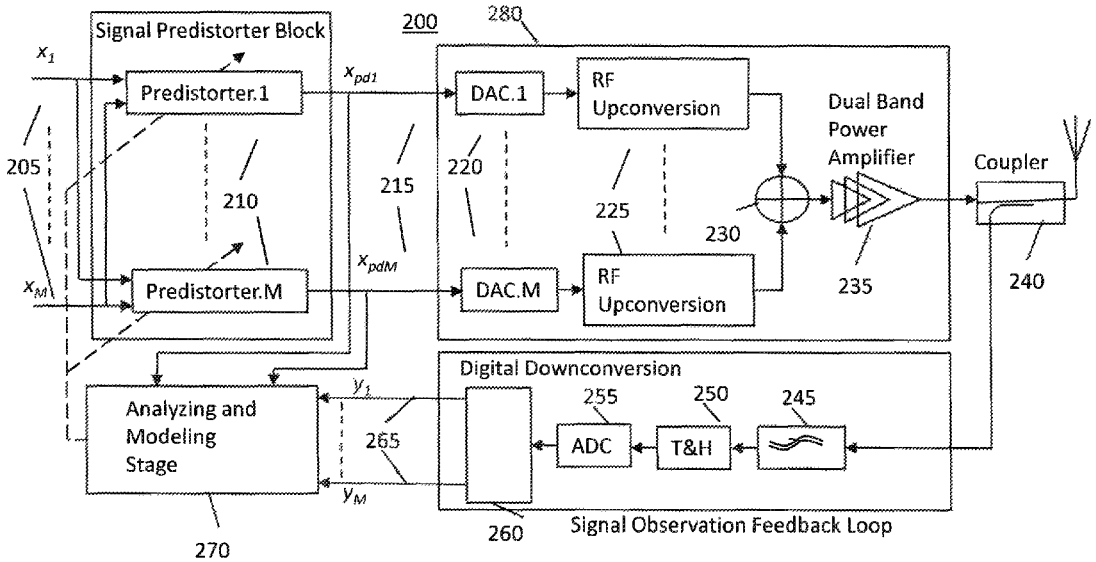

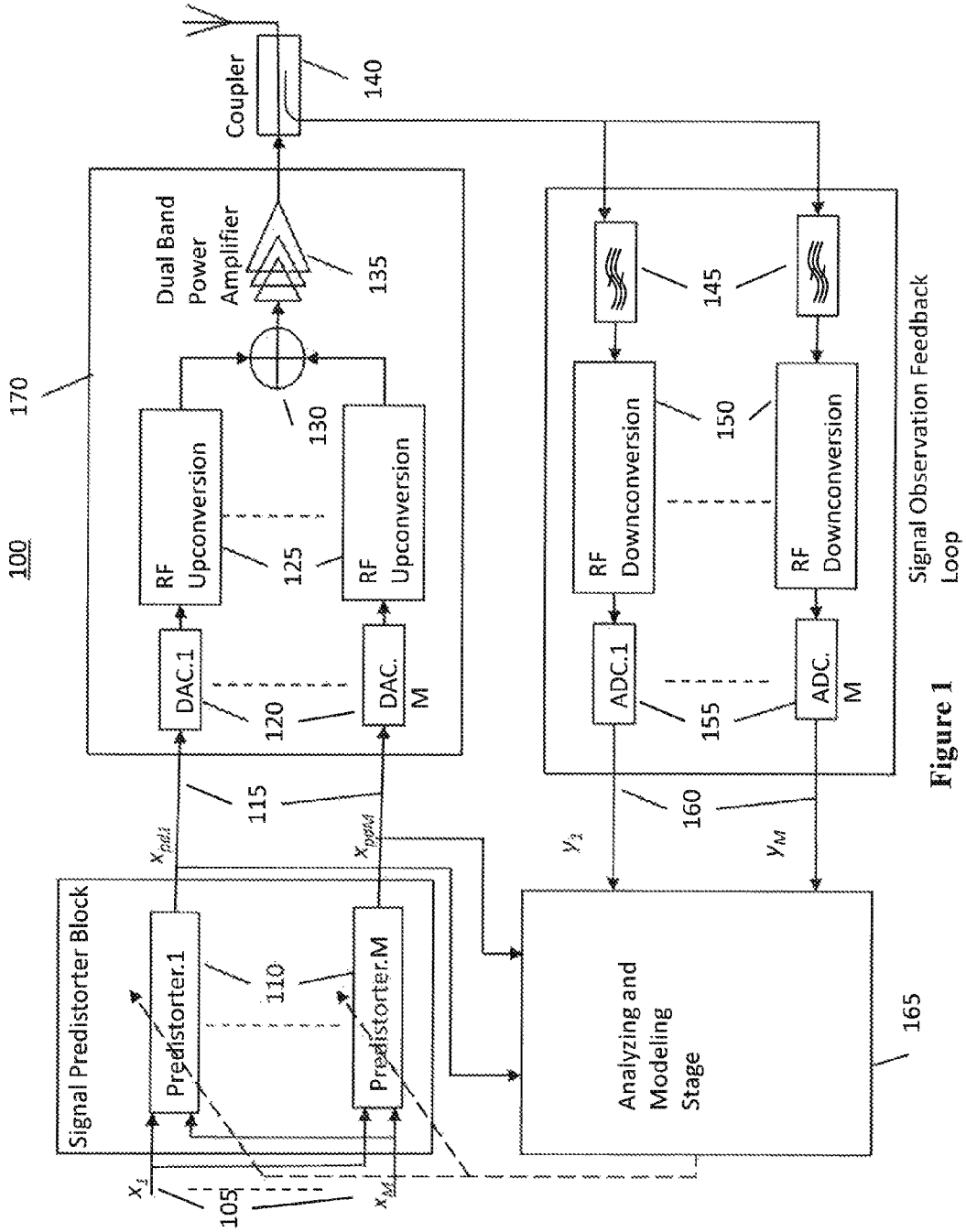
100
170
Coupler
140
Dual Band Power Amplifier
135
130
RF Upconversion
125
RF Upconversion
DAC.1
120
DAC. M
115
Signal Predistorter Block
Predistorter.1
110
Predistorter.M
105
RF Downconversion
145
150
RF Downconversion
ADC.1
155
ADC. M
160
Signal Observation Feedback Loop
Analyzing and Modeling Stage
165

Figure 1

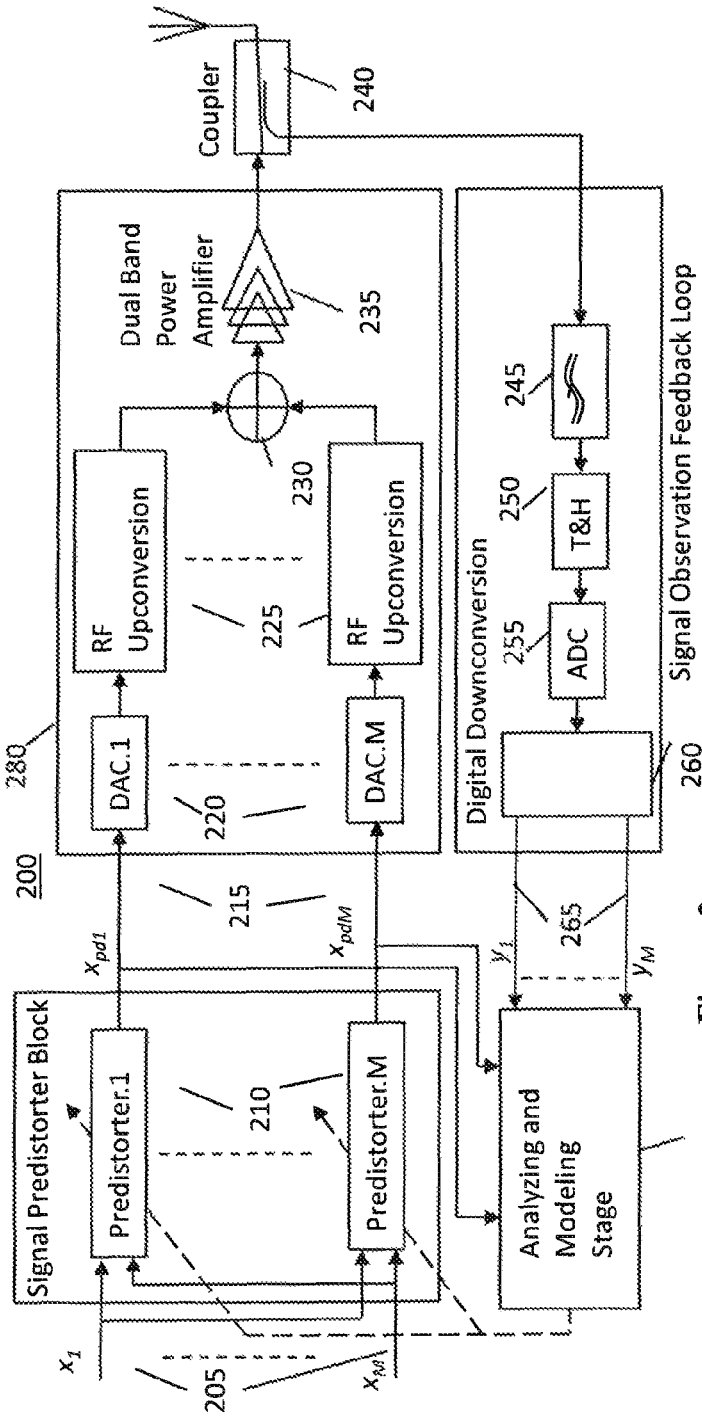

Figure 2

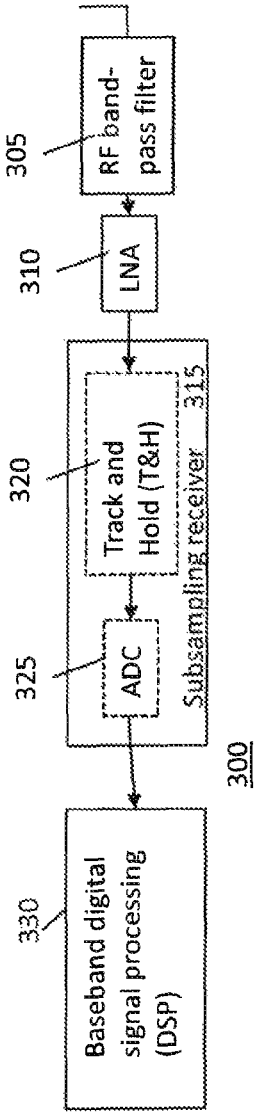

Figure 3

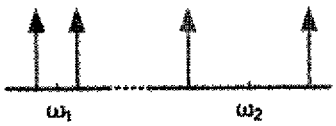

Figure 4A

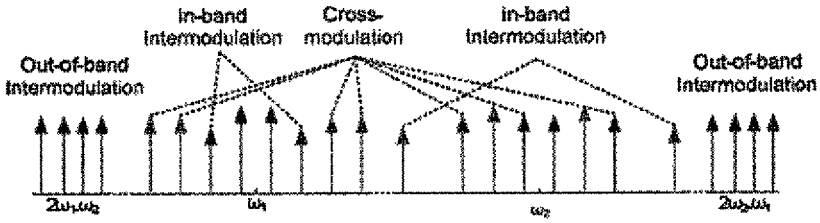

Figure 4B

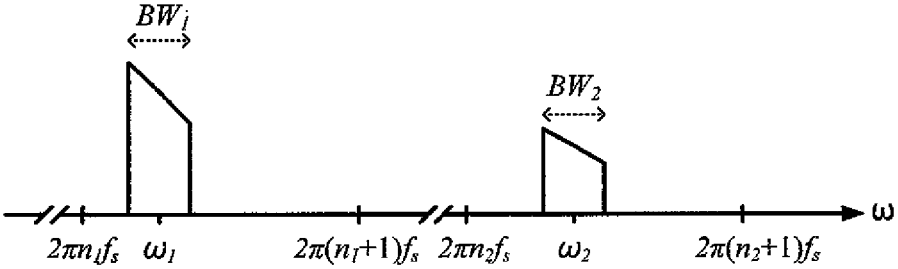

Figure 5

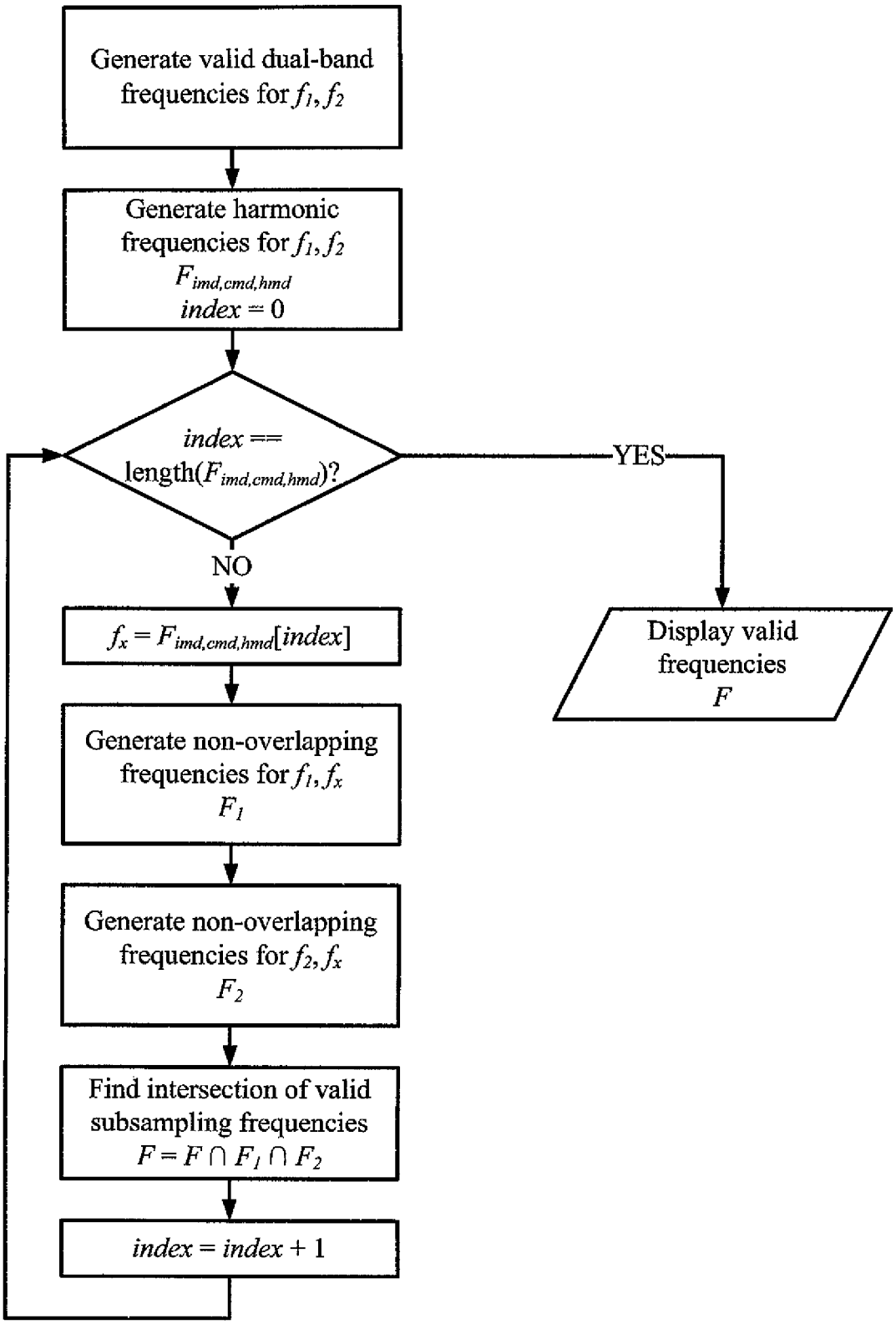
Generate valid dual-band frequencies for f_1, f_2
Generate harmonic frequencies for f_1, f_2
$F_{imd,cmd,hmd}$
$index = 0$
$index == length(F_{imd,cmd,hmd})$?
YES
NO
Display valid frequencies
F
$f_x = F_{imd,cmd,hmd}[index]$
Generate non-overlapping frequencies for f_1, f_x
F_1
Generate non-overlapping frequencies for f_2, f_x
F_2
Find intersection of valid subsampling frequencies
$F = F \cap F_1 \cap F_2$
$index = index + 1$

Figure 6

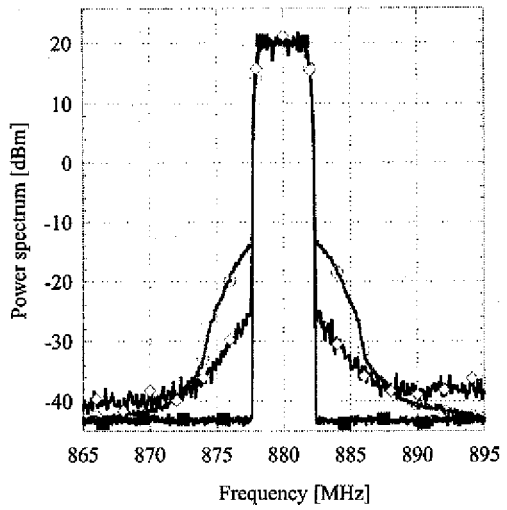

Figure 7A

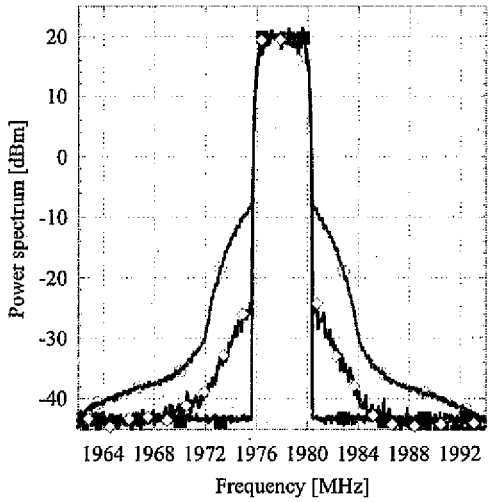

Figure 7B

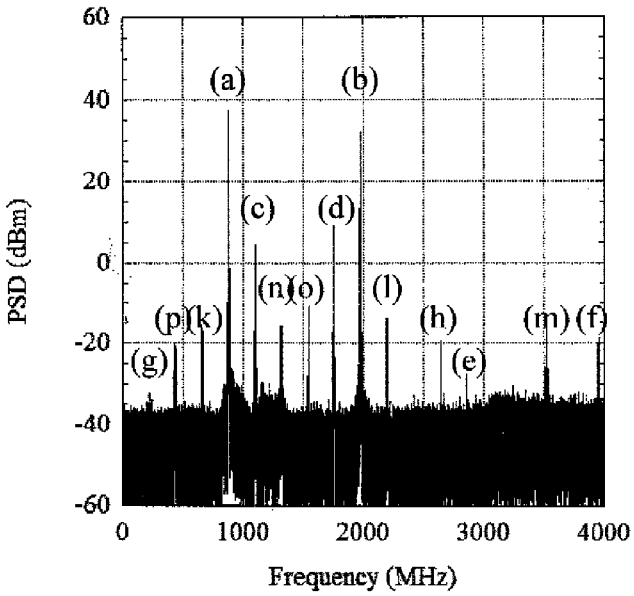

RF SIGNALS AT THE TRANSMITTER OUTPUT

	Harmonic	RF Freq. (MHz)
a	f_1	880
b	f_2	1978
c	$f_2 - f_1$	1098
d	$2f_1$	1760
e	$f_1 + f_2$	2858
f	$2f_2$	3956
g	$f_2 - 2f_1$	218
h	$3f_1$	2640
i	$2f_2 - f_1$	3076
j	$2f_1 + f_2$	3738
k	$3f_1 - f_2$	662
l	$2f_2 - 2f_1$	2196
m	$4f_1$	3520
n	$2f_2 - 3f_1$	1316
o	$4f_1 - f_2$	1542

Figure 8

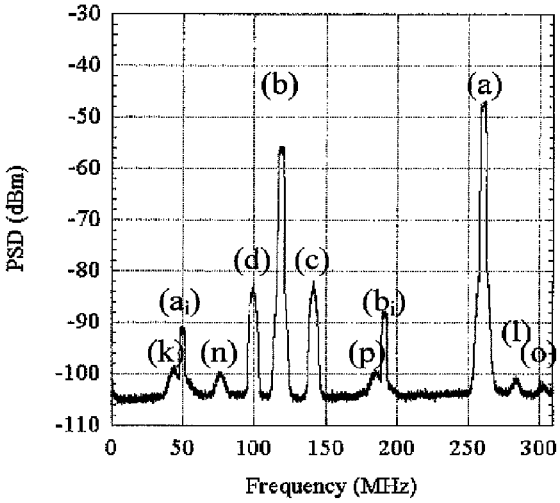

BASEBAND FREQUENCIES USING A SUBSAMPLED FREQUENCY OF 619.8 MHz

	Harmonic	Subsampled Freq. (MHz)
a	f_1	260.20
b	f_2	118.60
c	$f_2 - f_1$	141.60
d	$2f_1$	99.40
e	$f_1 + f_2$	241.00
f	$2f_2$	237.20
g	$f_2 - 2f_1$	218.00
h	$3f_1$	160.80
i	$2f_2 - f_1$	23.00
j	$2f_1 + f_2$	19.20
k	$3f_1 - f_2$	42.20
l	$2f_2 - 2f_1$	283.20
m	$4f_1$	198.80
n	$2f_2 - 3f_1$	76.40
o	$4f_1 - f_2$	302.40

Figure 9

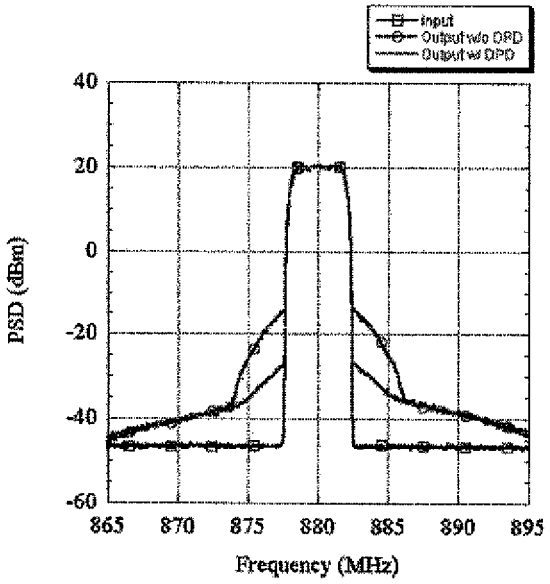

Figure 10A

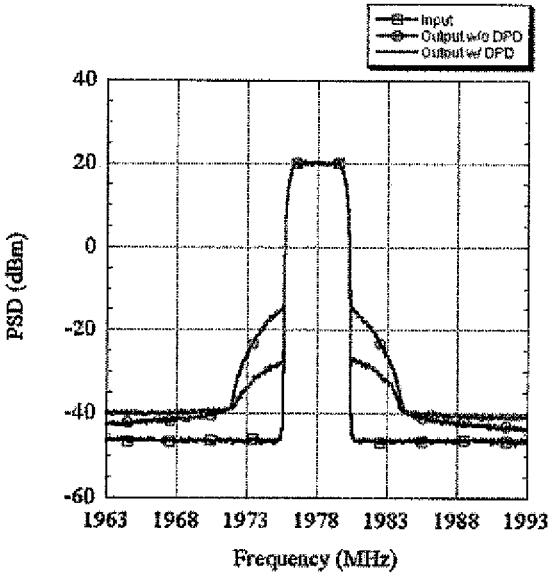

Figure 10B

DIGITAL MULTI-BAND PREDISTORTION LINEARIZER WITH NONLINEAR SUBSAMPLING ALGORITHM IN THE FEEDBACK LOOP

CROSS REFERENCE TO RELATED APPLICATIONS

This application is a Continuation of U.S. Ser. No. 13/274,290 filed Oct. 14, 2011 the entirety of which is incorporated herein by reference.

STATEMENT REGARDING FEDERALLY SPONSORED RESEARCH

Not Applicable.

APPENDIX

Not Applicable.

BACKGROUND OF THE INVENTION

1. Field of the Invention

The present invention relates to multi-band digital predistortion linearization.

2. Related Art

Power-efficient, low-complex, and reconfigurable radio system requires the design of energy-efficient transmitter and receiver architectures. At the transmitter side, the power consumption is mainly dominated by the RF power amplification (PA) unit. Generally, PAs are the most power consuming and the least power efficient components of the RF chain. Moreover, their nonlinear behavior and non-flat frequency response introduce unwanted intermodulation distortions into the system, which could significantly degrade the output signal quality.

An efficient and proper approach to linearize the transmitter nonlinearities, including the frequency up-conversion and power amplification units, is digital predistortion (DPD) linearization technique. The DPD technique is based on developing a reverse model of the nonlinear behavior and predistorted the input signals accordingly in order to compensate for the distortions and nonlinearities introduced by the transmitter.

In dual-band system, the nonlinear behavior of the device will introduce intermodulation, cross modulation, and harmonic products caused by the two fundamental signals. This can be extended to multi-band systems where more than two active signals are transmitted simultaneously.

The linearization of multi-band transmitter is based on the digital predistortion linearization. The DPD technique compensates for the transmitter nonlinearity while operating in the high efficiency and nonlinear region. As an example presented here in this patent, two signal processing blocks are employed to deal and compensate for the unwanted distortions and intermodulation products of the dual-band transmitter. In the scenario of multi-band transmitter (dual-band or more) this processing architecture can be expanded to multiple processing block for linearization and distortion compensation of multi-band transmitter.

In order to obtain samples of the signal from the output of the multi-band system, multi-branch or multi-band down converter is required in the feedback loop. This feedback loop can be developed using multi-band down conversion unit, multi-branch down conversion unit, or using subsampling based down conversion unit.

In one case, an energy-efficient and low-complex subsampling receiver is adopted in the feedback loop of the multi-band linearization architecture. The subsampling receiver architecture is designed to concurrently down-convert the multiple RF signals through single receiver chain. Using subsampling technique simplifies the feedback loop topology, requires fewer number of RF components, and reduces the power consumption.

Substituting the multi-band or multi-branch receiver feedback loop of the linearization topology with subsampling receiver architecture reduces the complexity of the system. The subsampling down conversion is not very common as receivers because of its insufficient performance in the presence of uncontrolled interfering signals. However, in the case of a DPD feedback loop, the problem is different and the interfering signals can be controlled such that they will not affect the signal quality. The different intermodulation, cross modulation and harmonic products make choosing the sampling frequency a complex task in order to avoid any overlap between the down-converted desired signals and their intermodulation and cross modulation products. Therefore, it is imperative to develop an algorithm to select the sampling frequency so that it takes into account all the possible frequencies such that the target signals will not be interfered with the undesired product terms.

SUMMARY OF THE INVENTION

In one aspect of the present invention, a concurrent digital multi-band linearizer compromises a baseband signal preprocessing block, the baseband signal processing block including a digital predistortion unit; a signal up-conversion block, an RF power amplification block, the RF power amplification block including the concurrent multi-band power amplifier, and an RF power combining network.

In the description of the invention, a concurrent dual-band amplifier will be used. It is noted that a concurrent dual-band power amplifier which includes one amplification unit for two frequency bands may be considered in one sense a simple and special case of multi-band power amplifiers.

In one aspect of the present invention, the feedback loop of the digital predistortion consists of multiple RF down-conversion units associated with each of the frequency band of operation.

In another aspect of the present invention, a single feedback loop based on subsampling receiver technique is used to down-convert and extract the RF signals form all the frequency band at the same time.

Further areas of applicability of the present invention will become apparent with reference to the following drawings, description and claims. It should be understood that the detailed description and specific examples, while indicating the preferred embodiment of the invention, are intended for purposes of illustration only and are not intended to limit the scope of the invention.

BRIEF DESCRIPTION OF THE DRAWINGS

The present invention will become more fully understood from the detailed description and the accompanying drawings, wherein:

FIG. **1** is a block diagram of the dual-band digital predistortion architecture according to an exemplary embodiment of the present invention.

FIG. **2** is an alternate embodiment illustrating a detailed block diagram of the architecture of FIG. **1**, using subsampling based feedback loop.

FIG. **3** is one embodiment illustrating a detailed block diagram of the subsampling receiver architecture of FIG. **2**.

FIG. **4**A is the fundamental signal representation at the input of the dual-band transmitter.

FIG. **4**B is the fundamental signal representation at the output of the dual-band transmitter and intermodulation terms at the output of the nonlinear transmitter.

FIG. **5** is dual-band RF signal and the frequency position of the subsampling harmonics.

FIG. **6** is a flowchart illustrating the steps of the execution of finding the possible subsampling frequencies.

FIG. **7**A is the power spectrum of the predistortion results for 880 MHz, using dual-band digital prediction technique with dual-branch feedback loop. Spectrums marked with circles are the output without linearization, those marked with diamonds are the output after linearization, and those marked with solid rectangles are the inputs signals.

FIG. **7**B is the power spectrum of the predistortion results for 1978 MHz, using dual-band digital prediction technique with dual-branch feedback loop, using the same codes as described for FIG. **7**A.

FIG. **8** is the Power spectrum of the output of the dual-band nonlinear transmitter including the two fundamental RF signals and their inter-modulation products and harmonics.

FIG. **9** is the Power spectrum of the captured signal using an ADC operating at 619.8 MHz sampling frequency.

FIG. **10**A is the power spectrum of the predistortion results for 880 MHz. using dual-band digital prediction technique with subsampling feedback loop.

FIG. **10**B is the power spectrum of the predistortion results for 1978 MHz, using dual-band digital prediction technique with subsampling feedback loop.

DETAILED DESCRIPTION OF THE PREFERRED EMBODIMENTS

The following description of the preferred embodiment(s) is merely exemplary in nature and is in no way intended to limit the invention, its application, or uses.

Broadly, an embodiment of the present invention provides multiple branch digital predistortion linearization architecture and digital signal processing algorithms for impairments-free operation and linearized multi-band transmitter.

Referring to FIG. **1**, the system block diagram of the dual-band linearization architecture **100** is displayed. The input signals, x**1** and x**2**, **105** are fed into two distinct predistorters blocks **110**. The predistorted signals **115** are converted from digital to analog **120** and up-converted **125** to RF frequencies. Then the two RF signals are combined **130** and amplified by the power amplifier **135**.

For digital predistortion linearization and identify the inverse model, the sample of the RF signal are captured using dual-band coupler **140**. Then the RF signals are bandpass filtered **145**, frequency down converted **150**, digitized using analog-to-digital converters **155**. The digital output samples **160**, the input signals **105** and predistorted signals **115** are used in the analyzing stage **165** for nonlinear model identification and reverse modeling.

The feedback path of the dual-band linearizer requires the use of two down-conversion stages **150**, as well as bandpass filters **145** to remove most of the imperfections caused by the power amplifier. The predistorted inputs, X_{pd1} and x x_{pd2}, **115** as well as the output of each band of the PA, y_1 and y_2, **160** are used to generate the predistorter signal processing model **110**. The processing model equations of the linearization processing algorithm **165** for prediction and compensation of the distortions and intermodulations is as follows:

$$x_{pd1}(n) = \sum_{m=0}^{M-1}\sum_{k=0}^{K-1}\sum_{j=0}^{k} c_{1,j,k,m}x_1(n-m)|x_1(n-m)|^{k-j}|x_2(n-m)|^{j} \tag{1}$$

$$x_{pd2}(n) = \sum_{m=0}^{M-1}\sum_{k=0}^{K-1}\sum_{j=0}^{k} c_{2,j,k,m}x_2(n-m)|x_2(n-m)|^{k-j}|x_1(n-m)|^{j}$$

Where $x_1(n)$ and $x_2(n)$ are the input signals $x_{pd1}(n)$ and $x_{pd2}(n)$ are the predistorted signals to the input of the dual-band transmitter, $c_{1,j,k,m}$ and $c_{2,j,k,m}$ are the identified model's coefficients, and finally M is the order of the memory effect and K is the order of nonlinearity.

Concurrent multi-band receiver architectures require a bandpass filter **145**, down-conversion stage **150**, and ADC **155** for the translation of each RF frequency bands to baseband. Using subsampling with a high speed ADC allows the elimination of all these components; however, the user needs to make sure that the signals don't overlap in the subsampled spectral domain.

Sampling multi-bands at the same time also eliminates the time delay taken between different band paths caused by the filters. FIG. **2** displays the dual-band predistortion architecture with a subsampling feedback loop **200**. At the feedback loop, it consists of optional bandpass filters **245**, a track and hold **250**, an analog-to-digital converter **255**, a digital conversion unit **260**, and analyzing stage **270**.

Sampling the band-limited RF signal at frequency rates much lower than the carrier frequency, but higher than signal bandwidth folds the RF signal to the lower frequencies, where these replicates of the RF signal at baseband or intermediate frequencies can be used to reconstruct the baseband signal. To make sure that there is no aliasing between the replicas, the subsampling rate should be chosen in the following range:

$$\frac{2f_U}{n} \le f_s \le \frac{2f_L}{n-1} \text{ where } 1 \le n \le \left\lfloor \frac{f_U}{B} \right\rfloor \tag{2}$$

$$f_s \ge 2 \times B \text{ Nyquist Rate}$$

where f_L and f_U are the lower and upper frequencies of the band-limited RF signal, $B=f_U-f_L$ is the signal bandwidth, and n is an integer value.

FIG. **3** shows a general block diagram of subsampling-based receiver **300**. It consists of RF bandpass filter **305**, low-noise amplifier (LNA) **310**, subsampling receiver **345** including the track and hold (T&H) **320**, and ADC **325** followed by baseband digital signal processing (DSP) unit **330**. The T&H **320** is required to expand the analog bandwidth of the receiver and defines the RF range of receiver operation. The sampling clock of the T&H **320** and ADC **325** are chosen from (2) to avoid any aliasing with the other RF signals.

In dual-band operation transmitter with nonlinearity, the first and second bands will produce intermodulation, cross modulation and harmonic products. FIG. **4** shows the power spectrum of the input signal, and the output signal when passed through a third order nonlinear system. The input signals as two-tone signal around carrier frequencies of ω_1 and ω_2 (FIG. **4**(*a*)) the output signals are around carrier

frequencies of ω_1 and ω_2 and the 3rd order intermodulation frequencies of $2\,\omega_1\omega_1$ and $2\,\omega_2\omega_1$ (FIG. **4**(*b*)). The unwanted intermodulation can be classified into three groups of cross-modulation, in-band intermodulation, and out-of-band intermodulation terms. This latter is usually filtered out before transmission using RF filter to avoid signal quality degradation and interference with the signals at the adjacent channels.

Now considering two RF signals at carrier frequencies of ω_2 and ω_2, with their respective bandwidths B**1** and B**2** as shown in FIG. **5**, the subsampling frequency, fs, must be chosen to ensure that the two signals do not overlap in the subsampled domain. Taking into account the subsampling theorem for sampling the multi-band signals and following the neighbor and boundary constraints, an iterative process is used to find all the valid subsampling frequencies for the two fundamental frequencies.

The, out-of-band intermodulation-modulation, and harmonics generated by the fundamental signals are not required for the predistortion application; therefore, an iterative subsampling algorithm has been developed to subsample the RF signals without any overlap with the other unwanted RF signals. FIG. **6** is the flowchart of the developed iterative subsampling algorithm to find the valid subsampling frequencies so that the replicas of the wanted RF signals have no overlap with the harmonics and intermodulation frequency terms.

Referring to FIG. **7**, there is shown the measured output spectrum of the dual-band transmitter **170** for three cases: 1) without using the dual-band digital pre-compensator **110**, 2) using the dual-band digital pre-compensator **110** 3) the input signal. The output spectrum of case-2 with digital pre-compensator shows that the digital pre-compensator **110** can compensate for the cross-modulation and in-band intermodulation terms introduced by the transmitter nonlinearity.

Referring to FIG. **8**, there is an example of the power spectrum at the output of the concurrent dual-band nonlinear transmitter which contains two fundamental RF frequencies and their corresponding harmonics and inter-modulation products.

As an example for the application of this invention, FIG. **9**, points up the power spectrum after the subsampling feedback loop which shows the two fundamental RF signals at 260.2 MHz and 118.6 MHz when the subsampling frequency of 619.8 is used following is determination by the developed iterative subsampling algorithm illustrated in FIG. **6**. The spectrum in FIG. **9** shows that the harmonics and inter-modulation terms have no interference with the two desired fundamental signals.

Referring to FIG. **10**, there is shown the measured output spectrum of the dual-band transmitter **280** for three cases: 1) without using the dual-band digital pre-compensator **210**, 2) using the dual-band digital pre-compensator **210**, 3) the input signal. The output spectrum of case-2 with digital pre-compensator shows that the digital pre-compensator **210** can compensate for the cross-modulation and in-band intermodulation terms introduced by the transmitter dynamic nonlinearity with memory effects.

What is claimed is:

1. A transmitter comprising:

a power amplifier configured to amplify modulated concurrent multi-band signals to provide amplified concurrent multi-band signals;

a concurrent digital multi-band predistortion block configured to effect predistortion of the modulated concurrent multi-band signals to compensate for a non-linearity of the power amplifier; and

a signal observation feedback loop configured to effect concurrent sampling of the amplified concurrent multi-band signals at a subsampling frequency lower than twice a highest signal frequency in the amplified concurrent multi-band signals.

2. The transmitter of claim **1**, wherein said concurrent digital multi-band predistortion block further comprises:

a plurality of digital baseband signal predistorter blocks, each baseband signal predistorter block having a plurality of first inputs and a single output, the plurality of first inputs corresponding in number to the multiple bands of the multi-band transmitter and each first input corresponding to a single frequency channel.

3. The transmitter of claim **2**, wherein said concurrent digital multi-band predistortion block further comprises:

a plurality of digital baseband signal predistorter blocks, each baseband signal predistorter block having a plurality of first inputs and a single output, the plurality of first inputs corresponding in number to the multiple bands of the multi-band transmitter and each first input corresponding to a single frequency channel and wherein the signal observation feedback loop includes an analyzing and modeling stage directly connected to each of the plurality of outputs of said digital multi-band predistortion block for receiving the respective predistorted signals and for using said received predistored signals in controlling said digital multi-band predistortion block.

4. The transmitter of claim **3**, wherein said analyzing and modeling stage further comprises:

a plurality of outputs connected to and for updating the parameters of said digital baseband signal predistorter block;

a plurality of inputs connected to said outputs of said signal observation feedback loop.

5. The transmitter of claim **3**, wherein said analyzing and modeling stage is further configured to:

perform time alignment of complex baseband signals from sampling said outputs of said power amplifier; and

perform the reconstruction of the complex baseband signals from sampling said outputs of said power amplifier.

6. The transmitter of claim **2**, wherein said signal observation feedback loop further is further configured to:

down-convert samples of the RF signals at said output of the power amplifier; and

extract from said down-converted samples a baseband equivalent for all frequency channels.

7. The transmitter of claim **2**, wherein said signal observation feedback loop further comprises for each channel an RF filter;

a signal down conversion block; and

an analog-to-digital converter (ADC).

8. The transmitter of claim **2**, wherein said signal observation feedback loop further comprises:

a single subsampling-based receiver to down-convert samples output from a concurrent multi-band transmitter.

9. The transmitter of claim **8**, wherein said single subsampling-based receiver further comprises:

an RF filter; a track and hold (T&H) block; and an analog-to-digital converter (ADC).

10. The transmitter of claim **1**, wherein the subsampling frequency is greater than two times a signal bandwidth of the modulated concurrent multi-band signals.

11. The transmitter of clam **1**, wherein the subsampling frequency f_s is in a range $2fu/n \leq f_{s \leq} 2h/(n-1)$where $1 \leq n \leq |fu/B|$, and where B is a bandwidth of the amplified concurrent multi-band signals, and f_L f_u, are respective lower and upper frequencies of the bandwidth, and n is an integer.

12. A method at transmitter comprising:

amplifying a modulated concurrent multi-hand signal to provide an amplified concurrent multi-band sinal;

predistorting the modulated concurrent multi-hand signal to compensate for a non-linearity of the power amplifier:

subsampling of the amplified concurrent multi-band signals at a subsampling frequency lower than twice a highest signal frequency in the amplified multi-band signal: and

controlling the predistorting by the subsampled concurrent multi-band signal.

13. The method of claim **12**, wherein the subsampling frequency is greater than two times a signal bandwidth of the modulated concurrent multi-band signal.

14. The method of claim **12**, wherein the subsampling frequency is chosen to avoiding aliasing between replicas.

15. The method of claim **14**, wherein the chosen subsampling frequency fs for a given signal bandwidth and carrier frequency fc is in the range $2fu/n \leq f_{s \leq} 2h/(n-1)$where $1 \leq n \leq |fu/B|$and where B is a bandwidth of the amplified concurrent multi band signal, and f_L,f_u are respective lower and upper frequencies of the bandwidth, and n is an integer.

* * * * *