US005826015A

United States Patent [19]

Schmidt

[11] **Patent Number: 5,826,015**

[45] **Date of Patent: Oct. 20, 1998**

[54] **METHOD AND APPARATUS FOR SECURE REMOTE PROGRAMMING OF FIRMWARE AND CONFIGURATIONS OF A COMPUTER OVER A NETWORK**

[75] Inventor: **Thomas J. Schmidt**, Milford, N.H.

[73] Assignee: **Digital Equipment Corporation**, Maynard, Mass.

[21] Appl. No.: **804,096**

[22] Filed: **Feb. 20, 1997**

[51] **Int. Cl.**[6] **G06F 11/00**

[52] **U.S. Cl.** **395/187.01**; 395/186; 395/188.01; 395/200.59; 395/218

[58] **Field of Search** 395/186, 187.01, 395/188.01, 218, 200.59; 380/4, 49

[56] **References Cited**

U.S. PATENT DOCUMENTS

4,051,326	9/1977	Badagnani et al.	179/2 A
5,146,561	9/1992	Carey et al.	395/200.3
5,305,321	4/1994	Crayford	370/94.1
5,404,544	4/1995	Crayford	395/750
5,428,745	6/1995	De Bruijn et al.	395/200
5,485,622	1/1996	Yamaki	395/186
5,606,668	2/1997	Shwed	395/200.11

OTHER PUBLICATIONS

Implementation of Magic Packet™–Ready Motherboard, AMD, Jan. 1997, p. 1.

Magic Packet™ Technology, AMD, Aug. 1996. pp. 1–2.

Magic Packet™ Technology, AMD, Glen Gibson, Nov. 1995, pp. 1–5.

AMD and HP Team to deliver "Magic Packet™" for Remote Wake up of Networked Green PCs, AMD, Mar. 1995.

AMD First with Magic Packet™ Technology on FAST Ethernet Chip, AMD, Jun., 1996.

PCnet™—FAST, AMD, Jul. 1996.

IBM Ethernet Adapters Fact Sheet, IBM, Feb. 1996.

Flash Memory Write Protection Techniques, Intel, Sept. 1993, pp. 2–42 to 2–48, Application Note in Flash Memory: vol. I 1994, Intel Databook.

Primary Examiner—Robert W. Beausoliel, Jr.
Assistant Examiner—Pierre Eddy Elisca
Attorney, Agent, or Firm—Michael A. Rodriguez

[57] **ABSTRACT**

A method and related apparatus enables one station on a local area network (LAN) **24** to remotely and securely modify sensitive information of another station on the LAN **24**. A workstation **12**, acting as a remote management console, generates a wake-up packet **32** or **42** intended for a desktop computer **14** on the LAN **24**. A network interface **64** receives and processes the wake-up packet, and issues a signal to wake up the desktop computer. In response to the signal, the desktop computer **14** bootstraps. Data indicating that the network interface **64** has issued the signal is stored in register **104**. In the course of bootstrapping, the processor **78** examines the register **104** to determine that the network interface **64** has initiated the wake-up of the desktop computer **14**. Once this determination is made, the write protection circuitry **76** places the BIOS ROM **74** in an unprotected state wherein the contents BIOS ROM **74** can be modified by the workstation **12**.

12 Claims, 11 Drawing Sheets

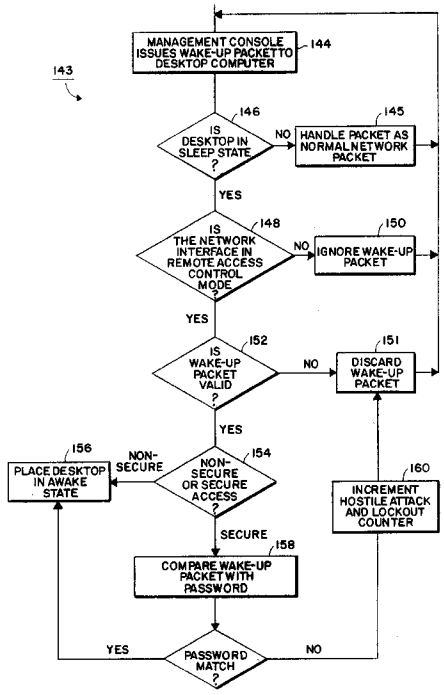

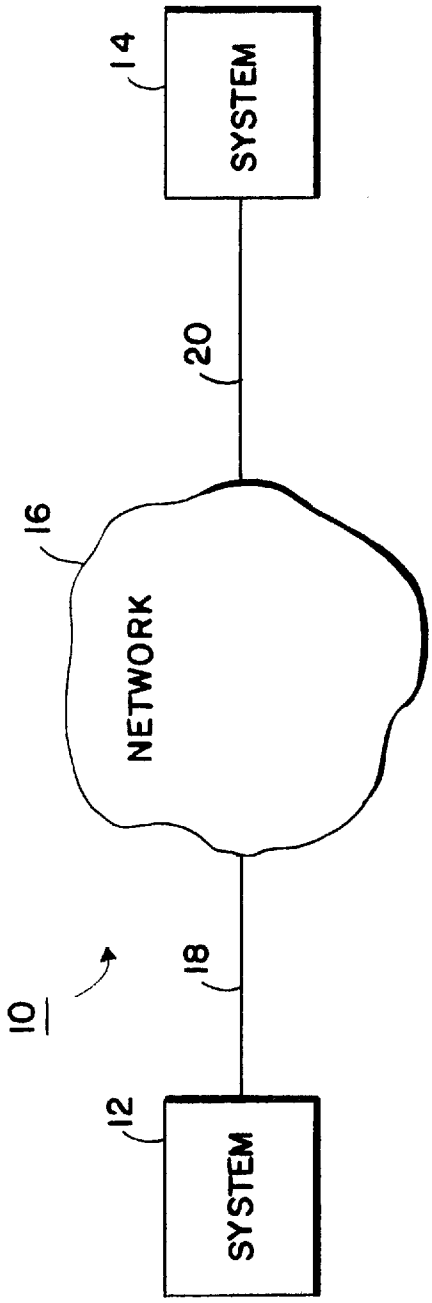

FIG. 1

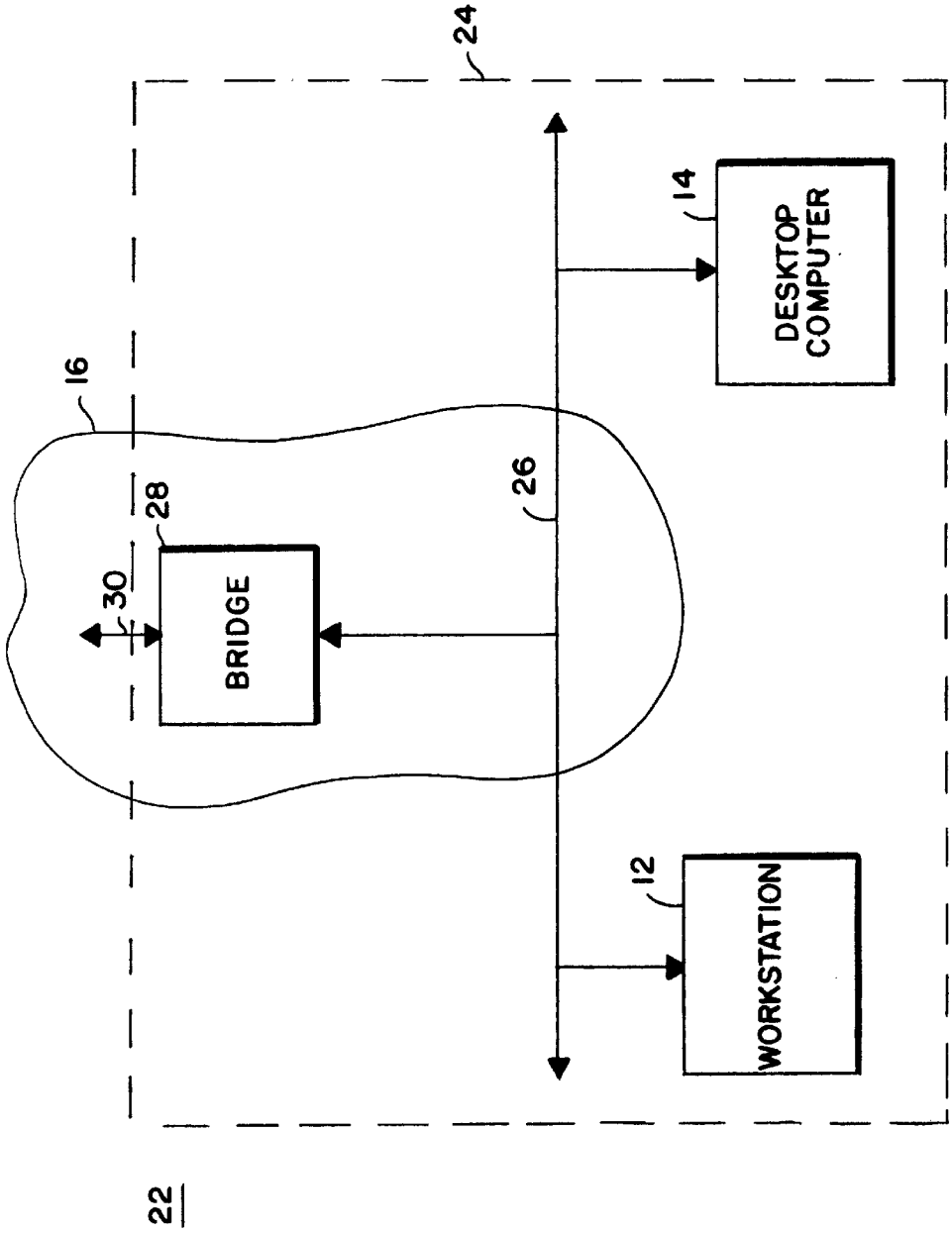

FIG. 2

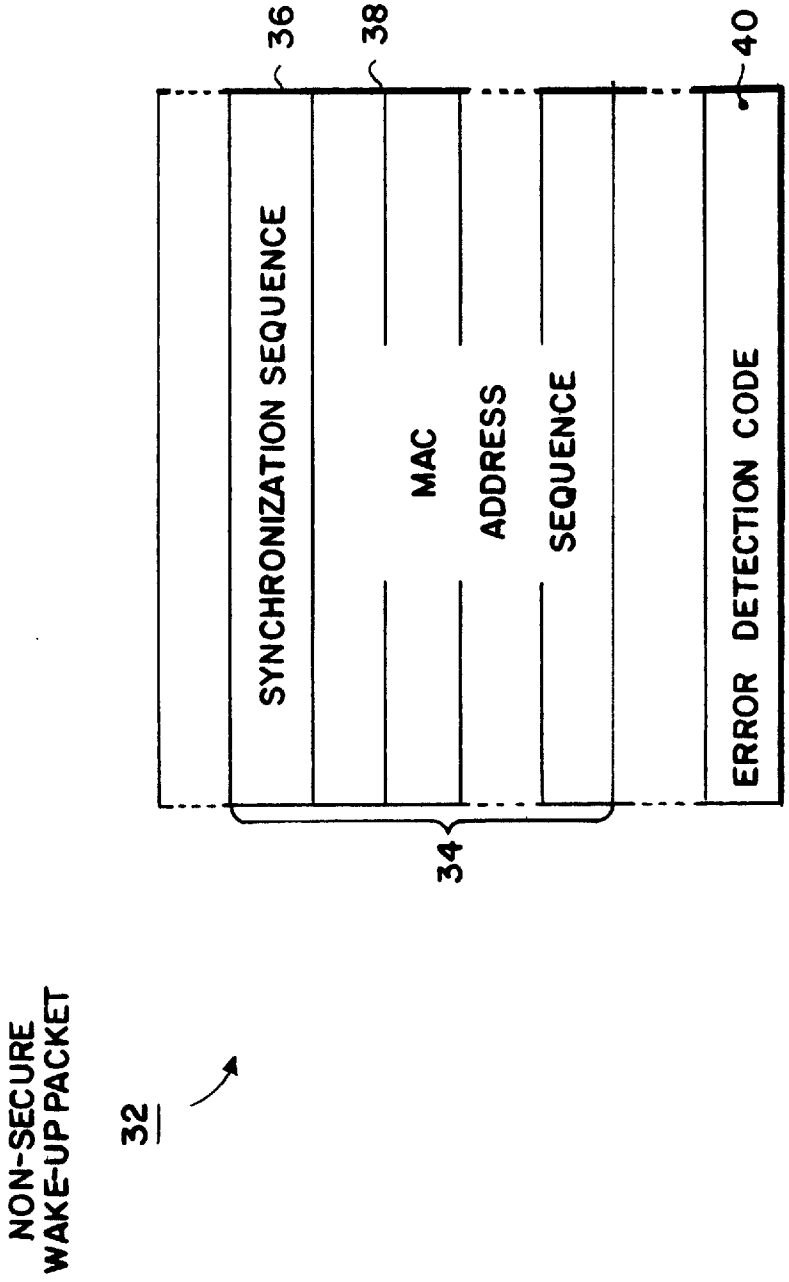
NON-SECURE
WAKE-UP PACKET
32
34
36
38
40
SYNCHRONIZATION SEQUENCE
MAC
ADDRESS
SEQUENCE
ERROR DETECTION CODE

FIG. 3

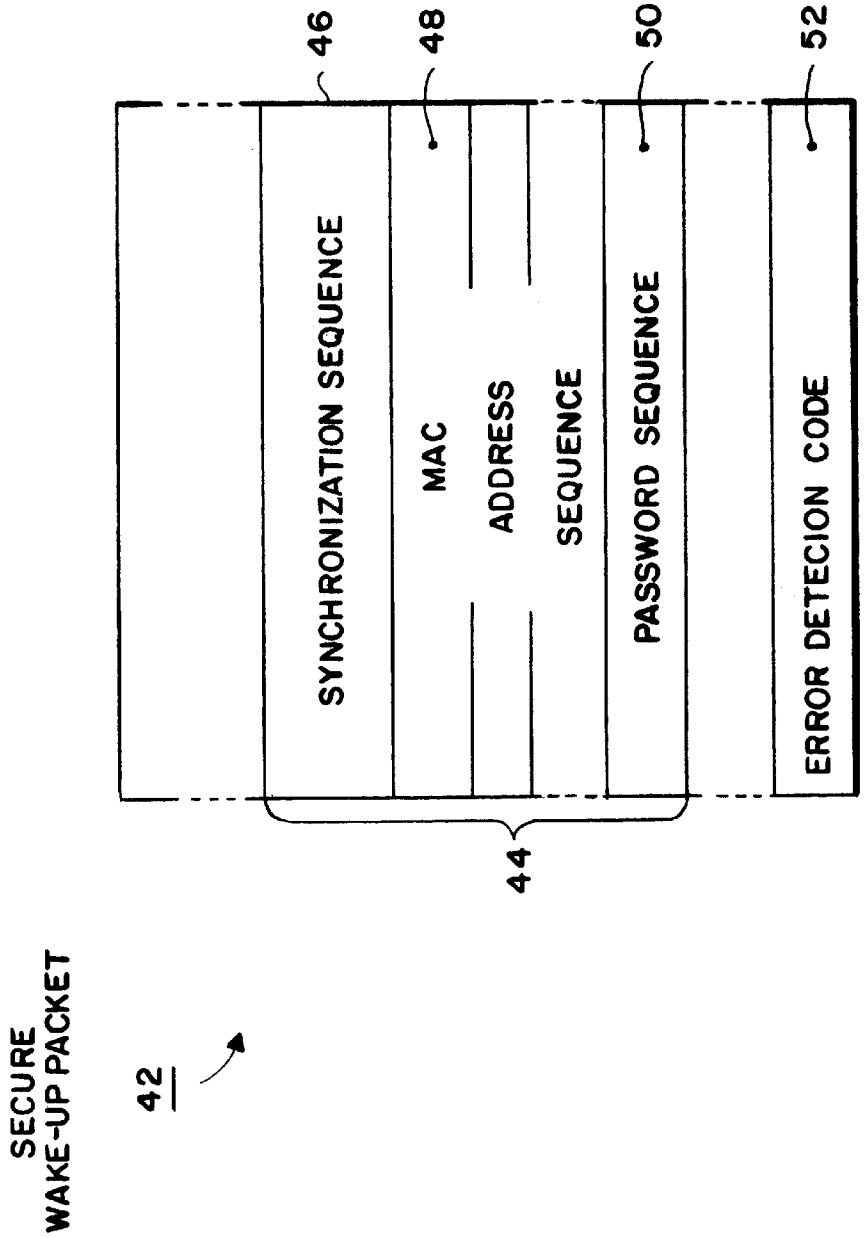
SECURE
WAKE-UP PACKET
42
44
46
SYNCHRONIZATION SEQUENCE
48
MAC
ADDRESS
SEQUENCE
50
PASSWORD SEQUENCE
52
ERROR DETECION CODE

FIG. 4

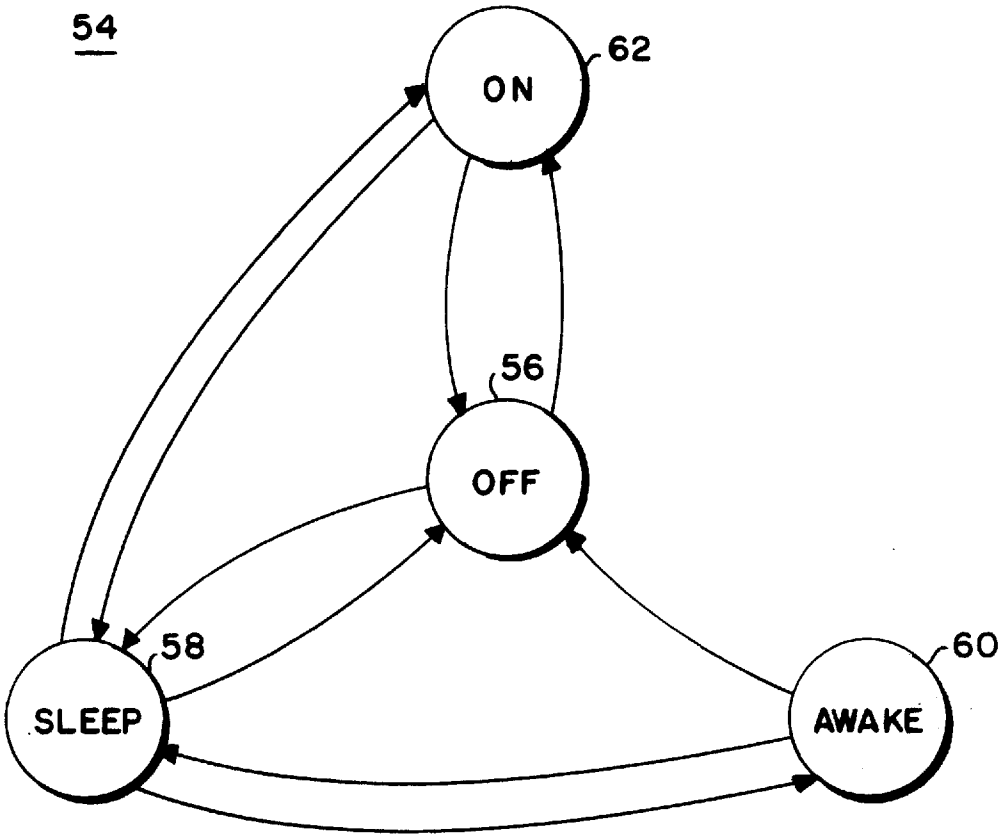

FIG. 5

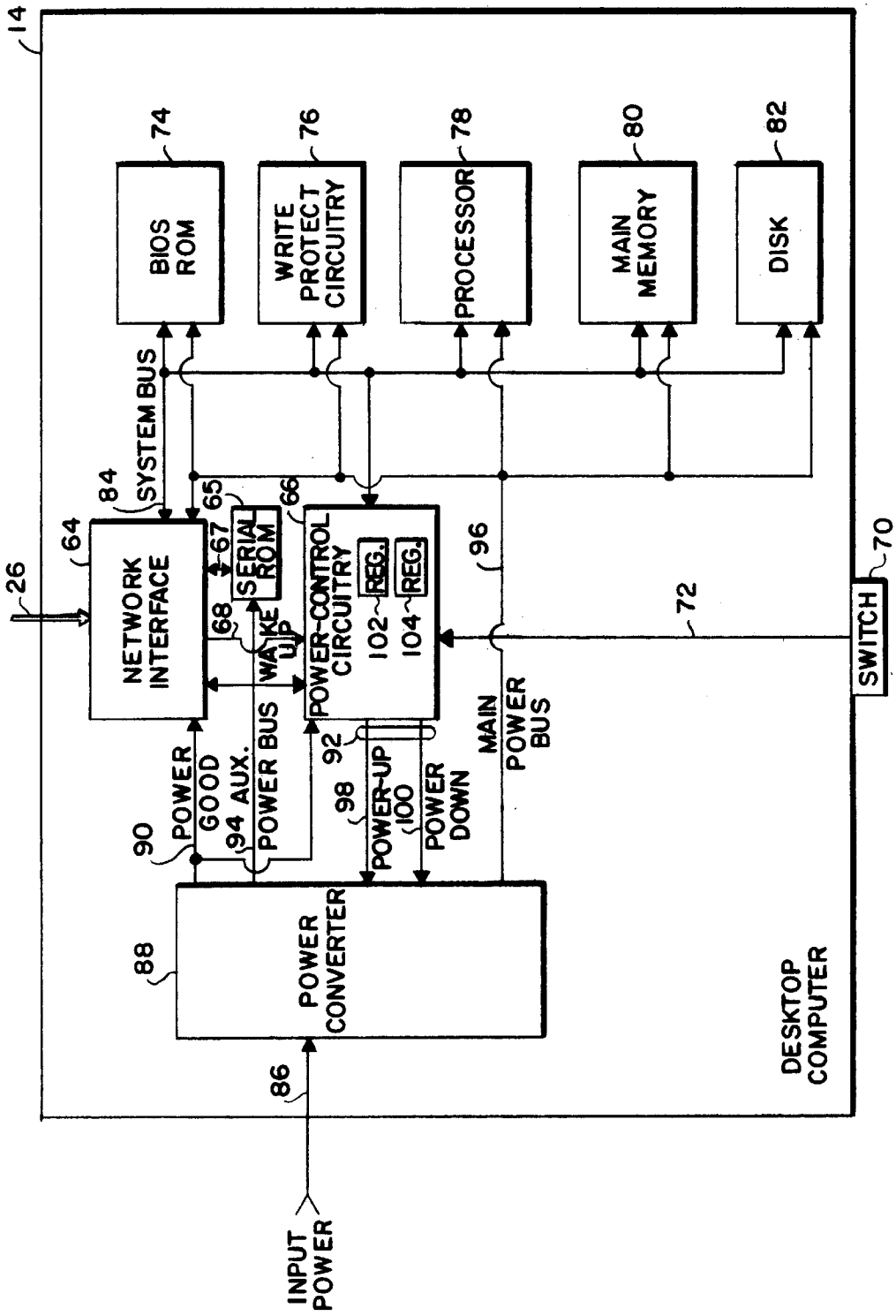
14
BIOS ROM
74
WRITE PROTECT CIRCUITRY
76
PROCESSOR
78
MAIN MEMORY
80
DISK
82
SYSTEM BUS
84
26
NETWORK INTERFACE
64
65
67
SERIAL ROM
66
68
WAKE UP
POWER-CONTROL CIRCUITRY
REG.
REG.
102
104
96
72
SWITCH
70
POWER GOOD
90
94 AUX. POWER BUS
92
98
POWER-UP
100
POWER DOWN
MAIN POWER BUS
POWER CONVERTER
88
86
INPUT POWER
DESKTOP COMPUTER

FIG. 6

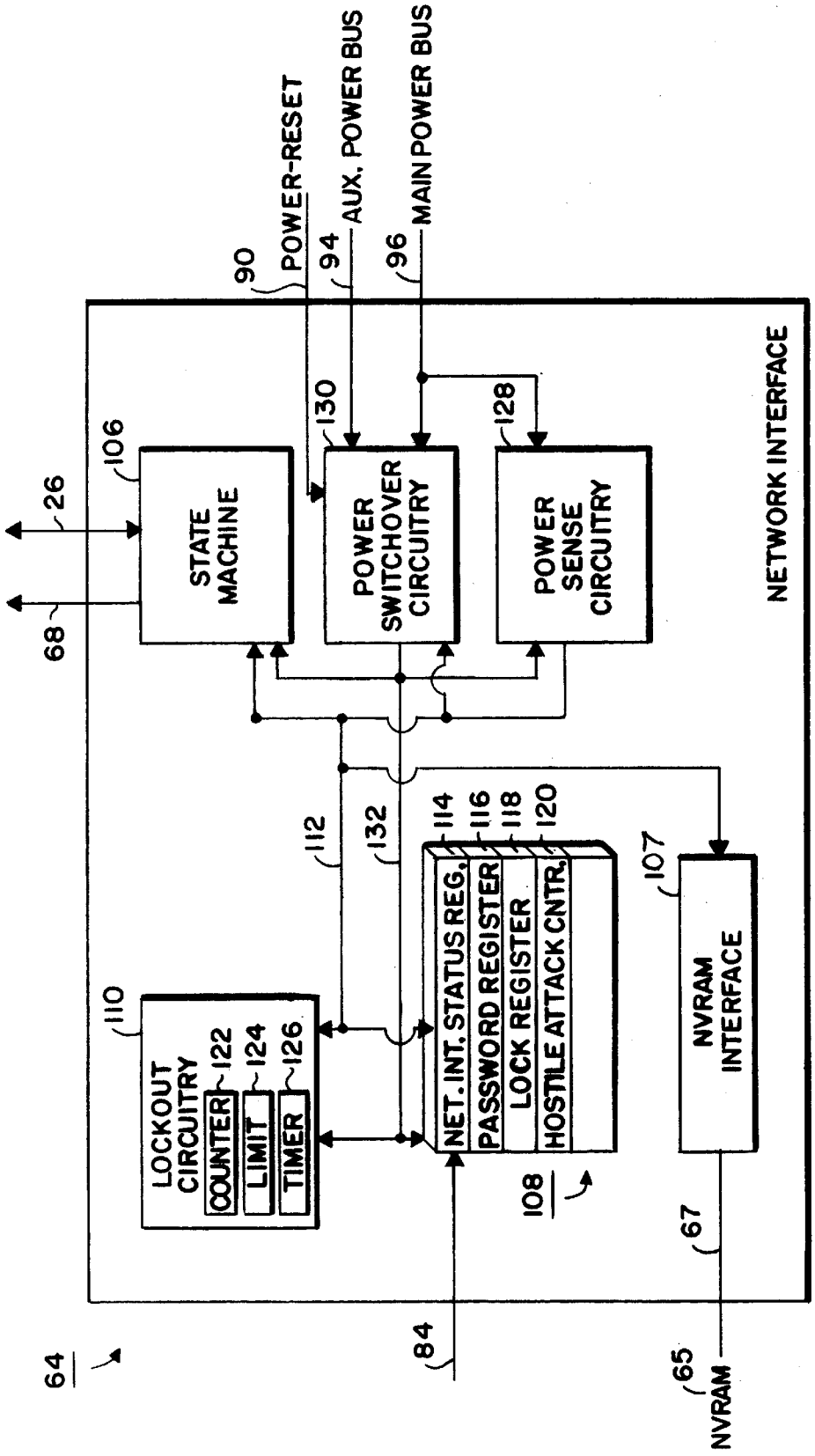
POWER-RESET
AUX. POWER BUS
MAIN POWER BUS
90
94
96
26
68
106
STATE MACHINE
130
POWER SWITCHOVER CIRCUITRY
128
POWER SENSE CIRCUITRY
NETWORK INTERFACE
112
132
114
116
118
120
NET. INT. STATUS REG.
PASSWORD REGISTER
LOCK REGISTER
HOSTILE ATTACK CNTR.
107
NVRAM INTERFACE
110
LOCKOUT CIRCUITRY
COUNTER
122
LIMIT
124
TIMER
126
108
67
64
84
65
NVRAM

FIG. 7

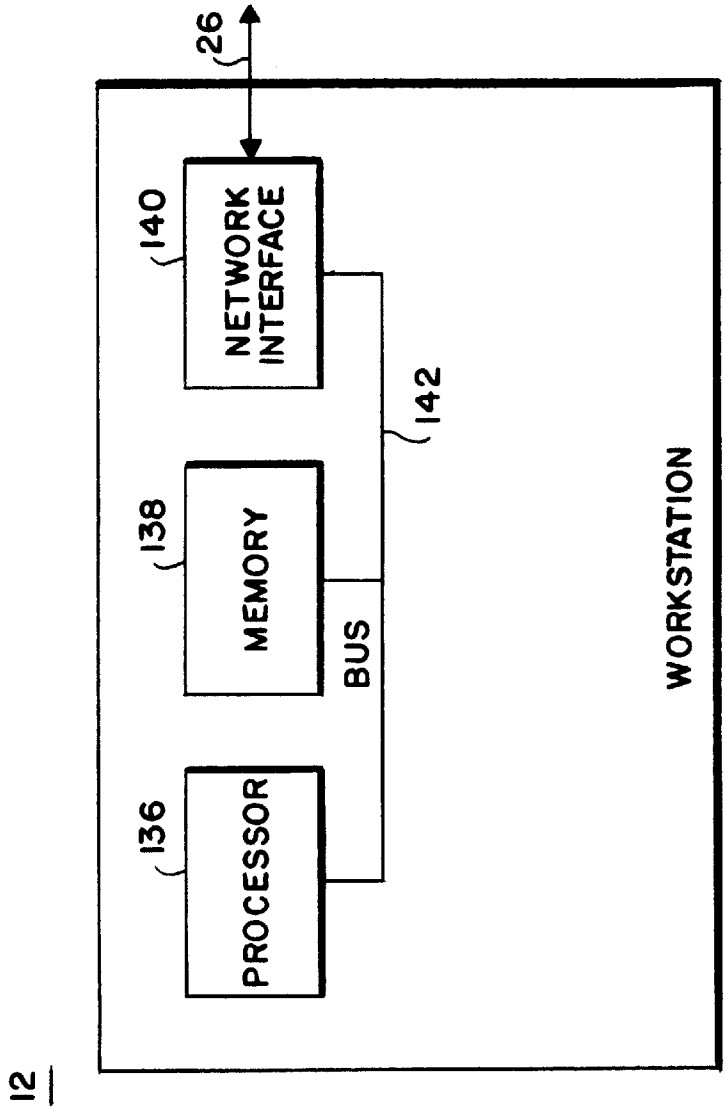
12
136
PROCESSOR
138
MEMORY
140
NETWORK INTERFACE
BUS
142
26
WORKSTATION

FIG. 8

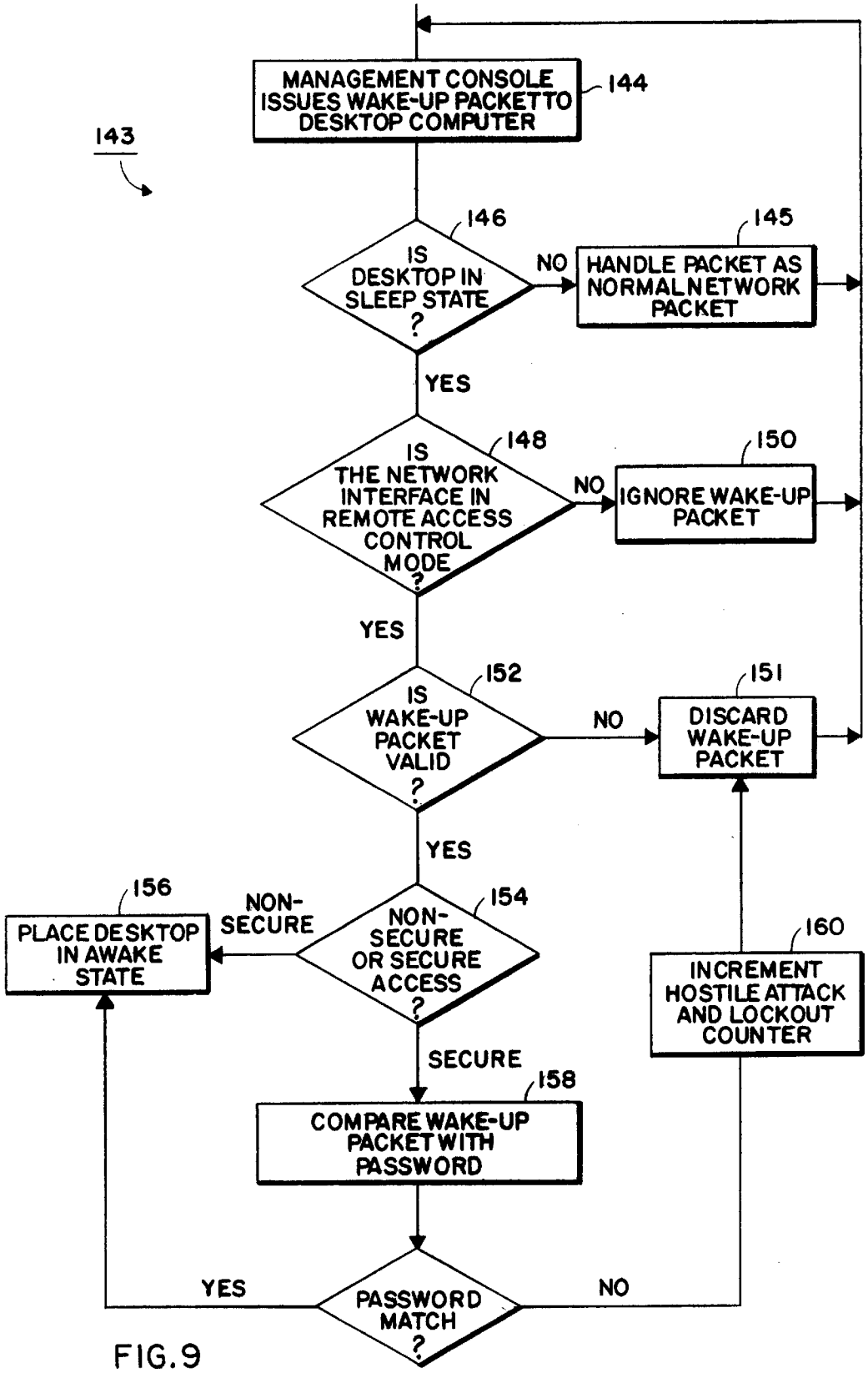
143
MANAGEMENT CONSOLE ISSUES WAKE-UP PACKET TO DESKTOP COMPUTER
144
IS DESKTOP IN SLEEP STATE ?
146
NO
HANDLE PACKET AS NORMAL NETWORK PACKET
145
YES
IS THE NETWORK INTERFACE IN REMOTE ACCESS CONTROL MODE ?
148
NO
IGNORE WAKE-UP PACKET
150
YES
IS WAKE-UP PACKET VALID ?
152
NO
DISCARD WAKE-UP PACKET
151
YES
NON-SECURE OR SECURE ACCESS ?
154
NON-SECURE
PLACE DESKTOP IN AWAKE STATE
156
INCREMENT HOSTILE ATTACK AND LOCKOUT COUNTER
160
SECURE
COMPARE WAKE-UP PACKET WITH PASSWORD
158
PASSWORD MATCH ?
YES
NO

FIG. 9

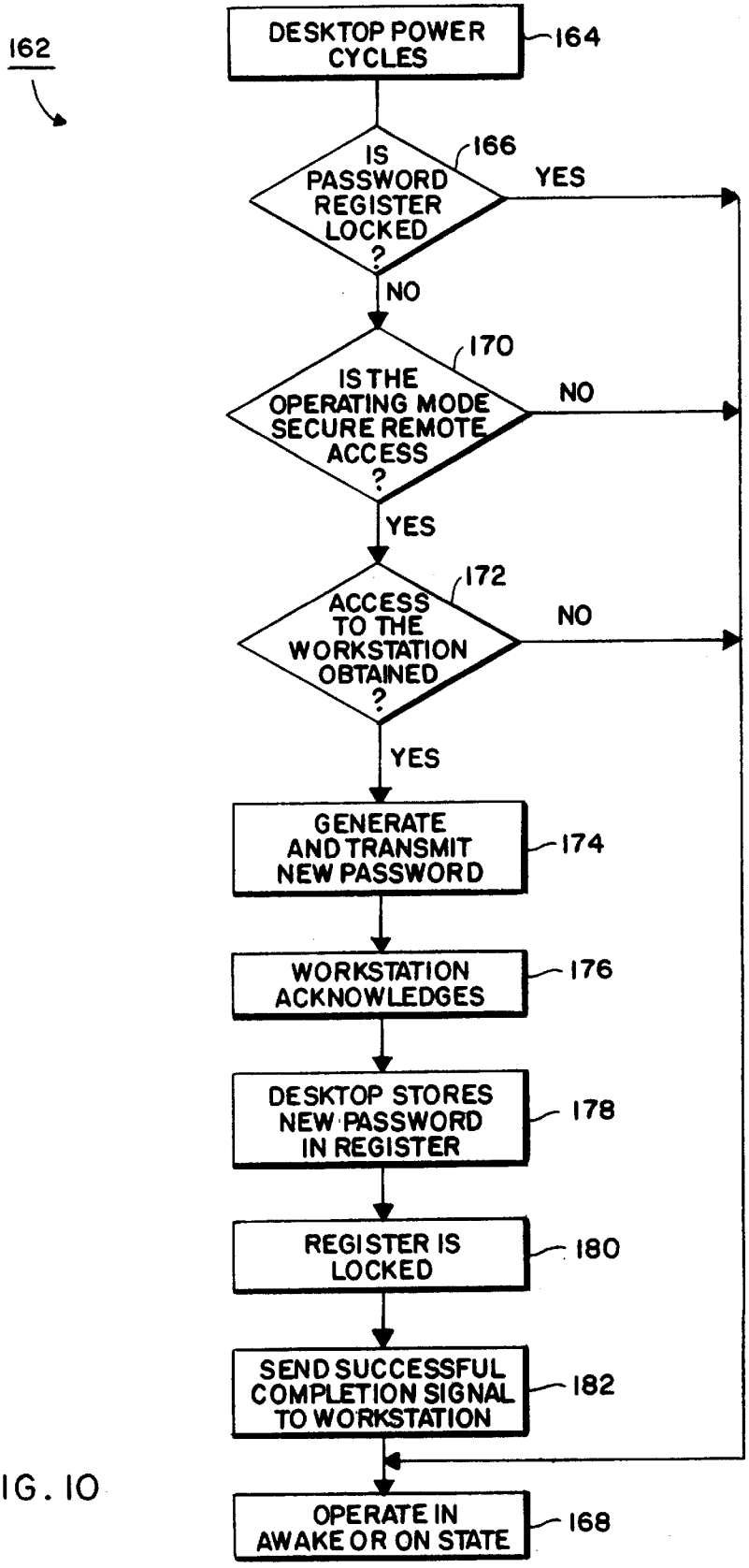
162
DESKTOP POWER CYCLES
164
IS PASSWORD REGISTER LOCKED ?
166
YES
NO
IS THE OPERATING MODE SECURE REMOTE ACCESS ?
170
NO
YES
ACCESS TO THE WORKSTATION OBTAINED ?
172
NO
YES
GENERATE AND TRANSMIT NEW PASSWORD
174
WORKSTATION ACKNOWLEDGES
176
DESKTOP STORES NEW PASSWORD IN REGISTER
178
REGISTER IS LOCKED
180
SEND SUCCESSFUL COMPLETION SIGNAL TO WORKSTATION
182
OPERATE IN AWAKE OR ON STATE
168

FIG. 10

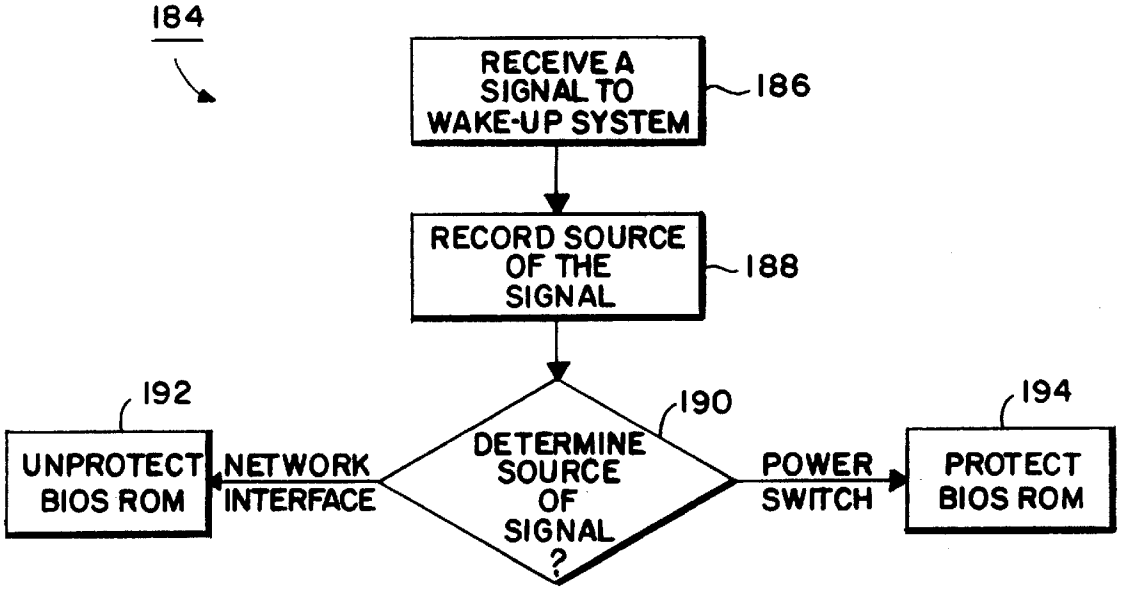
184
RECEIVE A SIGNAL TO WAKE-UP SYSTEM
186
RECORD SOURCE OF THE SIGNAL
188
192
190
194
UNPROTECT BIOS ROM
NETWORK INTERFACE
DETERMINE SOURCE OF SIGNAL ?
POWER SWITCH
PROTECT BIOS ROM

FIG. 11

METHOD AND APPARATUS FOR SECURE REMOTE PROGRAMMING OF FIRMWARE AND CONFIGURATIONS OF A COMPUTER OVER A NETWORK

FIELD OF THE INVENTION

This invention relates generally to accessing a system over a network, and more particularly to accessing the system to modify sensitive information on the system.

BACKGROUND

A computer network is a collection of various devices connected together to share computer resources and communicate with each other. These devices, which can include end nodes (e.g., computer systems, printers, etc.) and network connection elements (e.g., hubs, switches, bridges, routers and gateways), interface the network through communication links. The gateways, routers, and switching hubs route data on the communication links to the other devices in the network. Industry has arranged such devices to produce numerous and diverse types of networks including wide area networks (WANs), metropolitan area networks (MANs), and local area networks (LANs). The devices on the networks communicate by transferring data in discrete quantities called packets. A packet can range from a few bits in length to several thousand, as determined by the type of network.

Managing the operation of a network involves performing various administrative and maintenance tasks, such as updating software and tracking network resources. These tasks often require communicating directly with many of the devices on the network. Ideally, such administrative access to the devices would occur during off-business hours, such as evenings and weekends, so as to minimize disruption of day-time business operations. Further, it would be advantageous if a network administrator could communicate with each device from a remote computer site. However, there is tension between this administrative convenience and the important interest of conserving electrical power. It is during these very off-business hours when some computer users might turn off the computer devices to conserve power, thereby frustrating the administrative process.

A significant problem posed by these turned off computer devices is how to gain access in order to perform the administrative duties. Time and resources must be spent finding and reaching the physical location of each device on the network in order to locally turn on those devices. Yet even after locating the device, other complications could still conceivably prevent the administrator from accessing the device, such as finding the turned off device behind locked office doors.

One particular approach to solving this problem is a mechanism for awakening a turned off device from a remote computer. The remote computer sends a special packet of data, called a wake-up packet, to the turned off device. An example of such a wake-up packet is Magic Packet™, developed by AMD®. The device is not entirely turned off, otherwise the device would be unable to detect the wake-up packet. Therefore, when the device is locally turned off by a user, the device actually continues operating, but in a sleep state. In the sleep state, a portion of the device still receives electrical power. The portion receiving the electrical power is capable of monitoring packet traffic on the network. Consequently, this portion wakes up the device upon detecting a wake-up packet appropriately addressed to the device.

As a result, the network administrator who sent the wake-up packet to the device from a remote computer is able to remotely perform administrative and management activities on that device.

However, such a wake-up mechanism produces a new avenue by which unauthorized users can try to breach the security of the device. Before the development of wake-up packets, a device was deemed most secure when turned off. The act of turning off the device effectively disconnected the device from other devices on the network. No remote computer could use the network to communicate with that device. But now, in order to be able to detect wake-up packets, a device remains connected to the network even though the device has been locally turned off. By knowing the network address of this device and understanding the mechanics of wake-up packets, an unauthorized user could gain unchallenged access to the device. Once inside the device, the unauthorized user could then readily write and read any of the device's unprotected resources and could even attempt to break into those areas where sensitive information is stored. Thus, the mechanism exposes these devices to a new class and greater number of potential unauthorized users, i.e., the remote attacker.

Concern with remote attackers restrains taking full advantage of the wake-up mechanism. Certain information is too critical to the secure and proper operation of the device to indulge exposure to changes by a remote attacker. Examples of such critical data are firmware, system configurations, administration passwords and basic input/output system (BIOS) software. To give network administrators the ability to remotely upgrade the BIOS, for example, the BIOS needs to be in an unprotected (i.e., writeable) state after the device has been remotely awakened—but this also leaves the BIOS open to the remote attacker. Consequently, devices have hardware to protect such sensitive data from accidental or intentional changes. Unfortunately, the hardware does not discriminate between authorized and unauthorized users. Thus, this same protection that keeps out remote attackers also deprives network administrators of highly desirable and useful operations such as the remote updating of administration passwords and upgrading of the BIOS.

Moreover, such remote operations are likely to remain out of the grasp of network administrators unless there can be an assurance that only authorized users are able to remotely wake up a device. Yet even with such assurance, the device still cannot distinguish between a remote authorized user and a local unauthorized user. Thus, indiscriminately unprotecting the BIOS whenever the device wakes up helps the remote user, but also creates a new danger of unauthorized modifications—by the local user. Such indiscriminate action would give the local user, who wakes up the device by locally turning on the power, the ability to intentionally or unintentionally modify the unprotected BIOS.

For the foregoing reasons, there is a need for a method and apparatus that can securely provide remote programming of sensitive data on devices over a network, yet avoid the aforementioned problems.

SUMMARY OF THE INVENTION

The present invention resides in a method and related apparatus for securely writing data over a network to a device in a system. The ability to wake-up a system over a network from a remote site relieves network administrators from having to perform their administrative functions at the physical location of each device in the network. It also gives users the ability to remotely wake up and use their systems

as if they were actually at their systems. But at the same time, the ability to remotely wake up a system, by itself, can make the system vulnerable to unauthorized users. Further, to permit a remote user to reprogram certain information upon remote wake-up, that information needs to be unprotected after the system wakes up. But unless the system has a way of distinguishing remote wake-ups from local wake-ups, this information is unprotected to both remote and local users alike.

Until the present invention, there has not been a way to determine whether the device has been awakened locally or remotely. So despite having remote wake-up capability, administrators may still need to update sensitive information, like the BIOS, at the physical location of the system. Thus, an objective of the present invention is to protect sensitive system resources, such as the BIOS, when the system is awakened locally, and to unprotect those resources when the system is awakened remotely.

In terms of the novel method, the invention securely writes data to a device in a system over a network. The invention stores data representing a particular component issuing a signal to wake up the system, determines from the stored data whether the particular component issued the signal in response to receiving a wake-up packet, and allows data to be written to the device if the particular component issued the signal in response to the wake-up packet. Otherwise the invention prohibits data from being written to the device. Thus, the present invention enables remote programming of sensitive system resources, like a BIOS, without exposing the resource to other security risks.

In terms of the novel apparatus, the invention comprises a network interface for issuing a signal to wake up a system in response to receiving a wake-up packet. Data storage coupled to the network interface stores data indicating whether the network interface has issued the signal. The invention also includes a processor that determines from the stored data whether the network interface issued the signal, and circuitry that allows data to be written to the device if the processor determines from the stored data that the network interface issued the signal.

Other aspects and advantages of the invention will become apparent from the following more detailed description, taken in conjunction with the accompanying drawings.

BRIEF DESCRIPTION OF THE DRAWINGS

FIG. **1** is a block diagram of a network including systems connected to the network;

FIG. **2** is a block diagram of a specific embodiment of the network in FIG. **1**, the specific embodiment including a local area network (LAN) configured as a bus and having a desktop computer and a workstation;

FIG. **3** is an illustration of a non-secure wake-up packet including a synchronization data sequence and a MAC address data sequence;

FIG. **4** is an illustration of a secure wake-up packet including a synchronization data sequence, a MAC address data sequence and a password data sequence;

FIG. **5** is a state diagram showing the electrical power states of the desktop computer of FIG. **2**;

FIG. **6** is a functional diagram of the desktop computer shown in FIG. **2**, including a network interface;

FIG. **7** is a functional diagram of the network interface of FIG. **6**;

FIG. **8** is block diagram of the workstation in FIG. **2**;

FIG. **9** is a flow chart depicting the operation of the desktop computer of FIG. **4** and the workstation of FIG. **8** during a remote wake-up operation;

FIG. **10** is. a flow chart depicting the operations between desktop computer of FIG. **4** and the workstation of FIG. **8** during the generation of a new password for secure remote wake-up; and

FIG. **11** is a flow chart illustrating an exemplary method for securely writing data to the BIOS ROM of FIG. **6**.

DETAILED DESCRIPTION OF THE PREFERRED EMBODIMENT

FIG. **1** shows an arrangement **10** embodying the principles of the invention. The arrangement **10** includes systems **12** and **14** connected to a network **16** by communication links **18** and **20**. Systems **12** and **14** can be any of a variety of processor-controlled systems including computer systems (e.g., desktop computers, workstations, high-end multiprocessor computers), satellite systems, automotive systems, or consumer electronic devices like television sets and video cassette recorders. The network **16** can be any one or combination of a variety network types including LANS, MANs, or WANs. The communication links **18**, **20** can be wired or wireless links to provide electrical, acoustical, or optical communication between the systems **12** and **14**.

FIG. **2** shows a specific exemplary embodiment **22** of the arrangement **10**. The specific embodiment **22** includes a local area network (LAN) **24**. LANs can be configured using a number of topologies, such as stars, rings, token rings, buses or hierarchies. For the purpose of illustrating the principles of the invention, the LAN **24** is configured as a bus such as Ethernet™. Any other LAN topology or network type (e.g., WANs, MANs) can similarly illustrate the principles of the invention.

The LAN **24** includes stations **12**, **14**, and **28** connected to each other by a communication link **26**. Stations **12** and **14** correspond to the systems **12** and **14** of FIG. **1** and may be any one of various types of computer devices such as desktop computers, workstations, terminals and printers. For exemplary purposes throughout the detailed description, the station **12** is described as a workstation and station **14** as a desktop computer. The station **28** is described as a bridge, but any network device capable of providing an interface to the network **16** through the external communication link **30** could have served this description. Examples of such network devices include gateways, routers, hubs, and repeaters.

Every station **12**, **14**, **28** on the LAN **24** is identified by an unique address. With regard to the Ethernet™ topology, these unique addresses are called medium access control (MAC) addresses. A MAC address has a six octet format (an octet is 8 bits of data). Each station **12**, **14**, **28** maintains a list of its own MAC address and the MAC addresses of those stations that receive and transmit information through that station. For example, the bridge **28** keeps its own MAC address and the MAC addresses of the other stations **12**–**14**. Hence, the bridge **28** recognizes messages on the external communication link **30** directed to the workstation **12**, the desktop computer **14** or itself and forwards such messages accordingly.

The stations **12**, **14**, **28** transmit and receive information over the communication links **26**, **30** in the form of packets. The format of the packets depends upon the communication protocols employed on the LAN **24**. In the present illustration, the packets include a header section and a data section. The header section includes a source field and a destination field. The information transmitted in the source

and destination fields are the MAC addresses of the transmitting and receiving stations, respectively.

Packets of data may be directed to any one or all of the stations **12**, **14**, **28** on the LAN **24**. The header of a packet directed to one station specifies the particular MAC address of that station in the destination field. A packet directed to all devices on the LAN **24** is called a broadcast packet. A broadcast packet can be identified by a particular address in the destination field. In LAN **24**, the particular destination address that identifies the packet as a broadcast packet has six octets of FF. (where h means hexadecimal). Each station **12**, **14**, **28** in the LAN **24** accepts a broadcast packet as though the packet had been specifically addressed to that station.

According to the principles of the invention, certain types of packets are capable of waking up those stations to which the packets are addressed. Thus, a transmitting station is able to remotely wake up a receiving station by sending this type of packet to the receiving station. Such packets are hereafter called wake-up packets. For example, the workstation **12** as a transmitting station can remotely wake up the desktop computer **14** as a receiving station by sending a wake-up packet to the desktop computer **14**. This process of waking up the desktop computer **14** is hereafter called a remote wake-up operation. The ability of wake-up packets to wake up the desktop computer **14** is unaffected by having to pass through bridges and routers across the network **16**. More detail regarding the meaning of waking up a station is provided in connection with FIG. **5**.

There are at least two types of wake-up packets that can be used to perform a remote wake-up operation: non-secure wake-up packets and secure wake-up packets. As these labels suggest, a difference between non-secure and secure wake-up packets is that secure wake-up packets have a security feature that validates the execution of remote wake-up operations. This security feature serves to restrict remote wake-up operations to authorized users.

NON-SECURE WAKE-UP PACKET

FIG. **3** shows the data section of a non-secure wake-up packet **32** for remotely waking up a station on the LAN **24** such as the desktop computer **14**. The non-secure wake-up packet **32** includes a portion **34** having a synchronization sequence **36** and a MAC address sequence **38**. A conventional synchronization sequence **36** contains six octets of all "1"s data, i.e., FFh FFh FFh FFh FFh FFh. The synchronization sequence **36** signals the start location for the MAC address sequence **38** in the packet **32** and notifies the desktop computer **14** that a potential wake-up packet has been received. The synchronization sequence **36** and MAC address sequence **38** are what distinguish non-secure wake-up packets **32** and, similarly, secure wake-up packets from other types of packets sent to the desktop computer **14**.

The MAC address sequence **38** follows the synchronization sequence **36**. The MAC address sequence **38** includes sixteen successive repetitions of the six-octet MAC address of the desktop computer **14**. A non-secure wake-up packet **32** with valid synchronization **36** and MAC address sequences **38** is a valid wake-up packet.

An error detection code **40**, four octets in size, is included at the end of the packet **32**. Typically, there is but one error detection code **40** per non-secure wake-up packet **32**. Also, the non-secure wake-up packet **32** can have other data following the MAC address sequence **38** and preceding the error detection code **40**. Schemes for calculating the error detection code **40** from the data contents of the non-secure wake-up packet **32** are known in the art. One exemplary scheme is cyclic redundancy code (CRC). The above-described portion **34** can be anywhere in the data section of the non-secure wake-up packet **32**.

For example, the portion **34** of a non-secure wake-up packet **32** directed to the desktop computer **14** having a MAC address of 01h 02h 03h 04h 05h 06h would include the following:

FF	FF	FF	FF	FF	FF	01	02	03	04	05	06	01	02	03	04	05	06	01	02	03	04
05	06	01	02	03	04	05	06	01	02	03	04	05	06	01	02	03	04	05	06	01	02
03	04	05	06	01	02	03	04	05	06	01	02	03	04	05	06	01	02	03	04	05	06
01	02	03	04	05	06	01	02	03	04	05	06	01	02	03	04	05	06	01	02	03	04
05	06	01	02	03	04	05	06	01	02	03	04	05	06.								

A non-secure wake-up packet **32** can be made to remotely wake up multiple stations on the LAN **24**. The data section of such a non-secure wake-up packet **32** would include an appropriate portion like portion **34** for each targeted receiving station. Each appropriate portion would include a MAC address sequence **38** tailored accordingly to correspond to the MAC address of the station specifically targeted by that appropriate portion. Non-secure wake-up packets **32** that address multiple stations have only one error detection code **40**, which is included at the end of the non-secure wake-up packet **32**.

SECURE WAKE-UP PACKET

FIG. **4** shows the data section of a secure wake-up packet **42** for remotely waking up a station such as the desktop computer **14**. The secure wake-up packet **42** includes a portion **44** having a synchronization sequence **46**, a MAC address sequence **48**, and a password sequence **50**. The portion **44** can be anywhere in the data section of the secure wake-up packet **42**. Like the non-secure wake-up packet **32**, an error detection code **52** is included at the end of the secure wake-up packet **42**. The synchronization sequence **46**, MAC address sequence **48** and error detection code **52** are analogous to their counterparts in the non-secure wake-up packet **32**. A secure wake-up packet **42** with valid synchronization **46** and MAC address sequences **48** is a valid wake-up packet, but still may be an invalid secure wake-up packet. A valid secure wake-up packet also requires a valid password sequence **50**.

The password sequence **50** follows the MAC address sequence **48** and has a predetermined relationship with a password required to wake up the desktop computer **14**. In the preferred embodiment, the password sequence **50** contains six octets of data and needs to match the password required to wake up the system. For example, if the required password is ABh CDh EFh FEh DCh BAh, then the password sequence **50** must be ABh CDh EFh FEh DCh BAh. Other types of predetermined relationships between the password sequence **50** and the required password are virtually limitless. Some examples of other predetermined relationships include having the password sequence **50** be a certain number of repetitions of the required password; or an encrypted version of the required password; or a reversed

order of the required password; or even combinations of such relationships. Such predetermined relationships could require longer or shorter password sequences **50** than the six octets of the preferred embodiment.

Using the MAC address of the non-secure wake-up packet **32** example, the portion **44** of an exemplary secure wake-up packet **42** directed to the desktop computer **14** requiring a password of ABh CDh EFh FEh DCh BAh would include the following:

FF	FF	FF	FF	FF	FF	01	02	03	04	05	06	01	02	03	04	05	06	01	02	03	04
05	06	01	02	03	04	05	06	01	02	03	04	05	06	01	02	03	04	05	06	01	02
03	04	05	06	01	02	03	04	05	06	01	02	03	04	05	06	01	02	03	04	05	06
01	02	03	04	05	06	01	02	03	04	05	06	01	02	03	04	05	06	01	02	03	04
05	06	01	02	03	04	05	06	01	02	03	04	05	06	AB	CD	EF	FE	DC	BA.		

Secure wake-up packets **42** can be developed to securely and remotely wake up multiple stations on the LAN **24**. These secure wake-up packets **42** would include an appropriate portion like portion **44** for each intended station. Each appropriate portion would include the MAC address sequence **48** and password sequence **50** specifically needed for waking up the station targeted by that appropriate portion. The appropriate portions may immediately follow each other in the data section of the secure wake-up packet **42**, or be separated by other data. Other implementations may omit repeating the synchronization sequence **46** for each appropriate portion beyond the first indication of the synchronization sequence **46** in the data section of the secure wake-up packet **42**. Secure wake-up packets **42** for addressing multiple stations have only one error detection code **52**, which appears at the end of the secure wake-up packet **42**.

ELECTRICAL POWER STATES

FIG. **5** shows a state diagram **54** including four distinct electrical power states in which the desktop computer **14** is capable of operating. Each of the electrical power states represents an extent to which the desktop computer **14** is provided electrical power. The electrical power states include an OFF state **56**, a SLEEP state **58**, an AWAKE state **60** and an ON state **62**.

In the OFF state **56**, the desktop computer **14** is for the most part without electrical power, except for, perhaps, sufficient DC battery power to perform the most basic of functions such as maintaining a clock. The desktop computer **14** enters the OFF state **56** from any of the other power states **58–62** whenever the desktop computer **14** is disconnected from an electrical power source, such as when the desktop computer **14** is unplugged from an electrical outlet or when the electrical power source fails. Once electrical power is restored, the desktop computer **14** can return to the electrical power state in which it operated prior to the loss.

In the SLEEP state **58**, electrical power is provided to a sufficient portion of the desktop computer **14** so that the desktop computer **14** is able to monitor network traffic on the communication link **26**. According to the principles of the invention, it is while operating in the SLEEP state **58** that the desktop computer **14** can detect and examine wake-up packets addressed to the desktop computer **14**. The desktop computer **14** enters the SLEEP state **58** from the AWAKE **60** upon the completion of a remote wake-up operation or from the ON state **62** when the desktop computer **14** is locally turned off (i.e., via a power switch on the computer **14**).

In the AWAKE state **60**, electrical power is provided to other portions of the desktop computer **14** so that the desktop computer **14** can execute basic computing operations, such as reading and writing to system firmware or memory. Still other portions of the desktop computer **14**, for example, a display device or keyboard (not shown in the Figures), may remain without electrical power or be disabled. Implementations can vary as to how much of the desktop computer **14** remains disabled or without electrical power. In the preferred embodiment, the desktop computer **14** is not sufficiently functional to interact with a local user while operating in the AWAKE state **60** because the display device and the keyboard are disabled. The desktop computer **14** can even appear to be turned off.

To enter the AWAKE state **60**, the desktop computer **14** must receive a valid non-secure or valid secure wake-up packet **32**, **42** while operating in the SLEEP state **58**. Because the valid wake-up packet **32**, **42** wakes up the desktop computer **14**, a network administrator is able to remotely access the desktop computer **14** with the desktop computer **14** maintaining an appearance of being turned off.

In the ON state **62**, the desktop computer **14** is fully operational, both for remote and local usage. Electrical power is provided to every portion of the desktop computer **14** where the power is necessary to provide the full functional capabilities of the desktop computer **14**. To enter the ON state **62**, the desktop computer **14** is locally turned on while operating in the SLEEP state **58**. Locally turning-on the desktop computer **14** entails pressing a power switch at the desktop computer **14** as described in more detail below. In an alternative embodiment, a valid wake-up packet **32** or **42** can cause the desktop computer **14** to enter the ON state **62** from the SLEEP state **58**.

DESKTOP COMPUTER

FIG. **6** shows the desktop computer **14** of FIG. **2** in more detail. The desktop computer **14** includes a network interface **64** that is coupled to the LAN **24** of FIG. **2** via the communication link **26**. The network interface **64** is implemented as a single chip integrated circuit such as the 21143 network interface controller chip developed by Digital Equipment Corporation. Other implementations may similarly produce the functionality of the network interface **64** using multiple components.

The network interface **64**, power-control circuitry **66**, a serial nonvolatile RAM (NVRAM) **65**, a basic input/output system read-only memory (BIOS ROM) **74**, write-protect circuitry **76**, a processor **78**, a main memory **80** and a disk **82** are connected by a system bus **84** upon which these components transmit and receive address, data and control signals.

The serial nonvolatile memory (NVRAM) **65** is coupled to the network interface **64** by a dedicated serial line **67**. The NVRAM **65** records any parameters that control the operation of the network interface **64**. The NVRAM **65** also stores the MAC address of the desktop computer **14**. In an alternative embodiment, the NVRAM **65** can be omitted from the desktop computer **14**, and such information stored instead in the BIOS ROM **74**.

The network interface **64** is connected to the power-control circuitry **66** by a signal line **68**. A power switch **70** is connected to the power-control circuitry **66** by another signal line **72**. The power switch **70** provides a signal on

signal line **72** to the power-control circuitry **66** each time the power switch **70** is pressed.

The power-control circuitry **66** includes registers **102** and **104**. The register **102** records the current electrical power state of the desktop computer **14**. The register **104** records which component has signaled the power-control circuitry **66** to wake up the desktop computer **14**.

As described further below, both the network interface **64** and the power switch **70** can each independently signal the power-control circuitry **66** to wake up the desktop computer **14**. There may be other components in the desktop computer **14**, in addition to the network interface **64** and the power switch **70**, that can signal the desktop computer **14** to wake up. The register **104** has a single bit for each such component capable of providing such a wake-up signal. In the present illustration, the register **104** includes two bits, one for the network interface **64**, the other for the power switch **70**. The appropriate bit can be set high in response to a wake-up signal from the network interface **64** or the power switch **70**. When the bit for the network interface **64** is set, the register **104** thus indicates that the desktop computer **14** has received a valid wake-up packet **32** or **42**.

An alternative implementation may instead distribute the single bits of register **104** among several registers rather than only in the register **104**. In still another implementation, the register **104** may be implemented in other components rather than in the power-control circuitry **66**, such as in the network interface **64**.

A power converter **88** couples input electrical power **86** to the network interface **64**, the NVRAM **65** and the power-control circuitry **66** by an auxiliary power bus **94**. The power converter **88** also selectively couples the input electrical power **86** to other portions of the desktop computer **14**, such as the BIOS ROM **74**, the write-protection circuitry **76**, the processor **78**, the main memory **80** and the disk **82** by a main power bus **96**. Both the auxiliary power bus **94** and the main power bus **96** are connected to the network interface **64**. The input electrical power **86** can be AC electrical power or DC battery power. The power converter **88** is also coupled to the network interface **64** by a control line **90** and to the power-control circuitry **66** by a bus **92**.

The BIOS ROM **74** can be any of a variety of non-volatile memory devices that can be reprogrammed including electrically erasable read-only memory (EEPROM), or flash-erasable programmable read-only memory (FLASH) . By way of example, the BIOS ROM **74** is a FLASH device. The BIOS ROM **74** contains the basic input/output system (BIOS) of the desktop computer **14**. The BIOS includes the fundamental set of instructions and data for the particular architecture of the desktop computer **14**, including details as to how data are to be presented to the processor **78**.

The BIOS ROM **74** also contains a set-up program for selectively enabling or disabling the parameters that control the operation of the network interface **64**. In the above-mentioned alternative embodiment wherein the NVRAM **65** is omitted, such operating parameters can instead be stored in the BIOS ROM **74**.

The write-protection circuitry **76** controls whether the BIOS ROM **74** is in a protected or an unprotected state. A protected state is one wherein writes to the BIOS ROM **74** are prohibited, thereby preventing any alterations to contents of the BIOS ROM **74**. Conversely, the contents of the BIOS ROM **74** can be altered when the BIOS ROM **74** is in the unprotected state. There are various techniques available in the industry by which the write-protection circuitry can be implemented. For example, see pages 2–42 to 2–48 of the 1994 databook, *Flash Memory*: Volume I by Intel®. The default state of the BIOS ROM **74** is protected.

The processor **78** may be a single-chip integrated circuit device with an associated instruction set and operating system. An example is the PentiumTM processor produced by Intel® Corporation.

The main memory **80** includes high-speed dynamic random access memories (DRAMs) for storing the instructions and data that constitute the operating system associated with the processor **78**. The operating system includes computer programs which control the operation of the desktop computer **14** such as opening and closing files, sending files to a printer, and copying and deleting files. The disk **82** is a magnetic disk which serves as the initial storage for the operating system of the desktop computer **14**.

Operation with respect to FIG. **6** is now described. Waking up the desktop computer **14** means providing electrical power to a particular portion of the desktop computer **14** so that the desktop computer **14** can bootstrap. Upon completion of the bootstrapping, the operating system is in control of the desktop computer **14**. In the preferred embodiment, this particular portion of the desktop computer **14** includes the BIOS ROM **74**, the processor **78**, the main memory **80** and the disk **82**. Examples of when the desktop computer **14** wakes up are when the electrical power state of the desktop computer **14** changes from the SLEEP state **58** to either the AWAKE **60** or ON state **62**.

NETWORK INTERFACE

The network interface **64** is capable of operating in at least two modes: a standard mode and a remote access control mode. Whenever the desktop computer **14** is operating in either the AWAKE **60** or ON **62** state, the network interface **64** operates in the standard mode. In the standard mode, the network interface **64** processes network traffic on the LAN **24** like a conventional network interface.

The network interface **64** can operate in either the remote access control mode or the standard mode when the desktop computer **14** is in the SLEEP state **58**. If configured in the remote access control mode, the network interface **64** monitors network traffic on the communication link **26** for wake-up packets **32**, **42** addressed to the desktop computer **14**, but if in the standard mode, the network interface **64** ignores the network traffic. Thus, remote wake-up of the desktop computer **14** can be deactivated by not operating the network interface **14** in remote access control mode when the computer **14** is in the SLEEP state **58**.

When the network interface **64** is operating in the remote access control mode, the network interface **64** can also selectively provide two modes of remote access: non-secure mode and secure mode. In the non-secure mode, the network interface **64** issues a wake-up signal to the power-control circuitry **66** upon receiving a valid wake-up packet. This valid wake-up packet can be either a non-secure **32** or secure wake-up packet **42**. In the secure remote access mode, the network interface **64** must receive a valid secure wake-up packet **42** in order to issue the wake-up signal. The flexibility of the network interface **64** to selectively provide secure and non-secure remote wake-up may provide backward compatibility with software that uses only the non-secure method of remote wake-up.

FIG. **7** shows the network interface **64** of FIG. **6** in greater detail. The network interface **64** includes a state machine **106**, command and status registers **108**, lockout circuitry **110** and power sense circuitry **128** connected to each other by a controller bus **112**.

The state machine **106** is coupled to the LAN **24** by the communication link **26** and to the power-control circuitry **66** by signal line **68**. The state machine **106** receives the wake-up packets on the communication link **26**. The state

machine **106** has access to the operating parameters of the network interface **64** and the MAC address stored in the NVRAM **65** through the NVRAM interface **107**. The NVRAM interface **107** is coupled to the NVRAM **65** via the dedicated serial access line **67**.

Command and status registers (CSRs) **108** include a network interface status register **114**, a password register **116**, a lock register **118** and a hostile attack counter **120**. The CSRs **108** are coupled to the system bus **84**. The network interface status register **114** is a two-bit register; one bit is used to indicate whether the network interface **64** is operating in the remote access control mode or the standard mode, and the other bit to indicate whether the mode of remote access is non-secure or secure.

The password register **116** stores a password required to wake up the desktop computer **14** when operating in secure remote access mode. The password is a randomly-generated forty-eight bit number, i.e., six octets long. A forty-eight bit value provides 281×10^{12} possible unique passwords. Other implementations may provide for longer or shorter passwords. The password register **116** does not allow the password to be read by any device external to the network interface **64**. The state machine **106** has access to the password for comparing against the password sequences **50** of secure wake-up packets **42**.

In the present illustration, the processor **78** executes software to produce a password. In another embodiment, the password can be generated at the workstation **12** and transmitted to the desktop computer **14** for storage. In such an embodiment, the workstation **12** should first encrypt the password to preserve the secrecy of the password during transmission. The desktop computer **14** can then either decrypt the password or store the password in the encrypted form.

Secure wake-up packets **42** must include a password sequence **50** that has a predetermined relationship to the password in the password register **116**. A potential secure wake-up packet **42** may have valid synchronization and MAC address sequences **46**, **48** and still be an invalid secure wake-up packet **42** because the potential secure wake-up packet lacked the password sequence **50** altogether or specified a password sequence **50** with an erroneous password.

The lock register **118** is a single bit register which indicates whether or not writes to the password register **116** are allowed. Locking out writes to the password register **116** prohibits unauthorized alteration of the password stored in the password register **116**. Writes to other registers of the CSRs **108** may also be locked, depending upon the implementation of the network interface **64**. If so, the lock register **118** can be modified to reflect the status of the other CSRs **108** as well. One simple exemplary modification is to increase the number of bits in the register **118** to accommodate any additional CSR **108** to be protected.

The hostile attack counter **120** can be an 8-bit register for maintaining a count of the hostile attacks processed by the state machine **106**. In the computer industry, a hostile attack is an attempt to bypass the security mechanisms of the desktop computer **14**. In the exemplary embodiment, each invalid secure wake-up packet **42** is considered to be a hostile attack and causes the hostile attack counter **120** to be incremented. An invalid secure wake-up packet **42** is a valid wake-up packet with valid synchronization and MAC address sequences **46**, **48**, but lacks a valid password sequence **50**. (Packets that lack either a valid synchronization sequence **46** or a valid MAC address sequence **48** are, in fact, not valid wake-up packets, and, consequently, not seen by the state machine **106** to be attempts to wake up the desktop computer **14**. Such packets do not affect the hostile attack counter **120**.)

The lockout circuitry **110** includes a lockout counter **122** and a lockout timer **126** for limiting the frequency of hostile attacks upon the desktop computer **14**. A purpose of the lockout circuitry **110** is to frustrate a hostile attacker who uses brute force tactics to breach the security of the desktop computer **14** by continuously submitting secure wake-up packets **42** which try all possible password combinations. The lockout circuitry **110** tolerates a specified number of invalid secure wake-up packets **42** before temporarily causing subsequently received packets, wake-up packets or otherwise, to be ignored.

The lockout counter **122** maintains a count of the number of hostile attacks for comparison with the specified number of tolerated invalid secure wake-up packets. For example, if four invalid secure remote access attempts are to be tolerated before subsequent attempts are locked out, a 2-bit counter can be used to implement the lockout counter **122**. Another 2-bit counter may be used to implement a lockout limit register **124** for storing the maximum limit of tolerated attacks.

The lockout timer **126** maintains the lockout time for which packets arriving at the state machine **106** are to be ignored. The lockout timer **126** may be any simple timing device or a timing device that is responsive to the clock of the desktop computer **14** or may even be the clock of the desktop computer **14**. The lockout time is specified so as to limit the frequency at which invalid secure wake-up packets **42** can be processed by the state machine **106**. By limiting the permissible rate of wake-up attempts, the lockout circuitry **110** makes it highly unlikely that attempts to breach the security of the desktop computer **14** will succeed. For example, predetermining the lockout limit register **124** and the lockout timer **126** so as to tolerate **535** attacks per minute means that a brute force hostile attack would have to be sustained for one year just to have a one in a million chance of succeeding. (535 attacks/minute*525600 minutes/year= 281×10^{6} attacks per year, which is one-millionth the number of possible passwords.) Once the lockout time has expired, the lockout counter **122** can be reset to zero. Other embodiments can use different criteria to reset the lockout counter **122** to zero, such as waiting until a valid secure wake-up packet **42** is received or until a period has elapsed during which no invalid secure wake-up packets **42** are received. Such implementations would even further offset the concentrated nature of brute force attacks by having every subsequent invalid secure wake-up packet **42** beyond the limit in the lockout limit register **124** initiate another temporary lockout.

The power sense circuitry **128** is coupled to the main power bus **96**. The power sense circuitry **128** detects when the electrical power supplied by the main power bus **96** drops below 1 volt from a nominal voltage level (e.g., 3.3 volts), and subsequently signals the state machine **106** and the power switchover circuitry **130** on controller bus **112**.

The power switchover circuitry **130** is coupled to the power converter **88** for receiving the power-reset signal on control line **90** and electrical power from the auxiliary **94** and main **96** power busses. The power switchover circuitry **130** controls the source of electrical power for the components **106**, **108**, **110**, **128** of the network interface **64** and distributes the electrical power on supply line **132**.

The power switchover circuitry **130** distributes electrical power provided on the auxiliary power bus **94** when the desktop computer **14** is operating in the SLEEP state **58**. Upon receiving a power reset signal **90**, the power switcho-

ver circuitry switches to distributing electrical power provided on the main power bus **96**. The power switchover circuitry **130** returns to distributing the electrical power provided on the auxiliary power bus **94** in response to receiving a signal from the power sense circuitry **128** on the controller bus **112** that the electrical power on the main power bus has dropped below 1 volt.

FIG. **8** shows workstation **12** of FIG. **2** in more detail. For purposes of illustration, the workstation **12** is being used as an exemplary remote management console to demonstrate the principles of the invention. Any station capable of generating and transmitting a wake-up packet to another station, such as the desktop computer **14**, can serve the same purpose. The administration of resources on the LAN **24** can be remotely managed from the workstation **12**.

The workstation **12** includes a processor **136**, a memory **138** and a network interface **140** connected to each other by a bus **142**. The processor **136** may be a single-chip integrated circuit device with an associated instruction set and operating system. The memory **138** may be comprised of high-speed dynamic random access memories (DRAMs) for storing instructions and data. The data includes new and old passwords required to wake up the desktop computer **14** and associations between such passwords and the MAC address of the desktop computer **14**. The instructions comprise application software which access the data to generate and transmit wake-up packets to the desktop computer **14** over the network.

The network interface **140** of the workstation **12** interfaces the LAN **24** by communication link **26** by which the network interface **140** transmits and receives packets from stations on or external to the LAN **24**.

Operation is now described in connection with FIGS. **3–8**. As previously discussed, the desktop computer **14** can operate in any one of at least four electrical power states **56–62**.

SLEEP STATE OPERATION

When the desktop computer **14** is operating in the SLEEP state **58**, the power converter **88** provides input electrical power **86** to the network interface **64**, the NVRAM **65**, and the power-control circuitry **66** by an auxiliary power bus **94**. The other portions of the desktop computer **14**, such as the BIOS ROM **74**, write protect circuitry **76**, processor **78**, main memory **80** and disk **82**, are without electrical power. Consequently, the network interface **64** is able to detect and process wake-up packets on the communication link **26** while much of the desktop computer **14** is without electrical power.

In the preferred embodiment, the network interface **64** must be operating in the remote access control mode in order to detect wake-up packets. In the SLEEP state **58**, packets received when the network interface **64** is not in the remote access control mode are ignored.

When the network interface **64** is in remote access control mode, the state machine **106** examines the destination field of the packet header for an Ethernet® broadcast address or the MAC address of the desktop computer **14**. The state machine **106** references the MAC address of the desktop computer **14** stored in the NVRAM **65** to evaluate the destination address. The state machine **106** further scans packets addressed to the desktop computer **14** to determine the packet type. Packets that have a valid synchronization sequence **36**, **46** and a valid MAC address sequence **38**, **48** are considered to be potential wake-up packets. Packets lacking either a valid synchronization **36**, **46** or MAC address sequence **38**, **48** are discarded.

The state machine **106** considers any received potential wake-up packet to be an attempt to remotely wake up the desktop computer **14**. The state machine **106** determines from the network interface status register **114** whether the network interface **64** is in non-secure or secure remote access mode. When the network interface **64** is providing non-secure remote access, valid synchronization **36**, **46** and MAC address sequences **38**, **48** are sufficient to wake up the desktop computer **14**. Thus, the state machine **106** then issues the wake-up signal on signal line **68** to the power-control circuitry **66**.

If instead the network interface **64** is providing secure remote access, then the state machine **106** further scans the data portion of the wake-up packet for a password sequence **50** that has a predetermined relationship to the password stored in the password register **116**. If the predetermined relationship is found, then the state machine **106** issues the wake-up signal on signal line **68** indicating that the network interface **64** has received a valid secure wake-up packet **42**.

In the event the potential wake-up packet lacks a password sequence **50** or the password sequence **50** does not have the predetermined relationship to the password stored in the password register **116**, such potential wake-up packet is deemed to be a hostile attack upon the desktop computer **14**, and the hostile attack counter **120** and the lockout counter **122** are incremented.

Should the count in the lockout counter **122** reach the predetermined limit, the lockout circuitry **110** temporarily disables the state machine **106** from processing any more packets for a predetermined lockout time. When the lockout time expires, the state machine **106** can again process subsequently received packets. The lockout circuitry **110** resets the lockout counter **122** to **0**. The lockout counter **122** may also be reset to **0** whenever a predetermined period of time has elapsed wherein no invalid secure wake-up packets **42** have been processed by the state machine **106**. In other words, although the count in the lockout counter **122** has not yet reached the predetermined limit so as to start the lockout timer **126**, the count may be reset to **0** after a specified quiet period with no hostile attacks. Another timer (not shown in FIG. **7**) of the network interface **64** may be used to measure such quiet periods devoid of hostile attacks. This will cancel any improper incrementing of the lockout counter **122** that is caused by spurious data on the communication link **26**.

Two ways for waking up the desktop computer **14** are hereinafter described.

THE LOCAL POWER SWITCH

Locally pressing the power switch **70** at the desktop computer **14** when the desktop computer **14** is operating in the SLEEP state **58** wakes up the desktop computer **14**. Pressing the power switch **70** signals to the power-control circuitry **66** on signal line **72** to provide electrical power to other portions of the desktop computer **14**. In this instance, waking up the desktop computer **14** results in changing the electrical power state in which the computer **14** operates from the SLEEP **58** to the ON state **62**.

SENDING A WAKE-UP PACKET

Sending an appropriate valid wake-up packet to the network interface **64** operating in remote access control mode also wakes up the desktop computer **14** according to the principles of the invention. In response to the appropriate wake-up packet, the network interface sends a wake-up signal to the power-control circuitry **66**. In this instance, waking up the desktop computer **14** results in changing the electrical power state from the SLEEP **58** to the AWAKE state **60**. As mentioned above, in an alternative embodiment, the wake-up packet can instead be used to cause the desktop computer **14** to enter the ON state **62**.

Thus both the power switch **70** and the network interface **64** can produce a signal that causes the power-control

circuitry **66** to wake up the desktop computer **14**. In response to a wake-up signal from either the power switch **70** or the network interface **64**, the power-control circuitry **66** provides a power-up signal **98** to the power converter **88** via bus **92**. Also, the appropriate bit in the register **104** is set to indicate which component **64**, **70** has signaled for the wake-up, and the contents of the register **102** are set to reflect the electrical power state of the desktop computer **14**.

The power converter **88**, in response to the power-up signal **98**, supplies electrical power to other portions of the desktop computer **14**, such as the BIOS ROM **74**, the write-protection circuitry **76**, the processor **78**, the main memory **80** and the disk **82**, by the main power bus **96**. The main power bus **96** also carries main electrical power to the network interface **64**.

Once the main electrical power on the main power bus **96** is stable, the power converter **88** sends a power-reset signal to the network interface **64** on a control line **90**. The power switchover circuitry **130** of the network interface **64** receives the power-reset signal and switches over the supply **132** of electrical power for the network interface **64** from the electrical power provided on auxiliary power bus **94** to the electrical power on the main power bus **96**. The state machine **106** also unlocks the password register **116** and changes the lock register **118** accordingly.

In the case where the network interface **64** is operating in the remote access control mode, the power-reset signal also causes the network interface **64** to exit the remote access control mode. As a result, the network interface **64** handles subsequent wake-up packets as normal network traffic, and not as wake-up packets, for as long as the desktop computer **14** remains operating in either the AWAKE **60** or ON states **62**.

A result of distributing electrical power to the other portions **74**–**82** of the desktop computer **14** is to initiate a bootstrap sequence. The processor **78** then performs the bootstrapping operations of the desktop computer **14** by executing instructions stored in the BIOS ROM **74**. Because main memory **80** usually provides faster access to data than BIOS ROM **74**, the BIOS is copied into and executed from the main memory **80**. A copy of the BIOS can also be stored on disk **82**.

Typical bootstrap operations include checking the keyboard connection, testing the main memory **80** and performing other diagnostics. A bootstrap sequence may implement security features that require local entry of a user or administrator password before bootstrapping of the desktop computer **14** can continue. The BIOS ROM **74** instructions direct the processor **78** to examine the register **104** to determine the source initiating the wake-up of the desktop computer **14**. If the power switch **70** is that source, the bootstrapping includes performing the security features.

Also, at a point in the bootstrap sequence, the bootstrapping pauses to allow selective execution of the set-up program. Execution of the set-up program begins by clicking an input device or pressing a particular key on the keyboard during this pause. A locally-entered password may be required to continue execution. The set-up program is used to select whether the network interface **64** is to operate in remote access control mode, and, if so, whether in non-secure or secure mode. The selected operating mode is subsequently stored in the NVRAM **65**. In the alternative embodiment without the NVRAM **65**, the operating mode can be stored in another non-volatile memory, such as the BIOS ROM **74**.

If instead the network interface **64** initiated the wake-up, then those BIOS ROM **74** instructions that perform these local user and administrative security features are bypassed. This avoids suspending the bootstrapping sequence while awaiting local entry of an user password. Since the station that sent the wake-up packet to the network interface **64** to initiate the wake-up may be physically remote from the desktop computer **14**, local entry of the password may be impractical. Also, the processor **78** can then execute BIOS instructions that ignore or disable user inputs from local input devices such as the keyboard or mouse before the operating system gains control of the desktop computer **14**. As a result, no one physically present at the desktop computer **14** should be able to obtain supply inputs to the desktop computer **14** while a remote wake-up operation is in progress.

The contents of register **104** also determine whether the write-protection circuitry **76** protects or unprotects the BIOS ROM **74**. If the power switch **70** bit of register **104** indicates that the power switch **70** is the source of the wake-up, the write-protection circuitry **76** is configured to protect the BIOS ROM **74**. If instead the bit for the network interface **64** is set, the write-protect circuitry **76** puts the BIOS ROM **74** in the unprotected state (i.e., writeable).

During the initial configuration of the desktop computer **14**, another bootstrap operation stores the MAC address of the desktop computer **14** in the NVRAM **65** for persistent storage. Once the MAC address is stored in the NVRAM **65**, this operation need not be performed in subsequent bootstraps of the computer **14**. In the alternative embodiment wherein the NVRAM **65** is omitted, this operation can store the MAC address elsewhere in the network interface **64** such as in a CSR **108**.

After the execution of such bootstrap operations, the BIOS instructions then direct the processor **78** to copy the operating system from the disk **82** into the main memory **80** and to continue the bootstrapping by executing the operating system instructions. Thus, the operating system gains control of the operations of the desktop computer **14**. The operating system maintains control of the desktop computer **14** until electrical power is removed from the main power bus **96**.

Once the desktop computer **14** is in the AWAKE state **60** or ON state **62**, the network interface **64** exits the remote access control mode, if so configured, and operates in the standard operating mode for as long as the desktop computer **14** is in the AWAKE **60** or ON state **62**. Thus, the network interface **64** no longer handles subsequently received wake-up packets as wake-up packets, but rather as normal network traffic.

In the event a remote wake-up operation has awakened the desktop computer **14**, then write protection circuitry **76** has put the BIOS ROM **74** in the unprotected state. A network administrator can subsequently modify the BIOS ROM **74** from a remote station **12** as described below. During remote programming of the BIOS ROM **74**, access to the BIOS ROM **74** for performing other computer-related operations is prohibited. However, these operations are not interrupted since the contents of the BIOS ROM **74** have been copied into the main memory **80** and can be accessed there.

an exemplary programming operation that reprograms the BIOS ROM **74** can proceed as follows:

From the workstation **12**, the network administrator transmits instructions to the desktop computer **14** that are executed by the operating system of the desktop computer **14**. The instructions direct the desktop computer **14** to examine the BIOS ROM **74** to determine whether the BIOS ROM **74** needs updating. If the BIOS ROM **74** needs

updating, workstation **12** then transfers new BIOS instructions and data to the desktop computer **14** over the LAN **24** along with utility software necessary to accomplish the reprogramming. The processor **78** copies the new BIOS instructions and data to main memory **80** (or a disk **82**). The utility software instructs the processor **78** to modify the BIOS instructions and data in the BIOS ROM **74** as required to complete the new BIOS. Such modifications may include copying a revision history for the BIOS and recording serial numbers of components in the desktop computer **14** such as a motherboard.

Subsequently, the new BIOS is programmed into the BIOS ROM **74**. As previously mentioned, the BIOS ROM **74** is a FLASH device capable of being reprogrammed. The manner of programming a FLASH device is well known in the art. The data in the BIOS ROM **74** is verified to ensure that the programming occurred successfully. If the verification fails, then the old BIOS instructions and data are reprogrammed into the BIOS ROM **74**. The old BIOS is available in the main memory **80** or disk **82** where earlier the old BIOS had been copied. The remote programming operation can be recorded in a portion of the BIOS ROM **74** reserved for logging revisions of the BIOS. The desktop computer **14** then notifies the workstation **12** of the success or failure of the reprogramming operation.

Two ways of placing the desktop computer **14** into the SLEEP state **58** are described below.

PRESSING THE POWER SWITCH

Pressing the power switch **70** when the desktop computer **14** is in the ON state **62** sends a signal on signal line **72** to the power-control circuitry **66** that changes the data stored in the register **102** to reflect the SLEEP state **58**. In response, the desktop computer **14** enters the SLEEP state **58**.

COMPLETING THE REMOTE WAKE-UP OPERATION

The second is accomplished upon completing the remote wake-up operation. Various techniques may be used to indicate the termination of the remote wake-up operation. One technique is to send a particular message to the network interface **64** indicating that the remote wake-up operation is complete. Another is to use a particular period of inactivity between the station that sent the wake-up packet and the desktop computer **14** to terminate the remote wake-up operation.

Whether on account of the power switch **70** or the termination of the remote wake-up operation, the processor **78** executes a power-down sequence. The instructions for performing the power-down sequence can be from either the BIOS or the operating system or both. The power-down sequence causes a power-down signal to be sent to the power-control circuitry **66** on the system bus **84**. The power-control circuitry **66** then issues a power-down signal **100** on bus **92** to the power converter **88** to turn off the electrical power on the main power bus **96**.

When the power converter **88** ceases supplying electrical power on the main power bus **96**, the power sense circuitry **128** senses when the electrical power on the main power bus **96** falls below 1 volt and accordingly signals the state machine **106** and power switchover circuitry **130** on the controller bus **112**. The state machine **106** responds to this notice of power loss from the main power bus **96** by copying the operating mode of the network interface **64** from the NVRAM **65** into the network interface status register **114**. Thus, the network interface **64** is automatically configured to operate in remote access control mode when the desktop computer **14** enters the SLEEP state **58**, if in fact this was the selected and stored operating mode. Also, the power switchover circuitry **130** switches back to distributing the electrical power on auxiliary power bus **94**. In the alternative embodiment wherein the NVRAM **65** is omitted from the desktop computer **14**, the operating mode is instead obtained from the BIOS ROM **74**.

POWER FAILURE

Loss of input electrical power **86** to the desktop computer **14** causes the desktop computer **14** to enter the OFF state **56**. This power failure may occur while the desktop computer is operating in any of the other electrical power states **58–62**. Without electrical power, the network interface **64** loses any programmed configuration data, such as the operating mode and other network parameters. Non-volatile memory, however, such as the NVRAM **65** and the BIOS ROM **74**, maintain their data.

With the restoration of input electrical power **86** to the desktop computer **14** (and the network interface **64**), the desktop computer **14** reconfigures the network interface **64** according to the operating mode in which the network interface **64** was operating prior to the power failure. In the present embodiment, the state machine **106** reads the operating mode (and other parameters) from the NVRAM **65** over the bus **67** and copies the operating mode into the appropriate CSRs **108**, for instance, the operating mode is restored to the network status register **114**. In this manner the network interface **64** can be reconfigured for the remote access control mode without having to supply electrical power on the main power bus **96** and executing additional BIOS or operating system software.

In the alternative embodiment without the NVRAM **65**, in which the operating mode of the network interface **64** was stored in the BIOS ROM **74**, it is necessary for the power converter **88** to supply electrical power on the main power bus **96** so that the processor **78** can execute BIOS or operating system software that reconfigures the network interface **64** according to the operating mode.

If the desktop computer **14** was in the SLEEP state **58** at the time of the power failure, the desktop computer **14** returns to the SLEEP state **58** after the operating mode and other operating parameters are copied from the NVRAM **65** to the CSRs **108**. Optionally, the operating mode and parameters can be copied from the BIOS ROM **74**. Thus, the network interface **64** is configured with the appropriate operating mode for when the desktop computer **14** is operating in the SLEEP state **58**. If instead the desktop computer **14** was in the AWAKE **60** or ON state **62** prior to the power failure, the desktop computer **14** is allowed to bootstrap, as described above, and enter the ON state **62**.

FIG. **9** shows a flow chart **143** illustrating an exemplary method by which the workstation **12**, acting as a remote management console, remotely wakes up the desktop computer **14** over the LAN **24**.

In step **144**, the workstation **12** generates and issues either a non-secure **32** or secure **42** wake-up packet on communication link **26** intended for the desktop computer **14**.

Note that in the course of transmitting a secure wake-up packet **42** over the LAN **24**, the workstation **12** may compromise the secrecy of the password required to wake up the desktop computer **14** if the workstation **12** does not encrypt the password sequence **50**. This exposes the password sequence **50** to unauthorized reading by sophisticated eavesdroppers. This exposure is countered, however, by generating a new password each time the desktop computer **14** is awakened, as described in connection with FIG. **10** below. Hence, although an unauthorized user may eavesdrop on a secure wake-up packet **42** and steal the password sequence **50**, once the secure wake-up packet **42** causes the desktop computer **14** to wake-up, a new password is produced and the stolen password sequence **50** is rendered useless.

In step **146**, if the desktop computer is not in the SLEEP state **58**, but rather in the AWAKE **60** or ON state **62**, the wake-up packet **32** or **42** is handled as normal network traffic rather than as a wake-up packet(step **145**).

When the desktop computer **14** is operating in the SLEEP state **58**, the network interface **64** detects and processes the wake-up packet **32** or **42** if it is operating in the remote access control mode (step **148**). Otherwise, the wake-up packet **32** or **42** is ignored (step **150**).

When operating in remote access control mode, the network interface **64** determines whether the wake-up packet **32** or **42** qualifies as a valid wake-up packet (step **152**). The header of the wake-up packet **32** or **42** must comply with the requirements of the LAN **24** by indicating the source address, the destination address or broadcast address, and proper error detection code. The network interface **64** scans the data portion of the wake-up packet **32** or **42** for the synchronization sequence **36** or **46** followed by sixteen successive repetitions of the MAC address of the desktop computer **14**. The network interface **64** subsequently discards the wake-up packet **32** or **42** if it fails in any of the above-mentioned respects (step **151**).

Once the network interface **64** determines that a potential wake-up packet **32** or **42** has been received, the network interface status register **114** indicates whether the network interface **64** is providing non-secure or secure remote access (step **154**). The network interface **64** issues a wake-up signal to the power-control circuitry **66** to wake up the desktop computer **14** if the network interface **64** is providing non-secure remote access (step **156**). If the network interface **64** is providing secure remote access, the network interface **64** compares the six octets of data immediately following the MAC address sequence **46** in the data section of the wake-up packet **32** or **42** with the password stored in the password register **116** (step **158**). If the six octets match the password in the password register **116**, the network interface **64** issues a wake-up signal to the power-control circuitry **66** to wake up the desktop computer **14** (step **156**). Otherwise, the network interface **64** increments the hostile attack counter **120** and the lockout counter **122** (step **160**), and subsequently discards the wake-up packet **32** or **42** (step **151**).

FIG. **10** shows a flow chart **162** illustrating an exemplary method by which passwords are generated for use during secure remote accesses by the workstation **12** to the desktop computer **14**. The desktop computer **14** attempts to generate a new password upon each completion of a power cycle by the desktop computer **14**. In the present illustrated embodiment, a power cycle completes when the main power bus **96** changes from not supplying to supplying electrical power. Said another way, a power cycle completes each time the desktop computer **14** transitions from either the OFF **56** or SLEEP **58** state to either the AWAKE state **60** or ON **62** state (step **164**). Either way, components **74–82** coupled to the main power bus **96** go from being without electrical power to receiving electrical power.

In step **166**, the processor **78** determines whether the password register **116** is locked. A locked password register **116** indicates that the password stored therein has not yet been compromised. (As previously mentioned, receiving a secure wake-up packet **42** in which the password sequence **50** was not encrypted would compromise the password.) A reason for the password register **116** to still be locked is because a re-boot of the desktop computer **14** was initiated locally on the keyboard of the desktop computer **14**. Thus, a new password does not need to be generated and the password generation ends, leaving the desktop computer **14** to operate in either the AWAKE **38** or ON state **62** (step **168**). On the other hand, an unlocked password register **116** indicates a wake-up of the desktop computer **14** has occurred and a new password needs to be generated.

In step **170**, it is determined whether the network interface **64** is even configured to operate in the secure remote access for when the desktop computer **14** enters the SLEEP state **58**. If not, a new password is unnecessary.

In step **172**, the desktop computer **14** attempts to communicate with the workstation **12** over the LAN **24**. It is critical for the purposes of remote wake-up operations that each newly generated password be communicated between the workstation **12** and the desktop computer **14**. Hence, if such communication cannot be established, then the new password is not generated at this time. For example, when the desktop computer **14** is first added to the LAN **24**, the first time the desktop computer **14** is plugged into an electrical outlet and turned on, via the power switch **70**, the desktop computer **14** attempts to generate a password. However, at this time the desktop computer **14** lacks sufficient data about other stations on the LAN **24**, particularly the workstation **12** to which it must transmit any generated password. Thus, communication with the workstation **12** is not established, and the password generation ends. However, the desktop computer **14** remains on the LAN **24** and is able to learn the necessary network information in preparation for a subsequent power cycle.

In step **174**, the processor **78** executes software that randomly generates a new password. The new password is encrypted and sent by the desktop computer **14** to the workstation **12**. The new password is encrypted before being transmitted to the workstation **14** to preserve the secrecy of the new password during transmission over the LAN **24**.

In step **176**, the workstation **12** receives and decrypts the new password, and acknowledges receipt of the new password to the desktop computer **14**.

The desktop computer **14** receives the acknowledgment from the workstation **12**, and, in response, stores (step **178**) and locks (step **180**) the new password in the password register **116**. The lock register **118** is changed to indicate that the password is locked. When the password register **116** is locked, the network interface **64** ignores attempts by unauthorized software to disable secure remote access through the network interface status register **114** or the BIOS ROM **74**. This thwarts any attempts to bypass the password requirement of secure remote access by simply altering the status of the network interface **64** to provide non-secure remote access. This also prevents read and write access to the password register **116**.

In step **182**, the desktop computer **14** sends a signal to the workstation **12** indicating that the storing and locking of the new password was successfully completed.

The old password remains in effect until the step **178** of storing the new password in the password register **116** is successfully completed. If step **182** does not successfully complete there is uncertainty at the workstation **12** as to which password, the old or the new, is in effect. However, since the workstation **12** retains both the old and new passwords, both can be used in successive secure remote access attempts to determine which is the true password.

Should for any reason the password become unknown to the workstation **12**, the ability of the workstation **12** to remotely wake up the desktop computer **14** is only temporarily lost. The desktop computer **14** merely needs to undergo another power cycle in order to initiate the generation of a new password. This can be done by locally turning the desktop computer **14** off and on again via the power switch **70**. This induces the process described in FIG. **10**,

which synchronizes the newly generated password between the system receiving the packet and the system sending the packet.

For the purpose of illustration, FIG. **10** shows the desktop computer **14** generating and sending the new password to the workstation **12** over the network. In an alternative implementation, the workstation **12** can generate and send the password to the desktop computer **14**.

FIG. **11** shows a flow chart **184** illustrating an exemplary method for securely writing data to the BIOS ROM **74** of the desktop computer **14** over the LAN **24**. This method can also be used to securely write data to sensitive resources other than the BIOS ROM **74**. Thus, information that is critical to the proper and secure operation of the computer **14** (e.g., firmware, administration passwords, hardware configurations) can be modified by authorized remote users and protected from local and unauthorized remote users.

In step **186**, the power-control circuitry **66** receives a signal to wake up the desktop computer **14**. In step **188**, the source of the signal is stored in the appropriate bit of the register **104**. During the bootstrapping of the desktop computer, the processor **78** reads register **104** to determine the source of the signal **14** (step **190**).

If the source of the signal is the network interface **64**, the write protection circuitry **76** puts the BIOS ROM **74** in unprotected (i.e., writeable) state (step **192**). The network interface **64** would have issued the signal in response to receiving a valid wake-up packet **32** or **42** over the LAN **24**. Thus, updates to the BIOS ROM **74** can be performed remotely. If the network interface **64** issued the signal in response to a valid secure wake-up packet **42**, this further ensures these remote updates are authorized.

If the source of the signal is the power switch **70**, the write protection circuitry **76** puts the BIOS ROM **74** in the protected state wherein the contents of the BIOS ROM **74** cannot be altered (step **194**).

It is to be understood that the above-described embodiments are simply illustrative of the principles of the invention. Various other modifications and changes may be made by those skilled in the art which will embody the principles of the invention and fall within the spirit and the scope thereof.

What is claimed is:

1. A method for securely writing data over a network to a device in a system, comprising the steps of:

generating a signal to wake up the system;

determining whether the signal was generated in response to the system having received a wake-up packet from over the network; and

configuring the system to allow data to be written to the device if the signal was generated in response to the wake-up packet, otherwise prohibiting data from being written to the device.

2. The method according to claim **1** wherein the wake-up packet is a secure wake-up packet.

3. The method according to claim **1**, wherein the system includes a plurality of components that could have generated the signal to wake up the system, a particular one of the components having generated the signal, and further comprising the step of:

storing data that identify the particular component that generated the signal.

4. The method according to claim **3**, further comprising the steps of:

bootstrapping the system in response to the signal; and

reading the stored data during the bootstrapping.

5. The method of claim **3**, wherein the step of configuring allows data to be written to the device when the stored data identify a network interface as the particular component that generated the signal.

6. The method of claim **3**, wherein the step of configuring prohibits data from being written to the device when the stored data identify a power switch on the system as the particular component that generated the signal.

7. The method of claim **3**, further comprising the step of:

providing a register for storing the data that identify the particular component, the register having bits, each bit corresponding to one of the components in the system that could have generated the wake up signal.

8. The method of claim **7**, further comprising the step of:

setting the bit corresponding to the particular component to a first value when the particular component generates the signal, otherwise setting that bit to a second value.

9. An computer system for securely writing data to a device in a system over a network, comprising:

a plurality of components capable of issuing a wake-up signal that wakes up the computer system, the components including a network interface coupled to the network for issuing the wake-up signal in response to receiving a valid wake-up packet from over the network, one of the components issuing the wake-up signal;

data storage coupled to the network interface for storing data indicating whether the network interface has issued the wake-up signal;

a processor coupled to the data storage for determining from the stored data whether the network interface issued the wake-up signal; and

circuitry, coupled to the processor and the device, allowing data to be written to the device if the processor determines from the stored data that the network interface issued the signal, otherwise prohibiting data to be written to the device.

10. The computer system of claim **9**, further comprising:

a register for storing the data that indicate whether the network interface has issued the wake-up signal.

11. The computer system of claim **10**, wherein the register has a plurality of bits, each bit corresponding to one of the components in the system that can issue the wake-up signal.

12. The computer system of claim **10**, wherein one of the components is a power switch that issues the wake-up signal when a user locally turns the power switch on, and wherein the circuitry prohibits data from being written to the device when the power switch issues the wake-up signal.

* * * * *