Exhibit C-1

Invalidity of U.S. Patent No. 11,032,111 (the "'111 Patent") in View of
U.S. Patent No. 10,148,414 to Lugthart *et al.*

U.S. Patent No. 10,148,414 to Lugthart *et al.* (Lugthart '414) was filed on June 30, 2017, was published October 19, 2017, and claims domestic priority to at least U.S. Patent Application No. 14,581,979 filed on December 23, 2014. Lugthart '414 qualifies as prior art under 35 U.S.C. § 102(a)(1) (AIA) and 35 U.S.C. § 102(a)(2) (AIA)

The Administrative Law Judge has not yet construed the claims and therefore the meaning of the terms in the claims has yet to be resolved. The support identified here for limitations of the Asserted Claims of the '111 Patent is responsive to Complainant's apparent infringement contentions in its Complaint, which Respondents disagree with. As such, nothing in Respondents' claim charts should be construed as an admission regarding infringement, either literally or under the doctrine of equivalents, or as an admission regarding Respondents' understanding of the proper scope of the Asserted Claims of the '111 Patent.

All cross-references should be understood to include material that is cross-referenced within the cross-reference. Where a particular Figure is cited, the citation should be understood to encompass the caption and description of the Figure as well as any text relating to or describing the Figure. Conversely, where particular text referring to a Figure is cited, the citation should be understood to include the Figure as well. Respondents reserve the right to rely on additional citations or sources of evidence that also may be applicable, or that may become applicable in light of claim construction, changes in Complainant's infringement and/or domestic industry contentions, and/or information obtained during discovery as the Investigation progresses.

To the extent Complainant alleges that Lugthart '414 does not disclose any particular limitation of the Asserted Claims of the '111 Patent, either expressly or inherently, it would have been obvious to a person of ordinary skill in the art as of the priority date of the '111 Patent to modify Lugthart '414 and/or to combine the teachings of Lugthart '414 with other prior art references, including but not limited to the prior art references cited in the Cover Pleading and the relevant section(s) of claim charts for other prior art references for the '111 Patent in a manner that would have rendered the Asserted Claims invalid as obvious.

Because Complainant has yet to identify any limitation of the Asserted Claims of the '111 Patent that it contends is not fully disclosed by Lugthart '414, either alone or in combination with other prior art cited by Respondents, Respondents expressly reserve the right to rebut any such contention, including by identifying additional obviousness combinations, if any such contention is made by Complainant. Respondents further reserve the right to amend or supplement this claim chart at a later date as more fully set forth in the Cover Pleading.

1
CREDO 2008
Amphenol v. Credo
IPR2025-00699

A. INDEPENDENT CLAIM 1

Claim 1	Lugthart '414
1[pre] A SerDes communications method that comprises, in a transceiver:	To the extent the preamble is limiting, Lugthart '414 discloses and/or renders obvious this preamble. Lugthart '414's active cable system provides a "high-speed communication link between first and second electronic devices[.]" *See, e.g.*, Lugthart '414 at 14:10-36. The cable includes conductive lines 111 extending between transceiver assemblies 105a/105b that include "transceivers 107a, 107b, respectively." *See id*. at 14:33-36, 14:50-54, Fig. 2A. Lugthart '414's transceivers "implement a serializer/deserializer (SerDes) function" converting between parallel data paths on the host-side and a serial data path on the line side. *See id*. at 7:9-23. To the extent that this preamble is not disclosed, either explicitly or inherently, by Lugthart '414, this preamble is obvious to a person of ordinary skill in the art based on (1) Lugthart '414 alone, (2) the knowledge of a person of ordinary skill in the art; and/or (3) the teachings with respect to this preamble as detailed in the Cover Pleading and/or other invalidity claim charts. The motivations to modify or combine may come from, for example, the knowledge of the person of ordinary skill themselves, or from known problems and predictable solutions as embodied in these references, examples of which are discussed in the Cover Pleading.
1[a] selecting one of multiple registers to specify initial pre-equalizer coefficient values, each of the multiple registers corresponding to a different channel model;	Lugthart '414 discloses and/or renders obvious this limitation. Lugthart '414 discloses a transceiver that provides "adaptive and configurable signal conditioning features such as… output pre-emphasis." *See, e.g.*, Lugthart '414 at 29:24-29. Lugthart '414 teaches that "pre-emphasis" and "pre-equalization" have the same meaning. Although from the host's perspective DSP 23 is on the "INGRESS/RECEIVE" path, Lugthart's DSP 23—including FIR filters 27a/27b—provides pre-equalization for the signal ("RX DATA") that transceiver 10 transmits to the host transceiver. *See id*. at 9:42-55, Fig. 1A (annotated below).

Claim 1	Lugthart '414
	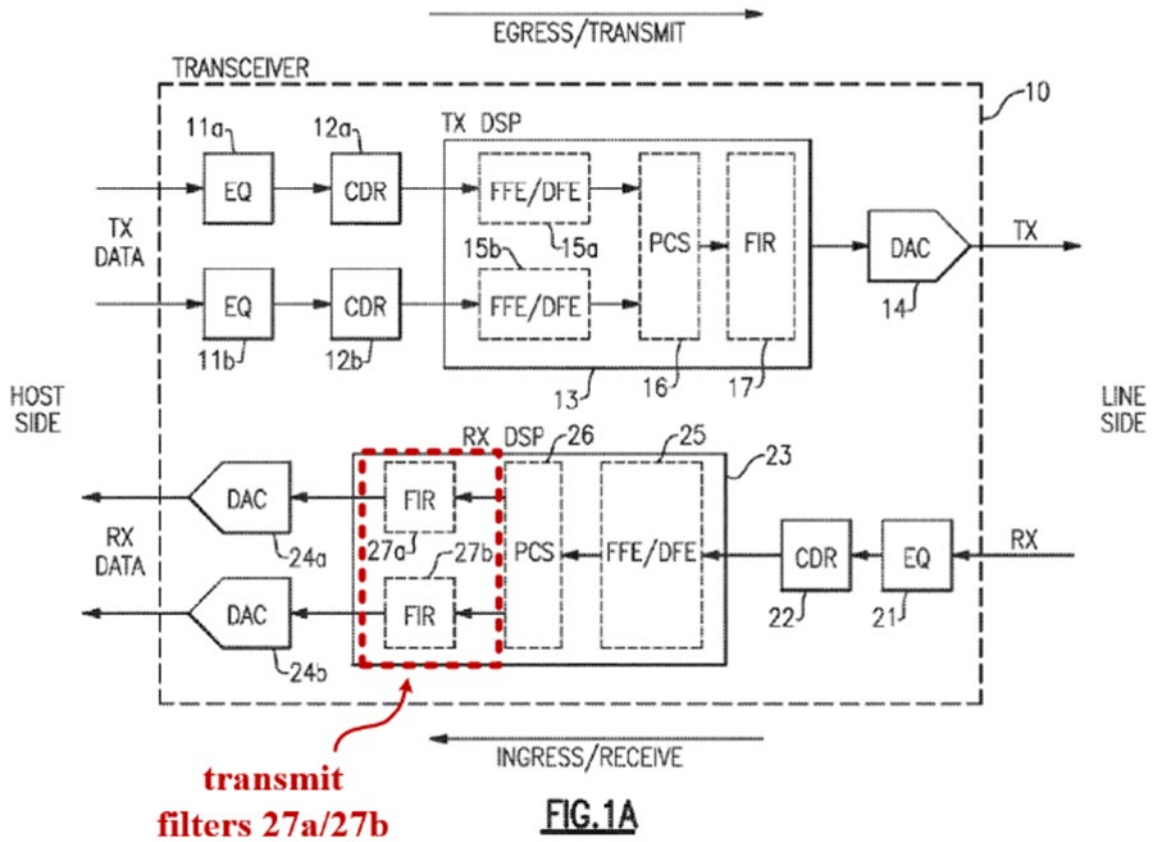 Transmit filters 27a/27b condition the line side signal, which they provide to DACs 24a/24b for transmission to the host side. *See id*. at 23:9-19. Lugthart '414 explicitly identifies "transmission line losses on the host side" between the pluggable module transceiver and the host transceiver. *See id*. at 9:14-19. Lugthart '414 explains that FIR filter 17 in the egress/transmit path "perform[s] emphasis on the signal to compensate for channel losses" (*See id*. at 23:67-24:2) and notes that the "DSP 23 in the ingress

3

Claim 1	Lugthart ’414
	path can include componentry that is similar to the DSP 13 in the egress path.” *See id*. at 24:8-9; *see also id*. at 24:9-35 (explaining differences between DSP 23’s serial-to-parallel conversion and DSP 13’s parallel-to-serial conversion, but noting no difference in signal conditioning by the FIR filters). In Lugthart ’414’s transceiver, equalizer 21 “compensate[s] for transmission line losses on the line side” in the ingress/receive data path (*See id*. at 9:14-16), and Lugthart ’414’s pluggable module transceiver performs “output pre-emphasis.” *See id*. at 29:22-29. Thus, Lugthart ’414 describes FIR filters 27a/27b as performing “output pre-emphasis” to compensate for the transmission losses that Lugthart ’414 describes on the host side between the pluggable module transceiver and the port transceiver. *See id*. at 29:22-29. To the extent that this claim limitation is not disclosed, either explicitly or inherently, by Lugthart ’414, this limitation is obvious to a person of ordinary skill in the art based on (1) Lugthart ’414 alone, (2) the knowledge of a person of ordinary skill in the art; and/or (3) the teachings with respect to this claim limitation as detailed in the Cover Pleading and/or other invalidity claim charts. The motivations to modify or combine may come from, for example, the knowledge of the person of ordinary skill themselves, or from known problems and predictable solutions as embodied in these references, examples of which are discussed in the Cover Pleading.
1[b] updating the initial pre-equalizer coefficient values during a training phase; and	Lugthart ’414 discloses and/or renders obvious this limitation. During a training phase, as taught by Lugthart ’414 at the pluggable module transceiver 107a/107b that includes the registers storing different pre-equalizer coefficients update[es] the initial pre-equalizer coefficients, selected as discussed with claim limitation 1[a], for FIR filters 27a/27b to optimize those coefficients to reduce the error rate. *See, e.g.*, Lugthart ’414 at 9:42-55, 22:19-23, 23:26-28. To the extent that this claim limitation is not disclosed, either explicitly or inherently, by Lugthart ’414, this limitation is obvious to a person of ordinary skill in the art based on (1) Lugthart ’414 alone, (2) the knowledge of a person of ordinary skill in the art; and/or (3) the teachings with respect to this claim limitation as detailed in the Cover Pleading and/or other invalidity claim charts. The motivations to modify or combine may come from, for example, the knowledge of the person of ordinary skill themselves, or from known problems and predictable solutions as embodied in these references, examples of which are discussed in the Cover Pleading.

Exhibit C-1

Claim 1	Lugthart ’414
1[c] using the updated pre-equalizer coefficient values to convey a transmit data stream.	Lugthart ’414 discloses and/or renders obvious this limitation. Lugthart ’414’s transceiver 107a/107b us[es] the updated pre-equalizer coefficient values generated during the training phase by applying them to transmit FIR filters 27a/27b in DSP 23 to process the “INGRESS/RECEIVE” data stream (transmit data stream) in Lugthart ’414 Fig. 1A. Lugthart ’414 names data streams from the adjacent host’s perspective, but this signal naming convention is irrelevant to filter 27a/27b’s function, which is to condition signals for transmission over the C2M channel to the host transceiver. FIR filters 27a/27b outputs are connected to DACs 24a/24b, respectively, that “include outputs that generate host side receive data (RX DATA)” which is a transmit data stream that is transmitted to the host device. *See, e.g.*, Lugthart ’414 at 8:32-36. To the extent that this claim limitation is not disclosed, either explicitly or inherently, by Lugthart ’414, this limitation is obvious to a person of ordinary skill in the art based on (1) Lugthart ’414 alone, (2) the knowledge of a person of ordinary skill in the art; and/or (3) the teachings with respect to this claim limitation as detailed in the Cover Pleading and/or other invalidity claim charts. The motivations to modify or combine may come from, for example, the knowledge of the person of ordinary skill themselves, or from known problems and predictable solutions as embodied in these references, examples of which are discussed in the Cover Pleading.

B. DEPENDENT CLAIM 2

Claim 2	Lugthart '414
2. The method of claim 1, wherein at least some of the different channel models are for chip-to-module (C2M) channels with different insertion loss and package loss characteristics.	Lugthart '414 discloses and/or renders obvious this limitation. A "chip-to-module (C2M) channel" is a channel between a transceiver on a host IC and the transceiver on a pluggable module connected to a port on the device. See, e.g., '111 Patent at 5:24-30, 11:26-31 (describing the module side of a "C2M link" as implemented by a "pluggable module" such as a "QSFP" interface "that is inserted into a port in a host such as a switch or a router"); *see also* Optical Internetworking Forum, "OIF Next Generation Interconnect Framework," OIF-FD-Client-400G/1T-01.0 (2013), 15 ("Interconnect Applications… Chip-to-module"), 17 ("3.4 Chip to module"), Fig. 8 ("Chip to Module Interconnect Application Space," annotated below). 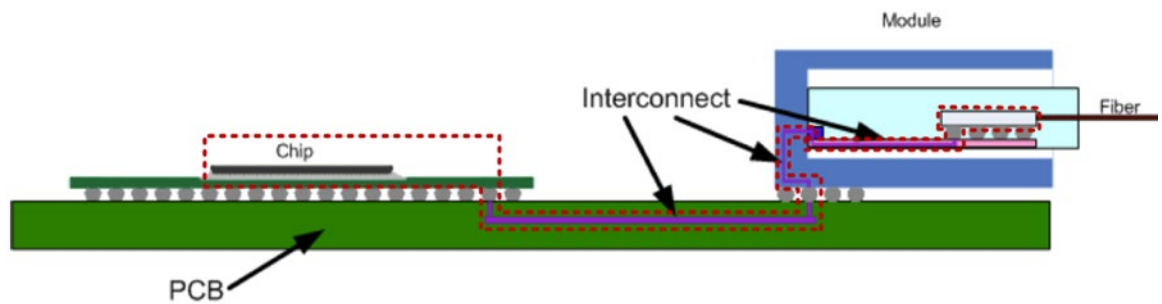 **Figure 8 Chip to Module Interconnect Application Space** Lugthart '414 teaches an active cable having a pluggable module that, when coupled to a host device, forms a chip-to-module channel between a host transceiver and the pluggable module transceiver. Lugthart '414 also teaches an active cable system includes a "QSFP interface" which is a "pluggable module" and includes transceivers 107a/107b. *See, e.g.*, Lugthart '414 at 15:31-58 (active cable including transceivers 107a/107b in a host's QSFP port-compatible connector), 50:34-59 (describing exemplary active cable comprising transceivers in QSFP interface), 51:64-52:5 (referring to QSFP interface as a "pluggable module"), Fig. 17A.

Claim 2	Lugthart ’414
	The transceivers 107a/107b of Lugthart ’414 can send electrical signals to “one or more additional transceivers… on the host side” (host transceivers) in the electronic devices 101a/101b. *See, e.g.*, Lugthart ’414 at 10:21-26. These signals can be sent “over high loss PCB channels” connecting the pluggable module transceivers 107a/107b and the host transceivers. *See id*. at 29:42-45. Lugthart ’414 explains that “transceivers can be a monolithic device including analog and digital components included in a single integrated circuit (IC), for example, or may instead include multiple integrated circuits.” *See id*. at 15:39-42. Lugthart ’414 described a host transceiver in electronic device 101a/101b as comprising an IC, thus providing the “chip” for a C2M channel. Regardless, Lugthart ’414 teaches that a conventional way to implement the host transceiver was with an IC mounted on the PCB in the host. Thus, in Lugthart ’414 at the “high loss PCB channel[]” that connects the host transceiver (an integrated circuit or “chip”) to the pluggable module transceiver 107a/107b is a “chip-to-module (C2M) channel.” *See id*. at 10:21-26, 15:31-58, 29:42-45, 50:34-59, 51:64-52:5. To the extent “chip-to-module (C2M) channel” means a chip-to-module channel conforming to the IEEE 802.3-2015 Ethernet standard referenced throughout the ’111 Patent, Lugthart ’414 still discloses claim 2 because Lugthart ’414 describes, and conventional implementation supported, Ethernet communications over the PCB channel between the pluggable module transceiver 107a/107b and the host transceiver. *See id*. at 48:16-20; *see also* id. 16:31-33 (“conducting lines 111” can “reside on a PCB or other substrate”). “[I]nsertion loss” refers to losses in signal strength from propagation through a channel, such as through the pluggable module’s port connection. “Package loss” refers to loss attributed to the particular “integrated circuit package” or “PCB layout” over which the signals travel. See, e.g., ’111 Patent at 11:55-60. While Lugthart ’414 does not expressly say that the “high loss PCB channels” on the host side have “insertion loss” and “package loss,” Lugthart ’414 teaches that this was so because it was well-known that there is package loss for signals exiting the pluggable module’s transceiver and entering the host device’s transceiver, as well as insertion loss as the signal propagates over the printed circuit board (PCB) between those transceivers. *See, e.g.*, Lugthart ’414 at 29:23-39 (describing the use of signal conditioning features (e.g., “output pre-emphasis”) to compensate for channel “insertion loss”), 15:25-42 (disclosing that the

Claim 2	Lugthart ’414
	transceiver is “enclosed in a packaging” comprising “materials suitable for electronic and computer interfaces”). Thus, Lugthart ’414 teaches that the host-side “loss” that Lugthart ’414 describes compensating for using pre-equalization performed by the pluggable module transceiver includes both insertion loss and packaging loss. *See, e.g.*, Lugthart ’414 at 29:23-45. To the extent that this claim is not disclosed, either explicitly or inherently, by Lugthart ’414, this limitation is obvious to a person of ordinary skill in the art based on (1) Lugthart ’414 alone, (2) the knowledge of a person of ordinary skill in the art; and/or (3) the teachings with respect to this claim as detailed in the Cover Pleading and/or other invalidity claim charts. The motivations to modify or combine may come from, for example, the knowledge of the person of ordinary skill themselves, or from known problems and predictable solutions as embodied in these references, examples of which are discussed in the Cover Pleading.

C. DEPENDENT CLAIM 3

Claim 3	Lugthart '414
3. The method of claim 1, wherein at least some of the different channel models presume different types of receiver equalization.	Lugthart '414 discloses and/or renders obvious this limitation. To the extent that this claim is not disclosed, either explicitly or inherently, by Lugthart '414, this limitation is obvious to a person of ordinary skill in the art based on (1) Lugthart '414 alone, (2) the knowledge of a person of ordinary skill in the art; and/or (3) the teachings with respect to this claim as detailed in the Cover Pleading and/or other invalidity claim charts. The motivations to modify or combine may come from, for example, the knowledge of the person of ordinary skill themselves, or from known problems and predictable solutions as embodied in these references, examples of which are discussed in the Cover Pleading.

D. DEPENDENT CLAIM 4

Claim 4	Lugthart '414
4. The method of claim 1, wherein said selecting includes using the initial pre-equalizer coefficient values to determine a performance characteristic for each of the multiple registers.	Lugthart '414 discloses and/or renders obvious this limitation. To the extent that this claim is not disclosed, either explicitly or inherently, by Lugthart '414, this limitation is obvious to a person of ordinary skill in the art based on (1) Lugthart '414 alone, (2) the knowledge of a person of ordinary skill in the art; and/or (3) the teachings with respect to this claim as detailed in the Cover Pleading and/or other invalidity claim charts. The motivations to modify or combine may come from, for example, the knowledge of the person of ordinary skill themselves, or from known problems and predictable solutions as embodied in these references, examples of which are discussed in the Cover Pleading.

E. DEPENDENT CLAIM 5

Claim 5	Lugthart '414
5. The method of claim 4, wherein the performance characteristic is an error signal energy.	Lugthart '414 discloses and/or renders obvious this limitation. To the extent that this claim is not disclosed, either explicitly or inherently, by Lugthart '414, this limitation is obvious to a person of ordinary skill in the art based on (1) Lugthart '414 alone, (2) the knowledge of a person of ordinary skill in the art; and/or (3) the teachings with respect to this claim as detailed in the Cover Pleading and/or other invalidity claim charts. The motivations to modify or combine may come from, for example, the knowledge of the person of ordinary skill themselves, or from known problems and predictable solutions as embodied in these references, examples of which are discussed in the Cover Pleading.

F. DEPENDENT CLAIM 6

Claim 6	Lugthart '414
6. The method of claim 4, wherein the performance characteristic is a bit error rate.	Lugthart '414 discloses and/or renders obvious this limitation. To the extent that this claim is not disclosed, either explicitly or inherently, by Lugthart '414, this limitation is obvious to a person of ordinary skill in the art based on (1) Lugthart '414 alone, (2) the knowledge of a person of ordinary skill in the art; and/or (3) the teachings with respect to this claim as detailed in the Cover Pleading and/or other invalidity claim charts. The motivations to modify or combine may come from, for example, the knowledge of the person of ordinary skill themselves, or from known problems and predictable solutions as embodied in these references, examples of which are discussed in the Cover Pleading.

G. DEPENDENT CLAIM 7

Claim 7	Lugthart '414
7. The method of claim 4, further comprising updating the selected register with the updated pre-equalizer coefficient values.	Lugthart '414 discloses and/or renders obvious this limitation. Lugthart '414 teaches and implements a training phase, during which the pluggable module transceiver 107a/107b updates the pre-equalizer coefficient values for FIR filters 27a/27b from the selected register to optimize those coefficient values to reduce the error rate. See, e.g., Lugthart '414 at 9:42-55, 22:19-23, 23:26-28. To the extent that this claim is not disclosed, either explicitly or inherently, by Lugthart '414, this limitation is obvious to a person of ordinary skill in the art based on (1) Lugthart '414 alone, (2) the knowledge of a person of ordinary skill in the art; and/or (3) the teachings with respect to this claim as detailed in the Cover Pleading and/or other invalidity claim charts. The motivations to modify or combine may come from, for example, the knowledge of the person of ordinary skill themselves, or from known problems and predictable solutions as embodied in these references, examples of which are discussed in the Cover Pleading.

H. INDEPENDENT CLAIM 8

Claim 8	Lugthart '414
8[pre] A chip-to-module communications link that comprises a port connector coupling a port transceiver to a pluggable module transceiver, the pluggable module transceiver including:	To the extent the preamble is limiting, Lugthart '414 discloses and/or renders obvious this preamble. Lugthart '414's active cable system provides a "high-speed communication link between first and second electronic devices[.]" *See, e.g.*, Lugthart '414 at 14:10-36. The cable includes conductive lines 111 extending between transceiver assemblies 105a/105b that include "transceivers 107a, 107b, respectively." *See id*. at 14:33-36, 14:50-54, Fig. 2A. Lugthart '414's transceivers "implement a serializer/deserializer (SerDes) function" converting between parallel data paths on the host-side and a serial data path on the line side. *See id*. at 7:9-23. The '111 Patent uses "chip-to-module communications link" consistent with its known meaning, e.g., a communications link between a host IC and a pluggable module transceiver that can be plugged into a port on the host. Optical Internetworking Forum, "OIF Next Generation Interconnect Framework," OIF-FD-Client-400G/1T-01.0 (2013), 15 ("Interconnect Applications… Chip-to-module"), 17 ("3.4 Chip to module"), Fig. 8 ("Chip to Module Interconnect Application Space," annotated below). 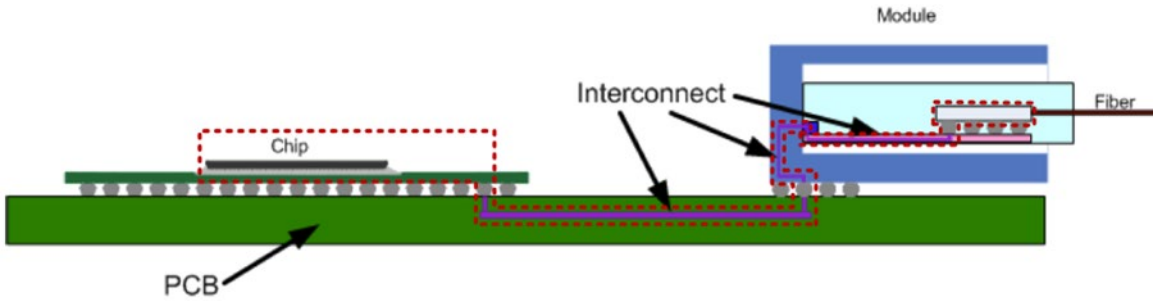 **Figure 8 Chip to Module Interconnect Application Space** Lugthart '414's communication link between a host transceiver in Lugthart '414's electronic device 101a/101b and transceiver 107a/107b in the cable's pluggable module (Lugthart '414's modified

Claim 8	Lugthart '414
	transceiver assembly 105a/105b), respectively, is a "chip-to-module communications link." See, e.g., claim 2 ("C2M channel") 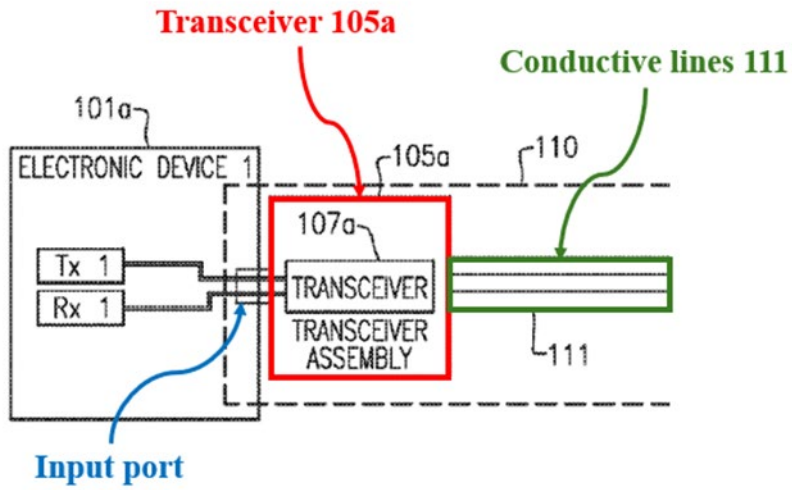 Transceiver assembly 105a is a pluggable module (red) with a port that is releasably coupled to an "input port" (blue) (i.e., port connector) on the first electronic device 101a. *See, e.g.*, Lugthart '414 at 14:36-43, 15:49-59 (describing an "input port" using existing standards, e.g., SFP/QSFP), Fig. 2A (annotated detail above). The host device has a transceiver. *See id*. at 10:21-26 (transceiver 105a produces electrical signals that "can be provided to one or more additional transceivers electrically coupled to the transceiver… on the host side"). The host transceiver is a port transceiver because a port connector couples it to the pluggable module transceiver. *See, e.g.*, '111 Patent at 1:50-51 ("a port connector couples a port transceiver to a pluggable module transceiver"). Transceiver 107a is a pluggable module transceiver because it is in transceiver assembly 105a, which is a pluggable module releasably pluggable into the host device port. *See, e.g.*, Lugthart '414 at 4:12-32, 15:49-59, 52:1-5, Fig. 2A.

Claim 8	Lugthart ’414
	An ordinarily skilled artisan would have had reasons to implement as taught by Lugthart ’414 with a reasonable expectation of success so that it complied with the Ethernet standard because Lugthart ’414 describes supporting Ethernet, and such standards-compliant implementation was conventional. *See, e.g.*, Lugthart ’414 at 48:16-20, 53:31-39. This obvious implementation would have met the Ethernet standard’s description of a chip-to-module communication link comprising a port connector coupling a port transceiver to a pluggable module transceiver. *See, e.g.*, IEEE 802.3bs-2017, 323-330 (Annex 120C), 350-372 (Annex 120E), 350 (“The chip-to-module interface is defined using a specification… that is similar to that used for CEI-56G-VSR-PAM defined in OIF-CEI-04.0”); *see also* OIF-FD-Client-400G/1T-01.0 (2013) 334, Fig. 16-15 (below, showing a “Connector” receiving a pluggable module). **Figure 16-15. CEI-56G-VSR-PAM4 Channel Reference Model** 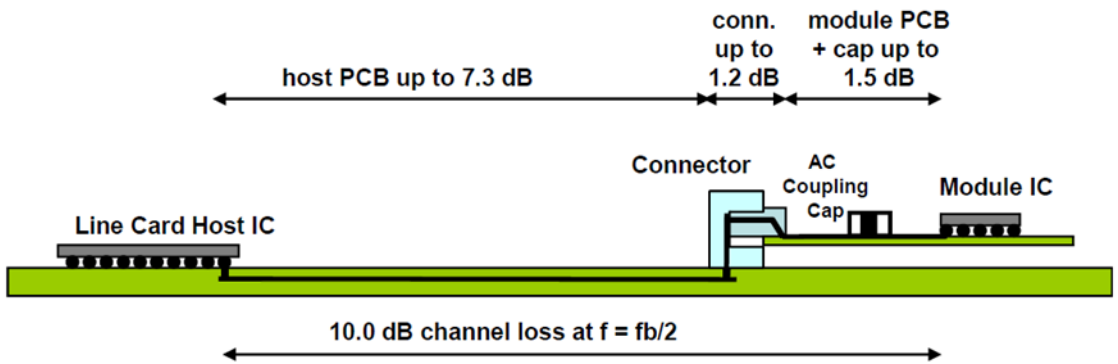 In OIF-CEI-04.0 Figure 16-15, the “Line Card Host IC” is the “port transceiver,” the “module IC” is the “pluggable module transceiver”, and the “Connector” is the “port connector”, meeting the preamble of claim 8. To the extent that this preamble is not disclosed, either explicitly or inherently, by Lugthart ’414, this preamble is obvious to a person of ordinary skill in the art based on (1) Lugthart ’414 alone, (2) the knowledge of a person of ordinary skill in the art; and/or (3) the teachings with respect to this preamble as detailed in the Cover Pleading and/or other invalidity claim charts. The motivations to modify or combine

Claim 8	Lugthart ’414
	may come from, for example, the knowledge of the person of ordinary skill themselves, or from known problems and predictable solutions as embodied in these references, examples of which are discussed in the Cover Pleading.
8[a] one or more transmit filters to each pre-equalize a corresponding serial symbol stream being transmitted to the port transceiver; and	Lugthart ’414 discloses and/or renders obvious this limitation. Lugthart ’414 discloses an active cable system with module transceiver 107a having a “host side” connected to electronic device 101a through the host’s port connector (discussed in claim 8[pre]) and a “line side” connected to the cable’s conductive lines 111. *See, e.g.*, Lugthart ’414 at 8:17-36, Fig. 1A. An “ingress/receive” data path represents data received from conductive lines 111 (“line side”) and transmitted to electronic device 101a (“host side”) after being processed by receive path RX DSP 23. *See, e.g.*, Lugthart ’414 8:17-36, 8:60-9:14, 9:42-55, 10:21-26, 12:4-9, 15:49-54, 8:30-34 (receive path DSP 23’s outputs are electrically coupled to DACs 24a/24b which “include outputs that generate host side receive data (RX DATA)”), Fig. 1A (annotated below), Fig. 2A.

Claim 8	Lugthart '414
	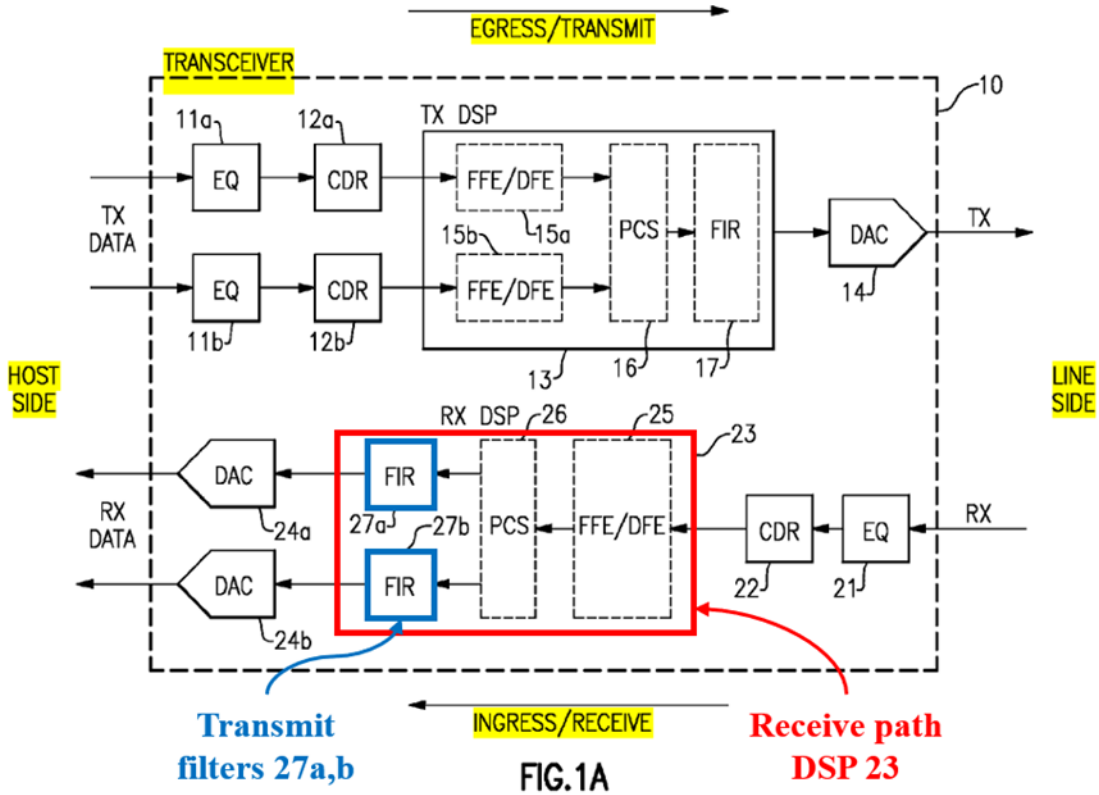 Receive path DSP 23 includes FIR filters 27a/27b. *See, e.g.*, Lugthart '414 at 9:42-55, Fig. 1A (transceiver 107a detail, annotated above). FIR filters 27a/27b are transmit filters because they process data to be transmitted to the host transceiver, including providing pre-equalization. *See, e.g.*, Lugthart '414 at 23:26-28, 23:67-24:2. The host transceiver is a "port transceiver" as discussed supra §VI.E.8.a ([8][pre]). Lugthart '414's FIR filters 27a/27b each pre-equalize[s] a corresponding serial symbol stream being transmitted to a port transceiver. Lugthart '414's transceivers "implement a serializer/deserializer

Claim 8	Lugthart '414
	(SerDes) function" converting between multiple signals on the host side and a single signal on the line side. *See, e.g.*, Lugthart '414 at 7:9-23; id., 24:22-25 (RX DSP 23's PCS block 26 "de-multiplex[es]" a single line-side signal into multiple signals transmitted to the host), Fig. 1A (annotated below). 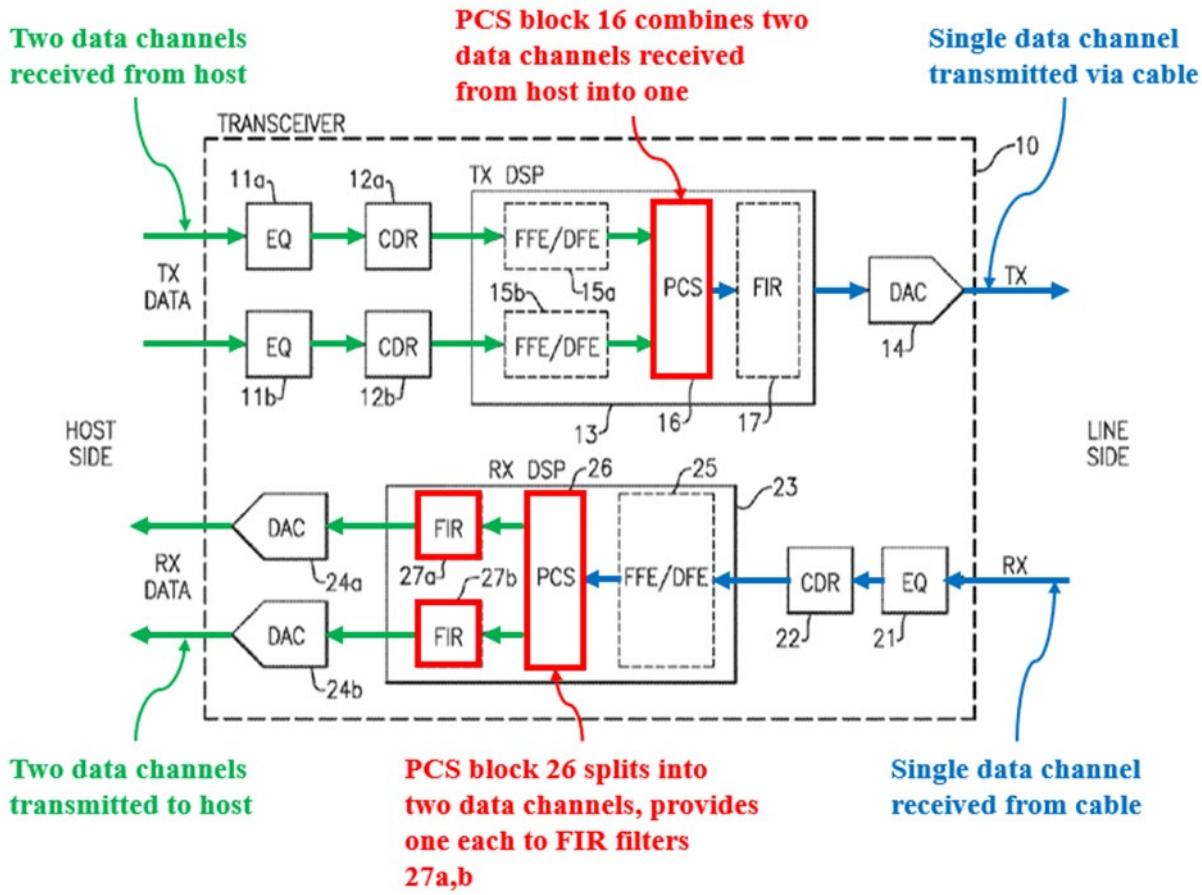

Claim 8	Lugthart '414
	An ordinarily skilled artisan understood that each signal transmitted to the host is a "serial symbol stream" as claimed. "Symbol" was a well-known term for a portion of a waveform or a signal state that represents a unit of data. *See, e.g.*, Lugthart '414 at 31:41-48. Lugthart '414 notes that "intersymbol interference (ISI)" is "a form of signal distortion in which a symbol in a digital data stream interferes with subsequent symbols." *See id*. at 6:46-53. A symbol interfering with "subsequent symbols" transmitted over a data channel confirms that the symbols reside in a serial symbol stream are transmitted one after another. To the extent that this claim limitation is not disclosed, either explicitly or inherently, by Lugthart '414, this limitation is obvious to a person of ordinary skill in the art based on (1) Lugthart '414 alone, (2) the knowledge of a person of ordinary skill in the art; and/or (3) the teachings with respect to this claim limitation as detailed in the Cover Pleading and/or other invalidity claim charts. The motivations to modify or combine may come from, for example, the knowledge of the person of ordinary skill themselves, or from known problems and predictable solutions as embodied in these references, examples of which are discussed in the Cover Pleading.
8[b] a controller having multiple registers, each of the multiple registers containing a set of initial coefficient values corresponding to a different channel model,	Lugthart '414 discloses and/or renders obvious this limitation. Lugthart '414 discloses initial coefficient values for FIR filters 27a/27b (*i.e.*, transmit filters) for use in an adaptive pre-equalization training process from among the registers. See, e.g., Lugthart '414 at 9:42-55, 23:67-24:2. To the extent that this claim limitation is not disclosed, either explicitly or inherently, by Lugthart '414, this limitation is obvious to a person of ordinary skill in the art based on (1) Lugthart '414 alone, (2) the knowledge of a person of ordinary skill in the art; and/or (3) the teachings with respect to this claim limitation as detailed in the Cover Pleading and/or other invalidity claim charts. The motivations to modify or combine may come from, for example, the knowledge of the person of ordinary skill themselves, or from known problems and predictable solutions as embodied in these references, examples of which are discussed in the Cover Pleading.

Exhibit C-1

Claim 8	Lugthart ’414
8[c] the controller using one of the registers to set initial coefficient values for the one or more transmit filters.	Lugthart ’414 discloses and/or renders obvious this limitation. To the extent that this claim limitation is not disclosed, either explicitly or inherently, by Lugthart ’414, this limitation is obvious to a person of ordinary skill in the art based on (1) Lugthart ’414 alone, (2) the knowledge of a person of ordinary skill in the art; and/or (3) the teachings with respect to this claim limitation as detailed in the Cover Pleading and/or other invalidity claim charts. The motivations to modify or combine may come from, for example, the knowledge of the person of ordinary skill themselves, or from known problems and predictable solutions as embodied in these references, examples of which are discussed in the Cover Pleading.

I. DEPENDENT CLAIM 9

Claim 9	Lugthart '414
9. The communications link of claim 8, wherein at least some of the different channel models are for chip-to-module (C2M) channels with different insertion loss and package loss characteristics.	Lugthart '414 discloses and/or renders obvious this limitation. Lugthart '414 discloses for claim limitation 9 for the same reasons that Lugthart '414 discloses for claim 2. *See, e.g.*, claim 2. To the extent that this claim is not disclosed, either explicitly or inherently, by Lugthart '414, this limitation is obvious to a person of ordinary skill in the art based on (1) Lugthart '414 alone, (2) the knowledge of a person of ordinary skill in the art; and/or (3) the teachings with respect to this claim as detailed in the Cover Pleading and/or other invalidity claim charts. The motivations to modify or combine may come from, for example, the knowledge of the person of ordinary skill themselves, or from known problems and predictable solutions as embodied in these references, examples of which are discussed in the Cover Pleading.

J. DEPENDENT CLAIM 10

Claim 10	Lugthart '414
10. The communications link of claim 8, wherein at least some of the different channel models presume different types of receiver equalization.	Lugthart '414 discloses and/or renders obvious this limitation. Lugthart '414 discloses for claim limitation 10 for the same reasons that Lugthart '414 discloses for claim 3. *See, e.g.*, claim 3. To the extent that this claim is not disclosed, either explicitly or inherently, by Lugthart '414, this limitation is obvious to a person of ordinary skill in the art based on (1) Lugthart '414 alone, (2) the knowledge of a person of ordinary skill in the art; and/or (3) the teachings with respect to this claim as detailed in the Cover Pleading and/or other invalidity claim charts. The motivations to modify or combine may come from, for example, the knowledge of the person of ordinary skill themselves, or from known problems and predictable solutions as embodied in these references, examples of which are discussed in the Cover Pleading.

K. INDEPENDENT CLAIM 11

Claim 11	Lugthart '414
11[pre] A chip-to-module communications link that comprises a port connector coupling a port transceiver to a pluggable module transceiver, the pluggable module transceiver including:	To the extent the preamble is limiting, Lugthart '414 discloses and/or renders obvious this preamble. Lugthart '414 discloses the preamble of claim 11 for the same reasons that Lugthart '414 discloses the preamble of claim 8. *See, e.g.*, claim 8[pre]. To the extent that this preamble is not disclosed, either explicitly or inherently, by Lugthart '414, this preamble is obvious to a person of ordinary skill in the art based on (1) Lugthart '414 alone, (2) the knowledge of a person of ordinary skill in the art; and/or (3) the teachings with respect to this preamble as detailed in the Cover Pleading and/or other invalidity claim charts. The motivations to modify or combine may come from, for example, the knowledge of the person of ordinary skill themselves, or from known problems and predictable solutions as embodied in these references, examples of which are discussed in the Cover Pleading.
11[a] one or more transmit filters to each pre-equalize a corresponding serial symbol stream being transmitted to the port transceiver; and	Lugthart '414 discloses and/or renders obvious this limitation. Lugthart '414 discloses the claim limitation 11[a] for the same reasons that Lugthart '414 discloses for claim limitation 8[a]. *See, e.g.*, claim 8[a]. To the extent that this claim limitation is not disclosed, either explicitly or inherently, by Lugthart '414, this limitation is obvious to a person of ordinary skill in the art based on (1) Lugthart '414 alone, (2) the knowledge of a person of ordinary skill in the art; and/or (3) the teachings with respect to this claim limitation as detailed in the Cover Pleading and/or other invalidity claim charts. The motivations to modify or combine may come from, for example, the knowledge of the person of ordinary skill themselves, or from known problems and predictable solutions as embodied in these references, examples of which are discussed in the Cover Pleading.
11[b] a controller having multiple registers, each of the multiple registers	Lugthart '414 discloses and/or renders obvious this limitation. Lugthart '414 discloses the claim limitation 11[b] for the same reasons that Lugthart '414 discloses for claim limitation 8[b]. *See, e.g.*, claim 8[a].

Claim 11	Lugthart '414
containing a set of initial coefficient values for which the port transceiver determines a performance characteristic,	To the extent that this claim limitation is not disclosed, either explicitly or inherently, by Lugthart '414, this limitation is obvious to a person of ordinary skill in the art based on (1) Lugthart '414 alone, (2) the knowledge of a person of ordinary skill in the art; and/or (3) the teachings with respect to this claim limitation as detailed in the Cover Pleading and/or other invalidity claim charts. The motivations to modify or combine may come from, for example, the knowledge of the person of ordinary skill themselves, or from known problems and predictable solutions as embodied in these references, examples of which are discussed in the Cover Pleading.
11[c] the controller using one of the registers selected by the port transceiver to specify the initial coefficient values for the one or more transmit filters.	Lugthart '414 discloses and/or renders obvious this limitation. To the extent that this claim limitation is not disclosed, either explicitly or inherently, by Lugthart '414, this limitation is obvious to a person of ordinary skill in the art based on (1) Lugthart '414 alone, (2) the knowledge of a person of ordinary skill in the art; and/or (3) the teachings with respect to this claim limitation as detailed in the Cover Pleading and/or other invalidity claim charts. The motivations to modify or combine may come from, for example, the knowledge of the person of ordinary skill themselves, or from known problems and predictable solutions as embodied in these references, examples of which are discussed in the Cover Pleading.

L. DEPENDENT CLAIM 12

Claim 12	Lugthart '414
12. The communications link of claim 11, wherein the performance characteristic is an error signal energy.	Lugthart '414 discloses and/or renders obvious this limitation. Lugthart '414 discloses for claim limitation 12 for the same reasons that Lugthart '414 discloses for claim 5. *See, e.g.*, claim 5. To the extent that this claim is not disclosed, either explicitly or inherently, by Lugthart '414, this limitation is obvious to a person of ordinary skill in the art based on (1) Lugthart '414 alone, (2) the knowledge of a person of ordinary skill in the art; and/or (3) the teachings with respect to this claim as detailed in the Cover Pleading and/or other invalidity claim charts. The motivations to modify or combine may come from, for example, the knowledge of the person of ordinary skill themselves, or from known problems and predictable solutions as embodied in these references, examples of which are discussed in the Cover Pleading.

M. DEPENDENT CLAIM 13

Claim 13	Lugthart '414
13. The communications link of claim 11, wherein the performance characteristic is a bit error rate.	Lugthart '414 discloses and/or renders obvious this limitation. Lugthart '414 discloses for claim limitation 13 for the same reasons that Lugthart '414 discloses for claim 6. *See, e.g.*, claim 3. To the extent that this claim is not disclosed, either explicitly or inherently, by Lugthart '414, this limitation is obvious to a person of ordinary skill in the art based on (1) Lugthart '414 alone, (2) the knowledge of a person of ordinary skill in the art; and/or (3) the teachings with respect to this claim as detailed in the Cover Pleading and/or other invalidity claim charts. The motivations to modify or combine may come from, for example, the knowledge of the person of ordinary skill themselves, or from known problems and predictable solutions as embodied in these references, examples of which are discussed in the Cover Pleading.

N. DEPENDENT CLAIM 14

Claim 14	Lugthart '414
14. The communications link of claim 11, wherein the port transceiver generates updates for the coefficient values of the one or more transmit filters.	Lugthart '414 discloses and/or renders obvious this limitation. To the extent that this claim is not disclosed, either explicitly or inherently, by Lugthart '414, this limitation is obvious to a person of ordinary skill in the art based on (1) Lugthart '414 alone, (2) the knowledge of a person of ordinary skill in the art; and/or (3) the teachings with respect to this claim as detailed in the Cover Pleading and/or other invalidity claim charts. The motivations to modify or combine may come from, for example, the knowledge of the person of ordinary skill themselves, or from known problems and predictable solutions as embodied in these references, examples of which are discussed in the Cover Pleading.

O. DEPENDENT CLAIM 15

Claim 15	Lugthart '414
15. The communications link of claim 14, wherein the controller saves updated coefficient values in one of the registers.	Lugthart '414 discloses and/or renders obvious this limitation. To the extent that this claim is not disclosed, either explicitly or inherently, by Lugthart '414, this limitation is obvious to a person of ordinary skill in the art based on (1) Lugthart '414 alone, (2) the knowledge of a person of ordinary skill in the art; and/or (3) the teachings with respect to this claim as detailed in the Cover Pleading and/or other invalidity claim charts. The motivations to modify or combine may come from, for example, the knowledge of the person of ordinary skill themselves, or from known problems and predictable solutions as embodied in these references, examples of which are discussed in the Cover Pleading.

P. INDEPENDENT CLAIM 16

Claim 16	Lugthart '414
16[pre] A pluggable module transceiver including:	To the extent the preamble is limiting, Lugthart '414 discloses and/or renders obvious this preamble. Lugthart '414 discloses the preamble of claim 16 for the same reasons that Lugthart '414 discloses the preamble of claim 8. *See, e.g.*, claim 8[pre]. To the extent that this preamble is not disclosed, either explicitly or inherently, by Lugthart '414, this preamble is obvious to a person of ordinary skill in the art based on (1) Lugthart '414 alone, (2) the knowledge of a person of ordinary skill in the art; and/or (3) the teachings with respect to this preamble as detailed in the Cover Pleading and/or other invalidity claim charts. The motivations to modify or combine may come from, for example, the knowledge of the person of ordinary skill themselves, or from known problems and predictable solutions as embodied in these references, examples of which are discussed in the Cover Pleading.
16[a] one or more transmit filters to each pre-equalize a corresponding serial symbol stream being transmitted to a port transceiver; and	Lugthart '414 discloses and/or renders obvious this limitation. Lugthart '414 discloses the claim limitation 16[a] for the same reasons that Lugthart '414 discloses for claim limitation 8[a]. *See, e.g.*, claim 8[a]. To the extent that this claim limitation is not disclosed, either explicitly or inherently, by Lugthart '414, this limitation is obvious to a person of ordinary skill in the art based on (1) Lugthart '414 alone, (2) the knowledge of a person of ordinary skill in the art; and/or (3) the teachings with respect to this claim limitation as detailed in the Cover Pleading and/or other invalidity claim charts. The motivations to modify or combine may come from, for example, the knowledge of the person of ordinary skill themselves, or from known problems and predictable solutions as embodied in these references, examples of which are discussed in the Cover Pleading.
16[b] a controller having multiple registers, each of the multiple registers	Lugthart '414 discloses and/or renders obvious this limitation. Lugthart '414 discloses the claim limitation 16[b] for the same reasons that Lugthart '414 discloses for claim limitation 8[b]. *See, e.g.*, claim 8[b].

Claim 16	Lugthart '414
containing a set of initial coefficient values corresponding to a different channel model,	To the extent that this claim limitation is not disclosed, either explicitly or inherently, by Lugthart '414, this limitation is obvious to a person of ordinary skill in the art based on (1) Lugthart '414 alone, (2) the knowledge of a person of ordinary skill in the art; and/or (3) the teachings with respect to this claim limitation as detailed in the Cover Pleading and/or other invalidity claim charts. The motivations to modify or combine may come from, for example, the knowledge of the person of ordinary skill themselves, or from known problems and predictable solutions as embodied in these references, examples of which are discussed in the Cover Pleading.
16[c] the controller using one of the registers to set initial coefficient values for the one or more transmit filters.	Lugthart '414 discloses and/or renders obvious this limitation. Lugthart '414 discloses the claim limitation 16[c] for the same reasons that Lugthart '414 discloses for claim limitation 8[c]. *See, e.g.*, claim 8[c]. To the extent that this claim limitation is not disclosed, either explicitly or inherently, by Lugthart '414, this limitation is obvious to a person of ordinary skill in the art based on (1) Lugthart '414 alone, (2) the knowledge of a person of ordinary skill in the art; and/or (3) the teachings with respect to this claim limitation as detailed in the Cover Pleading and/or other invalidity claim charts. The motivations to modify or combine may come from, for example, the knowledge of the person of ordinary skill themselves, or from known problems and predictable solutions as embodied in these references, examples of which are discussed in the Cover Pleading.

Q. DEPENDENT CLAIM 17

Claim 17	Lugthart '414
17. The pluggable module transceiver of claim 16, wherein the port transceiver determines a performance characteristic for each register.	Lugthart '414 discloses and/or renders obvious this limitation. Lugthart '414 discloses for claim 17 for the same reasons that Lugthart '414 discloses for claim limitation 11[b]. *See, e.g.*, claim limitation 11[b]. To the extent that this claim is not disclosed, either explicitly or inherently, by Lugthart '414, this limitation is obvious to a person of ordinary skill in the art based on (1) Lugthart '414 alone, (2) the knowledge of a person of ordinary skill in the art; and/or (3) the teachings with respect to this claim as detailed in the Cover Pleading and/or other invalidity claim charts. The motivations to modify or combine may come from, for example, the knowledge of the person of ordinary skill themselves, or from known problems and predictable solutions as embodied in these references, examples of which are discussed in the Cover Pleading.

R. DEPENDENT CLAIM 18

Claim 18	Lugthart '414
18. The pluggable module transceiver of claim 17, wherein the performance characteristic is an error signal energy.	Lugthart '414 discloses and/or renders obvious this limitation. Lugthart '414 discloses for claim 18 for the same reasons that Lugthart '414 discloses for claim 5. *See, e.g.*, claim 5. To the extent that this claim is not disclosed, either explicitly or inherently, by Lugthart '414, this limitation is obvious to a person of ordinary skill in the art based on (1) Lugthart '414 alone, (2) the knowledge of a person of ordinary skill in the art; and/or (3) the teachings with respect to this claim as detailed in the Cover Pleading and/or other invalidity claim charts. The motivations to modify or combine may come from, for example, the knowledge of the person of ordinary skill themselves, or from known problems and predictable solutions as embodied in these references, examples of which are discussed in the Cover Pleading.

S. DEPENDENT CLAIM 19

Claim 19	Lugthart '414
19. The pluggable module transceiver of claim 17, wherein the performance characteristic is a bit error rate.	Lugthart '414 discloses and/or renders obvious this limitation. Lugthart '414 discloses for claim 19 for the same reasons that Lugthart '414 discloses for claim 6. *See, e.g.*, claim 6. To the extent that this claim is not disclosed, either explicitly or inherently, by Lugthart '414, this limitation is obvious to a person of ordinary skill in the art based on (1) Lugthart '414 alone, (2) the knowledge of a person of ordinary skill in the art; and/or (3) the teachings with respect to this claim as detailed in the Cover Pleading and/or other invalidity claim charts. The motivations to modify or combine may come from, for example, the knowledge of the person of ordinary skill themselves, or from known problems and predictable solutions as embodied in these references, examples of which are discussed in the Cover Pleading.