Trials@uspto.gov
571-272-7822

Paper No. 8
Entered: December 15, 2017

Patent Trial and Appeal Board
INFORMATIVE
Designated: 03/21/18
PRECEDENTIAL AS TO § III.C.5, FIRST PARA
Designated: 08/02/19

UNITED STATES PATENT AND TRADEMARK OFFICE

BEFORE THE PATENT TRIAL AND APPEAL BOARD

BECTON, DICKINSON AND COMPANY,
Petitioner,

v.

B. BRAUN MELSUNGEN AG,
Patent Owner.

Case IPR2017-01586
Patent 8,328,762 B2

Before SCOTT A. DANIELS, MICHAEL L. WOODS, and ROBERT L. KINDER, *Administrative Patent Judges.*

DANIELS, *Administrative Patent Judge.*

DECISION
Institution of *Inter Partes* Review
37 C.F.R. § 42.108

I. INTRODUCTION

A. Background

Becton, Dickinson and Company ("Petitioner") filed a Petition requesting *inter partes* review of claims 18, 22, and 25 of U.S. Patent No. 8,328,762 B2 ("the '762 patent"). Paper 3, ("Pet."). B. Braun Melsungen AG ("Patent Owner") filed a Preliminary Response contending that the Petition should be denied as to all challenged claims. Paper 7, ("Prelim. Resp.").

We have jurisdiction under 37 C.F.R. § 42.4(a) and 35 U.S.C. § 314, which provides that an *inter partes* review may not be instituted unless the information presented in the Petition "shows that there is a reasonable likelihood that the petitioner would prevail with respect to at least 1 of the claims challenged in the petition." Having considered the arguments and the evidence presented, for the reasons described below, we institute *an inter partes* review of all the challenged claims.

B. Additional Proceedings

Petitioner represents that the '762 patent is at issue in *B. Braun Melsungen AG et al. v. Becton, Dickinson & Co. et al.*, No. 1:16-cv-00411 (D. Del.). Pet. 1. Petitioner also represents that petitions for *inter partes* review were also filed challenging related patents US. Patent Nos.: 8,337,463; 8,333,735; 8,540,728; 9,149,626; 8,597,249; 8,460,247; and

9,370,641. *Id.* Below is a chart that associates the *inter partes* reviews with each patent:

IPR Number	Patent Number
IPR2017-01583	8,333,735
IPR2017-01584	8,540,728
IPR2017-01585	8,337,463
IPR2017-01586	8,328,762
IPR2017-01587	9,149,626
IPR2017-01588	8,460,247
IPR2017-01589	8,597,249
IPR2017-01590	9,370,641

C. The '762 Patent (Ex. 1001)

The '762 patent, titled "Catheter Insertion Device," purports to prevent "an outflow of blood from the catheter . . . after removal of the hollow needle with [a] needle guard element." Ex. 1001, 1:31–33. Figure 1 of the '762 patent's catheter insertion device is reproduced below:

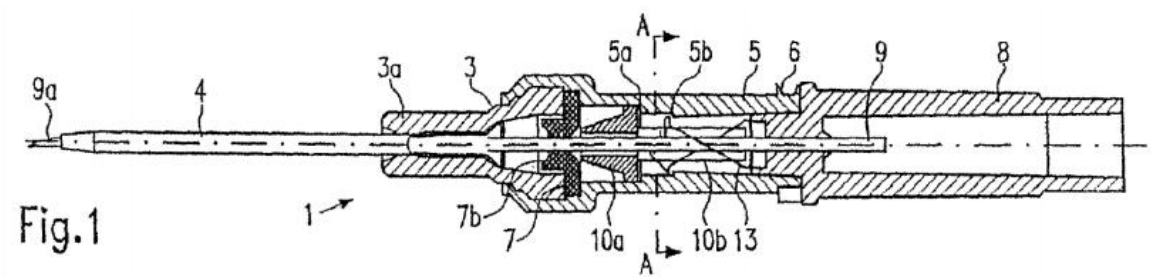

According to the '762 patent, Figure 1 depicts catheter insertion device 1 with catheter 4, needle hub 8, to which hollow needle 9 is fixed and which needle 9 passes through valve disc 7 and extends through catheter 4.

Ex. 1001, 2:8–9, 18–20. Between needle hub 8 and valve disc 7 is valve actuating element 10, which has a truncated cone-shaped section 10a, which serves to open valve disc 7. *Id.* at 2:20–24. Also shown is needle guard element 13 in the form of a spring clip. *Id.* at 2:27–29. Needle guard element 13 serves to cover needle tip 9a upon withdrawal of needle 9 from the catheter hub, thereby "completely protecting and blocking it," as shown in Figure 2. *See id.* at 2:31–39.

To illustrate the removal of needle 9 from catheter hub 2, we reproduce Figure 2, below:

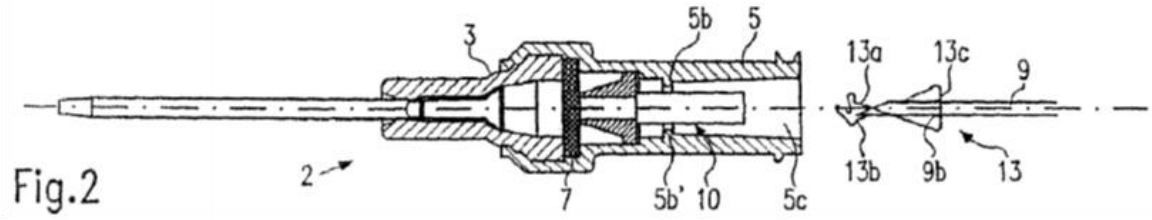

Fig.2

Figure 2 of the '762 patent, above, depicts the catheter insertion device with needle 9 removed from catheter hub 2. Ex. 1001, 1:55–56, 2:31–39. As shown, when needle guard element/spring clip 13 is removed from the catheter hub along with needle 9, the spring clip's spring arms 13a, 13b cover the needle's tip. *Id.* at 2:31–39. Figure 2 depicts also valve disc 7—which is elastic—as closing the through-hole from which needle 9 is removed to prevent blood flow from exiting the catheter. *Id.* at 2:39–42.

D. Illustrative Claim

Of the challenged claims, claim 18 is independent. Each of dependent claims 22 and 25 depend directly from independent claim 18. Claim 18 illustrates the claimed subject matter and is reproduced below:

> 18. A method of manufacturing a catheter insertion device comprising:
>
> forming a catheter hub comprising a body comprising an interior cavity with an opening at a proximal end and attaching a catheter tube thereto;
>
> positioning a valve in sealing communication with the interior cavity of the catheter hub for regulating fluid flow through the interior cavity;
>
> positioning a valve actuating element in mechanical communication with the valve for detecting the valve to permit fluid flow through the interior cavity of the catheter hub;
>
> positioning a needle protective device at least partially inside the interior cavity of the catheter hub such that the needle protective device is in-line with the catheter hub and the valve actuating element;
>
> positioning a needle hub having a needle attached thereto proximally of the catheter hub so that the needle projects through the catheter hub and the catheter tube; and
>
> wherein the valve remains inside the interior cavity of the catheter hub when the needle is removed from the catheter tube and the catheter hub.

Ex. 1001, 6:15–36 (emphasis added).

E. The Alleged Grounds of Unpatentability

Petitioner contends that the challenged claims are unpatentable on the following specific grounds.[1]

[1] Petitioner supports its challenge with the Declaration of Jack Griffis, III, (Ex. 1002), and in its Preliminary Response, Patent Owner relies upon the Declaration of Richard Meyst (Ex. 2001). *See infra*.

References	Basis	Claims Challenged
Woehr,[2] and Tauschinski,[3]	§ 103	18, 22, and 25
Van Heugten[4]	§ 103	18 and 22
Van Heugten and Lynn[5]	§ 103	25
Van Heugten and Tauschinski	§ 103	22

II. CLAIM CONSTRUCTION

A. Legal Standard

"A claim in an unexpired patent that will not expire before a final written decision is issued shall be given its broadest reasonable construction in light of the specification of the patent in which it appears." 37 C.F.R. § 42.100(b). When applying that standard, we interpret the claim language as it would be understood by one of ordinary skill in the art in light of the specification. *In re Suitco Surface, Inc.*, 603 F.3d 1255, 1260 (Fed. Cir. 2010). Under that standard, claim terms are generally given their ordinary and customary meaning as would be understood by one of ordinary skill in the art in the context of the entire disclosure. *See In re Translogic Tech., Inc.*, 504 F.3d 1249, 1257 (Fed. Cir. 2007) ("The ordinary and customary meaning 'is the meaning that the term would have to a person of ordinary skill in the art in question.'"). Only terms which are in controversy need to be construed, and then only to the extent necessary to resolve the

[2] (Ex. 1004) US 6,117,108, issued Sept. 12, 2000.
[3] (Ex. 1005) US 4,387,879, issued June 14, 1983.
[4] (Ex. 1006) US 5,053,014, issued Oct. 1, 1991.
[5] (Ex. 1010) WO 01/12249 A1, pub. Feb. 2, 2001.

controversy. *Vivid Techs., Inc. v. Am. Sci. & Eng'g, Inc.*, 200 F.3d 795, 803 (Fed. Cir. 1999).

B. Needle Protective Device

Independent claim 18 and dependent claim 25 each recite a "needle protective device." Ex. 1001, 6:27–30, 54–57. Petitioner contends the needle protective device invokes 35 U.S.C. § 112 ¶ 6 such that it should be construed as a means-plus-function limitation. Pet. 8–11. Petitioner acknowledges that a presumption exists that the limitation is not in means-plus-function format, yet Petitioner contends that the "use of the word 'device' in the claims does not impart any structure and is tantamount to using the word 'means'" (*id.* at 9 (citing *Williamson v. Citrix Online, LLC*, 792 F.3d 1339, 1350 (Fed. Cir. 2015) (en banc)) and further contends that "the modifier 'needle protective' does not impart any structure to the term 'device'" (*id.* at 10). Petitioner's argument is supported by the declaration of Mr. Griffis, who testifies that "[t]he term 'needle protective device' is not a term used in common parlance or by persons of skill in the pertinent art to designate structure, nor has it achieved recognition as a noun denoting structure." *Id.* (citing Ex. 1002 ¶ 44).

Patent Owner disagrees that the needle protective device limitation should be construed in means-plus-function format. Prelim. Resp. 5–18. Patent Owner contends that "[t]he claim language following 'needle protective device' . . . indicates the term is structural." *Id.* at 17. Patent Owner notes that independent "[c]laim 18 requires certain structural constraints on the needle protective device, such as, that the "needle protective device" be "be positioned 'at least partially inside the interior cavity of the catheter hub such that the needle protective device is in-line

with the catheter hub and the valve actuating element.'" *Id.* Patent Owner points out that the dependent claims recite additional structure, such as "the 'needle protective device' comprise 'a guard section for blocking the needle tip,'" (claim 21), and "the 'needle protective device comprises two arms extending distally of a proximal wall,'" (claim 24). *Id.* (citing Ex. 2001 ¶¶ 60–62; *Inventio AG v. ThyssenKrupp Elevator Am. Corp.*, 649 F.3d 1350, 1356 (Fed. Cir. 2011) (finding sufficient structure when claims "delineate the components that the [device] is connected to, describe how the [device] interacts with those components, and describe the [function] that the [device] performs")).

Based on the record before us, we are not convinced that the needle protective device limitation should be construed as a means-plus-function term. Because the term "means" is not used, there is a presumption that the limitation is not subject to § 112 ¶ 6, and Petitioner has not overcome this presumption. Rather, as pointed out by Patent Owner, we determine that the needle protective device limitation and the claims as a whole recite sufficient structure. *See Williamson, LLC*, 792 F.3d at 1349 (explaining that the presumption is overcome when "the claim term fails to 'recite sufficiently definite structure' or else recites 'function without reciting sufficient structure for performing that function.'"). Further, Dr. Meyst explains how a person of ordinary skill in the art "would recognize that the claimed 'needle protective device' refers to the class of structures included in safety IV catheters that prevent unintended needle-sticks by guarding (i.e., protecting) the needle tip." Ex. 2001 ¶ 52 (citing Ex. 2014, which is cited in the '762 patent).

Based on the record before us, the term "needle protective device" should not be construed under §112 ¶ 6. Instead, we agree with Patent Owner that the term "needle protective device" means a device configured to prevent unintended needle sticks. *See* Prelim. Resp. 18.

III. ANALYSIS

A. Principles of Law

A claim is unpatentable under 35 U.S.C. § 103(a) if "the differences between the subject matter sought to be patented and the prior art are such that the subject matter as a whole would have been obvious at the time the invention was made to a person having ordinary skill in the art to which said subject matter pertains." *KSR Int'l Co. v. Teleflex Inc.*, 550 U.S. 398, 406 (2007). The question of obviousness is resolved on the basis of underlying factual determinations, including (1) the scope and content of the prior art; (2) any differences between the claimed subject matter and the prior art; (3) the level of skill in the art; and (4) objective evidence of nonobviousness, i.e., secondary considerations. *Graham v. John Deere Co.*, 383 U.S. 1, 17–8 (1966).

"In an [*inter partes* review], the petitioner has the burden from the onset to show with particularity why the patent it challenges is unpatentable." *Harmonic Inc. v. Avid Tech., Inc.*, 815 F.3d 1356, 1363 (Fed. Cir. 2016). This burden never shifts to Patent Owner. *Dynamic Drinkware, LLC v. Nat'l Graphics, Inc.*, 800 F.3d 1375, 1378 (Fed. Cir. 2015).

B. Level of Ordinary Skill in the Art

In determining whether an invention would have been obvious at the time it was made, we consider the level of ordinary skill in the pertinent art at the time of the invention. *Graham*, 383 U.S. at 17.

Petitioner relies upon the declaration of Jack Griffis (Ex. 1002) and contends that a person of ordinary skill in the art ("POSITA") would have been either "a medical practitioner with experience using vascular access devices and with training, experience and/or familiarity applying principles of engineering to the design, development, and/or testing of vascular access devices," or "an engineer having at least a bachelor of science degree and with several years of experience in the design, development, and/or testing of vascular access devices and their clinical use; a higher level of education could reduce the number of years of experience required." Pet. 7 (citing Ex. 1002 ¶¶ 28–30).

Patent Owner relies upon the declaration of Richard Meyst (Ex. 2001) and contends that a POSITA would have had "at least an associate's degree in engineering or Physics or the equivalent, and at least five years of experience with IV catheters. Alternatively, more education, such as a Bachelor of Science degree, could reduce the number of years of experience to at least two years of experience." Prelim. Resp. 5 (citing Ex. 2001 ¶¶ 26–28).

Based on our review of the '762 patent, the types of problems and solutions described in the '762 patent and applied prior art, and the testimony of Mr. Griffis and Mr. Meyst, we determine that a POSITA would include a medical practitioner (e.g., a nurse or doctor) having at least some experience with vascular catheter devices, or a person with a technical degree (e.g., associate's degree in engineering or physics) and having at least some experience with vascular catheter devices. Further, the applied prior art reflects the appropriate level of skill at the time of the claimed invention. *See Okajima v. Bourdeau*, 261 F.3d 1350, 1355 (Fed. Cir. 2001).

C. Alleged Obviousness over Woehr (Ex. 1004) and Tauschinski (Ex. 1003)

Petitioner contends that claims 18, 22, and 25 are unpatentable over Woehr and Tauschinski. Pet. 3, 10–40.

1. Woehr (Ex. 1004)

Woehr is a U.S. Patent titled "Spring Clip Safety IV Catheter" and discloses a "catheter in which the needle tip is automatically covered after needle withdrawal to prevent the health-care worker from making accidental contact with the needle tip." Ex. 1004, [54], 1:8–11. Figure 1A illustrating Woehr's catheter is reproduced below:

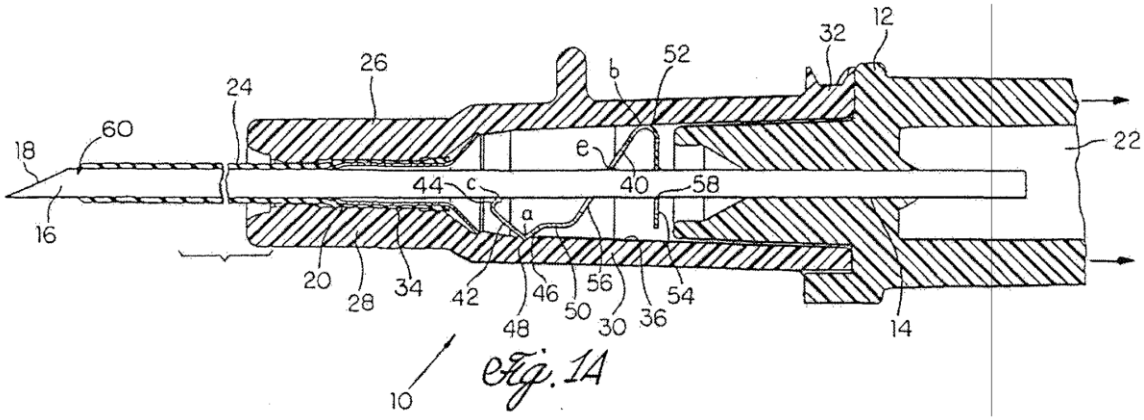

Woehr describes Figure 1A as depicting catheter 10 including needle hub 12, needle 16 with needle tip 18, catheter hub 26, and needle guard 40 in the form of a unitary spring clip. *Id.* at 4:8–28, 50–51. Functionally speaking, as needle 16 is withdrawn from a patient, needle guard 40 "automatically snaps into a retracted position" to block needle tip 18 to prevent accidental contact to the health care practitioner. *Id.* at 4:43–49.

2. Tauschinski (Ex. 1005)

Tauschinski is a U.S. Patent titled "Self-Sealing Connector for Use with Plastic Cannulas and Vessel Catheters" and discloses a connector that

will close automatically when a corresponding catheter is pulled from the connector, thereby "prevent[ing] an emergence of blood or an ingress of air" through the connector. *See* Ex. 1005, [54], 2:7–29. To illustrate the disclosed connector, we reproduce Tauschinski's Figures 2 and 3, below:

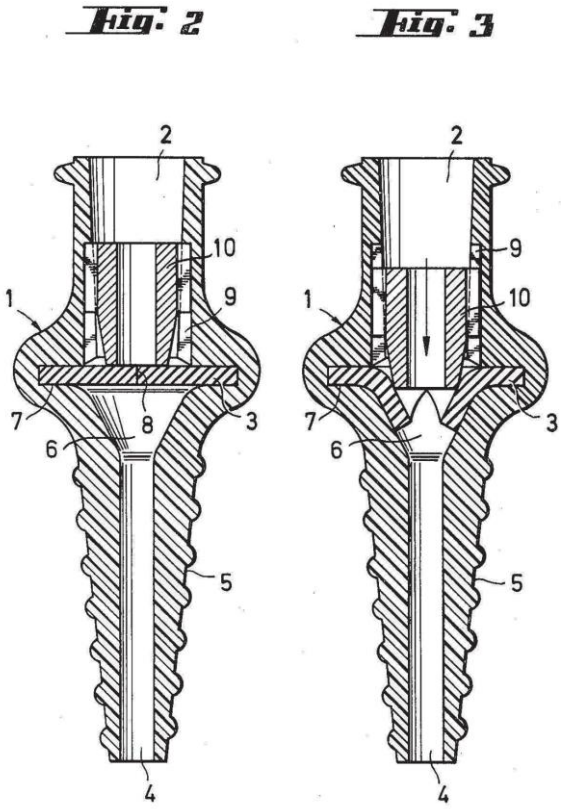

Tauschinski's Figures 2 and 3 depict a connector with a slit sealing disc. *See id.* at 2:62–68. In particular, these figures depict member 10 slidable within hollow-conical portion 2 and disc 3 provided with central slit 8. *See id.* at 3:17–25. Figure 2 depicts disc 3 as closed, with Figure 3 depicting member 10 advanced downward and within slit 8 of disc 3 to open the slit. *See id.* at 3:29–36.

3. *Petitioner's Challenge to Claims 18, 22, and 25*

In challenging the claims, Petitioner submits that Woehr discloses a "catheter insertion device" comprising a "catheter hub," "needle," and

"needle protective device." *See* Pet. 14–15, 21–24 (challenging independent claim 18). To illustrate, Petitioner submits an annotated version of Woehr's Figure 10A, which we reproduce below:

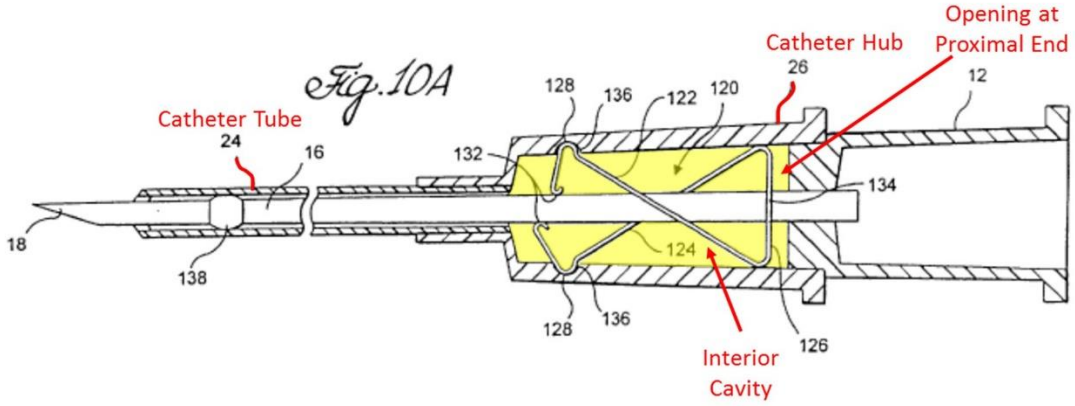

According to Petitioner, and referring to annotated Figure 10A, Woehr discloses the claimed "catheter hub" and "body," "interior cavity," (element 26) including the step of "positioning a needle protection device at least partially inside the interior cavity" (element 120). *Id.*

Addressing the claimed step of "positioning a valve," Petitioner relies on Tauschinski and reasons that it would have been obvious to modify Woehr to include Tauschinski's valve. *See id.* at 15–18 (citations omitted). In relying on Tauschinski, Petitioner submits an annotated version of Tauschinski's Figure 2 (*id.* at 16), which we reproduce below:

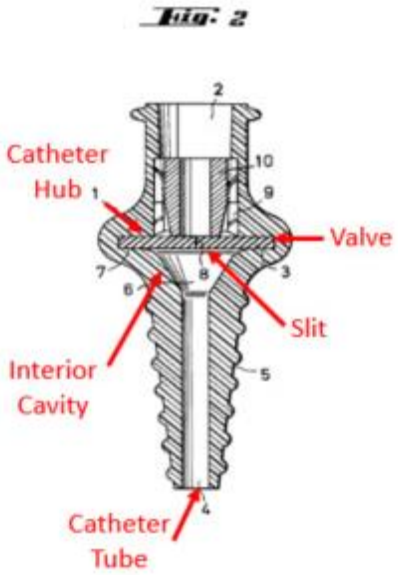

Petitioner asserts that Tauschinski discloses valve 3 with slit 8 configured to obstruct fluid flow through catheter hub 1. *Id.* at 15–16 (citing in-part Ex. 1005, 3:14–19). Petitioner reasons that it would have been obvious to modify Woehr "by adding protective elements, such as a valve to prevent the emergence of blood," as disclosed by Tauschinski. *Id.* at 17 (citing Ex. 1002 ¶¶ 63–68).

To address the claimed step of "positioning a valve actuating element" Petitioner submits annotated versions of Tauschinski's Figures 2 and 3, which we reproduce below:

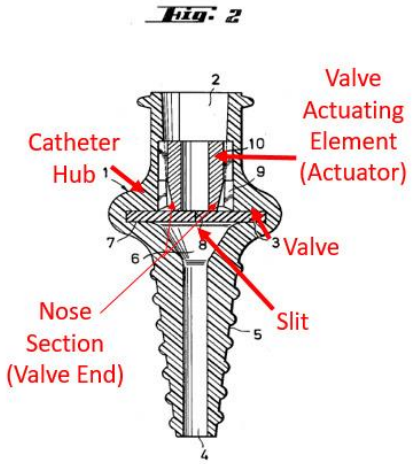

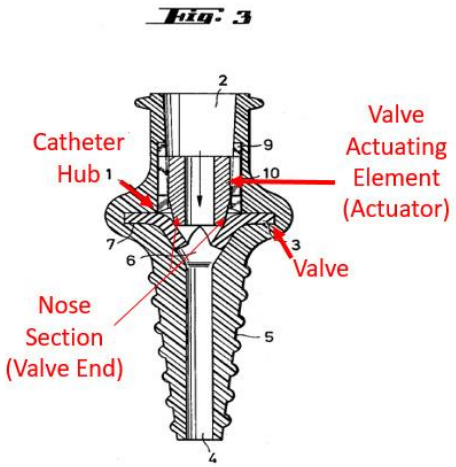

According to Petitioner, and as shown in the above Figures 2 and 3, Tauschinski discloses valve actuating element 10 slidingly disposed in catheter hub 1, and configured to actuate valve 3 to open slit 8. *Id.* at 19 (citing Ex. 1005, 3:20–36).

With respect to "positioning a needle hub," Petitioner argues that Woehr discloses a needle hub 12 and needle attached to the catheter hub so that "the needle projects through the catheter hub and the catheter tube" as called for in claim 18. *Id.* at 24–25. Further, Petitioner contends that with a valve such as disclosed by Tauschinski combined with Woehr's catheter insertion hub, the valve would logically, and predictably, have to remain in the catheter hub after removal of the needle "to prevent fluid flow through the device and out of the proximal end of the catheter." *Id.* at 26–27 (citing Ex. 1002, Griffis Decl. ¶ 82).

In summary, Petitioner reasons that

> A POSA would have found it obvious to improve Woehr '108 by adding protective elements, such as a valve to prevent the emergence of blood, based on the known technique disclosed in Tauschinski to improve a similar catheter insertion device. (Ex.

> 1002, Griffis Decl. ¶¶63–68.) It would have been apparent to a POSA that such a valve could be introduced into the catheter insertion device of Woehr '108 without compromising the function of the instrument, while at the same time, providing a readily implementable solution to the well-recognized problem of mitigating blood outflow from a catheter insertion device. (*Id.*)

Id. at 17.

4. Patent Owner's Argument

§ 325(d)

Patent Owner argues that the Office has already considered Woehr and Tauschinski "in connection with U.S. Patent No. 7,736,339 ('the '339 patent'), the parent from which the '762 patent claims priority."[6] Prelim. Resp. 22. Specifically, during prosecution, Woehr was relied upon as the base reference for disclosing a catheter insertion device in the same manner Woehr is used by Petitioner for this ground. *Id.* at 24. Conceding that the Examiner did not consider the exact same combination of Woehr and Tauschinski proposed here by Petitioner, Patent Owner contends that "[w]hile Woehr-108 and Tauschinski were never considered together, this appears to be because the Office had already considered the combination of Woehr-108 and U.S. Patent No. 5,405,323 to Rogers." *Id.* at 23–24. Patent Owner asserts that Rogers, like Tauschinski, discloses a check valve for a catheter insertion device and that now, Woehr and "Tauschinski adds

[6] The application (U.S. Pat. Appl'n. No. 12/790,630) which became the '762 patent is a continuation of the application (U.S. Pat. Appl'n. No. 10/520,325) which became the '339 patent. Ex. 2005, 75. Applicant entered a Terminal Disclaimer during prosecution of the '630 application to overcome the Examiner's non-statutory double patenting rejection based on the '325 application. *See id.* at 168–170.

nothing beyond what was already considered by the Office."[7] Patent Owner argues that exercise of our discretion under § 325(d) to deny institution of this ground is appropriate here because "Petitioner has failed to present any new evidence or arguments that are substantively different than those already presented by the Office during prosecution of the '339 patent." *Id.* at 33.

5. Analysis

We start with the premise that institution of *inter partes* review is discretionary. *See Harmonic Inc. v. Avid Tech, Inc.*, 815 F.3d 1356, 1367 (Fed. Cir. 2016) ("the PTO is permitted, but never compelled, to institute an IPR proceeding"). In particular, Section 325(d) states that "[i]n determining whether to institute . . . the Director may take into account whether . . . the same or substantially the same prior art or arguments previously were presented to the Office." In evaluating whether to exercise our discretion when the same or substantially the same prior art or arguments previously were presented to the Office under section 325(d), we have weighed some common *non-exclusive* factors, such as: (a) the similarities and material differences between the asserted art and the prior art involved during examination; (b) the cumulative nature of the asserted art and the prior art evaluated during examination; (c) the extent to which the asserted art was evaluated during examination, including whether the prior art was the basis for rejection; (d) the extent of the overlap between the arguments made during examination and the manner in which Petitioner relies on the prior art

[7] The Examiner also considered Tauschinski's valve in combination with a different base reference, Bialecki, U.S. Patent No. 6,652,486 (Ex. 2019). *See* Ex. 2004, 314–325.

or Patent Owner distinguishes the prior art; (e) whether Petitioner has pointed out sufficiently how the Examiner erred in its evaluation of the asserted prior art; and (f) the extent to which additional evidence and facts presented in the Petition warrant reconsideration of the prior art or arguments.[8]

(a) The Similarities and Material Differences Between the Asserted Art and the Prior Art Involved During Examination

Woehr, relied upon by Petitioner as the base reference here, was also the base reference in the Examiner's Woehr/Rogers obviousness rejection during examination. *See* Ex. 2004 121–124. In this proceeding, Petitioner applies Tauschinski, rather than Rogers as the secondary reference.

As shown and discussed above, Tauschinski discloses valve actuating element 10 slidingly disposed in catheter hub 1, and that actuating element 10 slides within the catheter hub to open slit 8 in the valve. Pet. 19 (citing Ex. 1005, 3:20–36). Tauschinski's valve is intended to allow a catheter to be inserted through the valve element 10 and, when the catheter is removed, "the closed connector is intended to prevent an emergence of blood or an ingress of air through the fitting." Ex. 1005, 2:17–19. Rogers similarly "relates to a catheter check valve assembly that prevents unintended back

[8] *See, e.g.*, *Palo Alto Networks v. Finjan*, Case IPR2015-01999, slip op. at 6–8 (PTAB Mar. 29, 2016) (Paper 7) (evaluating the similarities between the asserted art and the references relied on during examination and determining the extent arguments considered during examination); *Dorco Co. v. The Gillette Co.*, Case IPR2017-00500, slip op. at 18–19 (PTAB June 21, 2017) (Paper 7) (considering whether Petitioner identifies errors by the Office or explanation of why the Office should revisit the patentability issues considered by the Examiner, and also considering the overlap of arguments).

flow of body fluids through the catheter when the trocar used in placing the catheter in the body is removed."[9] Ex. 2018, 1:5–9.

Figure 3 from Rogers is reproduced below.

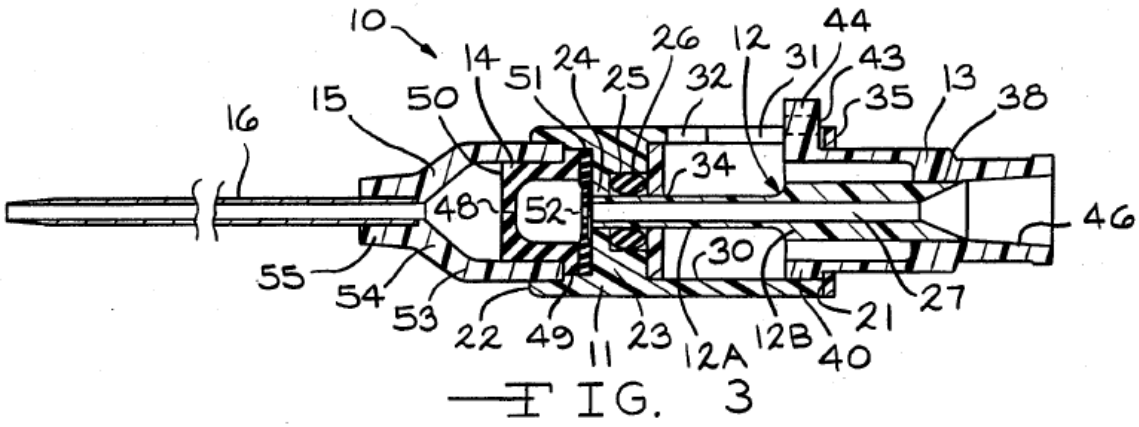

Figure 3 of Rogers illustrates check valve assembly 10 including slit 48 in valve 14, and sliding separator 12, in comparison with Figure 2 from Tauschinski below.

[9] A "trocar" is "a sharp-pointed surgical instrument." MERRIAM-WEBSTER ONLINE DICTIONARY https://www.merriam-webster.com/dictionary/trocar (last visited Nov. 27, 2017).

Fig. 2

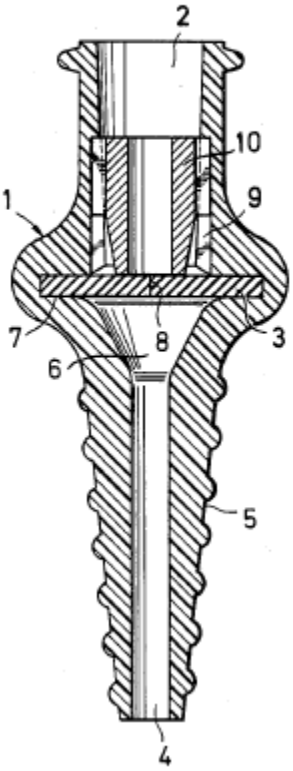

Tauschinski's valve, shown above in Figure 2, includes valve disc 3, slit 8, and slidable actuator 10.

Functionally, Rogers and Tauschinski operate the same way, permitting the insertion of a needle, trocar, or catheter through the valve, and then closing the valve against blood or fluid flow upon removal of the needle or catheter. *Compare* Ex. 1005, 2:7–19, *with* Ex. 2018, 1:5–9. From a structural standpoint, both valves include an actuating element defining a central passage that impacts the valve to open the slit in the valve and then receive and guide a needle through the valve opening. *Compare* Ex. 1005, 3:20–32, *with* Ex. 2018, 4:23–30. The most observable structural difference is that Tauschinski's actuator has a frustoconical-shaped end portion

adjacent the valve disc whereas Rogers' actuator, i.e. separator 12, is cylindrical and has a longer body portion 12A extending to an enlarged body portion 12B. Also, Rogers has a duckbill valve 14 with a different cross-section than a simple disc. Ex. 2018, 2:36–41, 50–53. We cannot reasonably consider such differences "material" because, on one hand these structural differences do not appear to affect in any a meaningful manner, the functioning of the check valve itself, and because Petitioner has not relied on, or substantively addressed, any particular differences between Rogers and Tauschinski valve structure as a basis for unpatentability in the Petition. We therefore give little weight to the fact that Tauschinski is a different secondary reference from Rogers.

(b) The Cumulative Nature of the Asserted Art and the Prior Art Evaluated During Examination

Patent Owner points out that Tauschinski was substantively evaluated by the Examiner, as combined with Bialecki. Prelim. Resp. 15–21, 23–24, 25–27 (citing Ex. 2004, 314–323). During prosecution, Bialecki was relied upon as a base reference disclosing a catheter insertion device, and Tauschinski by the Examiner for

> a check valve [] disposed between the catheter tube and the needle guard element in the catheter hub through which the hollow needle extends in, the ready position and which automatically closes after the removal of the needle, and wherein the check valve remains in the catheter hub when the hollow needle is removed from the catheter hub and the catheter tube.

Ex. 2004, 317. Petitioner has relied on Tauschinski, here in its Petition, in combination with Woehr for the same reasons, stating that Tauschinski teaches a

> valve (e.g., element 3) for deflecting the valve to permit fluid flow through the interior cavity of the catheter hub . . .wherein

> the valve (e.g., element 3) remains inside the interior cavity of the catheter hub when the needle is removed from the catheter tube (e.g., element 4) and the catheter hub (e.g., element 1).

Pet. 18, 25. Considering these explanations, Tauschinski was, therefore, evaluated substantively by the Examiner during prosecution, even if not in combination with Woehr, in the same manner as Petitioner proposes now. Further, the asserted combination of Woehr and Tauschinski are mostly similar and cumulative in the evidentiary context of disclosure when compared to Woehr and Rogers that was evaluated by the Examiner. Indeed, we are also not apprised of any probative differences between the Examiner's obviousness evaluation over Bialecki and Tauschinski, and the current assertion of Woehr and Tauschinski. Also, Petitioner has not articulated any substantive differences between the prior art alone or in combination, nor do we discern any significant disparity based on our review of these references. Petitioner's rearrangement of previously considered prior art presents little, if any, persuasive new evidence of unpatentability. Thus, we understand these references are primarily cumulative in nature.

(c) The Extent to which the Asserted Art was Evaluated During Examination, Including Whether the Prior Art was the Basis for Rejection

As discussed above and pointed out by Patent Owner, Tauschinski and Woehr were substantively considered, albeit in separate obviousness rejections, during prosecution of the parent application from which the '762 patent issued as a continuation. *See* Ex. 2004, 121–124, 314–323; Ex. 2005, 75. However, as we determined above there are no material differences between the structure and function of the check valve elements relied on in Tauschinski and Rogers. And, the asserted prior art for this ground of

unpatentability, i.e. Woehr and Tauschinski, were each considered by the Examiner, albeit in separate obviousness rejections, during prosecution. This is not a case where the prior art was simply listed in an IDS during prosecution. Both Tauschinski and Woehr were included as a basis for, and evaluated with respect to obviousness rejections in the parent application over claims with scope similar to that of the '762 patent, as evidenced by the Terminal Disclaimer filed by Applicant in the prosecution leading to allowance of the '762 patent. *See id.* at 314, 344–352, *see also* Ex. 2005, 170–171.

We are not persuaded on this record that rearranging previously substantively considered prior art, and advancing essentially the same positions raised by the Examiner during prosecution of the parent application, presents persuasive new evidence of unpatentability that was not evaluated previously by the Office.

(d) The Extent of the Overlap Between the Arguments Made During Examination and the Manner in which Petitioner Relies on the Prior Art

We appreciate, as Petitioner argues that, "[t]he Ground presents a new combination of references that has not previously been considered." Pet. 13. However, as discussed above, there is significant overlap in the arguments where Petitioner relies on the combination of Woehr and Tauschinski in the same manner as the Examiner relied on Bialecki and Tauschinski, and Woehr and Rogers. Petitioner has not persuasively explained why the "new combination" leads to any different argument or reasoning then that previously advanced by the Examiner. For example, based on Weohr/Rogers combination, the Examiner reasoned that

> [s]ince the function of catheters is to allow controlled delivery of medicaments or removal of blood from a patient's vessel, it would have been obvious to one of ordinary skill in the art to modify Woehr's cath[e]ter insertion device with a check valve to control intravenous fluid transmission and fluid sampling by closing the fluid pathway after removing the needle.

Ex. 2004, 122. Now, Petitioner argues similarly, based on Weohr/Tauschinski, that

> A POSA would have found it obvious to improve Woehr '108 by adding protective elements, such as a valve to prevent the emergence of blood, based on the known technique disclosed in Tauschinski to improve a similar catheter insertion device.

Pet. 17 (citing Ex. 1002, ¶¶ 63–68). Although not verbatim, we find there is substantial overlap in the arguments where Petitioner argues that the prior art "perform[s] known functions with predictable results and there is no unexpected result on which to base the patentability of the claims." Pet. 13. Based on the Petitioner's explanation as to how and why a person of skill in the art would have combined the references, and here, considering the same and similar references as applied during examination, we find little if any, different argument then that considered previously by the Office. *See Unigene Labs., Inc. v. Apotex, Inc.*, 655 F.3d 1352, 1360 (Fed. Cir. 2011) ("obviousness requires the additional showing that a person of ordinary skill at the time of the invention would have selected and combined those prior art elements in the normal course of research and development to yield the claimed invention.").

(e) *Whether Petitioner has pointed out sufficiently how the Examiner erred in its evaluation of the asserted prior art*

Petitioner has not pointed to error by the Examiner, or for that matter addressed the evidence and argument presented by Patent Owner, during the

underlying prosecution of the '762 patent. Mainly, as discussed below, Petitioner asserts that it presents new testimonial evidence that has not been considered by the Office.

(f) The Extent to which Additional Evidence and Facts Presented in the Petition Warrant Reconsideration of the Prior Art or Arguments.

Petitioner contends that there is additional evidence "including the testimony of Jack Griffis (Ex. 1002) and testimony by Patent Owner's own expert" that was not previously considered by the Office. Pet. 13. For its part, Patent Owner asserts that Mr. Griffis has not substantively reviewed the prosecution history of the '762 patent, and that he "cannot explain, why the new proposed combination of Woehr-108 and Tauschinski is any different than the evidence already of record showing the patentability of the Challenged Claims." Prelim. Resp. 31.

Mr. Griffis's declaration addresses the combination of Woehr and Tauschinski with respect to independent claim 18. Ex. 1002 ¶¶ 61–83. Mr. Griffis testimony, specifically at ¶ 63, explains that "Tauschinski discloses positioning a valve (element 3) in sealing communication with the interior cavity of the catheter hub for regulating fluid flow through the interior cavity." *Id.* ¶ 63 *(citing* Ex. 1005, 2:7–32). Mr. Griffis further testifies that there was a recognized problem in "that during use of an I.V. catheter assembly it is desirable to minimize 'any blood leakage from the assembly so as to reduce the risk of transmitting blood-borne diseases to medical personnel.'" *Id.* ¶ 66 (citing Ex. 1003 1:15–18). And, Mr. Griffis alleges that it would a matter of "routine design" to accommodate a valve and valve actuator in Woehr's device. *Id.* ¶¶ 71, 78.

Although during prosecution the Examiner did not explicitly state that it was "routine design" to combine Woehr and Rogers, we understand implicit in the Examiner's obviousness rejection that a person of ordinary skill in the art would have, and could have, integrated the relevant structures from the references. *See* Ex. 2004, 122 ("Since the function of catheters is to allow controlled delivery of medicaments or removal of blood from a patient's vessel, it would have been obvious to one of ordinary skill in the art to modify Woehr's cath[e]ter insertion device with a check valve to control intravenous fluid transmission and fluid sampling by closing the fluid pathway after removing the needle."). Applicant overcame this rejection explaining in significant detail that

> the tubular portion 12A disclosed by Rogers would act as a divider or wall and never allow the crimp on the needle to engage the guard to then separate the guard form the catheter hub in a used position to cover the needle tip. Accordingly, the proposed modification is defective and will not operate. As such, the two references cannot be combined to reject the claimed device without undue modification.

Ex. 2004, 241. This is just one example, among others, of Applicant's detailed arguments presenting evidence and technical explanations that the structures were not compatible, and would not have been combined by one of skill in the art because such a combination would not have operated or functioned in a manner that would have assured a reasonable expectation of success. Ex. *See id*. at 239–243.

Mr. Griffis arguably provides a reason to combine Woehr and Tauschinski, that is, to prevent blood leakage from Woehr's catheter assembly. Ex. 1002 ¶ 65. What is lacking in Mr. Griffis's testimony, however, are sufficient evidentiary underpinnings supporting the assertion

that the combination is simply "a matter of routine design" for one of ordinary skill in the art. *Id.* ¶ 71. Mr. Griffis's reliance on an entirely different reference, Van Heugten, as evidence to support his contention that one of ordinary skill would have combined Woehr and Tauschinski, is not persuasive because Van Heugten discloses a structurally and functionally different needle protection device from Woehr. *See* Ex. 1002 ¶ 78, *and compare* Ex. 1003, Fig. 2, *with* Ex. 1004, Figs. 10A–B. That a valve can be implemented with a catheter and needle protective device, as disclosed in Van Heugten, does not show persuasively why one of skill in the art would combine Woehr and Tauschinski. The simple fact that Woehr could be modified does not satisfy the requirements for a finding of obviousness. *In re Laskowski*, 871 F.2d 115, 117 (Fed. Cir. 1989); *In re Mills*, 916 F.2d 680,682 (Fed. Cir. 1990).

Mr. Griffis's testimony was not considered by the Examiner, this much is true. However, besides the generalized analogy to Van Heugten, Mr. Griffis's testimony presents little persuasive technical evidence or explanation as to why one of ordinary skill in the art would have combined Tauschinski's valve with Woehr's catheter hub and spring needle protective device. For instance, Mr. Griffis opines that the Woehr/Tauschinski combination "is a predict[t]able variation of known concepts, which, when combined, would yield predictable a result." Ex. 1002 ¶ 76. Neither Petitioner, nor Mr. Griffis, takes the opportunity to explain why Applicant's arguments made during prosecution were in error, or how those arguments would not apply to this asserted ground. Additionally, given the prosecution history, Mr. Griffis's testimony, which explains what each of Woehr and Tauschinski teach, e.g. that Tauschinski's valve actuating element is in-line

with the catheter hub, fails, however, to provide probative evidence and persuasive explanation as to why and how one of skill in the art would have combined Woehr and Tauschinski. Expert testimony that does not disclose the underlying facts or data on which the opinion is based is entitled to little or no weight. 37 C.F.R. § 42.65(a). Mr. Griffis's declaration does not provide persuasive facts, data, or analysis to support the stated opinion. Without such testimony, we are not persuaded that the mere existence of the elements in the prior art warrants reconsideration of the prior art and arguments presented earlier to the Office. *See* Ex. 1002 ¶ 75.

(g) Weighing the Factors.

The same base reference, Woehr, as used in this obviousness ground was relied upon in the same manner during prosecution, and it is combined with a secondary reference, Tauschinski, which was also applied in the same manner by the Examiner as it is here in the Petition. With only a nominally different combination of prior art and considering that Petitioner presents the same arguments as were meritoriously overcome by the Applicant during prosecution, based on our evaluation of the non-exclusive factors above, we are persuaded that exercising our discretion under 325(d) on this particular ground is appropriate.

D. Alleged Obviousness over Van Heugten

Petitioner contends that claims 18 and 22 are unpatentable over Van Heugten. Pet. 30–41.

1. Van Heugten (Ex. 1003)

Van Heugten is a U.S. Patent titled "Catheter with Controlled Valve." Ex. 1003, [54]. Van Heugten discloses a "catheter hub assembly . . . wherein the assembly contains a membrane useful in preventing backflow of

blood." *Id.* at [57]. To illustrate Van Heugten's catheter assembly, we reproduce Figure 2, below:

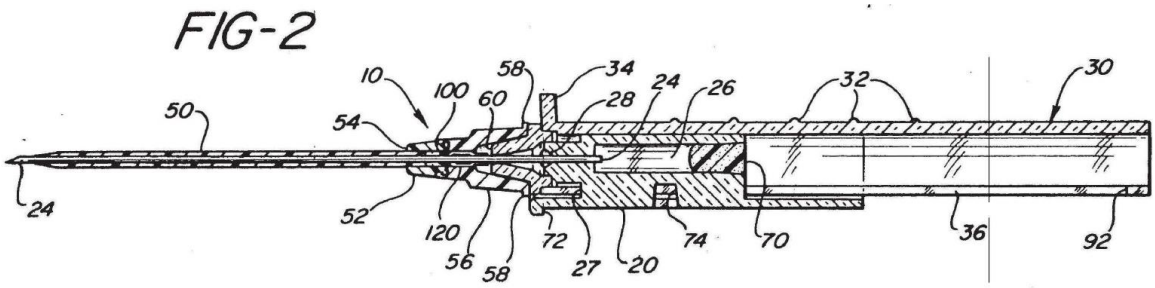

Figure 2 depicts a cross-sectional view of Van Heugten's catheter assembly 10. *Id.* at 2:9–10, 19—21. In particular, Figure 2 illustrates catheter assembly 10 with catheter 50 and needle 24, which needle guard 30 covers upon retraction of needle 24 to prevent inadvertent needle injury to the user or others. *See id.* at 2:36–39, 3:34–58. Catheter assembly 10 also includes valve membrane 110, which is illustrated in Figures 4a and 4b, which we also reproduce, below:

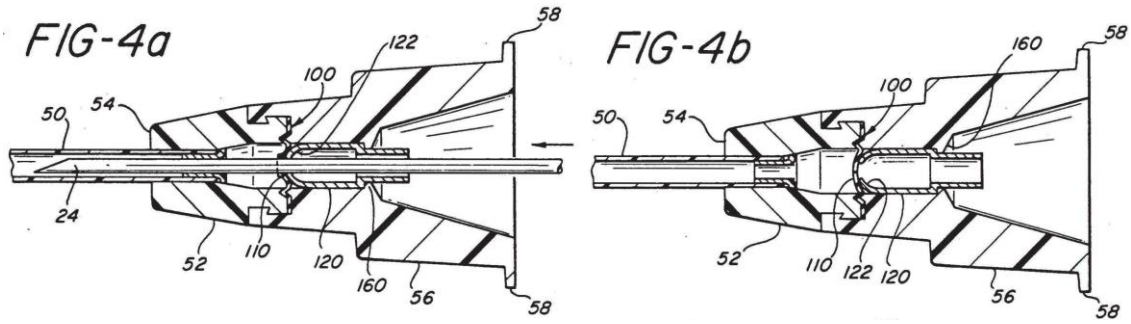

As disclosed in Van Heugten, Figures 4a and 4b further show membrane assembly 100 comprising a one-directional valve membrane 110. *Id.* at 3:59–64. Figure 4a (above-left) depicts membrane 110 as being "punctured" by needle 24 (*id.* at 3:59–4:3), while Figure 4b (above-right) depicts needle 24 removed, where upon "removal from the catheter hub 52, the valve membrane closes" (*id.* at 4:6–9). The sealed valve member 110 is "generally configured as a 'duck bill' valve or a valve of similar

configuration and smoothly allows removal of . . . needle 24[, so that upon] removal of the needle 24 from the catheter 50, the valve membrane unidirectionally closes so that blood will not flow into flash chamber 26." *Id.* at 4:23–30.

2. Petitioner's Challenge to Claims 18 and 22

Petitioner argues that Van Heugten teaches a "catheter insertion device" that meets all the method and step limitations of claims 18 and 22, including attaching catheter tube 50 to catheter hub 52. Pet. 31 (citing Ex. 1003, 2: 6–15, 45–55, Fig. 3). According to Petitioner, Van Heugten discloses also valve member 100, 110, and a valve actuating element 120 in catheter hub 52. *Id.* at 32–35 (citing Ex. 1003, 1:62–2:4, 3:59–4:3, 4:6–36, 43–49, Figs. 3, 4a–4c; Ex. 1002 ¶¶ 95–96). Further, Petitioner asserts that Van Heugten discloses aligning needle guard 30 in-line with the catheter hub, and that the valve closes, and remains inside the catheter hub, when the needle is removed from the catheter tube and hub. *Id.* at 37–39 (citing Ex. 1003, 1:60–2:4, 2:19–23, 2:36–40, 2:56–62, 3:59–4:3, 4:6–30, Figs. 1, 2, 3, 4a–4b; 1002 ¶¶ 100–102).

With respect to claim 22, Petitioner contends that Van Heugten's "opener 120 is generally cylindrical in shape and contains nose-shaped opening means 122" such that is essentially "truncated cone-shaped." *Id.* at 39–40 (citing Ex. 1003, 1:62–2:4, 4:31–36, 4:43–49, Fig. 4c; Ex. 1002 ¶¶ 103–105).

3. Patent Owner's Argument

Patent Owner asserts that "Van Heugten does not disclose a needle protective device (needle guard element) in-line with its catheter hub." Prelim. Resp. 44. Patent Owner provides the following annotated Figure 2

from Van Heugten, ostensibly illustrating that the needle guard is not in-line with the catheter hub.

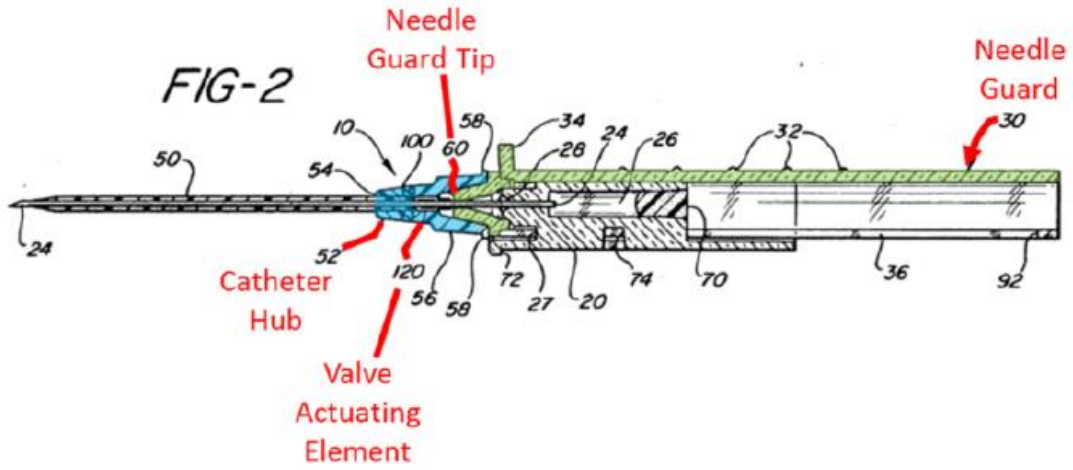

Figure 2 of the catheter hub assembly from Van Heugten, above, and as annotated by Patent owner, illustrates in green a portion of the needle guard and, in blue, the catheter hub.

4. Analysis

Contrary to Patent Owner's argument, our review of Van Heugten's Figures 1 and 2, is mostly consistent with Petitioner's analysis, and reveals that the needle guard is "in-line" with the catheter hub and the valve actuation element as called for in claim 18, as needle guard 30 is "oriented along the same axis" as catheter hub 52 and valve actuating element 120. *See* Pet. 37. For one thing, the green color indicative of the needle guard in Patent Owner's annotated figure 2 above does not appear to illustrate the entire needle guard, which is better seen in Figure 1, as essentially a cylinder with slot 36. Moreover, even from Figure 2 the needle guard tip 60 is reasonably understood as in-line with the catheter hub and valve actuating element 120, for instance as illustrated by needle 24 passing centrally through each of these elements. Ex. 1003, 2:56–61. In addition, the claim

does not specify what "in-line" means exactly, and Patent Owner does not expressly propose an interpretation that may be different from Petitioner's. *See, e.g.*, Prelim. Resp. 5–18. Patent Owner's argument, as they refer to Figures 1 and 2 of the '762 patent itself, seems to infer that the needle guard must have a center of mass that is *co-linear* with the catheter hub and valve actuating element, and due to the presence of slot 36, needle guard 30 is not perfectly cylindrical, and not "in-line" with catheter hub 52 and valve actuating element 120. *See, e.g.*, Prelim. Resp. 46 ("needle guard 30 is off-center, being located above the needle hub 20, so it is not in-line with the catheter hub 52"). At this stage of the proceeding, we do not find this argument to be commensurate in scope with the claim. We are persuaded for purposes of institution, that a person of ordinary skill in the art, considering even for instance the green highlighting in Petitioner's annotated figure 2 above, would reasonably understand that at least needle guard tip 60 of needle guard 30 is "in-line" with hub 52 and valve actuating element 120.

In addition, Van Heugten's valve actuating element 120 appears, as we observe in Figures 4a-b above, essentially as a hollow cylinder having a truncated cone-shaped nose 122 for opening the valve.

We are persuaded on this record that Petitioner has shown a reasonable likelihood that claims 18 and 22 would have been obvious in view of Van Heugten.

E. Alleged Obviousness over Van Heugten and Lynn

Petitioner contends that claim 25 is unpatentable over Van Heugten and Lynn. Pet. 41–45.

1. Lynn (Ex. 1010)

Lynn discloses vascular access system 5 including needle hub 75 supporting needle 60 "within a needle receptacle 84, which includes an enclosed proximal end 95 and defines a receptacle chamber 100 for receiving the retracted needle." Ex. 1010, 7:16–18. Lynn teaches a retraction spring mechanism for retracting needle 60 into receptacle chamber 100 to protect from inadvertent needle sticks. *Id.* at 2:16–20, 7:18–26. The sole Figure from Lynn is reproduced below.

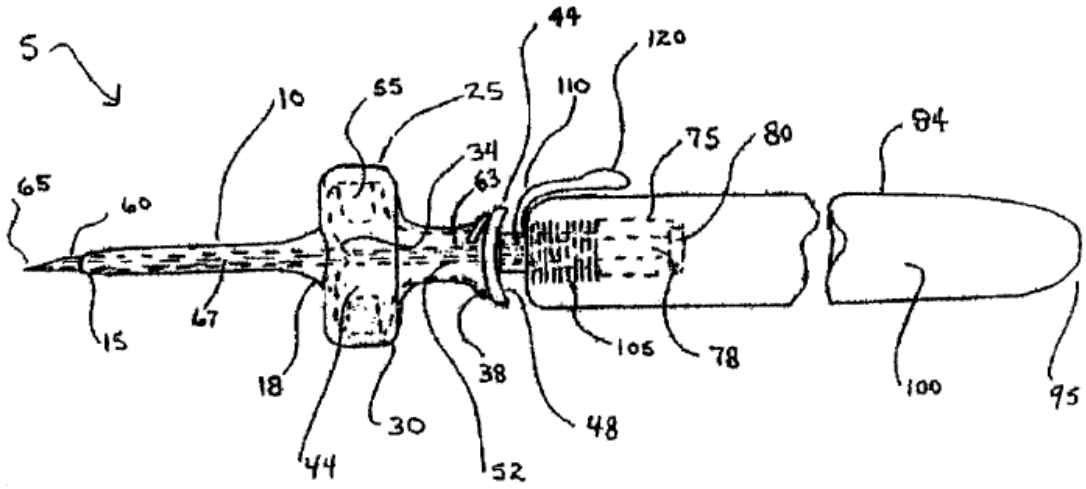

The sole Figure from Lynn, above, depicts vascular access system 5 including a needle protective device (needle receptacle 84) for receiving spring biased needle 60. According to Lynn, when a user depresses button 120, spring 105 is released from a compressed state retracting needle 60 into receptacle chamber 100. *Id.* at 7:15–26.

2. Petitioner's Challenge to claim 25

Petitioner argues that replacing the manual linear force necessary to retract the needle into the needle protective device in Van Heugten is simply automated by Lynn with its needle retraction spring mechanism. Pet. 42. Petitioner asserts that the benefits of automating this retraction function were

known in the art, as discussed for example by Cuppy (Ex. 1011), which explains that a danger with manual retraction is that "people forget to fully retract the needle into the locked position allowing the needle to slip out of safety tube and again risking a needle stick or puncture of [] the disposal receptacle." *Id.* at 44 (citing Ex. 1011, 2:52–58). Petitioner contends further that one of ordinary skill in the art would understand Van Huegten and Lynn to be a "combination of known elements to function for their intended result . . . and would have found this to be a predictable solution." *Id.* at 45 (citing Ex. 1002 ¶ 120).

3. Patent Owner's Argument

Patent Owner argues that "nowhere does Petitioner or Petitioner's expert ever explain how the Van Heugten device could be modified to include Lynn's spring/trigger based mechanism." Prelim. Resp. 50. Patent Owner contends further that "Petitioner fails to illustrate even one way the spring mechanism of Lynn could be successfully incorporated into the Van Heugten device. *Id.*

4. Analysis

Patent Owner is correct that Petitioner does not provide a specific example explaining how Van Heugten and Lynn would be structurally combined as a single device. However, Petitioner's argument that the metal spring and button taught by Lynn could be simply incorporated into Van Heugten by a person of ordinary skill as a combination of known elements working according to their proscribed function has some merit. Pet. 45. Patent Owner's argument in this regard would require "absolute predictability," which is "an incorrect legal standard for obviousness." *Soft Gel Techs. v. Jarrow Formulas, Inc.*, 864 F.3d 1334, 1341 (Fed. Cir. 2017)

(citing Noelle v. Lederman, 355 F.3d 1343, 1352 (Fed. Cir. 2004)); *see also Hoffman La Roche Inc. v. Apotex, Inc.*, 748 F.3d 1326, 1331 (Fed. Cir. 2014) ("Conclusive proof of efficacy is not necessary to show obviousness. All that is required is a reasonable expectation of success."). We are apprised of no reason, on the record before us, that the mechanical actuation and positioning of a spring and button for automatically retracting a needle as described in Lynn, would not function in Van Heugten. Petitioner has shown sufficiently that the limitations of claim 25 would have been obvious over Van Heugten and Lynn, as we see no reason why the proposed modification is more than the predictable use of prior art elements according to their established functions.

F. Alleged Obviousness over Van Heugten and Tauschinski

Petitioner argues that dependent claim 22 is obvious in view of Van Heguten as combined with Tauschinski which, Petitioner contends, teaches a valve actuating element that is hollow and has a truncated cone-shape end portion. Pet. 46–48 (citing Ex. 1002 ¶¶ 123–138, Ex. 1005, 3:25–29, Figs, 2–3). Patent Owner does not substantively contest that the combination of Van Heugten and Tauschinski teaches each element of claim 22. Instead, Patent Owner argues that Petitioner has failed to provide articulated reasoning for the combination. Prelim. Resp. 51–52. Patent Owner argues that Petitioner's reasoning is based on the incorrect assessment by Mr. Griffis that Van Heughten discloses a slit valve. *Id.* at 52. Patent Owner points out that Van Heugten describes "a valve membrane (110) that is 'originally sealed before the needle 24 is inserted in the catheter 50,' and is 'punctured' upon insertion of the needle into the catheter assembly." Prelim. Resp. 52 (citing Ex. 1003, 3:59–4:3).

We note that neither claim 18 nor claim 22 recite a "slit" or a "slit valve." *See* Ex. 1001, 6:15–36, 54–57. More importantly, and with respect to Petitioner's asserted combination, Petitioner provides testimony from Mr. Griffis supporting the assertion that one of skill in the art "would understand that having a truncated cone shaped distal end section would facilitate entry of the actuator into the slit in the valve to actuate the valve." *See* Pet. 47, *see also* Ex. 1002 ¶ 136 (Mr. Griffis reliance on US. Pat. No. 3,585,996 to Reynolds, ("Reynolds '996") incorporated by reference in Van Heugten, for teaching "a self-sealing disc valve made of a relatively thick piece of rubber with several fine slits."). Patent Owner disagrees that Van Heugten teaches a slit valve, arguing on one hand that Reynolds '996 is simply background discussed in Van Heugten, and on the other hand, relying on Mr. Meyst to support the contention that Van Heugten's duckbill valve is not a slit valve. *See* Prelim. Resp. 52–53 (citing Ex. 2001 ¶ 75 (Patent Owner's declarant, Mr. Meyst testifies that ("'duck-bill' simply refers to a one-way valve that prevents backflow (as opposed to a slit valve that allows fluid flow in either direction) and is not required to have slits.").

It is not clear at this point that Reynolds' slit valve is merely background. Read in context, it can be reasonably understood that Van Heugten incorporates the Reynolds '996 valve structure and function into the disclosed catheter assembly:

> [i]t would be desirable to apply the valve principle of the '996 patent to a catheter assembly to enable the catheter to automatically open when an insertion needle is passed through the catheter, then automatically close when the needle is withdrawn from the catheter.

Ex. 1003, 1:47–51. Because the conflicting testimony from Mr. Griffis and Mr. Meyst creates a genuine issue of material fact, "such testimonial

evidence will be viewed in the light most favorable to the petitioner solely for purposes of deciding whether to institute *inter partes* review." 37 C.F.R. § 42.108(c). Petitioner has made a sufficient showing at this stage that a person of ordinary skill in the art would have understood Van Heugten as teaching a slit.

For purposes of institution, Petitioner articulates adequate reasons with rationale underpinnings to modify Van Heugten to include the frustoconical distal end of the valve actuating element described in Tauschinski. Pet. 47–48. Accordingly, Petitioner has shown evidence sufficient to establish a reasonable likelihood that claim 22 would have been obvious over Van Heugten and Tauschinski.

G. Secondary Considerations

Patent Owner asserts that in the event trial is instituted it will present secondary consideration evidence of the commercial success, long-felt need, copying, and failure by others. Prelim. Resp. 55. In the event that Patent Owner provides such evidence during trial, we agree with the general proposition that evidence of secondary considerations of non-obviousness, when present, must always be considered en route to a determination of obviousness. *In re Cyclobenzaprine Hydrochloride Extended-Release Capsule Patent Litig.*, 676 F.3d 1063, 1075-76 (Fed. Cir. 2012); *Stratoflex, Inc. v. Aeroquip Corp.*, 713 F.2d 1530, 1538-39 (Fed. Cir. 1983).

IV. SUMMARY

For the foregoing reasons, we determine that the information presented in the Petition establishes a reasonable likelihood that Petitioner would prevail on at least one alleged ground of unpatentability with respect to each of claims 18, 22, and 25 of the '762 patent.

The Board has not made a final determination on the patentability of any challenged claims.

V. ORDER

For the reasons given, it is

ORDERED that *inter partes* review of the '762 patent is hereby instituted as to claims 18, 22, and 25 on the following grounds.

1. Claims 18 and 22 as obvious over Van Heugten;
2. Claim 25 as obvious over Van Heugten and Lynn; and
3. Claim 22 as obvious over Van Heugten and Tauschinski;

FURTHER ORDERED that no ground other than those specifically granted above is authorized for the *inter partes* review; and

FURTHER ORDERED that pursuant to 35 U.S.C. § 314(c) and 37 C.F.R. § 42.4, notice is hereby given of the institution of a trial on the grounds of unpatentability authorized above; the trial commences on the entry date of this decision.

For PETITIONER:

Heather M. Petruzzi
Natalie Pous
David L. Cavanaugh
WILMER CUTLER PICKERING HALE AND DORR LLP
Heather.Petruzzi@wilmerhale.com
Natalie.Pous@wilmerhale.com
David.Cavanaugh@wilmerhale.com

PATENT OWNER:

Barry J. Schindler
Heath J. Briggs
Julie P. Bookbinder
Joshua L. Raskin
GREENBERG TRAURIG, LLP
SchindlerB@gtlaw.com
BriggsH@gtlaw.com
BookbinderJ@gtlaw.com
RaskinJ@gtlaw.com